V_{RM} (V)	I_F (AV) (A) Values in parentheses are for the products with heatsinks	Package Axial (Body Diameter/Lead Diameter)	Part Number	I_{FSM} (A) 50Hz Single Half Sine Wave	T_j (°C)	T_{stg} (°C)	V_F (V) max	I_F (A)	I_R (μA) $V_R=V_{RM}$ max	I_R(H) (μA) $V_R=V_{RM}$ max	T_j (°C)	trr① (μs)	I_F/I_{RP} (mA)	trr② (μs)	I_F/I_{RP} (mA)	Rth(j-l) Rth(j-c) (°C/W)	Mass (g)
800	0.25	Axial(ϕ4.0/ϕ0.78)	RU 1B	15	-40 to +150		2.5	0.25	10	200	100(Ta)	0.4	10/10	0.18	10/20	15	0.4
	0.6	Axial(ϕ4.0/ϕ0.78)	RF 1B	15	-40 to +150		2.0	1.0	10	200	100	0.4	10/10	0.18	10/20	15	0.4
	0.6	Axial(ϕ4.0/ϕ0.78)	RH 1B	35	-40 to +150		1.3	0.6	5.0	70	150(Ta)	4.0	10/10	1.3	10/20	15	0.4
	0.7	Axial(ϕ4.0/ϕ0.78)	RS 1B	30	-40 to +150		2.5	0.8	10	2000	150	1.5	10/10	0.6	10/20	15	0.4
	1.0	Axial(ϕ4.0/ϕ0.78)	RU 2B	20	-40 to +150		1.5	1.0	10	300	100	0.4	10/10	0.18	10/20	15	0.4
	1.1	Axial(ϕ4.0/ϕ0.98)	RU 3B	20	-40 to +150		1.5	1.0	10	400	100	0.4	10/10	0.18	10/20	12	0.6
	1.5(3.0)	Axial(ϕ6.5/ϕ1.4)	RU 4B	50	-40 to +150		1.6	3.0	10	500	100(Ta)	0.4	10/10	0.18	10/20	8.0	1.2
1000	0.2	Axial(ϕ4.0/ϕ0.78)	RU 1C	15	-40 to +150		3.0	0.25	10	250	100	0.4	10/10	0.18	10/20	15	0.4
	0.6	Axial(ϕ4.0/ϕ0.78)	RH 1C	35	-40 to +150		1.3	0.6	5.0	70	150(Ta)	4.0	10/10	1.3	10/20	15	0.4
	0.8	Axial(ϕ4.0/ϕ0.78)	RU 2C	20	-40 to +150		1.5	1.0	10	300	100(Ta)	0.4	10/10	0.18	10/20	15	0.4
	1.5	Axial(ϕ4.0/ϕ0.98)	RU 3C	20	-40 to +150		2.5	1.5	10	400	100	0.4	10/10	0.18	10/20	12	0.6
	1.5(2.5)	Axial(ϕ6.5/ϕ1.4)	RU 4C	50	-40 to +150		1.6	3.0	50	500	100	0.4	100/100	0.18	100/200	8.0	1.2
1300	1.5	Axial(ϕ6.5/ϕ1.4)	RU 4D	50	-40 to +150		1.8	1.5	50	500	100	0.4	500/500	0.18	500/1000	8.0	1.2
	1.5(2.5)	Axial(ϕ6.5/ϕ1.4)	RU 4DS	50	-40 to +150		1.6	3.0	10	500	100	0.4	500/500	0.18	500/1000	8.0	1.2
1500	0.5	Axial(ϕ2.7/ϕ0.6)	ES01F	15	-40 to +150		2.0	0.5	10	200	100(Ta)	1.5	10/10	0.6	10/20	20	0.2
	0.5	Axial(ϕ2.7/ϕ0.78)	ES 1F	20	-40 to +150		2.0	0.5	10	200	100(Ta)	1.5	10/10	0.6	10/20	17	0.3
	1.5(2.5)	Axial(ϕ6.5/ϕ1.4)	RS 4FS	50	-40 to +150		1.5	3.0	50	500	100	1.0	100/100	0.4	100/200	8.0	1.2
2000	0.2	Axial(ϕ4.0/ϕ0.78)	RC 2	20	-40 to +150		2.0	0.2	10	300	100	4.0	10/10	1.3	10/20	15	0.4

Not Recommended for New Designs

• No. 13 Axial (ϕ4.0/ϕ0.78)

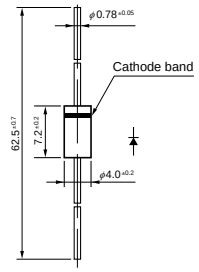

• No. 14 Axial (ϕ4.0/ϕ0.98)

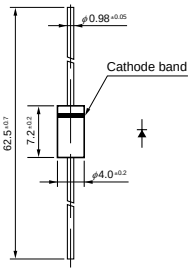

• No. 15 Axial (ϕ6.5/ϕ1.4)

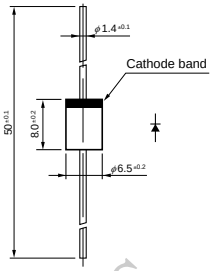

• No. 16 TO-220F (Two Elements)

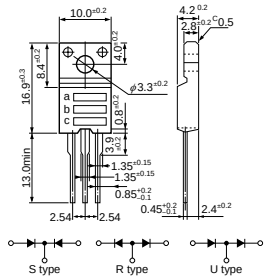

a: Part Number
b: Polarity
c: Lot No.

• No. 17 TO-220F (Center-tap)

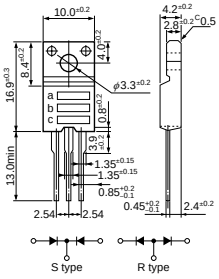

a: Part Number
b: Polarity
c: Lot No.

• No. 18 TO-220F2Pin

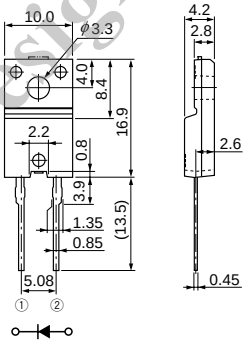

• No. 19 TO-220F2Pin (Two Elements)

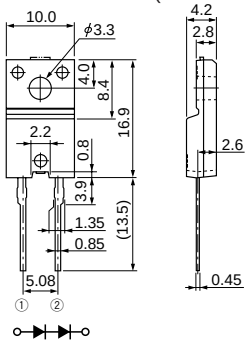

• No. 20 TO-3PF

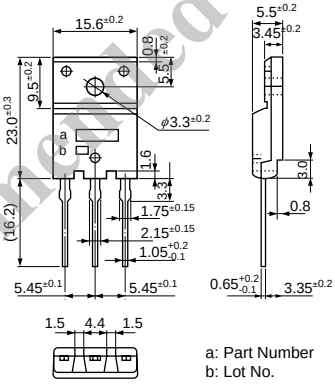

a: Part Number
b: Lot No.

• No. 21 TO-3PF2Pin

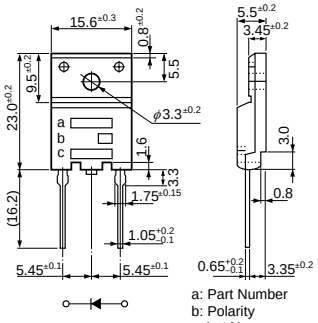

a: Part Number
b: Polarity
c: Lot No.

Not Recommended for New Designs