RN-131G & RN-131C 802.11 b/g Wireless LAN Module

Features

- Qualified 2.4-GHz IEEE 802.11b/g transceiver
- Ultra-low power: 4 uA sleep, 40 mA Rx, 210 mA Tx
- High throughput, 1 Mbps sustained data rate with TCP/IP and WPA2
- Small, compact surface-mount module
- On-board ceramic chip antenna and U.FL connector for external antenna
- 8-Mbit flash memory and 128-KB RAM
- UART hardware interface
- 10 general-purpose digital I/O pins
- 8 analog sensor interfaces
- Real-time clock for wakeup and time stamping
- Accepts 3.3-V regulated or 2 to 3 V battery
- Supports ad hoc and infrastructure networking modes
- On board ECOS -OS, TCP/IP stacks
- Wi-Fi Alliance certified for WPA2-PSK
- FCC/CE/ICS certified and RoHS compliant.
- Industrial (RN-131G) and commercial (RN-131C) grade temperature options

Applications

- Remote equipment monitoring
- Telemetry
- Industrial sensors and home automation controls
- Medical device monitoring



Description

The RN-131 module is a standalone, embedded wireless 802.11 b/g networking module. With its small form factor and extremely low power consumption, the RN-131 is perfect for mobile wireless applications such as asset monitoring, GPS tracking, and battery sensors. The WiFly module incorporates a 2.4-GHz radio, processor, TCP/IP stack, real-time clock, crypto accelerator, power management, and analog sensor interfaces as shown in Figure 1. The module is preloaded with software to simplify integration and minimize application development. In the simplest configuration, the hardware requires only four connections (PWR, TX, RX, and GND) to create a wireless data connection. Additionally, the sensor interface provides temperature, audio, motion, acceleration, and other analog data without requiring additional hardware. The module is programmed and controlled with a simple ASCII command language. Once the module is set up, it can scan to find an access point, associate, authenticate, and connect over any Wi-Fi network.

Figure 1. RN-131 Block Diagram

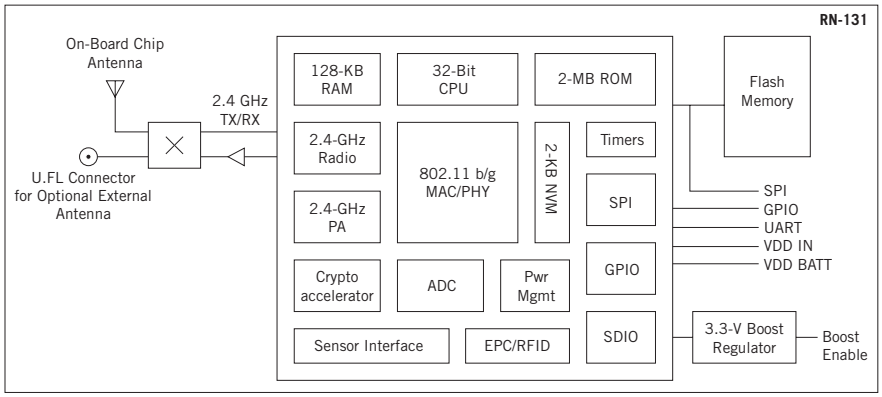

OVERVIEW

- Host data rate up to 1 Mbps for the UART
- Intelligent, built-in power management with programmable wakeup
- Real-time clock for time stamping, auto-sleep, and auto-wakeup
- Configuration over UART using simple ASCII commands
- Remote configuration over WiFi using Telnet
- Supports over the air firmware upgrade (FTP)
- Supports WPS pushbutton mode for easy association with access points
- Secure WiFi authentication using WEP-128, WPA-PSK (TKIP), or WPA2-PSK (AES)
- Built-in networking applications—DHCP, UDP, DNS, ARP, ICMP, TCP, HTTP client, and FTP client
- 802.11 power saving and roaming functions

The modules size and weight are:

- *Size*—1.49" x 0.78" x 0.15" (37mm x 20 mm x 3.5 mm)
- *Weight*—0.140 oz

Tables 1 through 4 provide detailed specifications for the module.

Table 1. Environmental Conditions

Parameter	RN-131G	RN-131C
Temperature Range (Operating)	-30 °C to +85 °C	0 °C to +70 °C
Temperature Range (Storage)	-40°C to +85 °C	-40°C o +85 °C
Relative Humidity (Operating)	≤ 90%	≤ 90%
Relative Humidity (Storage)	≤ 90%	≤ 90%

Table 2. Electrical Characteristics

Supply Voltage	Min	Typ.	Max.	Unit
Supply voltage VDD	3.0	3.3	3.7	VDC
Supply voltage (VBATT option)	2.0	3.0	3.3	VDC
Pin 21 switched 3.3 V output			150	mA
Digital input				
Input logic high VIH	2.3 V			VDC
Input logic low VIL			1.0 V	VDC
Digital output drive				
GPIO 4, 5, 6, 7, 8		24		mA
GPIO 9, 10, 11, 12, 13		8		mA
Power consumption				
Sleep		4		uA
Standby (doze)	-	15	-	mA
Connected (idle, RX)		40		mA
Connected (TX)		140	212	mA

Table 3. Analog Sensor Inputs

Parameter	Value
Sense 0,1,2,3 wakeup detect threshold	500 mV
AD sense 0 - 7 measurement range	0 - 400 mV
Precision	14 bits = 12 uV
Accuracy	5% un-calibrated, 0.01% calibrated
Minimum conversion time	35uS (5kHz over Wi-Fi)
Sensor Power (pin 33) output resistance 3.3 V	10 ohms, max current = 50 mA

Table 4. Radio Characteristics

Parameter	Specifications
Frequency	2,402 to 2,480 MHz
Modulation	802.11b compatibility: DSSS (CCK-11, CCK-5.5, DQPSK-2, DBPSK-1) 802.11g: OFDM (default)
Channel intervals	5 MHz
Channels	1 - 14
Transmission rate (over the air)	1 – 11 Mbps for 802.11b / 6 – 54 Mbps for 802.11g
Receive sensitivity	-85 dBm typ.
Output level (class 1)	+18 dBm
Maximum RF input to U.FL connector	10 dBm

TYPICAL APPLICATION SCHEMATIC

Figure 2 shows a typical application schematic.

Figure 2. Application Schematic

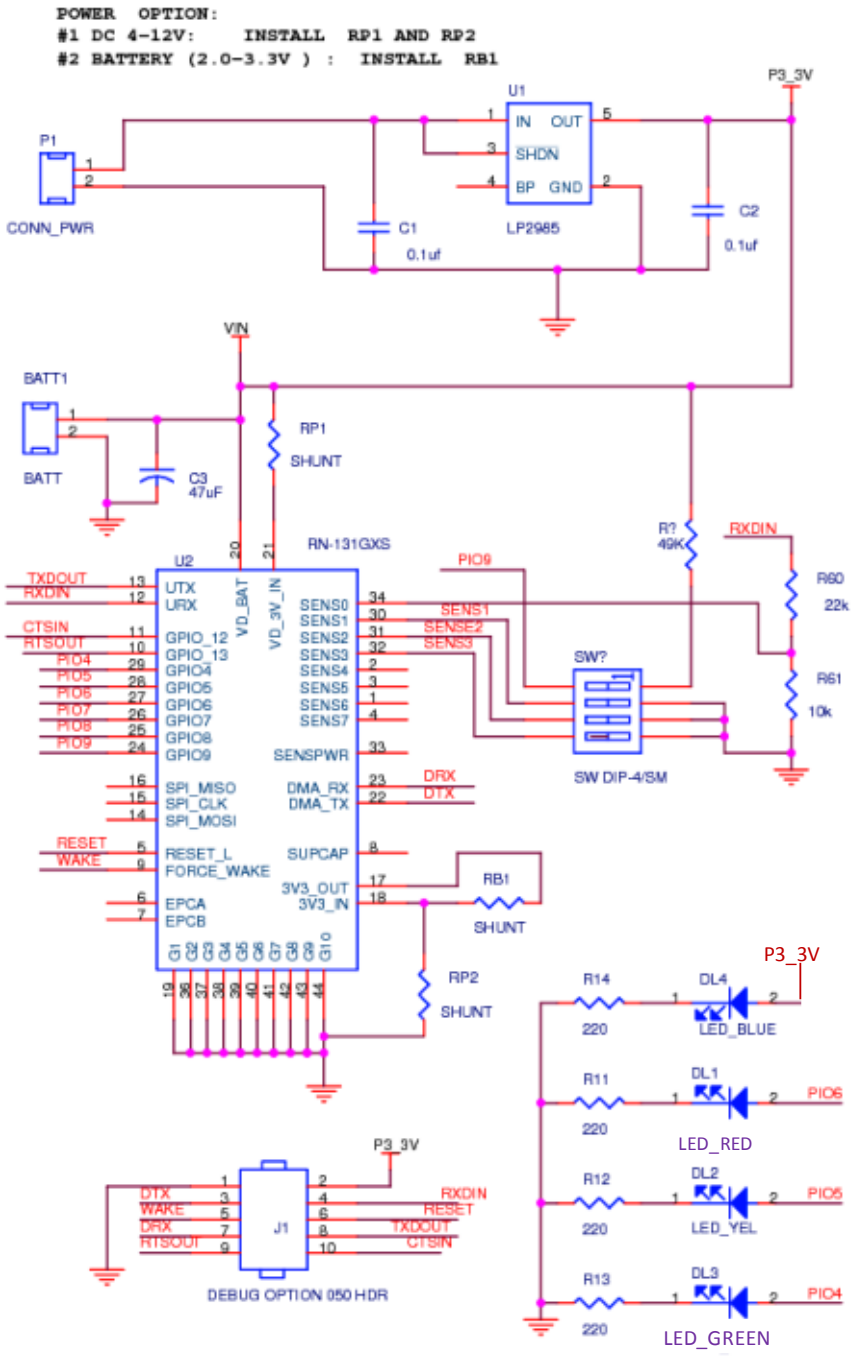

Figure 3 shows the pin pads and Table 5 describes the pins.

Figure 3. Pin Pads

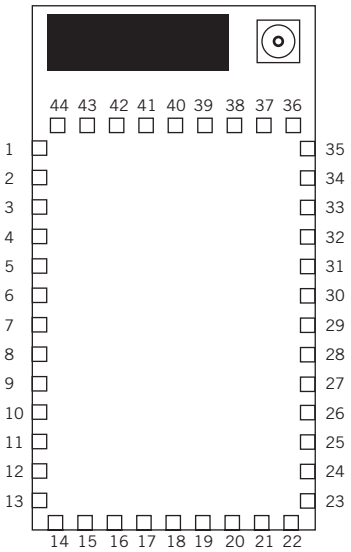

Top View
(Pads Not Visible from Top)

Table 5. Pin Description

Pin	Name	Description	Default
1	SENSOR 6	Sensor interface, analog input to module, 1.2 V.	No connect
2	SENSOR 4	Sensor interface, Analog input to module, 1.2 V.	No connect
3	SENSOR 5	Sensor interface, Analog input to module, 1.2 V.	No connect
4	SENSOR 7	Analog input to module, 1.2 V.	No connect
5	RESET	Module reset, active low, reference to VDD-BATT, 160 usec pulse.	Pull up
6	EPC-ANT-A	EPC port, RFID antenna A.	No connect
7	EPC-ANT-B	EPC port, RFID antenna B.	No connect
8	SUPERCAP	Balance center pin voltage on stacked super capacitors, analog 3.3 V.	No connect
9	FORCE_AWAKE	Force the module to wakeup, input to module, 250 us min. pulse.3.3 V.	–
10	GPIO-13	UART RTS flow control, 8-mA drive, 3.3-V tolerant.	–
11	GPIO-12	UART CTS flow control, 8-mA drive, 3.3-V tolerant.	–
12	UART-RX	INPUT: RX in to the module, 3.3-V tolerant.	–
13	UART-TX	OUTPUT: TX out from the module, 8-mA drive, 3.3-V tolerant.	–
14	Not used	Not applicable	No connect
15	Not used	Not applicable	No connect
16	Not used	Not applicable	No connect
17	3.3V-REG-OUT	Boost regulator control output, connect to 3.3V-REG-IN to enable.	No connect
18	3.3V-REG-IN	Boost regulator control input, connect to 3.3V-REG-OUT to enable.	GND to disable
19	GND	Ground.	–
20	VDD-BATT	Battery input. 2.0 to 3.3 V with boost regulator in use, otherwise use 3.0 to 3.7 V.	–
21	VDD-IN	3.3 to 3.7 voltage. Do not connect when boost regulator is in use.	–

Pin	Name	Description	Default
22	DMA-TX	Debug port (apply a 100 kΩ pull down if ultra-low sleep power is required)	High Z
23	DMA-RX	Debug port	No connect
24	GPIO-9	Restore factory resets/enter ad hoc mode, 8-mA drive, 3.3-V tolerant.	Input
25	GPIO-8	GPIO, 24-mA drive, 3.3-V tolerant.	GP output
26	GPIO-7	GPIO, 24-mA drive, 3.3-V tolerant.	GP output
27	GPIO-6	Association STATUS, 24-mA drive, 3.3-V tolerant.	LED_RED output
28	GPIO-5	Data transfer STATUS, 24-mA drive, 3.3-V tolerant.	LED_YELLOW output
29	GPIO-4	Connection STATUS, 24-mA drive, 3.3-V tolerant.	LED_GREEN output
30	SENSOR-1	Sensor interface, analog input to module, 1.2 V.	–
31	SENSOR-2	Sensor interface, analog input to module, 1.2 V.	–
32	SENSOR-3	Sensor interface, analog input to module, 1.2 V.	–
33	SENSE-PWR	Voltage output from module to power external sensors, 3.3 V.	–
34	SENSOR-0	Wakeup from external condition.	–
35	NO CONNECT	–	No connect
36-44	GND	Must be connected for proper antenna performance.	–

Figure 4 shows the module's physical dimensions. Figure 5 shows the pad dimensions.

Figure 4. Module Physical Dimensions

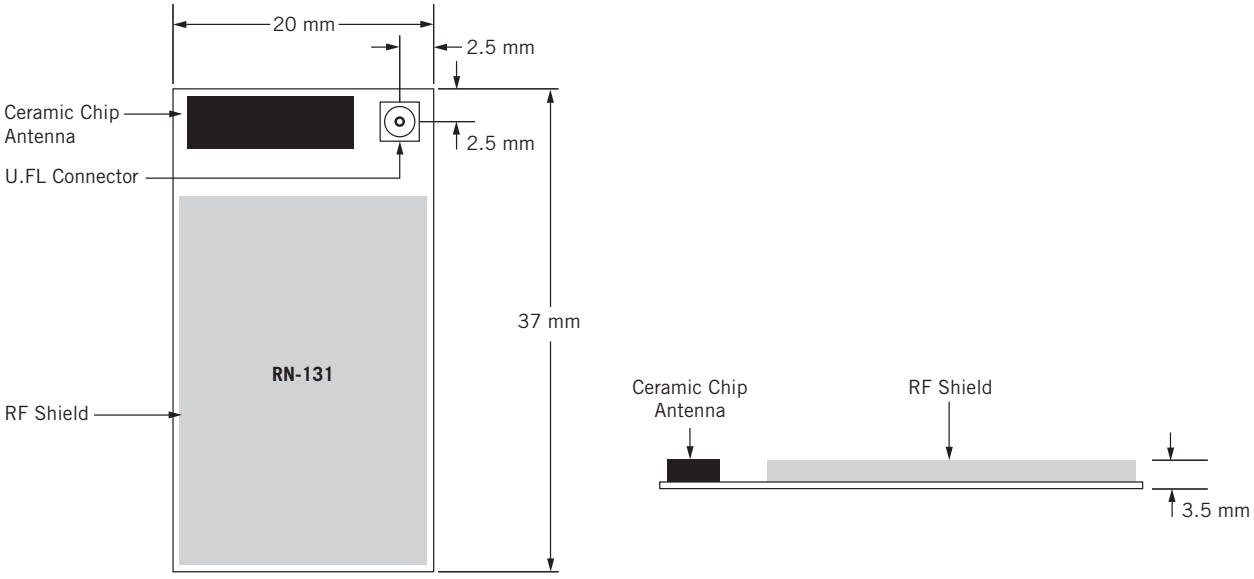

Figure 5. Pad Dimensions

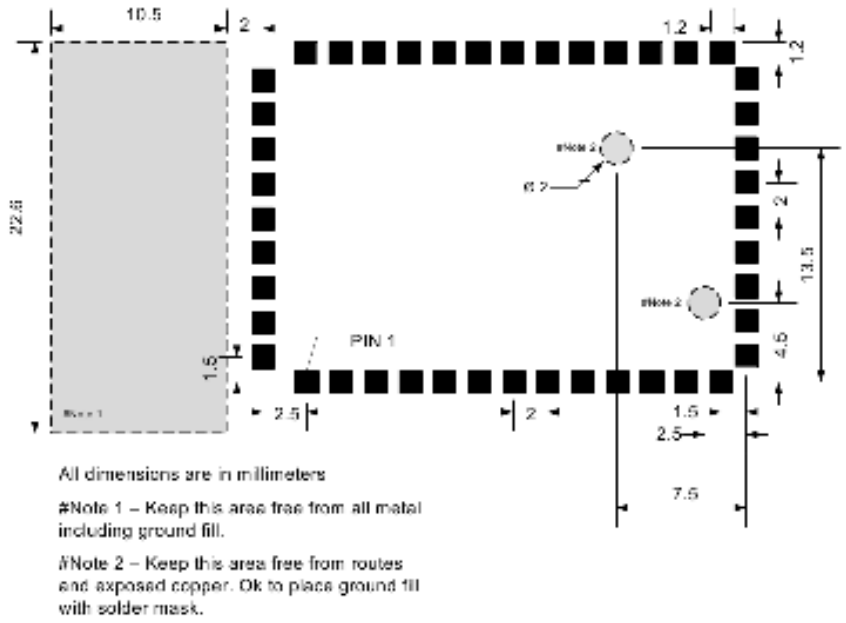

DESIGN CONCERNS

The following sections provide information on designing with the RN-131 module, including radio interference, grounding, solder reflow, connection status, etc.

Minimizing Radio Interference

When integrating the WiFly module with the on-board chip antenna, ensure that the area around the chip antenna end of the module protrudes at least 6 mm from the motherboard and any metal enclosure. If this placement is not possible, use the on-board U.FL connector to route to an external antenna.

The 8.5-mm area under the module's antenna end should be kept clear of metallic components, connectors, vias, traces, and other materials that can interfere with the radio signal. See Figure 6.

Figure 6. Antenna Clearance

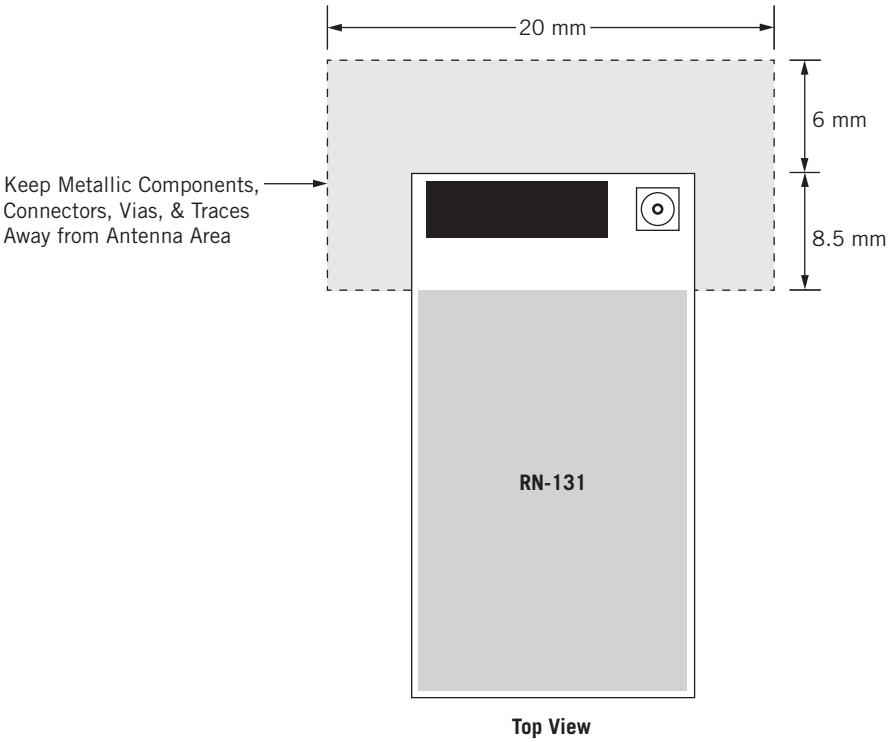

Grounding Recommendations

For the module antenna to function, pins 36 through 44 must be connected to ground. Roving Networks suggests you place the module such that 0.5 mm of theses pads is exposed. This placement provides access for soldering pins 36 through 44 from below, and provides ample clearance of the antenna from the PCB. See Figure 7.

Figure 7. Module Placement for Grounding

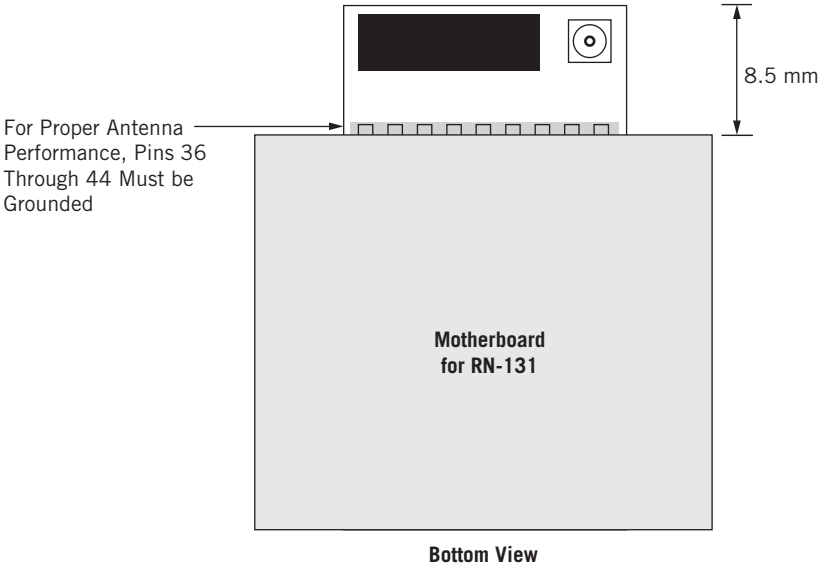

Solder Reflow

The solder reflow temperature must not exceed 220° C. To reflow solder the module onto a PCB, Roving Networks recommends an RoHS-compliant solder paste equivalent to NIHON ALMIT paste or OMNIX OM-310 solder paste from Alpha metals. See Table 6.

NOTE: Use no-clean flux and DO NOT water wash.

Table 6. Paste Solder Recommendations

Manufacturer	Alpha Metals http://www.alphametals.com	NIHON ALMIT Co. LTD http://almit.co.jp
Part Number	OMNIX OM-310	LFM-70W INP
Metal Composition	SAC305 (96.5% Sn, 3% Ag, 0.5% Cu)	88% Sn, 3.5% Ag, 0.5% Bi, 8% In
Liquidus Temperature	~220°C	~215°C

Figures 8 and 9 show the solder reflow temperature profiles.

Figure 8. Solder Reflow Temperature Profile

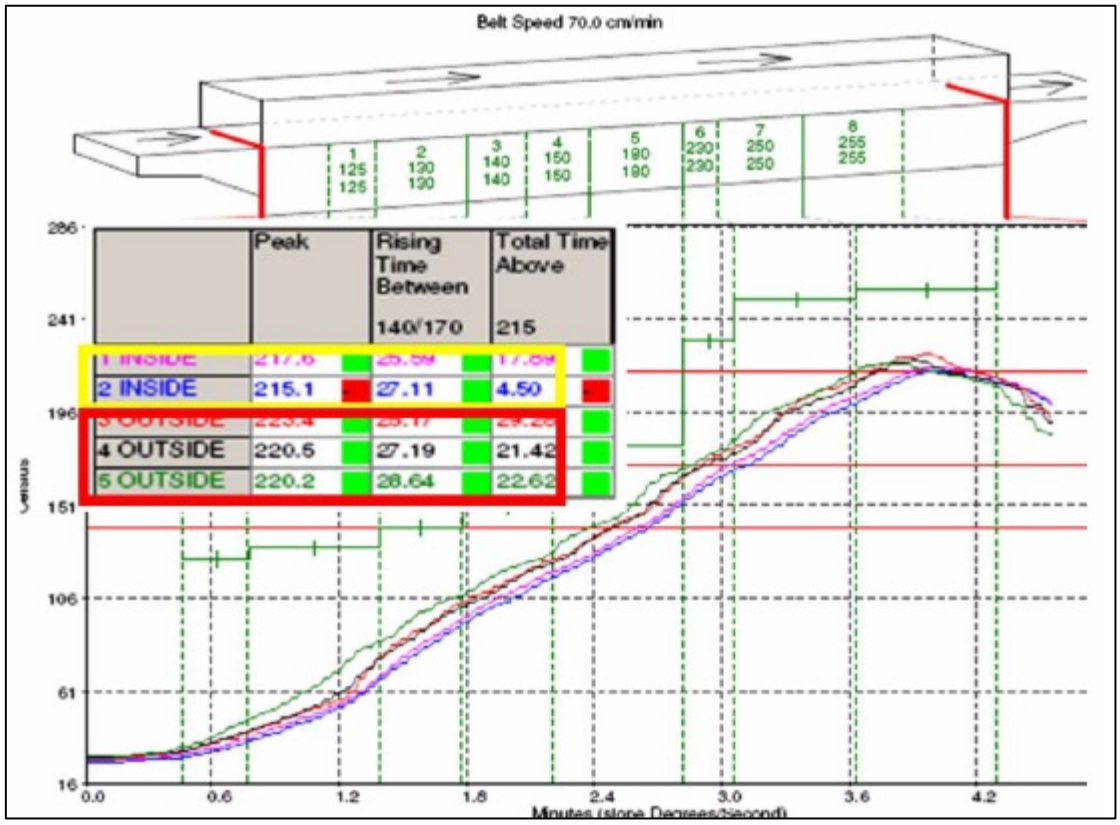

Figure 9. Solder Reflow Curve

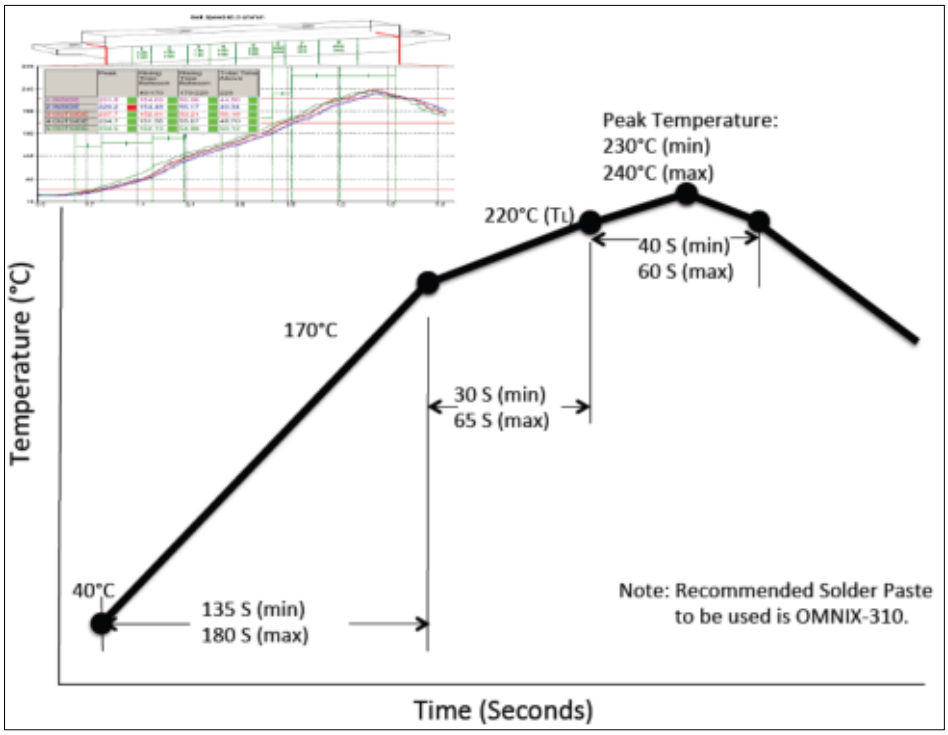

U.FL Connector

Roving Networks recommends that you use the Hirose U.FL connector (part number U.FL-R-SMT) for connecting external antennas. If you prefer to use the SMA connector, use the Roving Networks U.FL-to-SMA cable (part number RN-UFLSMA6). Figure 10 shows the U.FL connector dimensions.

Figure 10. U.FL Connector Dimensions

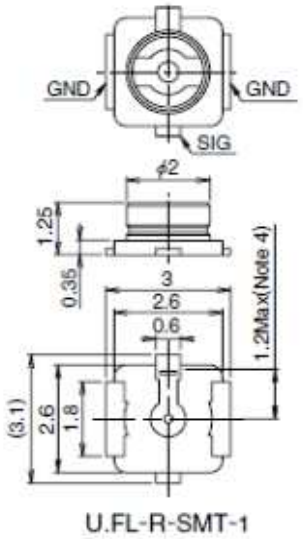

Connection Status

GPIO4, GPIO5, and GPIO6 drive status the LEDs.

- GPIO4 indicates the TCP/IP connection status. This signal is on high for an active connection, toggles fast to indicate no IP address, and toggles slowly to indicate that the IP address is OK but not connected.
- GPIO6 indicates the association status. High means the module is not associated with a network, off indicates that it is associated and Internet access is OK.
- GPIO5 toggles when data is transferred.

Keep-Out Areas

When designing your PCB avoid exposed traces and vias beneath the module. Figure 11 shows areas on the module that should be kept clear.

Figure 11. Keep Out Areas

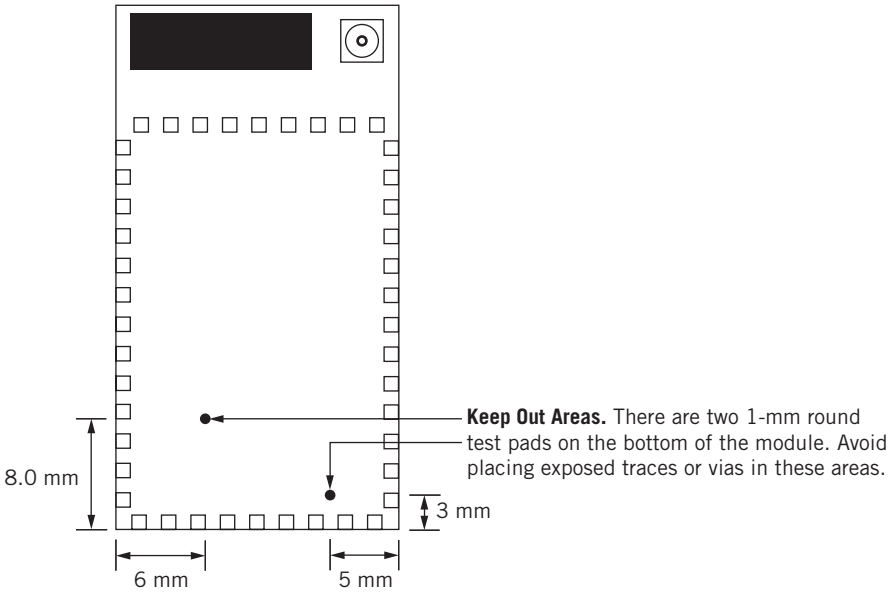

Powering the Module

The module can be powered from either 3.0-V DC batteries or 3.3-V DC regulated power.

For 3.0-V DC battery power:

- Apply power to pin 20 (VDD-BATT).
- Short pin 17 (3.3 V REG-OUT) to pin 18 (3.3 V REG-IN) (battery boost mode).
- 150 mA of current at 3.3 V is available for external devices on pin 21 when the module is in battery boost mode.

For 3.3-V DC power:

- Apply power to pin 20 (VDD-BATT) and pin 21 (VDD-IN).
- Connect pin 18 (3.3 V REG-IN) to ground and leave pin 17 (3.3 V REG-OUT) unconnected.

Reset (Pin 5)

The RESET signal is used to reset the module and is active low. This pin has a built-in 100-kΩ pull up resistor. You do not need to connect this; it can be left unconnected. To reset the module, apply a 3.3-V pulse for a minimum of 160 us.

Force Awake (Pin 9)

This signal forces the module to wake up from sleep. FORCE_AWAKE is an active-high signal. To wake the module, apply a 3.3-V pulse for a minimum of 250 us.

Achieving Lowest Power in Sleep Mode

To achieve the lowest power consumption (4 uA) in sleep mode, connect a weak pull-down (100 KΩ resistor to GND) on pin 22 (DMA-TX).

If GPIO8 through GPIO4 are being used to drive an output, connect a 100-kΩ pull-down resistor. Any unused (no connect) GPIO pins can be left floating.

- Pin 25: GPIO8
- Pin 26: GPIO7
- Pin 27: GPIO6
- Pin 28: GPIO5
- Pin 29: GPIO4

For other GPIO lines, you do not need to use a pull down. The module already has an on-chip internal pull down (80 kΩ);

The power consumption in sleep mode without these signals connected to a pull down is 655 uA.

Sensor Interfaces

Inputs must not exceed 1.2 V. The sensitivity saturates at 400 mV.

Ad Hoc Mode & Restoring Factory Settings

Ad hoc mode is controlled with GPIO9 (pin 24). Roving Networks recommends that you connect pin 24 to a switch or jumper connected to a pull up. When GPIO9 is driven high at power up, the module enters ad hoc mode. If GPIO9 is then toggled low 5 times, the module will be restored to it's initial factory default configuration. This feature is useful for cases where the module is misconfigured and is no long responding.

COMPLIANCE INFORMATION

The following sections describe the module's FCC and NCC compliance information.

FCC Compliance

This equipment has been tested and found to comply with the limits for a Class digital device, pursuant to Part 15 of the FCC rules. These limits are designed to provide reasonable protection against harmful interference in a residential installation. This equipment generates uses and can radiate radio frequency energy and, if not installed and used in accordance with the instructions, may cause harmful interference to the radio communications. However, there are no guarantees that interference will not occur in a particular installation.

Troubleshooting

If this equipment does cause harmful interference to radio or television reception, which can be determined by turning the equipment off and on, the user is encouraged to try to correct the interference by one or more of the following instructions

- Reorient or relocate the receiving antenna.
- Increase the separation between the equipment and receiver.
- Connect the equipment to an outlet or a circuit difference from that to which the receiver is connected.
- Consult the dealer or an experienced radio/TV technician.

Conditions

Operation is subject to the following conditions

- This device may not cause harmful interference.
- This device must accept any interference received, including interference that may cause undesired operation.

Markings

To satisfy the FCC exterior labeling requirements the following text must be placed on the exterior of the end product.

Contains Module FCC ID: U30-G2M5477

This marking applies to the G2M5477 and the RN-131 module, which are the same. Any similar working that expresses the same meaning may be used.

FCC Warning

Modifications

Modifications not expressly approved by the manufacturer could void the user's authority to operate the equipment under FCC rules. See Table 7.

Table 7. Radio Frequency Exposure

Property (Units Measured)	Value	Units
Antenna Gain	2.0	dBi
Numeric Gain	1.58	Numeric
Max Allowable Peak Power	+23.76	dBm
Max Allowable Peak Power	237.7	mW
Calculated Safe Distance at 1	5.5	mW/cm^2
Minimum Separation Distance	20	cm^3

This equipment has been evaluated in accordance with the FCC bulletin 56 “Hazards of radio frequency and electromagnetic fields” and Bulletin 65 “Human exposure to radio frequency and electromagnetic fields.”

A distance greater or equal to 20 cm from the device should be maintained for safe operation in an uncontrolled environment.

NCC (Taiwan Statement)

Contains Transmitter Module NCC ID: CCAF11LP0240T6

802.11b/802.11g/BT 警語：

第十二條→經型式認證合格之低功率射頻電機，非經許可，公司，商號或使用者均不得擅自變更頻率、加大功率或變更原設計之特性及功能。

第十四條→低功□射頻電機之使用□得影響飛航安全及干擾合法通信；經發現有干擾現象時，應□即停用，並改善至無干擾時方得繼續使用。

前項合法通信，指依電信法規定作業之無線電通信。 低功□射頻電機須忍受合法通信或工業、科學及醫□用電波□射性電機設備之干擾。

Unofficial Translation

Article 12
Without permission granted by the NCC, any company, enterprise, or user is not allowed to change frequency, enhance transmitting power or alter original characteristic as well as performance to an approved low power radio-frequency devices.

Article 14
The low power radio-frequency devices shall not influence aircraft security and interfere legal communications. If found, the user shall cease operating immediately until no interference is achieved.

The said legal communications means radio communications is operated in compliance with the Telecommunications Act.

The low power radio-frequency devices must be susceptible with the interference from legal communications or ISM radio wave radiated devices.

Table 8. Compliance Information

Specification	Compliance
FCC	ID U3O-G2M5477 Part 15.247
IC	(Canada) RSS-210
CE	EU ID # 0681
REG	U9M20901-1000-C
RADIO	EN 300328 V1.7.1 (10/2006)
EMC	EN 301489-1 V1.8.1 (04/2008), EN 301489-17 V1.3.2 (04/2008)
SAFETY	EN 60950-1:2001+A11:2004
RoHs	Compliant

ORDERING INFORMATION

Table 9 provides ordering information.

Table 9. Ordering Information

Part Number	Description
RN-131G	Industrial Temperature (-30 to + 85 C) With chip antenna and U.FL connector
RN-131C	Commercial Temperature (0 to + 70 C) With chip antenna and U.FL connector
RN-131G-EVAL	Development Kit for the RN-131G (Includes the RN-131G module)
RN-134	RN-131 Evaluation board, includes RS-232, LEDs, and power regulator. Sensor connections.
RN-SMA4-RP	4" external antenna with reverse polarity SMA connector. Used with RN-UFL-SMA6
RN-UFL-SMA6	6 inch cable with U.FL connector on one end and SMA on the other
For other configurations, contact Roving Networks directly.	

Go to http://www.rovingnetworks.com for current pricing and a list of distributors carrying Roving Networks products.

NOTES

Roving Networks, Inc.
102 Cooper Court
Los Gatos, CA 95032
+1 (408) 395-5300
www.rovingnetworks.com

Copyright © 2012 Roving Networks. All rights reserved. Roving Networks is a registered trademark of Roving Networks. Apple Inc., iPhone, iPad, iTunes, Made for iPhone are registered trademarks of Apple Computer.

Roving Networks reserves the right to make corrections, modifications, and other changes to its products, documentation and services at any time. Customers should obtain the latest relevant information before placing orders and should verify that such information is current and complete.

Roving Networks assumes no liability for applications assistance or customer's product design. Customers are responsible for their products and applications which use Roving Networks components. To minimize customer product risks, customers should provide adequate design and operating safeguards.

Roving Networks products are not authorized for use in safety-critical applications (such as life support) where a failure of the Roving Networks product would reasonably be expected to cause severe personal injury or death, unless officers of the parties have executed an agreement specifically governing such use.