Low Voltage 1A Voltage Regulator (LDO Regulator)

NO.EA-265-240401

OUTLINE

The RP132x is a voltage-regulator with a built-in low ON-resistance transistor and output current is 1A capability. This IC has two versions: fixed output voltage type and externally adjustable output voltage type. The minimum output voltage can be set from 1.4V. Otherwise, the load regulation of RP132x has much improved when compared with conventional regulators. It's Typ.5mV at I_{OUT}=0.1mA to 1A.

This IC consists of a voltage reference unit, an error amplifier, a resistor net for setting output voltage, current limit circuits to prevent over-current and a thermal-shutdown circuit. A standby mode with ultra low supply current can be realized with the chip enable function. Additionally, E/F Version with delay pin for inrush current limit time setting are also available.

The packages for these ICs are DFN(PL)1820-6, SOT-89-5, HSOP-6J and TO-252-5-P2. DFN(PL)1820-6 is suitable for high density mounting of the ICs on boards. SOT-89-5, HSOP-6J and TO-252-5-P2 are supporting high wattage.

FEATURES

- Output Current ····· Min. 1A
- Supply Current ····· Typ. 65μA
- Standby Current ····· Typ. 0.15μA
- Input Voltage Range ····· 1.4V to 6.5V
- Output Voltage Range ····· Fixed Output Voltage Type: 0.8V to 5.5V (0.1V steps)
  Adjustable Output Voltage Type: 0.8V to 5.5V
  (For other voltages, please refer to MARK INFORMATIONS.)
- Dropout Voltage ····· Typ. 0.52V (V_{OUT}=2.8V, I_{OUT}=1A)
- Ripple Rejection ····· Typ. 70dB (f=1kHz, V_{OUT}=2.8V)
- Output Voltage Accuracy ····· ±1.0%
- Output Voltage Temperature-Drift Coefficient ····· Typ. ±60ppm/°C
- Line Regulation ····· Typ. 0.052%/V
- Load Regulation ····· Typ. 3mV at I_{OUT}=300mA, Typ. 5mV at I_{OUT}=1A
- Packages ····· DFN(PL)1820-6, SOT-89-5, HSOP-6J,TO-252-5-P2
- Inrush Current Limit Circuit ····· Typ. 500mA
  B/D version: Inrush current limit time is 500μs.
  E/F version: Inrush current limit time is adjustable.
- Fold-Back Protection Circuit ····· Typ. 250mA (Current at short mode)
- Thermal Shutdown Circuit ····· Thermal Shutdown Temperature: Typ. 165°C
  Released Temperature: Typ. 95°C
- Auto Discharge Function ····· D, F version
- Ceramic capacitors are recommended to be used with this IC ···· 2.2μF or more (V_{OUT} ≤ 3.6V)
  4.7μF or more (V_{OUT} > 3.6V)

APPLICATIONS

- Power source for battery-powered equipment.
- Power source for portable communication equipment
- Power source for electrical appliances such as cameras, VCRs and camcorders.
- Power source for home appliances and Notebook PC.

SELECTION GUIDE

The output voltage, the auto discharge function[1], and the package type for the IC can be selected at the user's request.

Product Name	Package	Quantity per Reel	Pb Free	Halogen Free
RP132K001∗-TR	DFN(PL)1820-6	5,000 pcs	Yes	Yes
RP132Kxx1∗-TR				
RP132H001#-T1-FE	SOT-89-5	1,000 pcs	Yes	Yes
RP132Hxx1#-T1-FE				
RP132S001#-E2-FE	HSOP-6J	1,000 pcs	Yes	Yes
RP132Sxx1∗-E2-FE				
RP132J001#-T1-FE	TO-252-5-P2	3,000 pcs	Yes	Yes
RP132Jxx1#-T1-FE				

RP132x001x is the adjustable output voltage type.

xx: The output voltage can be designated in the range from 0.8V(08) to 5.5V(55) in 0.1V step.

The voltage in 0.05 V step is shown as follows:

Ex. 1.05 V : RP132x101x5

Contact our sales representatives for other voltages.

∗: The combination of the auto discharge function and delay pin (for setting inrush current limit time) are as follows.

B: without auto discharge function

D: with auto discharge function

E: without auto discharge function, with delay pin (for setting inrush current limit time)

F: with auto discharge function and delay pin (for setting inrush current limit time)

#: The auto discharge function at off state are options as follows.

B: without auto discharge function at off state

D: with auto discharge function at off state

[1] Auto-discharge function quickly lowers the output voltage to 0V, when the chip enable signal is switched from the active mode to the standby mode, by releasing the electrical charge accumulated in the external capacitor.

BLOCK DIAGRAMS

- **Fixed Output Voltage Type（HSOP-6J / SOT89-5）**

RP132Sxx1B / RP132Hxx1B

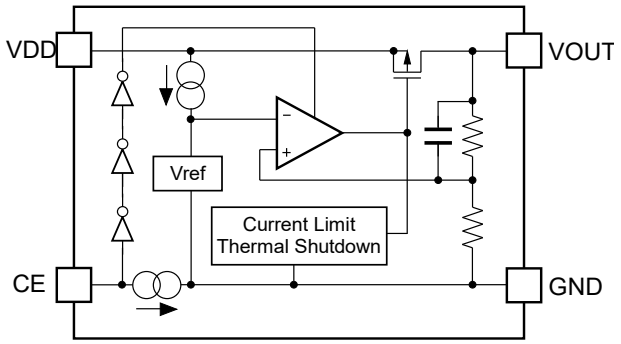

RP132Sxx1D / RP132Hxx1D

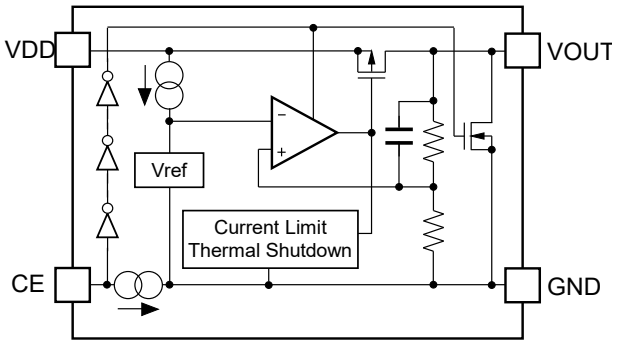

- **Fixed Output Voltage Type（TO-252-5-P2 / DFN(PL)1820-6）**

RP132Jxx1B / RP132Kxx1B

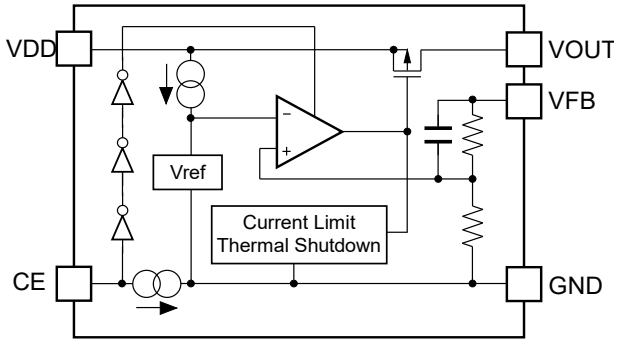

RP132Jxx1D / RP132Kxx1D

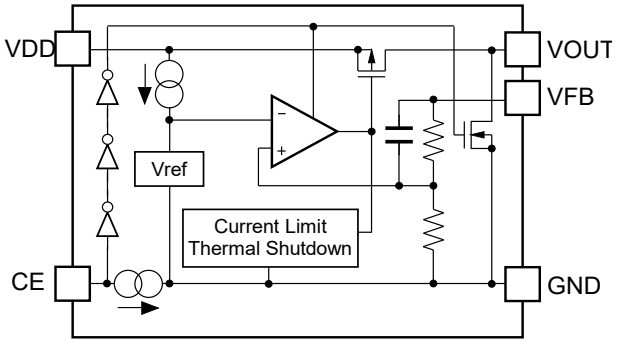

- **Fixed Output Voltage Type with DELAY pin（HSOP-6J）**

RP132Sxx1E

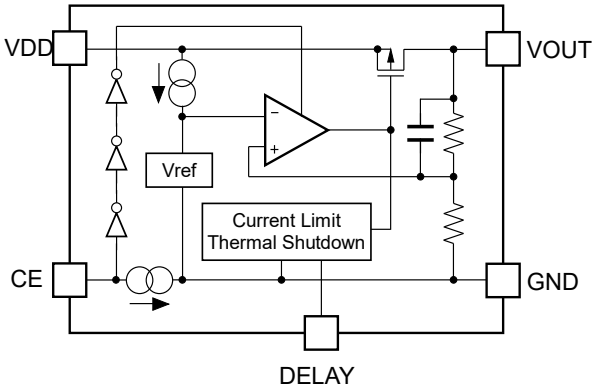

RP132Sxx1F

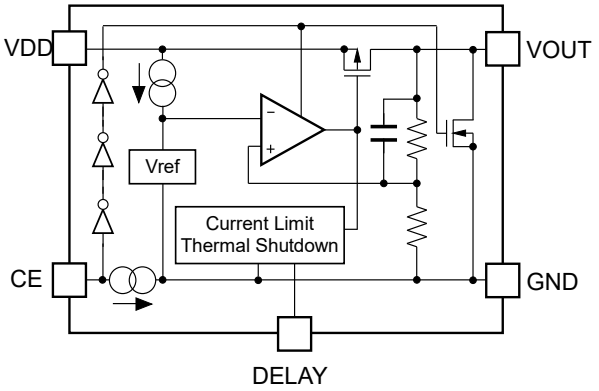

- **Fixed Output Voltage Type with DELAY pin（DFN(PL)1820-6）**

RP132Kxx1E

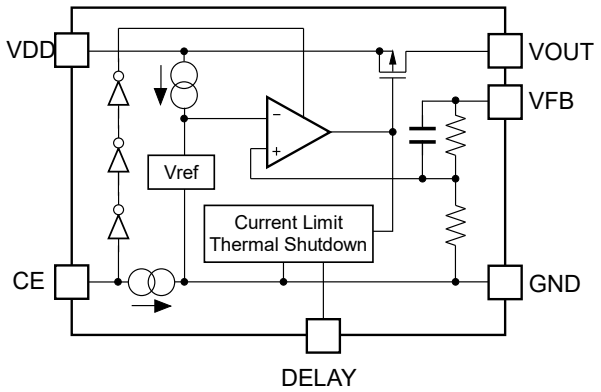

RP132Kxx1F

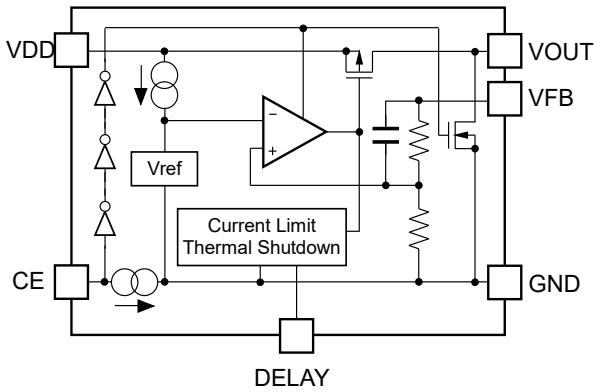

- **Adjustable Output Voltage Type（HSOP-6J / SOT-89-5 / TO-252-5-P2 /DFN(PL)1820-6）**

RP132S001B / RP132H001B / RP132J001B / RP132K001B

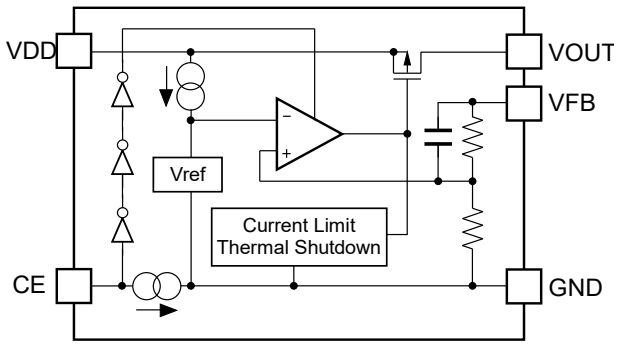

RP132S001D / RP132H001D / RP132J001D / RP132K001D

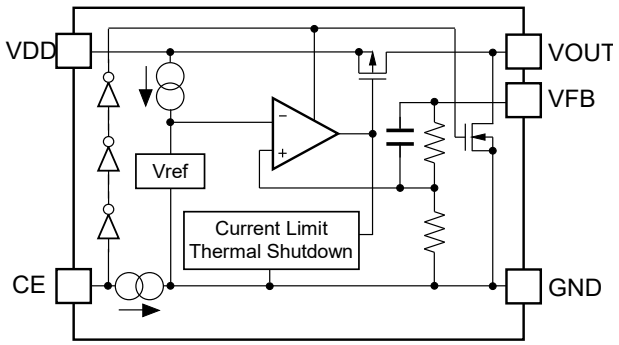

- **Adjustable Output Voltage Type with DELAY pin（DFN(PL)1820-6）**

RP132K001E

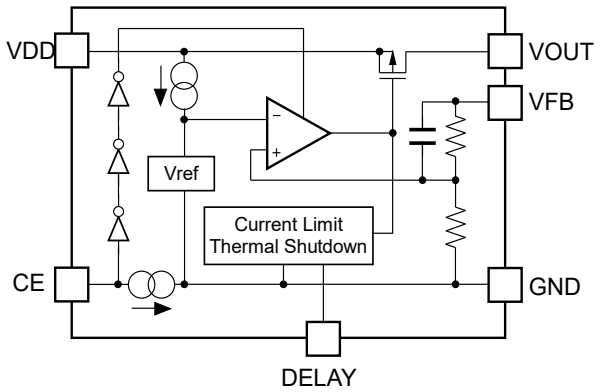

RP132K001F

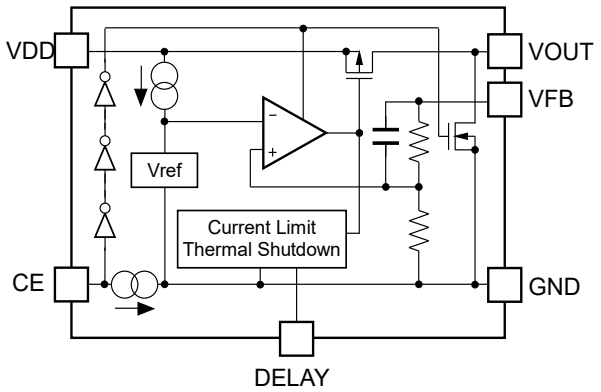

PIN DESCRIPTIONS

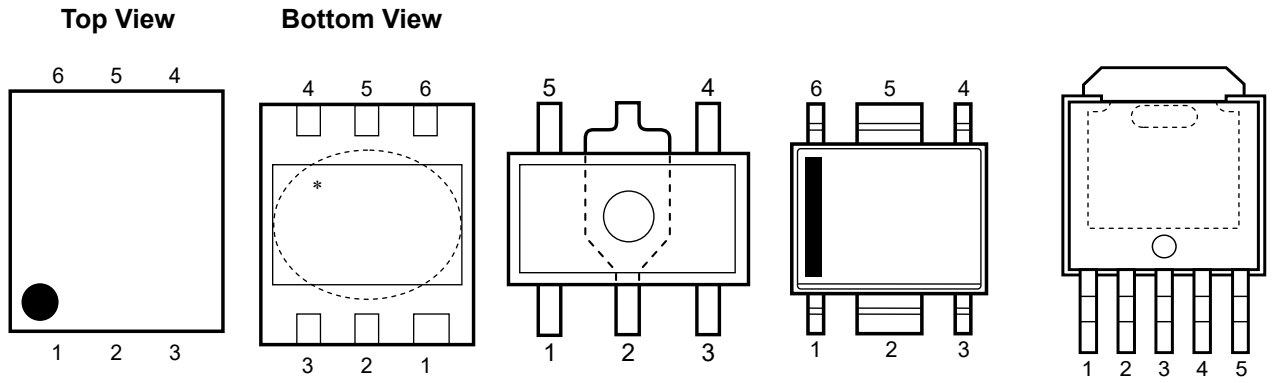

RP132K (DFN(PL)1820-6) **RP132H (SOT-89-5)** **RP132S (HSOP-6J)** **RP132J (TO-252-5-P2)**

RP132K[1] (DFN(PL)1820-6) Pin Description

Pin No.	Symbol	Pin Description
1	VOUT	Output Pin[2]
2	VFB	Feed Back Pin[2]
3	GND	Ground Pin
4	CE	Chip Enable Pin ("H" Active)
5	NC	No Connection (RP132K001B/D, RP132Kxx1B/D)
	DELAY	Delay Pin for setting inrush current limit time (RP132K001E/F, RP132Kxx1E/F)
6	VDD	Input Pin

∗Tab is GND level. (They are connected to the reverse side of this IC.) The tab is better to be connected to the GND, but leaving it open is also acceptable.

[1] When using Adjustable Output Voltage Type (RP132K001x), please follow "Notes on the Adjustable Output Voltage Type Settings".
[2] When using Fixed Output Voltage Type(RP132Kxx1x), the VOUT pin and the VFB pin should be connected.

RP132H[1] (SOT-89-5) Pin Description

Pin No.	Symbol	Pin Description
1	CE	Chip Enable Pin ("H" Active) (RP132Hxx1B/D)
	VFB	Feed Back Pin (RP132H001B/D)
2	GND	Ground Pin
3	NC	No Connection (RP132Hxx1B/D)
	CE	Chip Enable Pin ("H" Active) (RP132H001B/D)
4	VDD	Input Pin
5	VOUT	Output Pin

RP132S[1] (HSOP-6J) Pin Description

Pin No.	Symbol	Pin Description
1	VOUT	Output Pin
2	GND	Ground Pin[2]
3	NC	No Connection (RP132Sxx1B/D)
	VFB	Feed Back Pin (RP132S001B/D)
	DELAY	Delay Pin for setting inrush current limit time (RP132Sxx1E/F)
4	CE	Chip Enable Pin ("H" Active)
5	GND	Ground Pin[2]
6	VDD	Input Pin

RP132J[1] (TO-252-5-P2) Pin Description

Pin No.	Symbol	Pin Description
1	CE	Chip Enable Pin ("H" Active)
2	VDD	Input Pin
3	GND	Ground Pin
4	VOUT	Output Pin[3]
5	VFB	Feed Back Pin[3]

∗Tab is GND level. (They are connected to the reverse side of this IC.) The tab is better to be connected to the GND, but leaving it open is also acceptable.

[1] When using Adjstable Output Voltage Type (RP132x001x), please follow "Notes on Adjustable Output Voltage Type Settings".
[2] GND pins must be wired each other when mounted on boards.
[3] When using Fixed Output Voltage Type(RP132Jxx1x),VOUT pin and VFB pin should be connected.

ABSOLUTE MAXIMUM RATINGS

Symbol	Item		Rating	Unit
V_{IN}	Input Voltage		7.0	V
V_{CE}	Input Voltage (CE Pin)		−0.3 to 7.0	V
V_{FB}	Input Voltage (VFB Pin)		−0.3 to 7.0	V
V_{OUT}	Output Voltage		−0.3 to V_{IN}+0.3	V
P_D	Power Dissipation[1]	DFN(PL)1820-6, JEDEC STD.51-7	2200	mW
		SOT-89-5, JEDEC STD.51-7	2600	
		HSOP-6J, JEDEC STD.51-7	2700	
		TO-252-5-P2, JEDEC STD.51-7	3800	
Tj	Junction Temperature Range		−40 to 125	°C
Tstg	Storage Temperature Range		−55 to 125	°C

ABSOLUTE MAXIMUM RATINGS

Electronic and mechanical stress momentarily exceeded absolute maximum ratings may cause permanent damage and may degrade the life time and safety for both device and system using the device in the field.
The functional operation at or over these absolute maximum ratings are not assured.

RECOMMENDED OPERATING CONDITIONS

Symbol	Item	Rating	Unit
V_{IN}	Input Voltage	1.4 to 6.5	V
Ta	Operating Temperature Range	−40 to 85	°C

RECOMMENDED OPERATING CONDITIONS

All of electronic equipment should be designed that the mounted semiconductor devices operate within the recommended operating conditions. The semiconductor devices cannot operate normally over the recommended operating conditions, even if they are used over such ratings by momentary electronic noise or surge. And the semiconductor devices may receive serious damage when they continue to operate over the recommended operating conditions.

[1] Refer to *POWER DISSIPATION* for detailed information.

ELECTRICAL CHARACTERISTICS

V_{IN}=Set V_{OUT}+1.0V, I_{OUT}=1mA, C_{IN}=2.2μF, C_{OUT}=2.2μF (V_{OUT} ≤ 3.6V) / 4.7μF(V_{OUT}＞3.6V)
The specification in ☐ is checked and guaranteed by design engineering at −40°C ≤ Ta ≤ 85°C, unless otherwise noted.

RP132xxx1B/D(Fixed Output Voltage Type) /
RP132S/Kxx1E/F(Fixed Output Voltage Type with DELAY pin) (Ta = 25°C)

Symbol	Item	Conditions		Min.	Typ.	Max.	Unit
V_{OUT}	Output Voltage	Ta = 25°C	V_{OUT} > 1.5V	×0.99		×1.01	V
			V_{OUT} ≤ 1.5V	−15		15	mV
		−40°C ≤ Ta ≤ 85°C	V_{OUT} > 1.5V	×0.981		×1.019	V
			V_{OUT} ≤ 1.5V	−29		29	mV
I_{LIM}	Output Current Limit			1			A
$\Delta V_{OUT}/\Delta I_{OUT}$	Load Regulation	0.1mA ≤ I_{OUT} ≤ 300mA			3	20	mV
		0.1mA ≤ I_{OUT} ≤ 1A			5	60	
V_{DIF}	Dropout Voltage	Refer to the following "Dropout Voltage"					
I_{SS}	Supply Current	I_{OUT}=0mA (V_{IN}=6.5V)			65	85	μA
Istandby	Standby Current	V_{CE}=0V, V_{IN}=6.5V			0.15	0.60	μA
$\Delta V_{OUT}/\Delta V_{IN}$	Line Regulation	Set V_{OUT}+0.5V ≤ V_{IN} ≤ 6.5V ∗ However, V_{IN} ≥1.6V			0.05	0.10	%/V
R_R	Ripple Rejection	f=1kHz Ripple 0.2Vp-p I_{OUT}=100mA	V_{OUT} ≤ 3.3V		70		dB
			V_{OUT} > 3.3V		60		
V_{IN}	Input Voltage			1.4		6.5	V
I_{SC}	Short Current Limit	V_{OUT}=0V			250		mA
I_{PD}	CE Pull-down Current				0.3	0.7	μA
V_{CEH}	CE Input Voltage "H"			1.0			V
V_{CEL}	CE Input Voltage "L"					0.4	V
en	Output Noise	BW=10Hz to 100kHz			70		μVrms
T_{TSD}	Thermal Shutdown Detection Temperature	Junction Temperature			165		°C
T_{TSR}	Thermal Shutdown Released Temperature	Junction Temperature			95		°C
R_{LOW}	Low Output Nch Tr. ON Resistance (D/F version)	V_{IN}=4.0V, V_{CE}=0V			50		Ω
I_{DELAY}	DELAY pin Current (DELAY pin version)	V_{IN}=4.0V		0.7	1.2	1.7	μA

All test items listed under Electrical Characteristics are done under the pulse load condition (Tj≈Ta=25ºC) except Output Noise, Ripple Rejection, Dropout Voltage at 1A Output Current and Load Regulation and Thermal Shutdown.

The specification in ☐ is checked and guaranteed by design engineering at −40°C ≤ Ta ≤ 85°C, unless otherwise noted.

Dropout Voltage **(Ta = 25°C)**

Output Voltage V_{OUT} (V)	Dropout Voltage V_{DIF} (V)					
	Condition	Typ.	Max.	Condition	Typ.	Max.
0.8 ≤ V_{OUT} < 0.9	I_{OUT}=300mA	0.67	0.89	I_{OUT}=1A	1.20	1.54
0.9 ≤ V_{OUT} < 1.0		0.59	0.82		1.10	1.46
1.0 ≤ V_{OUT} < 1.1		0.51	0.73		1.05	1.39
1.1 ≤ V_{OUT} < 1.2		0.42	0.63		0.96	1.31
1.2 ≤ V_{OUT} < 1.5		0.36	0.54		0.90	1.23
1.5 ≤ V_{OUT} < 2.6		0.24	0.33		0.78	1.05
2.6 ≤ V_{OUT} < 3.3		0.15	0.21		0.52	0.72
3.3 ≤ V_{OUT} ≤ 5.5		0.13	0.18		0.46	0.68

V_{IN}=Set V_{OUT}+1.0V, I_{OUT}=1mA, C_{IN}=2.2µF, C_{OUT}=2.2µF, V_{OUT} ≤ 3.6V, 4.7µF V_{OUT} > 3.6V
The specification in ☐ is checked and guaranteed by design engineering at −40°C ≤ Ta ≤ 85°C, unless otherwise noted.

RP132x001B/D(Adjustable Output Voltage Type) /
RP132K001E/F(Adjustable Output Voltage Type with DELAY pin) (Ta = 25°C)

Symbol	Item	Conditions		Min.	Typ.	Max.	Unit
V_{FB}	Feedback Voltage	Ta =25°C	V_{OUT}=V_{FB}	0.785	0.800	0.815	V
		−40°C ≤ Ta ≤ 85°C		0.771		0.829	
V_{OUT}	Output Voltage Adjusting Range			0.8		5.5	V
I_{LIM}	Output Current Limit	V_{OUT}=V_{FB}		1			A
$\Delta V_{OUT}/\Delta I_{OUT}$	Load Regulation	0.1mA ≤ I_{OUT} ≤ 300mA			3	20	mV
		0.1mA ≤ I_{OUT} ≤ 1A			5	60	
V_{DIF}	Dropout Voltage	V_{OUT}=V_{FB}	I_{OUT}=300mA		0.67	0.89	V
			I_{OUT}=1A		1.20	1.54	
ISS	Supply Current	V_{OUT}=V_{FB}, I_{OUT}=0mA (VIN=6.5V)			65	85	µA
Istandby	Standby Current	V_{CE}=0V, V_{IN}=6.5V			0.15	0.60	µA
$\Delta V_{OUT}/\Delta V_{IN}$	Line Regulation	V_{OUT}=V_{FB}, 1.6V ≤ V_{IN} ≤ 6.5V			0.05	0.10	%/V
R_R	Ripple Rejection	f=1kHz, Ripple 0.2Vp-p, I_{OUT}=100mA	V_{OUT}=V_{FB}		70		dB
V_{IN}	Input Voltage			1.4		6.5	V
I_{SC}	Short Current Limit	V_{OUT}=V_{FB} =0V			250		mA
I_{PD}	CE Pull-down Current				0.3	0.7	µA
V_{CEH}	CE Input Voltage "H"			1.0			V
V_{CEL}	CE Input Voltage "L"					0.4	V
en	Output Noise	BW=10Hz to 100kHz			70		µVrms
T_{TSD}	Thermal Shutdown Detection Temperature	Junction Temperature			165		°C
T_{TSR}	Thermal Shutdown Released Temperature	Junction Temperature			95		°C
R_{LOW}	Low Output Nch Tr. ON Resistance (D/F version)	V_{IN}=4.0V, V_{CE}=0V			50		Ω
I_{DELAY}	DELAY pin Current (DELAY pin version)	V_{IN}=4.0V		0.7	1.2	1.7	µA

All test items listed under Electrical Characteristics are done under the pulse load condition (Tj≈Ta=25ºC) except Output Noise, Ripple Rejection, Dropout Voltage at 1A Output Current and Load Regulation and Thermal Shutdown.

APPLICATION INFORMATION

Typical Application Circuits

Fixed Output Voltage Type (HSOP-6J/ SOT89-5)

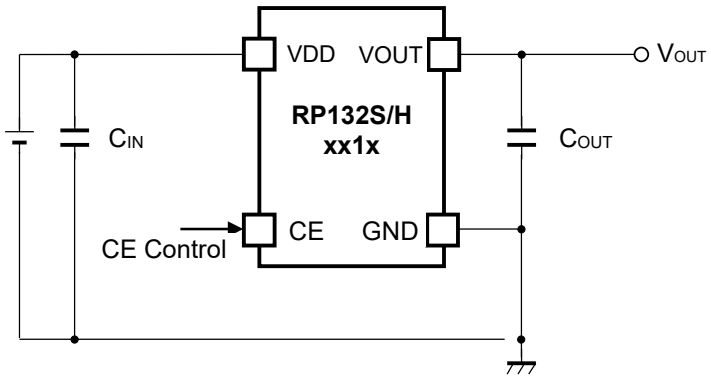

Fixed Output Voltage Type (TO-252-5-P2/ DFN(PL)1820-6)

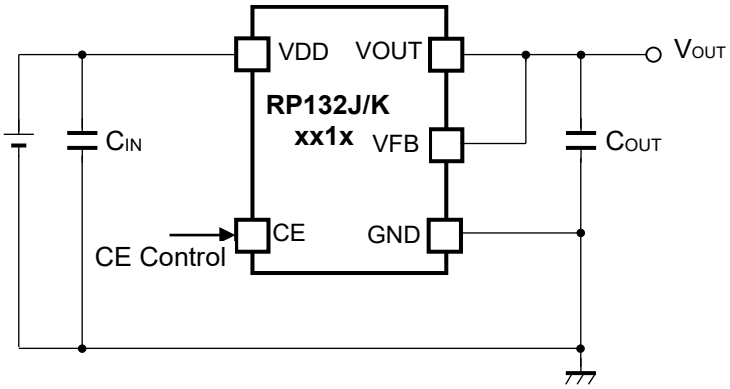

Adjustable Output Voltage Type (HSOP-6J / SOT89-5/ TO-252-5-P2 / DFN(PL)1820-6)

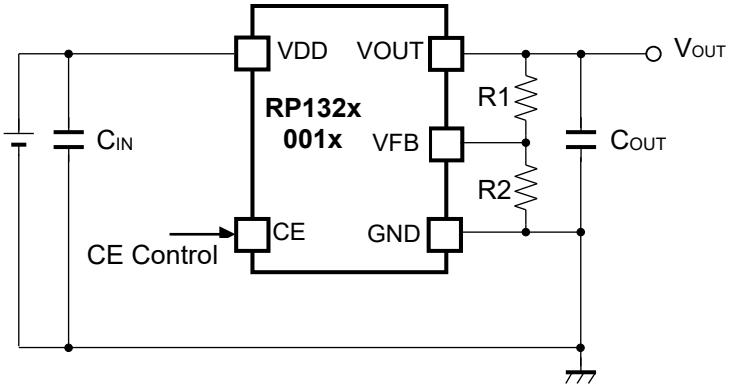

Fixed Output Voltage Type with DELAY pin (HSOP-6J)

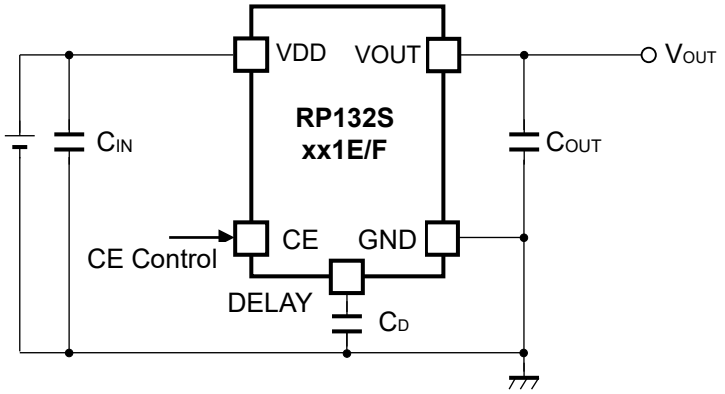

Fixed Output Voltage Type with DELAY pin (DFN(PL)1820-6)

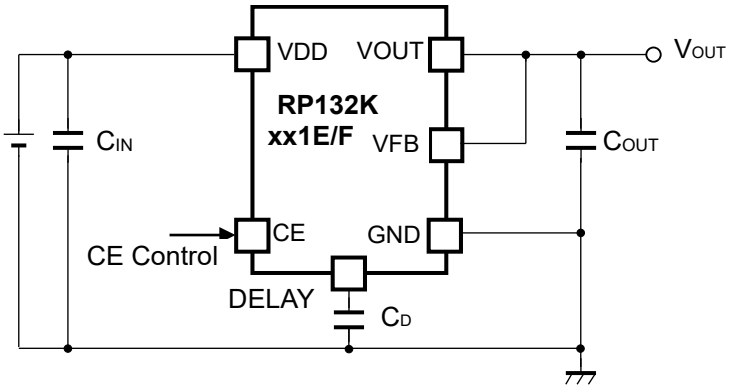

Adjustable Output Voltage Type with DELAY pin (DFN(PL)1820-6)

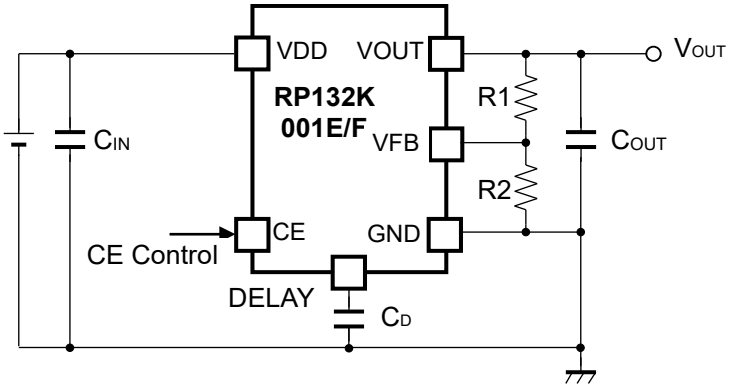

Recommended External Components

V_{OUT}	Capacitors	
$V_{OUT} \leq 3.6V$	C_{IN} (C1)	Kyocera 2.2μF (size:1005) [CM05X5R225M06A]
	C_{OUT} (C2)	Kyocera 2.2μF (size:1608) [CM105X5R225K06AB]
$V_{OUT} > 3.6V$	C_{IN} (C1)	Kyocera 2.2μF (size:1005) [CM05X5R225K06A]
	C_{OUT} (C2)	Kyocera 4.7μF (size:1608) [CM105X5R475M06AB]

Please refer to "Technical Notes on Adjustable Output Voltage Type" when using R1 and R2 as output capacitors. Also refer to "Inrush Current Limit Time Settings" concerning with C_D.

Technical Notes on the External Components

When using this IC, consider the following points:

Phase Compensation

In this IC, phase compensation is made for securing stable operation even if the load current is varied. For this purpose, use a 4.7μF or more capacitor C_{OUT} between V_{OUT} pin and GND pin, and as close as possible to the pins.

If a tantalum capacitor is used, and its ESR (Equivalent Series Resistance) of C_{OUT} is large, the loop oscillation may result. Because of this, select C_{OUT} carefully considering its frequency characteristics.

PCB Layout

Make V_{DD} and GND lines sufficient. If their impedance is high, noise pickup or unstable operation may result. Connect a 2.2 μF or more capacitor C_{IN} between V_{DD} and GND pin with a capacitance value as "Recommendation value of the external capacitors" above or more, and as close as possible to the pins.

Set external components, especially the output capacitor C_{OUT}, as close as possible to the IC, and make wiring as short as possible.

When using the Adjustable Output Voltage Type, the transient response could be affected by the external resistors. Evaluate the circuit taking the actual conditions of use into account.

Output Voltage Setting Method (Adjustable Output Voltage Type)

RP132x081x can be adjusted the output voltage up to 5.5V by using the external divider resistors. Also, please use 16kΩ or less for R2 resistor. If the V_{FB} voltage is described as setV_{FB}, the output voltage can be set by using the following equations. SetV_{FB} is equal to 0.8V. The V_{OUT} pin of RP132x081x should be connected to the V_{FB} pin.

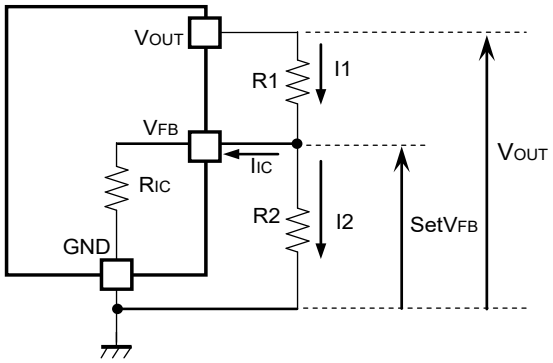

$I1 = I_{IC} + I2$ ..... (1)

$I2 = setV_{FB} / R2$ ..... (2)

Thus,

$I1 = I_{IC} + setV_{FB} / R2$ ..... (3)

Therefore,

$V_{OUT} = setV_{FB} \times R1 \times I1$ ..... (4)

Put Equation (3) into Equation (4), then

$V_{OUT} = setV_{FB} + R1(I_{IC} + setV_{FB} / R2)$

$= setV_{FB} \times (1+R1/R2) + R1 \times I_{IC}$ ..... (5)

In Equation (5), R1x I_{IC} is the error-causing factor in V_{OUT}.

As for I_{IC},

$I_{IC} = setV_{FB} / R_{IC}$ ..... (6)

Therefore, the error-causing factor R1x I_{IC} can be described as follows.

$R1 \times I_{IC} = R1 \times setV_{FB} / R_{IC}$

$= setV_{FB} \times R1 / R_{IC}$ ..... (7)

For better accuracy, choosing R1 ($<<R_{IC}$) reduces this error.

Without the error-causing factor R1x I_{IC}, the output voltage can be calculated by the following equation

$V_{OUT} = setV_{FB} \times ((R1 + R2) / R2)$ ..... (8)

R_{IC} of RP132x is approximately Typ.1.3MΩ (Ta=25°C, this value is guaranteed by design.). The value could be affected by the temperature, therefore evaluate the circuit taking the actual conditions of use into account.

Inrush Current Limit Time Settings

The RP132xSeries include the circuit which can limit the inrush current at start-up to 500mA or less. The current limit time of B/D version is fixed internally as approximately Typ.500μs. On the other hand, the current limit times of E/F versions are adjustable by controlling the DELAY pin value, which is the capacitance value connected between DLEAY pin and GND pin. The relation between Inrush Current Limit Time (t_D[s]) and the DELAY pin capacitance (C_D[F]) can be described in the following equation.

$t_D = (C_D + 70 \times 10^{-12}) \times 0.525 \times 10^6$

When not using C_D on E/F versions, DELAY pin should be open. In this case, C_D=0 is applied to the above equation and as a result, 37μs can be obtained. That means, when using C_D on E/F versions, the inrush current limit time will be more than 37μs. Please note that during the inrush current limit time, the load current cannot be more than the limited current.

ESR vs. Output Current

The relations between I_{OUT} (Output Current) and ESR of an output capacitor are shown below. The conditions when the white noise level is under 40μV (Avg.) are marked as the hatched area in the graph.

Measurement Conditions

Frequency Band : 10Hz to 2MHz
Temperature : –40°C to 85°C
Hatched Area : Noise level is under 40μVms (Avg.)
C_{IN} (C1) : 2.2μF (Kyocera CM05X5R225M06A)
C_{OUT} (C2) : 2.2μF (V_{OUT} = 0.8V, Kyocera CM105X5R225K06AB)
4.7μF (V_{OUT} = 5.5V, Kyocera CM105X5R475M06AB)

RP132x081x

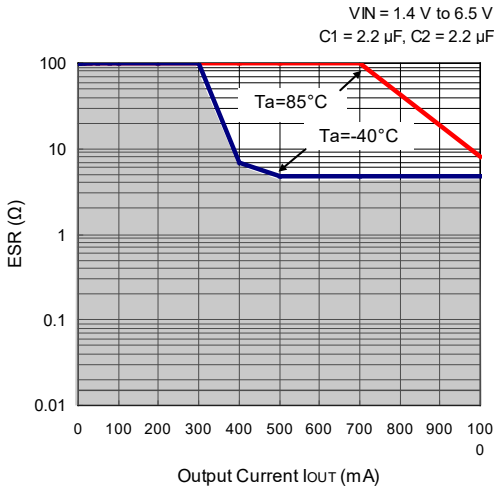

RP132x551x

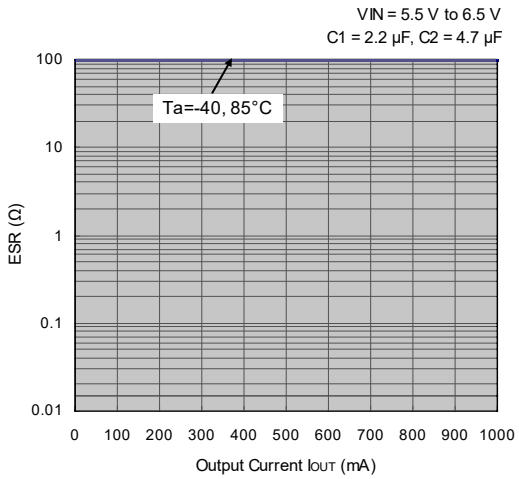

TYPICAL CHARACTERISTICS

Typical Characteristics are intended to be used as reference data; they are not guaranteed.

1) Output Voltage vs. Input Voltage (Ta=25°C)

RP132x081x

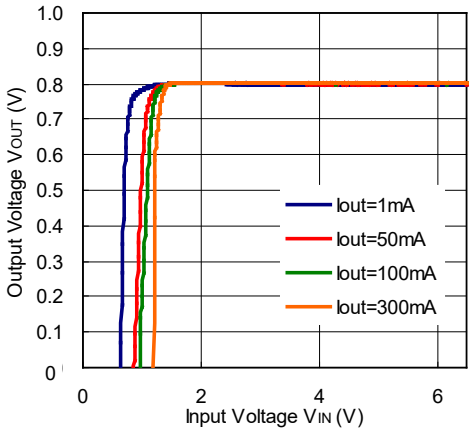

RP132x151x

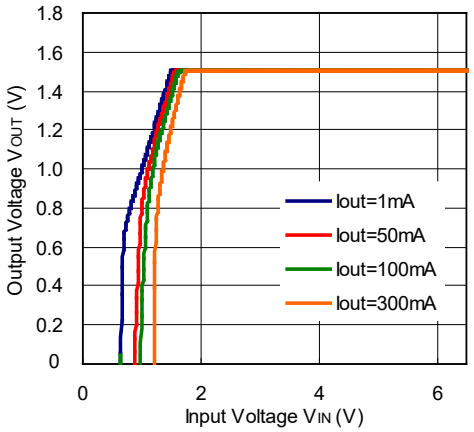

RP132x331x

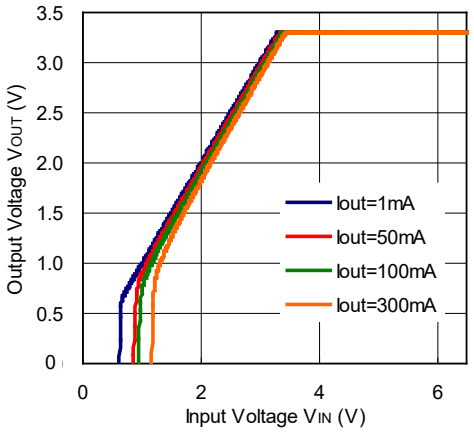

RP132x551x

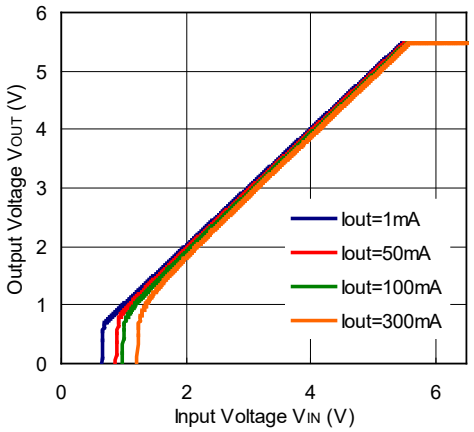

2) Supply Current vs. Input Voltage (Ta=25°C)

RP13x081x

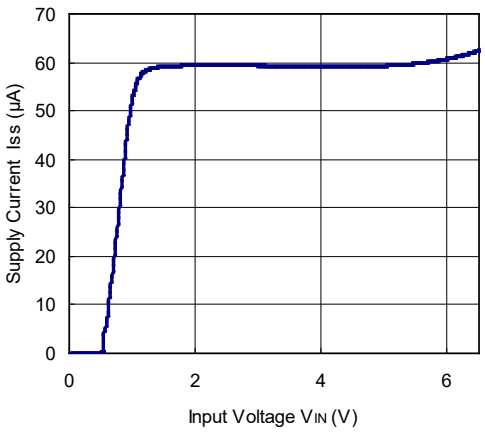

RP132x151x

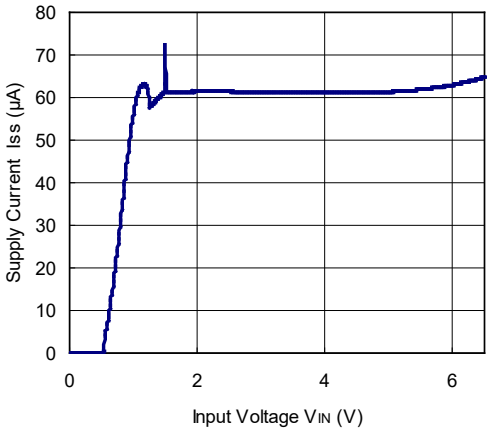

RP132x331x

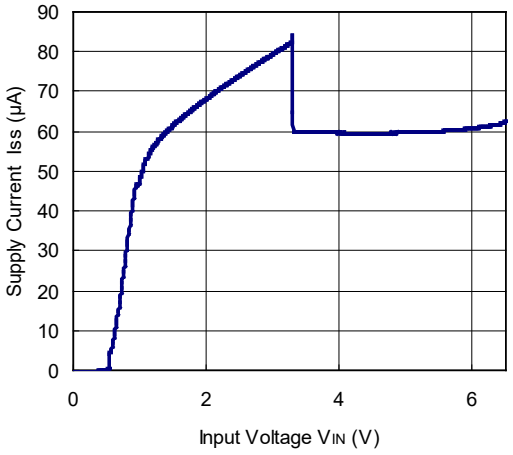

RP132x551x

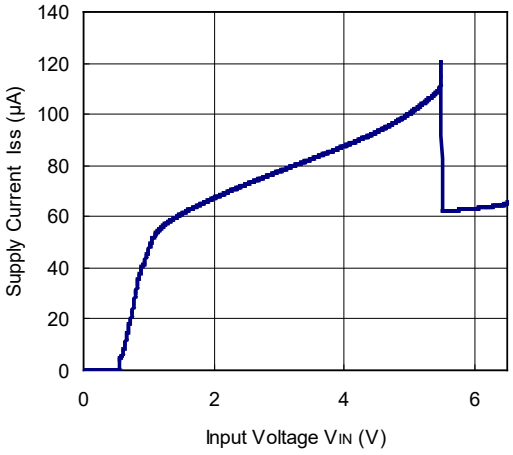

3) Supply Current vs. Temperature

RP132x081x

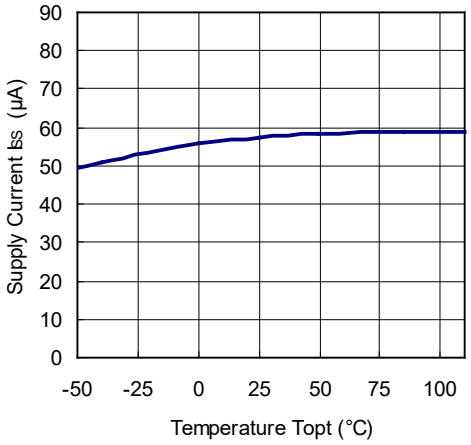

RP132x151x

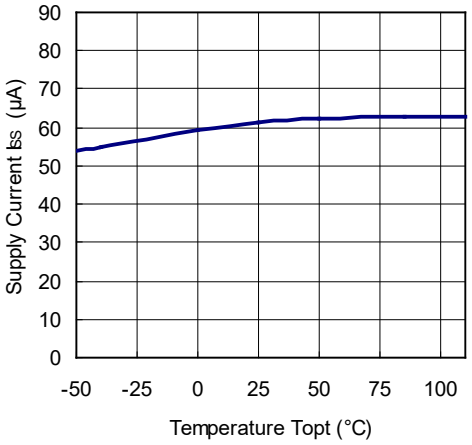

RP132x331x

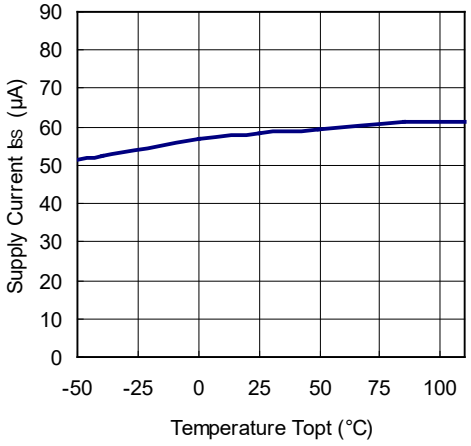

RP132x551x

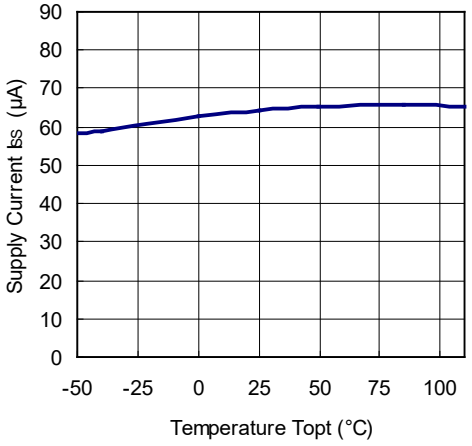

4) Output Voltage vs. Temperature

RP132x081x

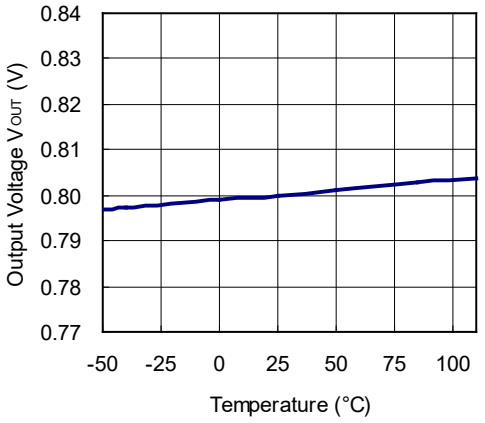

RP132x151x

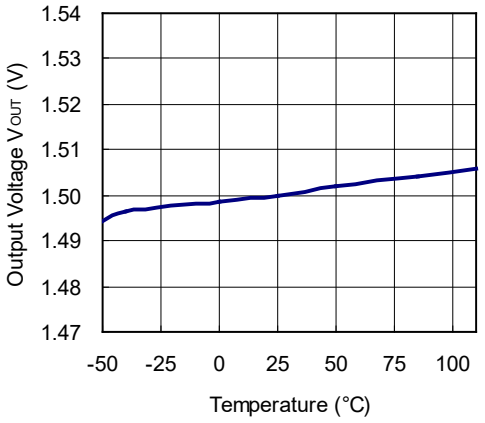

RP132x331x

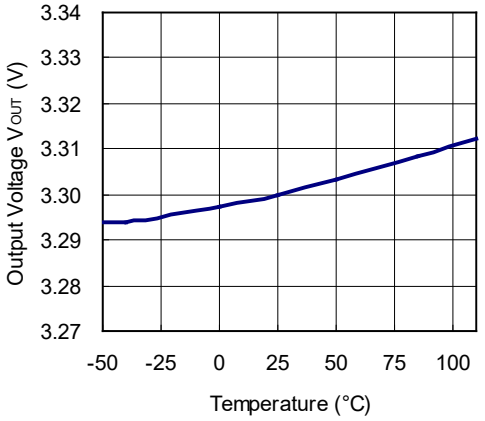

RP132x551x

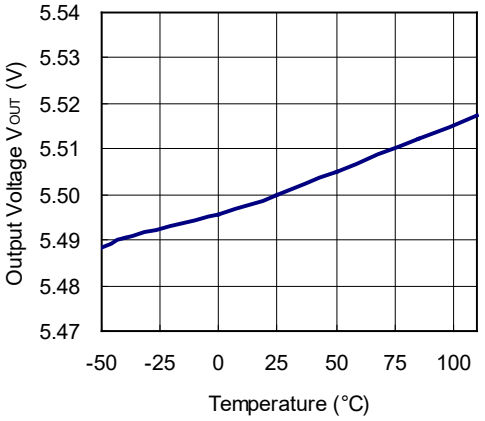

5) Dropout Voltage vs. Output Current

RP132x081x

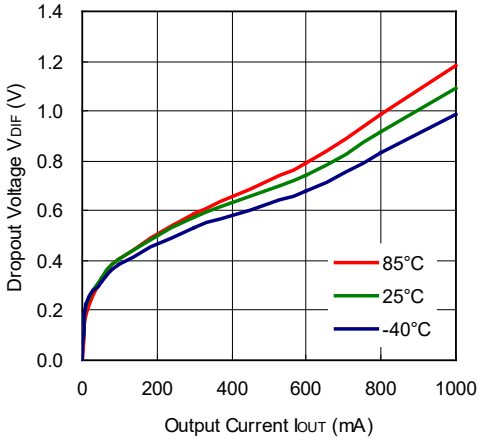

RP132x151x

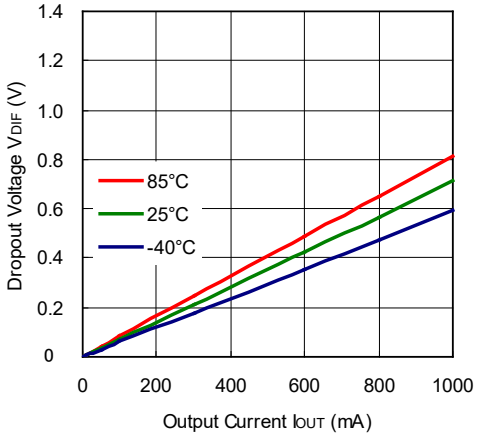

RP132x331x

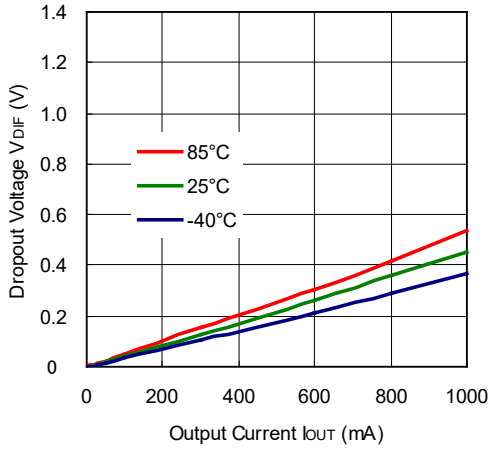

RP132x551x

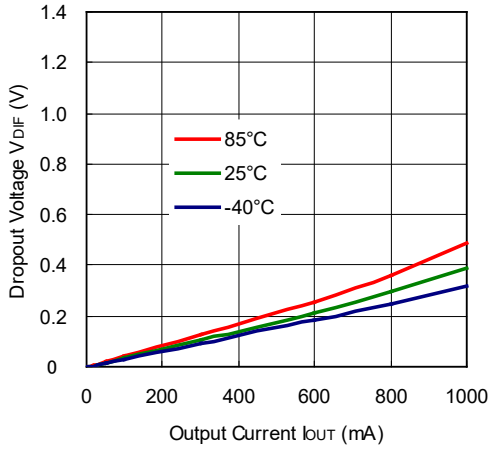

6) Dropout Voltage vs. Set Output Voltage

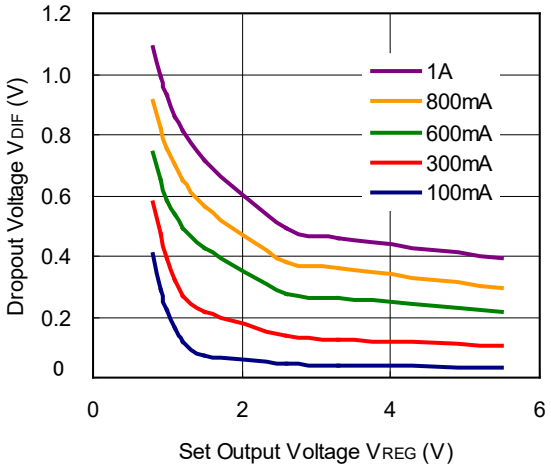

7) Ripple Rejection vs. Input Voltage (C_{IN}=none, Ripple=0.2Vp-p, Ta=25°C)

RP132x331x

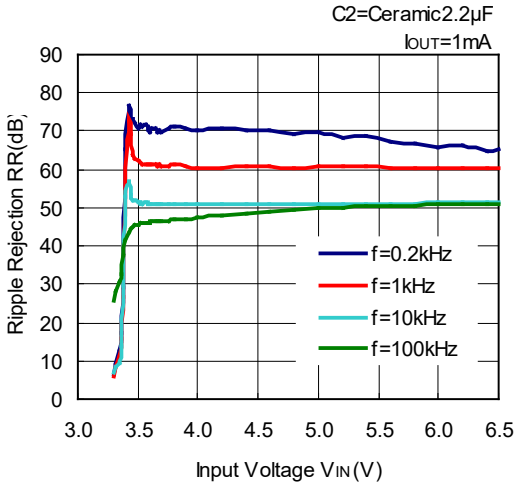

RP132x331x

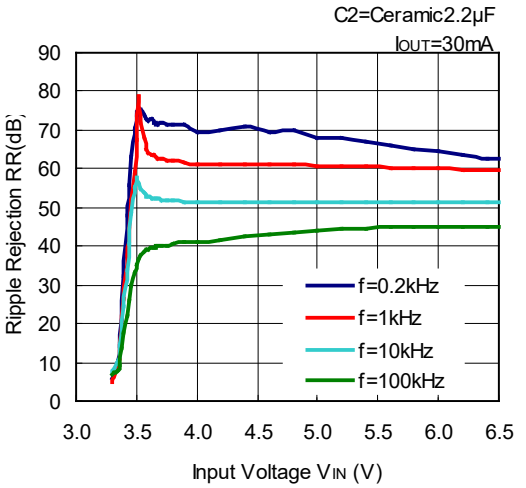

RP132x331x

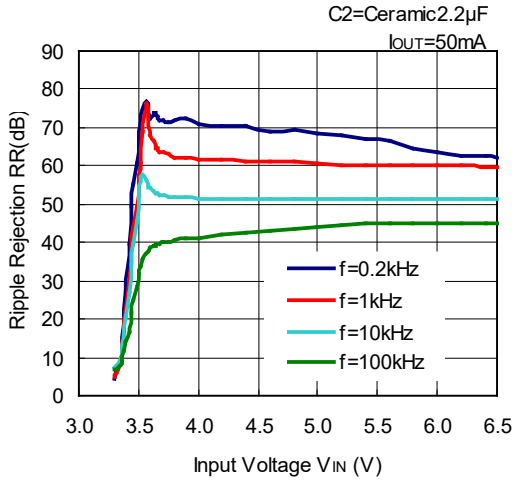

RP131x551x

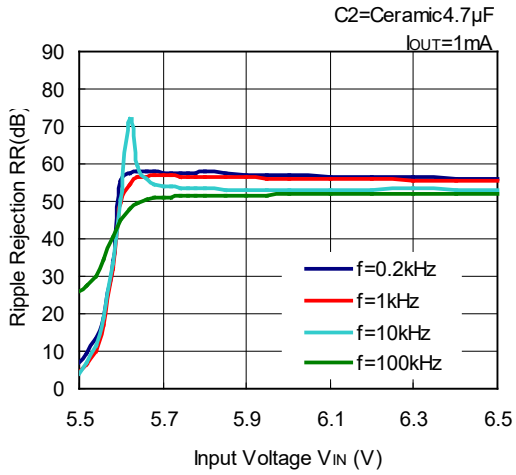

RP132x551x

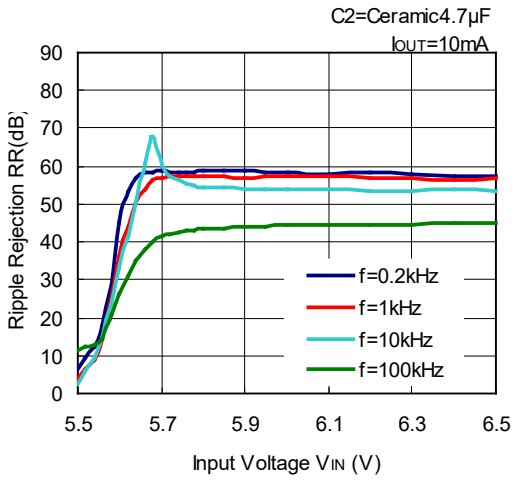

RP132x551x

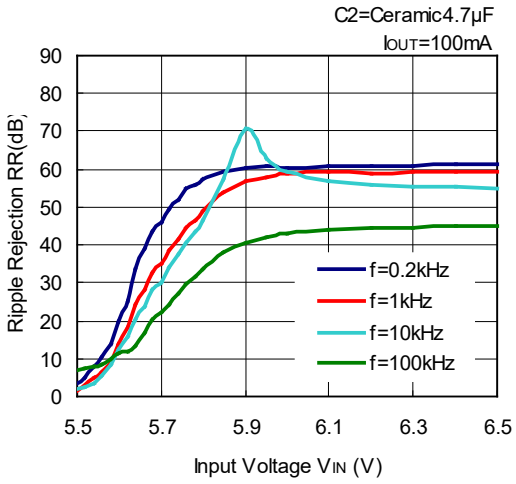

8) Ripple Rejection vs. Frequency (C_{IN} =none, Ta=25°C)

RP132x081x

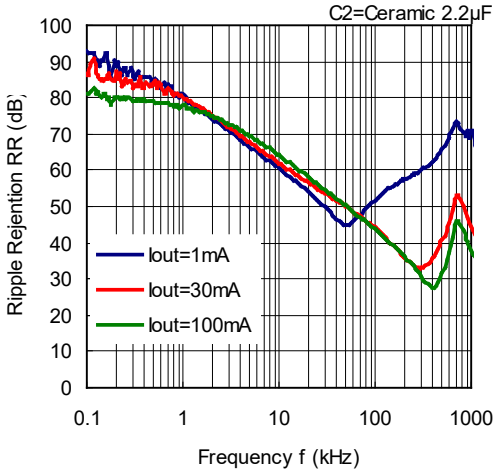

RP132x331x

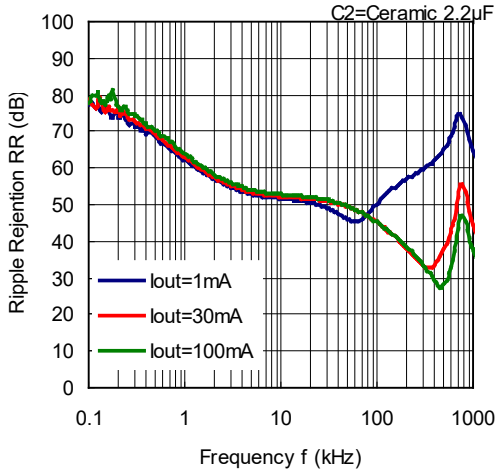

RP132x551x

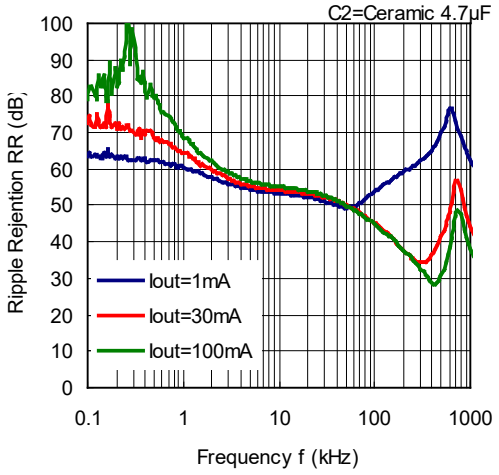

9) Input Transient Response (C_{IN} =none, I_{OUT}=100mA, tr=tf=5µs, Ta=25°C)

RP132x081x

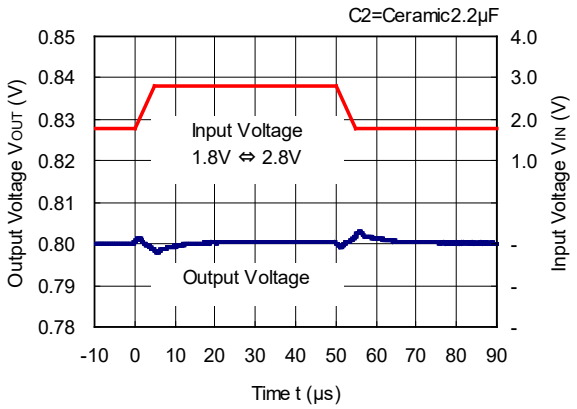

RP132x331x

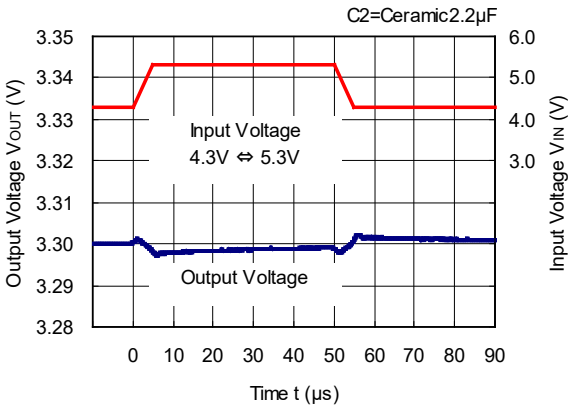

RP132x551x

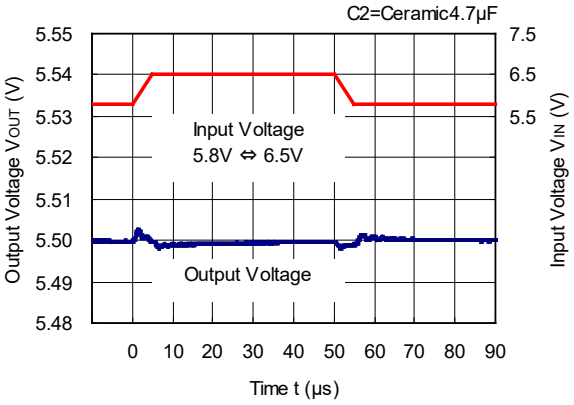

10) Load Transient Response (V_{IN}=V_{OUT}+1.0V, C_{IN} =Ceramic 2.2µF, tr=tf=0.5µs, Ta=25°C)

RP132x081x

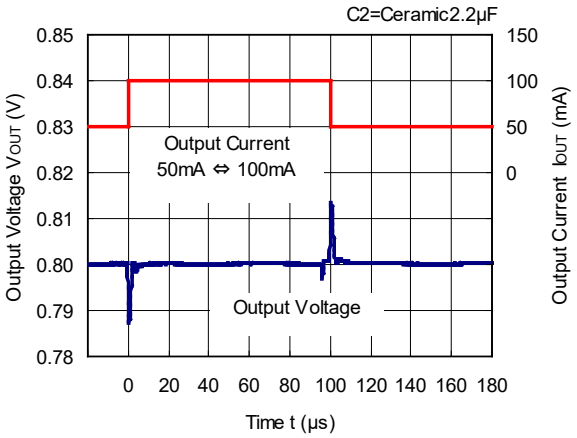

RP132x081x

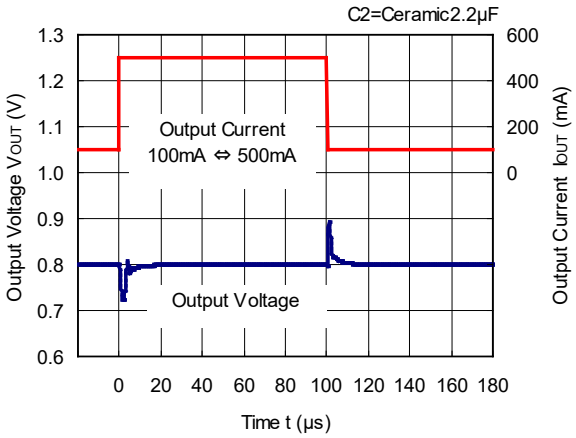

RP132x081x

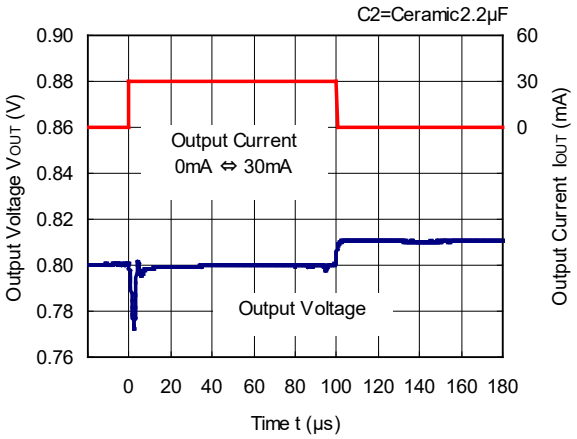

RP132x331x

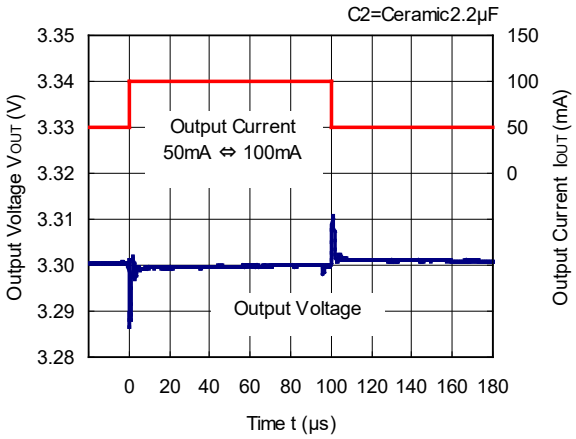

RP132x331x

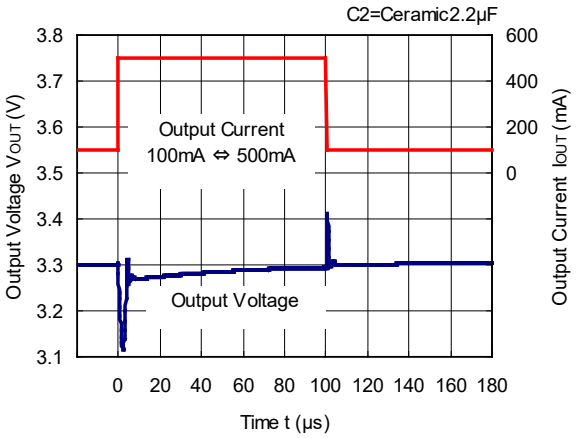

RP132x331x

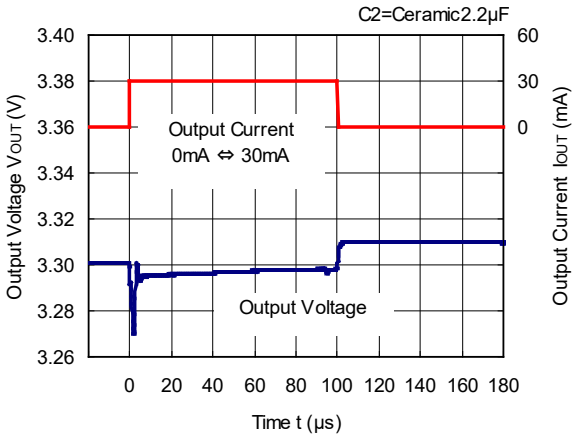

RP132x551x

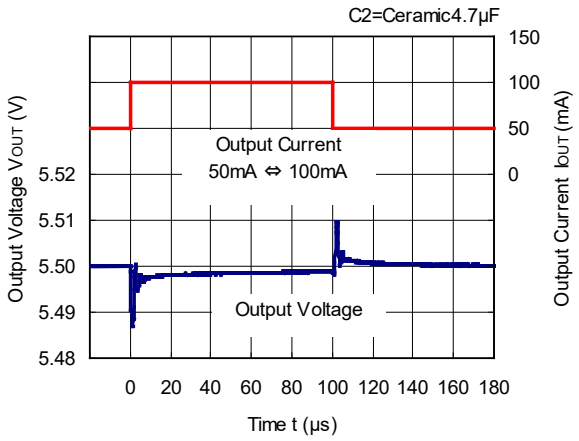

RP132x551x

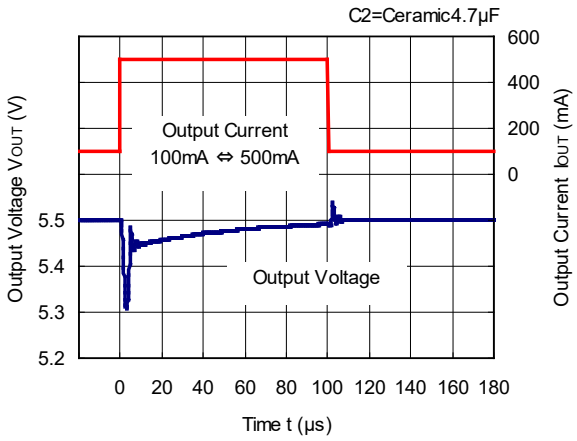

RP132x551x

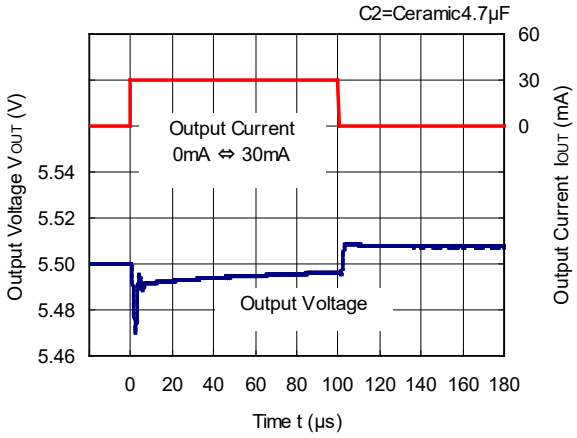

11) Turn on Speed with CE pin (C_{IN} =Ceramic 2.2µF, Ta=25°C)

RP132x081x

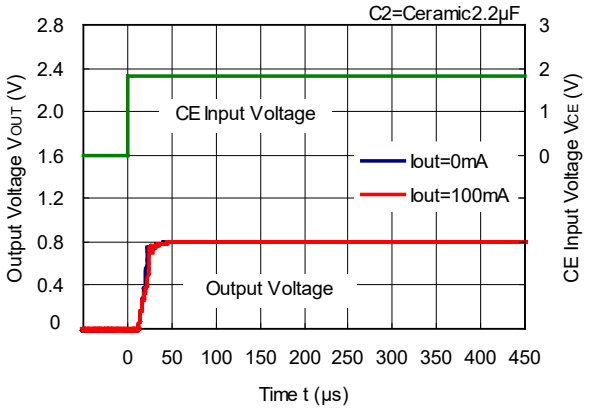

RP132x331x

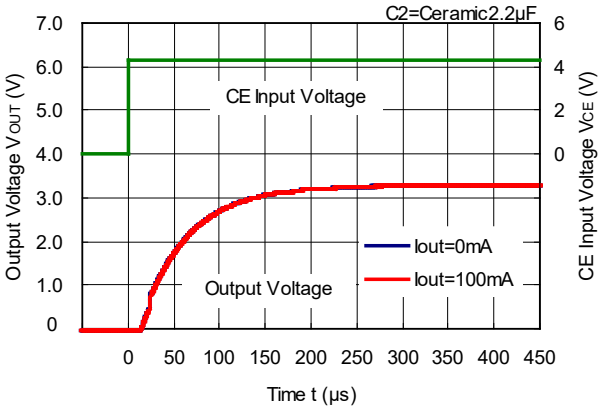

RP132x551x

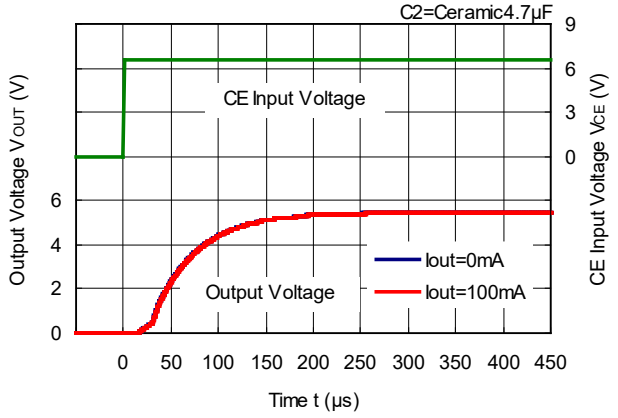

12) Turn off Speed with CE pin (D version) (C_{IN} =Ceramic 2.2µF, Ta=25°C)

RP132x081D

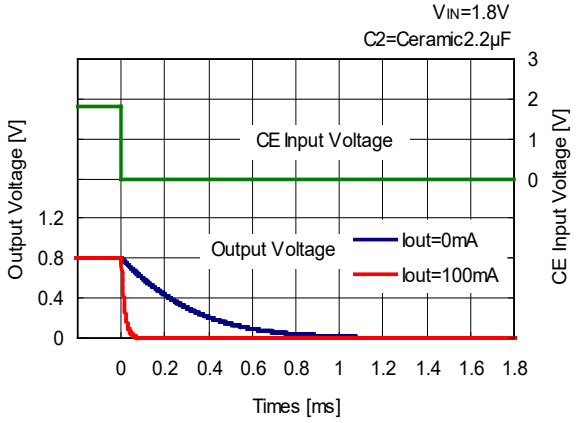

RP132x331D

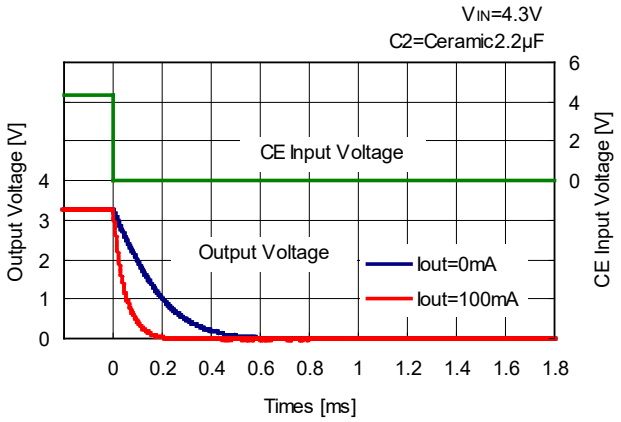

RP132x551D

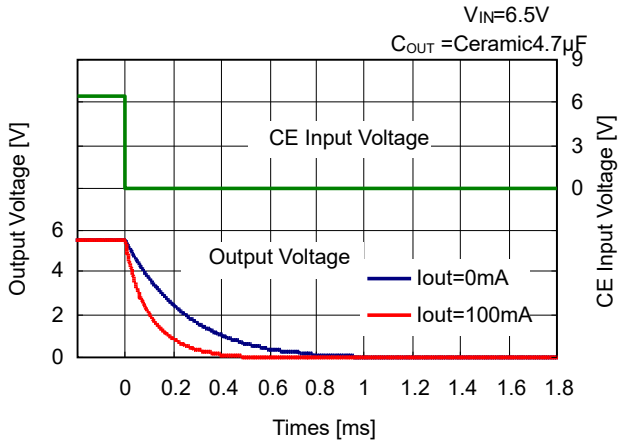

13) Inrush Current (C_{IN} =Ceramic 2.2µF, I_{OUT}=100mA, Ta=25°C)

RP132x081x

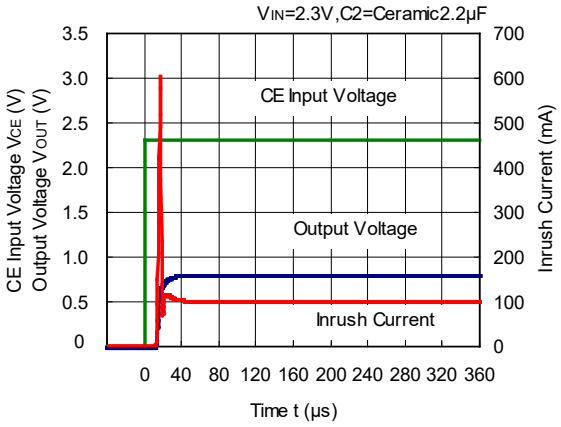

RP132x331x

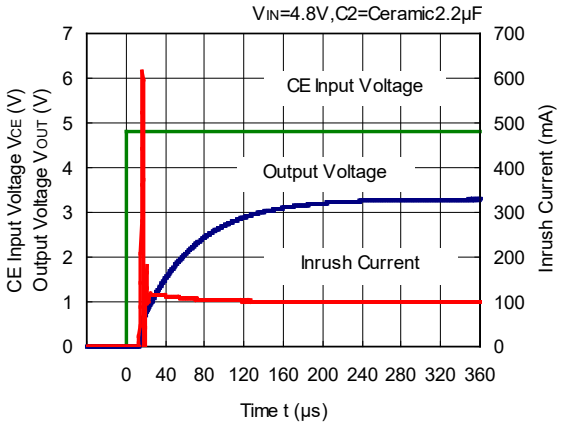

RP132x551x

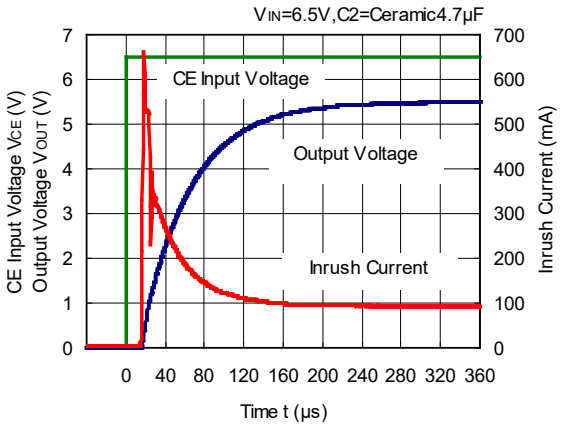

14) Minimum Operating Voltage

RP132x081x

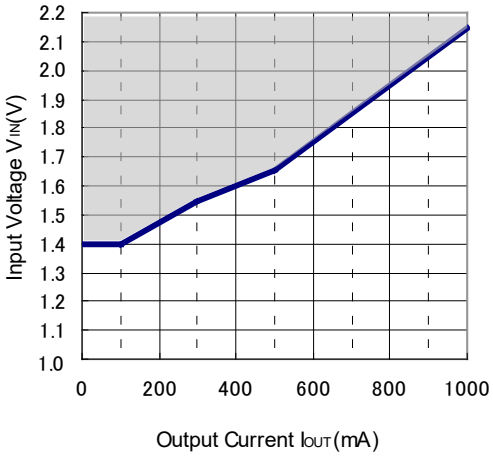

The operation rage that can output 0.8V is shown by the hatched area in the graph.

15) Inrush Current Limit Time vs. C_D Capacitance (E / F Version)

RP132x081x

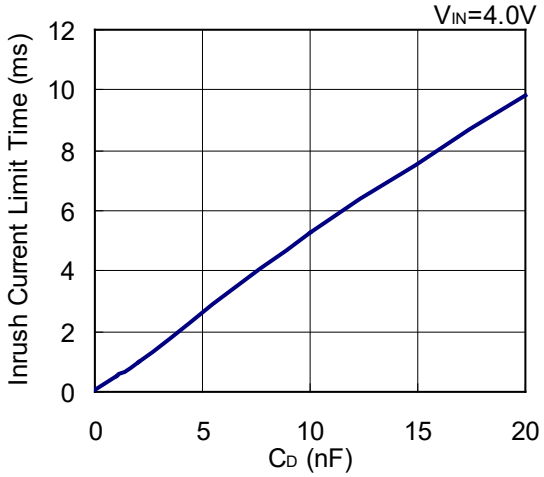

16) Inrush Current Limit Time vs. Input Voltage (E / F Version)

RP132x081x

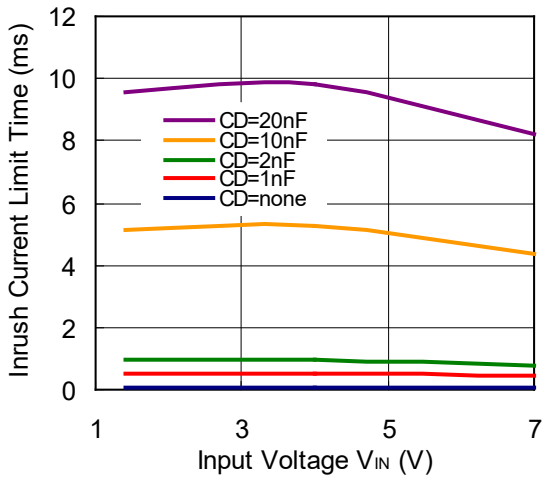

PD-DFN(PL)1820-6-(85125150)-JE-B

The power dissipation of the package is dependent on PCB material, layout, and environmental conditions. The following measurement conditions are based on JEDEC STD. 51.

Measurement Conditions

Item	Measurement Conditions
Environment	Mounting on Board (Wind Velocity = 0 m/s)
Board Material	Glass Cloth Epoxy Plastic (Four-Layer Board)
Board Dimensions	76.2 mm × 114.3 mm × 0.8 mm
Copper Ratio	Outer Layer (First Layer): Less than 95% of 50 mm Square Inner Layers (Second and Third Layers): Approx. 100% of 50 mm Square Outer Layer (Fourth Layer): Approx. 100% of 50 mm Square
Through-holes	ϕ 0.2 mm × 36 pcs

Measurement Result (Ta = 25°C, Tjmax = 125°C)

Item	Measurement Result
Power Dissipation	2200 mW
Thermal Resistance (θja)	θja = 45°C/W
Thermal Characterization Parameter (ψjt)	ψjt = 18°C/W

θja: Junction-to-Ambient Thermal Resistance

ψjt: Junction-to-Top Thermal Characterization Parameter

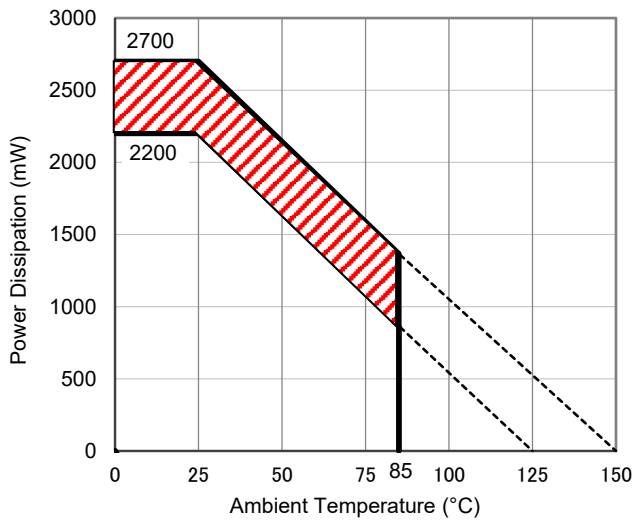

Power Dissipation vs. Ambient Temperature

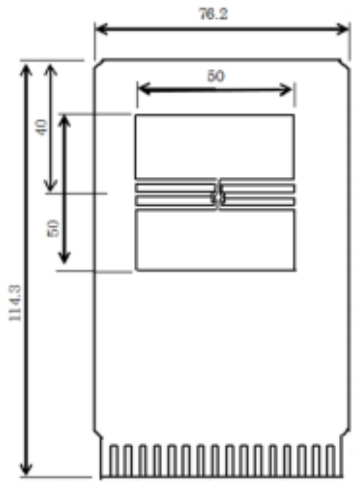

Measurement Board Pattern

The above graph shows the power dissipation of the package at Tjmax = 125°C and Tjmax = 150°C. Operating the device in the hatched range might have a negative influence on its lifetime. The total hours of use and the total years of use must be limited as follows:

Total Hours of Use	Total Years of Use (4 hours/day)
13,000 hours	9 years

DM-DFN(PL)1820-6-JE-B

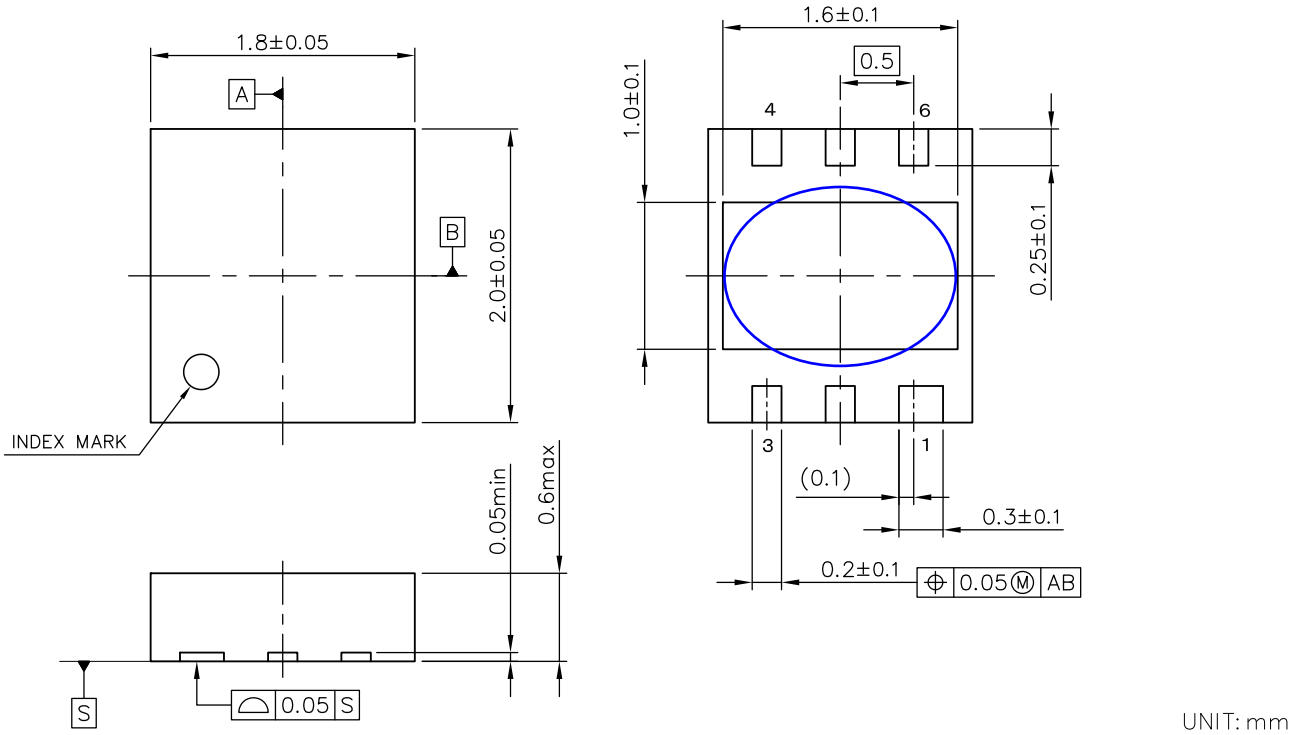

DFN(PL)1820-6 Package Dimensions

∗ The tab on the bottom of the package is substrate level (GND/V_{DD}). It is recommended that the tab be connected to the ground plane/the VDD pin on the board, or otherwise be left floating.

①②③④: Product Code ··· Refer to *Part Marking List*
⑤⑥: Lot Number ··· Alphanumeric Serial Number

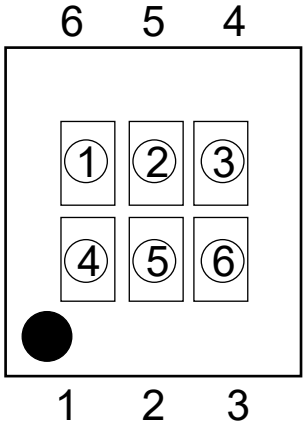

DFN(PLP)1820-6 Part Markings

NOTICE
There can be variation in the marking when different AOI (Automated Optical Inspection) equipment is used. In the case of recognizing the marking characteristic with AOI, please contact RICOH sales or our distributor before attempting to use AOI.

RP132Kxxxx Part Marking List

Product Name	①②③④	Product Name	①②③④	Product Name	①②③④	Product Name	①②③④
RP132K001B	CX00	RP132K001D	CY00	RP132K001E	DF00	RP132K001F	DG00
RP132K081B	CX08	RP132K081D	CY08	RP132K081E	DF08	RP132K081F	DG08
RP132K091B	CX09	RP132K091D	CY09	RP132K091E	DF09	RP132K091F	DG09
RP132K101B	CX10	RP132K101D	CY10	RP132K101E	DF10	RP132K101F	DG10
RP132K111B	CX11	RP132K111D	CY11	RP132K111E	DF11	RP132K111F	DG11
RP132K121B	CX12	RP132K121D	CY12	RP132K121E	DF12	RP132K121F	DG12
RP132K131B	CX13	RP132K131D	CY13	RP132K131E	DF13	RP132K131F	DG13
RP132K141B	CX14	RP132K141D	CY14	RP132K141E	DF14	RP132K141F	DG14
RP132K151B	CX15	RP132K151D	CY15	RP132K151E	DF15	RP132K151F	DG15
RP132K161B	CX16	RP132K161D	CY16	RP132K161E	DF16	RP132K161F	DG16
RP132K171B	CX17	RP132K171D	CY17	RP132K171E	DF17	RP132K171F	DG17
RP132K181B	CX18	RP132K181D	CY18	RP132K181E	DF18	RP132K181F	DG18
RP132K191B	CX19	RP132K191D	CY19	RP132K191E	DF19	RP132K191F	DG19
RP132K201B	CX20	RP132K201D	CY20	RP132K201E	DF20	RP132K201F	DG20
RP132K211B	CX21	RP132K211D	CY21	RP132K211E	DF21	RP132K211F	DG21
RP132K221B	CX22	RP132K221D	CY22	RP132K221E	DF22	RP132K221F	DG22
RP132K231B	CX23	RP132K231D	CY23	RP132K231E	DF23	RP132K231F	DG23
RP132K241B	CX24	RP132K241D	CY24	RP132K241E	DF24	RP132K241F	DG24
RP132K251B	CX25	RP132K251D	CY25	RP132K251E	DF25	RP132K251F	DG25
RP132K261B	CX26	RP132K261D	CY26	RP132K261E	DF26	RP132K261F	DG26
RP132K271B	CX27	RP132K271D	CY27	RP132K271E	DF27	RP132K271F	DG27
RP132K281B	CX28	RP132K281D	CY28	RP132K281E	DF28	RP132K281F	DG28
RP132K291B	CX29	RP132K291D	CY29	RP132K291E	DF29	RP132K291F	DG29
RP132K301B	CX30	RP132K301D	CY30	RP132K301E	DF30	RP132K301F	DG30
RP132K311B	CX31	RP132K311D	CY31	RP132K311E	DF31	RP132K311F	DG31
RP132K321B	CX32	RP132K321D	CY32	RP132K321E	DF32	RP132K321F	DG32
RP132K331B	CX33	RP132K331D	CY33	RP132K331E	DF33	RP132K331F	DG33
RP132K341B	CX34	RP132K341D	CY34	RP132K341E	DF34	RP132K341F	DG34
RP132K351B	CX35	RP132K351D	CY35	RP132K351E	DF35	RP132K351F	DG35
RP132K361B	CX36	RP132K361D	CY36	RP132K361E	DF36	RP132K361F	DG36
RP132K371B	CX37	RP132K371D	CY37	RP132K371E	DF37	RP132K371F	DG37
RP132K381B	CX38	RP132K381D	CY38	RP132K381E	DF38	RP132K381F	DG38
RP132K391B	CX39	RP132K391D	CY39	RP132K391E	DF39	RP132K391F	DG39
RP132K401B	CX40	RP132K401D	CY40	RP132K401E	DF40	RP132K401F	DG40
RP132K411B	CX41	RP132K411D	CY41	RP132K411E	DF41	RP132K411F	DG41
RP132K421B	CX42	RP132K421D	CY42	RP132K421E	DF42	RP132K421F	DG42
RP132K431B	CX43	RP132K431D	CY43	RP132K431E	DF43	RP132K431F	DG43
RP132K441B	CX44	RP132K441D	CY44	RP132K441E	DF44	RP132K441F	DG44
RP132K451B	CX45	RP132K451D	CY45	RP132K451E	DF45	RP132K451F	DG45
RP132K461B	CX46	RP132K461D	CY46	RP132K461E	DF46	RP132K461F	DG46
RP132K471B	CX47	RP132K471D	CY47	RP132K471E	DF47	RP132K471F	DG47
RP132K481B	CX48	RP132K481D	CY48	RP132K481E	DF48	RP132K481F	DG48
RP132K491B	CX49	RP132K491D	CY49	RP132K491E	DF49	RP132K491F	DG49
RP132K501B	CX50	RP132K501D	CY50	RP132K501E	DF50	RP132K501F	DG50
RP132K511B	CX51	RP132K511D	CY51	RP132K511E	DF51	RP132K511F	DG51
RP132K521B	CX52	RP132K521D	CY52	RP132K521E	DF52	RP132K521F	DG52
RP132K531B	CX53	RP132K531D	CY53	RP132K531E	DF53	RP132K531F	DG53
RP132K541B	CX54	RP132K541D	CY54	RP132K541E	DF54	RP132K541F	DG54
RP132K551B	CX55	RP132K551D	CY55	RP132K551E	DF55	RP132K551F	DG55
RP132K121B5	CX01	RP132K121D5	CY01	RP132K121E5	DF01	RP132K121F5	DG01
RP132K181B5	CX02	RP132K181D5	CY02	RP132K181E5	DF02	RP132K181F5	DG02
RP132K281B5	CX03	RP132K281D5	CY03	RP132K281E5	DF03	RP132K281F5	DG03
RP132K101B5	CX04	RP132K101D5	CY04	RP132K101E5	DF04	RP132K101F5	DG04

PD-SOT-89-5-(85125150)-JE-A

The power dissipation of the package is dependent on PCB material, layout, and environmental conditions. The following measurement conditions are based on JEDEC STD. 51-7.

Measurement Conditions

Item	Measurement Conditions
Environment	Mounting on Board (Wind Velocity = 0 m/s)
Board Material	Glass Cloth Epoxy Plastic (Four-Layer Board)
Board Dimensions	76.2 mm × 114.3 mm × 0.8 mm
Copper Ratio	Outer Layer (First Layer): Less than 95% of 50 mm Square Inner Layers (Second and Third Layers): Approx. 100% of 50 mm Square Outer Layer (Fourth Layer): Approx. 100% of 50 mm Square
Through-holes	ϕ 0.3 mm × 13 pcs

Measurement Result (Ta = 25°C, Tjmax = 125°C)

Item	Measurement Result
Power Dissipation	2600 mW
Thermal Resistance (θja)	θja = 38°C/W
Thermal Characterization Parameter (ψjt)	ψjt = 13°C/W

θja: Junction-to-Ambient Thermal Resistance

ψjt: Junction-to-Top Thermal Characterization Parameter

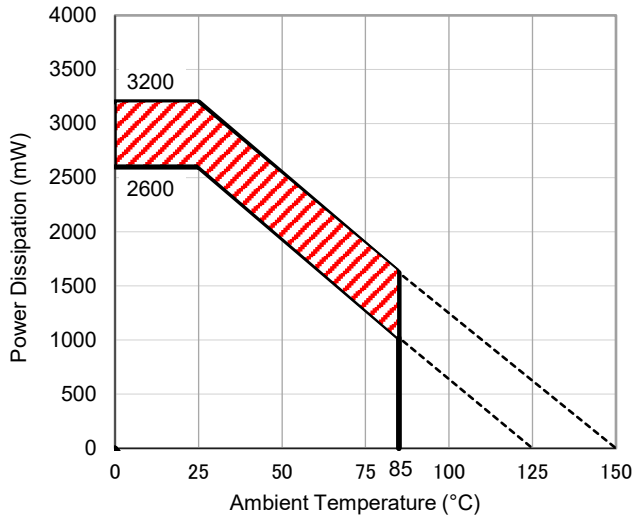

Power Dissipation vs. Ambient Temperature

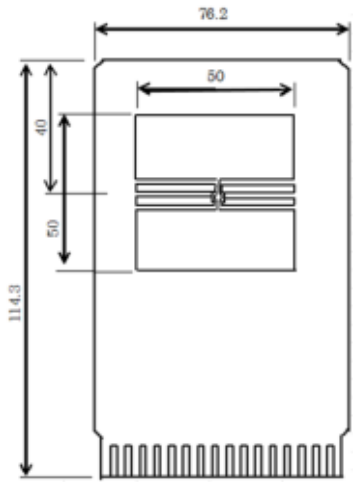

Measurement Board Pattern

The above graph shows the power dissipation of the package at Tjmax = 125°C and Tjmax = 150°C. Operating the device in the hatched range might have a negative influence on its lifetime. The total hours of use and the total years of use must be limited as follows:

Total Hours of Use	Total Years of Use (4 hours/day)
13,000 hours	9 years

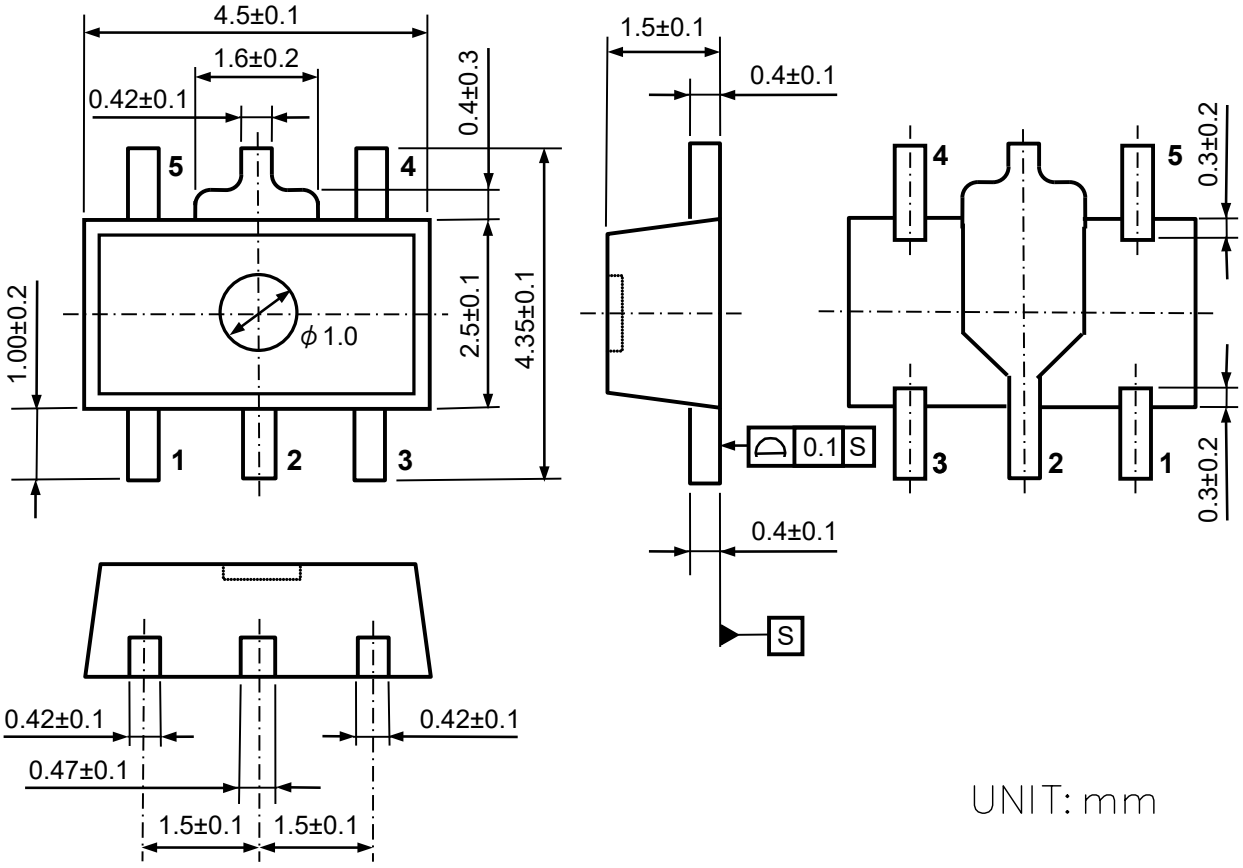

SOT-89-5 Package Dimensions

①②③④: Product Code ··· Refer to *Part Marking List*
⑤⑥: Lot Number ··· Alphanumeric Serial Number

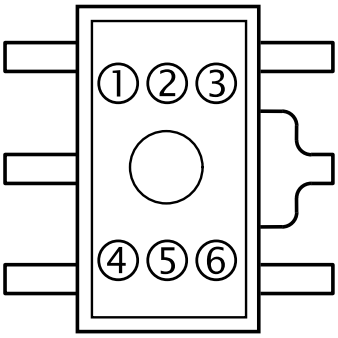

SOT-89-5 Part Markings

NOTICE
There can be variation in the marking when different AOI (Automated Optical Inspection) equipment is used. In the case of recognizing the marking characteristic with AOI, please contact RICOH sales or our distributor before attempting to use AOI.

RP132Hxxxx Part Marking List: Consumer Grade, Industrial Grade*

Product Name	①②③④	Product Name	①②③④
RP132H001B	C 0 0 B	RP132H001D	C 0 0 D
RP132H081B	C 0 8 B	RP132H081D	C 0 8 D
RP132H091B	C 0 9 B	RP132H091D	C 0 9 D
RP132H101B	C 1 0 B	RP132H101D	C 1 0 D
RP132H111B	C 1 1 B	RP132H111D	C 1 1 D
RP132H121B	C 1 2 B	RP132H121D	C 1 2 D
RP132H131B	C 1 3 B	RP132H131D	C 1 3 D
RP132H141B	C 1 4 B	RP132H141D	C 1 4 D
RP132H151B	C 1 5 B	RP132H151D	C 1 5 D
RP132H161B	C 1 6 B	RP132H161D	C 1 6 D
RP132H171B	C 1 7 B	RP132H171D	C 1 7 D
RP132H181B	C 1 8 B	RP132H181D	C 1 8 D
RP132H191B	C 1 9 B	RP132H191D	C 1 9 D
RP132H201B	C 2 0 B	RP132H201D	C 2 0 D
RP132H211B	C 2 1 B	RP132H211D	C 2 1 D
RP132H221B	C 2 2 B	RP132H221D	C 2 2 D
RP132H231B	C 2 3 B	RP132H231D	C 2 3 D
RP132H241B	C 2 4 B	RP132H241D	C 2 4 D
RP132H251B	C 2 5 B	RP132H251D	C 2 5 D
RP132H261B	C 2 6 B	RP132H261D	C 2 6 D
RP132H271B	C 2 7 B	RP132H271D	C 2 7 D
RP132H281B	C 2 8 B	RP132H281D	C 2 8 D
RP132H291B	C 2 9 B	RP132H291D	C 2 9 D
RP132H301B	C 3 0 B	RP132H301D	C 3 0 D
RP132H311B	C 3 1 B	RP132H311D	C 3 1 D
RP132H321B	C 3 2 B	RP132H321D	C 3 2 D
RP132H331B	C 3 3 B	RP132H331D	C 3 3 D
RP132H341B	C 3 4 B	RP132H341D	C 3 4 D
RP132H351B	C 3 5 B	RP132H351D	C 3 5 D
RP132H361B	C 3 6 B	RP132H361D	C 3 6 D
RP132H371B	C 3 7 B	RP132H371D	C 3 7 D
RP132H381B	C 3 8 B	RP132H381D	C 3 8 D
RP132H391B	C 3 9 B	RP132H391D	C 3 9 D
RP132H401B	C 4 0 B	RP132H401D	C 4 0 D
RP132H411B	C 4 1 B	RP132H411D	C 4 1 D
RP132H421B	C 4 2 B	RP132H421D	C 4 2 D
RP132H431B	C 4 3 B	RP132H431D	C 4 3 D
RP132H441B	C 4 4 B	RP132H441D	C 4 4 D
RP132H451B	C 4 5 B	RP132H451D	C 4 5 D
RP132H461B	C 4 6 B	RP132H461D	C 4 6 D
RP132H471B	C 4 7 B	RP132H471D	C 4 7 D
RP132H481B	C 4 8 B	RP132H481D	C 4 8 D
RP132H491B	C 4 9 B	RP132H491D	C 4 9 D
RP132H501B	C 5 0 B	RP132H501D	C 5 0 D
RP132H511B	C 5 1 B	RP132H511D	C 5 1 D
RP132H521B	C 5 2 B	RP132H521D	C 5 2 D
RP132H531B	C 5 3 B	RP132H531D	C 5 3 D
RP132H541B	C 5 4 B	RP132H541D	C 5 4 D
RP132H551B	C 5 5 B	RP132H551D	C 5 5 D
RP132H121B5	C 0 1 B	RP132H121D5	C 0 1 D
RP132H181B5	C 0 2 B	RP132H181D5	C 0 2 D
RP132H281B5	C 0 3 B	RP132H281D5	C 0 3 D
RP132H101B5	C 0 4 B	RP132H101D5	C 0 4 D

Ver. A

The power dissipation of the package is dependent on PCB material, layout, and environmental conditions. The following measurement conditions are based on JEDEC STD. 51-7.

Measurement Conditions

Item	Measurement Conditions
Environment	Mounting on Board (Wind Velocity = 0 m/s)
Board Material	Glass Cloth Epoxy Plastic (Four-Layer Board)
Board Dimensions	76.2 mm × 114.3 mm × 0.8 mm
Copper Ratio	Outer Layer (First Layer): Less than 95% of 50 mm Square Inner Layers (Second and Third Layers): Approx. 100% of 50 mm Square Outer Layer (Fourth Layer): Approx. 100% of 50 mm Square
Through-holes	ϕ 0.3 mm × 28 pcs

Measurement Result (Ta = 25°C, Tjmax = 125°C)

Item	Measurement Result
Power Dissipation	2700 mW
Thermal Resistance (θja)	θja = 37°C/W
Thermal Characterization Parameter (ψjt)	ψjt = 7°C/W

θja: Junction-to-Ambient Thermal Resistance

ψjt: Junction-to-Top Thermal Characterization Parameter

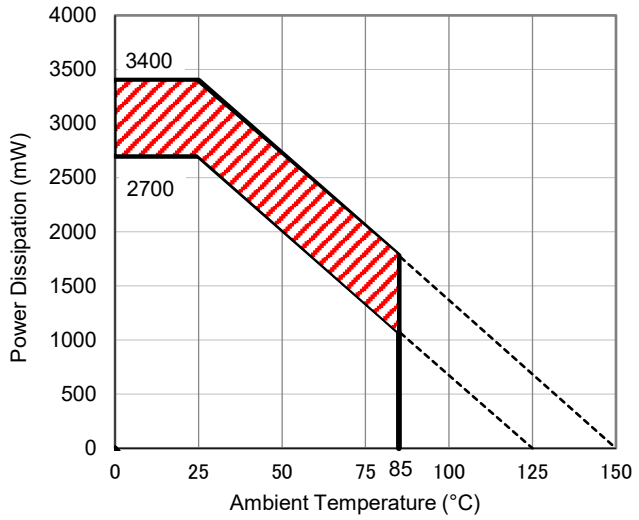

Power Dissipation vs. Ambient Temperature

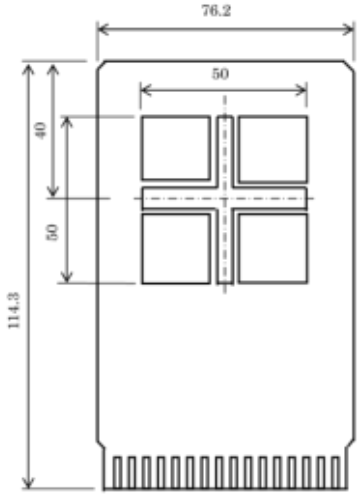

Measurement Board Pattern

The above graph shows the power dissipation of the package at Tjmax = 125°C and Tjmax = 150°C. Operating the device in the hatched range might have a negative influence on its lifetime. The total hours of use and the total years of use must be limited as follows:

Total Hours of Use	Total Years of Use (4 hours/day)
13,000 hours	9 years

DM-HSOP-6J-JE-A

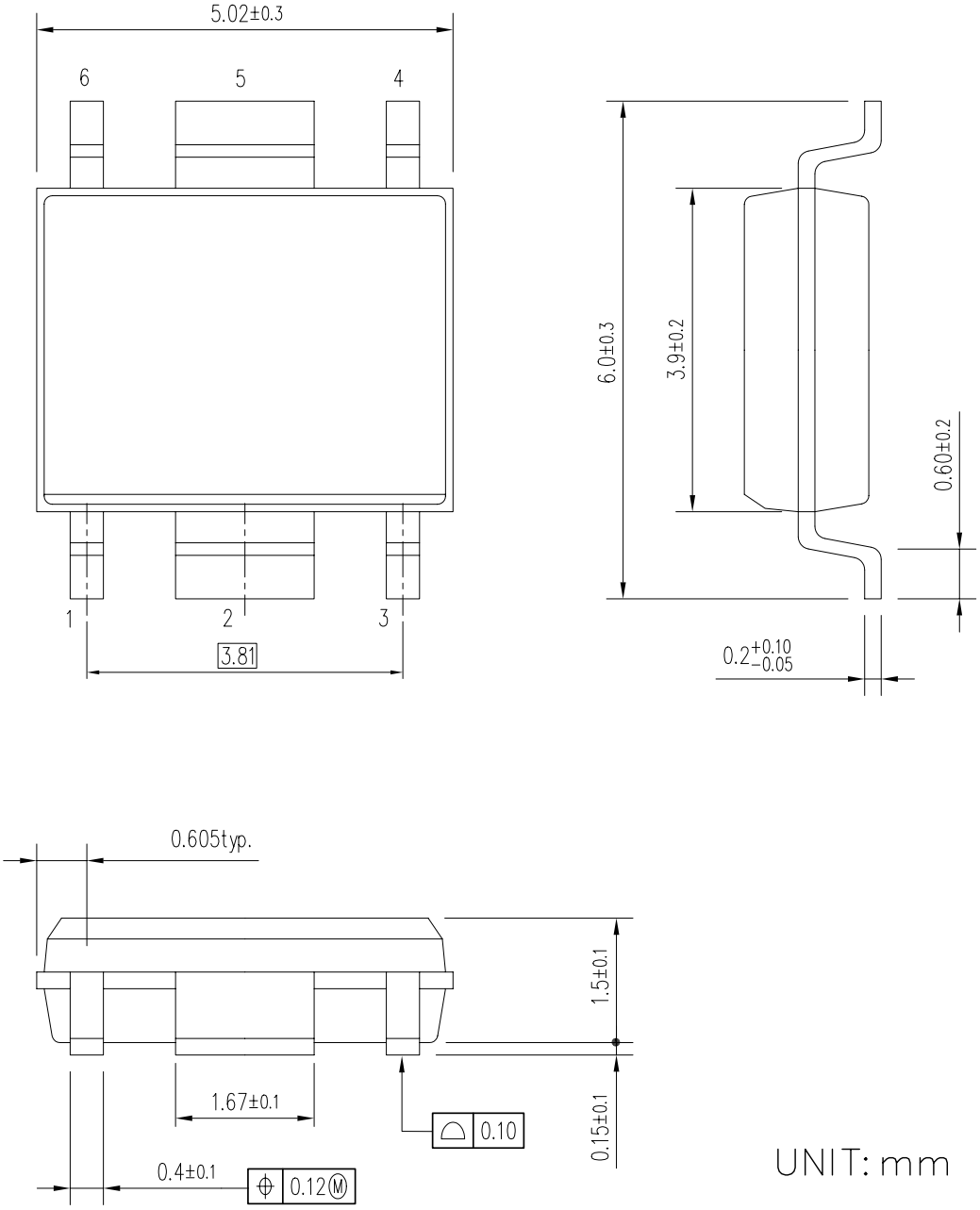

HSOP-6J Package Dimensions

①②③④: Product Code ··· Refer to *Part Marking List*
⑤⑥: Lot Number ··· Alphanumeric Serial Number

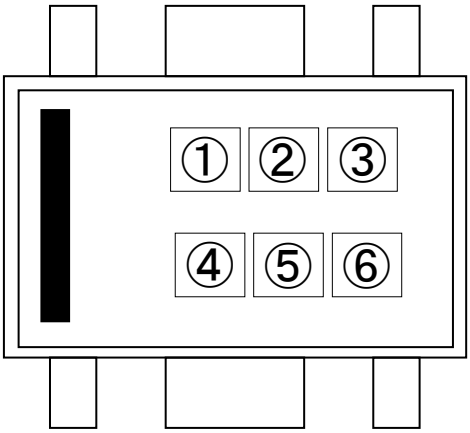

HSOP-6J Part Markings

NOTICE
There can be variation in the marking when different AOI (Automated Optical Inspection) equipment is used. In the case of recognizing the marking characteristic with AOI, please contact RICOH sales or our distributor before attempting to use AOI.

RP132Sxxxx Part Marking List

Product Name	①②③④	Product Name	①②③④	Product Name	①②③④	Product Name	①②③④
RP132S001B	Q00B	RP132S001D	Q00D	—	—	—	—
RP132S081B	Q08B	RP132S081D	Q08D	RP132S081E	Q08E	RP132S081F	Q08F
RP132S091B	Q09B	RP132S091D	Q09D	RP132S091E	Q09E	RP132S091F	Q09F
RP132S101B	Q10B	RP132S101D	Q10D	RP132S101E	Q10E	RP132S101F	Q10F
RP132S111B	Q11B	RP132S111D	Q11D	RP132S111E	Q11E	RP132S111F	Q11F
RP132S121B	Q12B	RP132S121D	Q12D	RP132S121E	Q12E	RP132S121F	Q12F
RP132S131B	Q13B	RP132S131D	Q13D	RP132S131E	Q13E	RP132S131F	Q13F
RP132S141B	Q14B	RP132S141D	Q14D	RP132S141E	Q14E	RP132S141F	Q14F
RP132S151B	Q15B	RP132S151D	Q15D	RP132S151E	Q15E	RP132S151F	Q15F
RP132S161B	Q16B	RP132S161D	Q16D	RP132S161E	Q16E	RP132S161F	Q16F
RP132S171B	Q17B	RP132S171D	Q17D	RP132S171E	Q17E	RP132S171F	Q17F
RP132S181B	Q18B	RP132S181D	Q18D	RP132S181E	Q18E	RP132S181F	Q18F
RP132S191B	Q19B	RP132S191D	Q19D	RP132S191E	Q19E	RP132S191F	Q19F
RP132S201B	Q20B	RP132S201D	Q20D	RP132S201E	Q20E	RP132S201F	Q20F
RP132S211B	Q21B	RP132S211D	Q21D	RP132S211E	Q21E	RP132S211F	Q21F
RP132S221B	Q22B	RP132S221D	Q22D	RP132S221E	Q22E	RP132S221F	Q22F
RP132S231B	Q23B	RP132S231D	Q23D	RP132S231E	Q23E	RP132S231F	Q23F
RP132S241B	Q24B	RP132S241D	Q24D	RP132S241E	Q24E	RP132S241F	Q24F
RP132S251B	Q25B	RP132S251D	Q25D	RP132S251E	Q25E	RP132S251F	Q25F
RP132S261B	Q26B	RP132S261D	Q26D	RP132S261E	Q26E	RP132S261F	Q26F
RP132S271B	Q27B	RP132S271D	Q27D	RP132S271E	Q27E	RP132S271F	Q27F
RP132S281B	Q28B	RP132S281D	Q28D	RP132S281E	Q28E	RP132S281F	Q28F
RP132S291B	Q29B	RP132S291D	Q29D	RP132S291E	Q29E	RP132S291F	Q29F
RP132S301B	Q30B	RP132S301D	Q30D	RP132S301E	Q30E	RP132S301F	Q30F
RP132S311B	Q31B	RP132S311D	Q31D	RP132S311E	Q31E	RP132S311F	Q31F
RP132S321B	Q32B	RP132S321D	Q32D	RP132S321E	Q32E	RP132S321F	Q32F
RP132S331B	Q33B	RP132S331D	Q33D	RP132S331E	Q33E	RP132S331F	Q33F
RP132S341B	Q34B	RP132S341D	Q34D	RP132S341E	Q34E	RP132S341F	Q34F
RP132S351B	Q35B	RP132S351D	Q35D	RP132S351E	Q35E	RP132S351F	Q35F
RP132S361B	Q36B	RP132S361D	Q36D	RP132S361E	Q36E	RP132S361F	Q36F
RP132S371B	Q37B	RP132S371D	Q37D	RP132S371E	Q37E	RP132S371F	Q37F
RP132S381B	Q38B	RP132S381D	Q38D	RP132S381E	Q38E	RP132S381F	Q38F
RP132S391B	Q39B	RP132S391D	Q39D	RP132S391E	Q39E	RP132S391F	Q39F
RP132S401B	Q40B	RP132S401D	Q40D	RP132S401E	Q40E	RP132S401F	Q40F
RP132S411B	Q41B	RP132S411D	Q41D	RP132S411E	Q41E	RP132S411F	Q41F
RP132S421B	Q42B	RP132S421D	Q42D	RP132S421E	Q42E	RP132S421F	Q42F
RP132S431B	Q43B	RP132S431D	Q43D	RP132S431E	Q43E	RP132S431F	Q43F
RP132S441B	Q44B	RP132S441D	Q44D	RP132S441E	Q44E	RP132S441F	Q44F
RP132S451B	Q45B	RP132S451D	Q45D	RP132S451E	Q45E	RP132S451F	Q45F
RP132S461B	Q46B	RP132S461D	Q46D	RP132S461E	Q46E	RP132S461F	Q46F
RP132S471B	Q47B	RP132S471D	Q47D	RP132S471E	Q47E	RP132S471F	Q47F
RP132S481B	Q48B	RP132S481D	Q48D	RP132S481E	Q48E	RP132S481F	Q48F
RP132S491B	Q49B	RP132S491D	Q49D	RP132S491E	Q49E	RP132S491F	Q49F
RP132S501B	Q50B	RP132S501D	Q50D	RP132S501E	Q50E	RP132S501F	Q50F
RP132S511B	Q51B	RP132S511D	Q51D	RP132S511E	Q51E	RP132S511F	Q51F
RP132S521B	Q52B	RP132S521D	Q52D	RP132S521E	Q52E	RP132S521F	Q52F
RP132S531B	Q53B	RP132S531D	Q53D	RP132S531E	Q53E	RP132S531F	Q53F
RP132S541B	Q54B	RP132S541D	Q54D	RP132S541E	Q54E	RP132S541F	Q54F
RP132S551B	Q55B	RP132S551D	Q55D	RP132S551E	Q55E	RP132S551F	Q55F
RP132S121B5	Q01B	RP132S121D5	Q01D	RP132S121E5	Q01E	RP132S121F5	Q01F
RP132S181B5	Q02B	RP132S181D5	Q02D	RP132S181E5	Q02E	RP132S181F5	Q02F
RP132S281B5	Q03B	RP132S281D5	Q03D	RP132S281E5	Q03E	RP132S281F5	Q03F
RP132S111B5	Q04B	RP132S111D5	Q04D	RP132S111E5	Q04E	RP132S111F5	Q04F
RP132S101B5	Q05B	RP132S101D5	Q05D	RP132S101E5	Q05E	RP132S101F5	Q05F

PD-TO-252-5-P2-(85125150)-JE-B

The power dissipation of the package is dependent on PCB material, layout, and environmental conditions. The following measurement conditions are based on JEDEC STD. 51.

Measurement Conditions

Item	Measurement Conditions
Environment	Mounting on Board (Wind Velocity = 0 m/s)
Board Material	Glass Cloth Epoxy Plastic (Four-Layer Board)
Board Dimensions	76.2 mm × 114.3 mm × 0.8 mm
Copper Ratio	Outer Layer (First Layer): Less than 95% of 50 mm Square Inner Layers (Second and Third Layers): Approx. 100% of 50 mm Square Outer Layer (Fourth Layer): Approx. 100% of 50 mm Square
Through-holes	ϕ 0.4 mm × 30 pcs

Measurement Result (Ta = 25°C, Tjmax = 125°C)

Item	Measurement Result
Power Dissipation	3800 mW
Thermal Resistance (θja)	θja = 26°C/W
Thermal Characterization Parameter (ψjt)	ψjt = 7°C/W

θja: Junction-to-Ambient Thermal Resistance
ψjt: Junction-to-Top Thermal Characterization Parameter

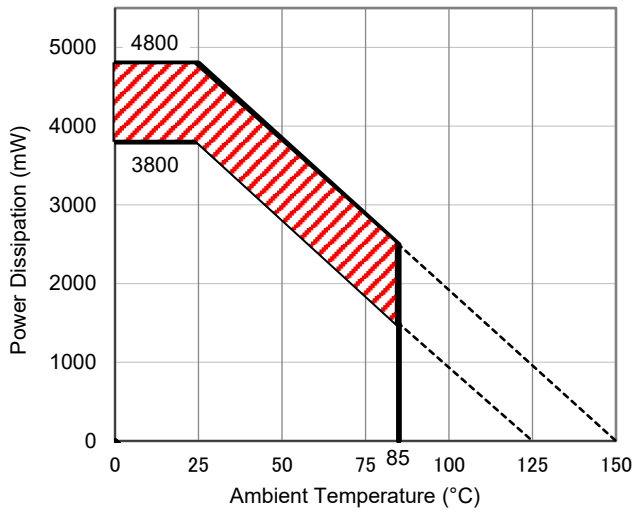

Power Dissipation vs. Ambient Temperature

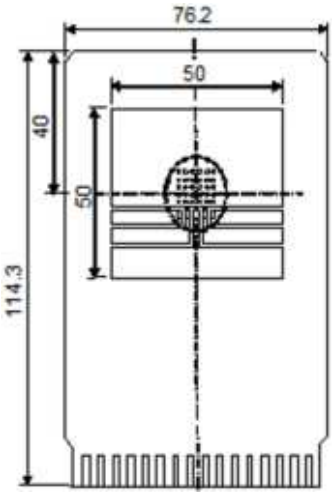

Measurement Board Pattern

The above graph shows the power dissipation of the package at Tjmax = 125°C and Tjmax = 150°C. Operating the device in the hatched range might have a negative influence on its lifetime. The total hours of use and the total years of use must be limited as follows:

Total Hours of Use	Total Years of Use (4 hours/day)
13,000 hours	9 years

DM-TO-252-5-P2-JE-C

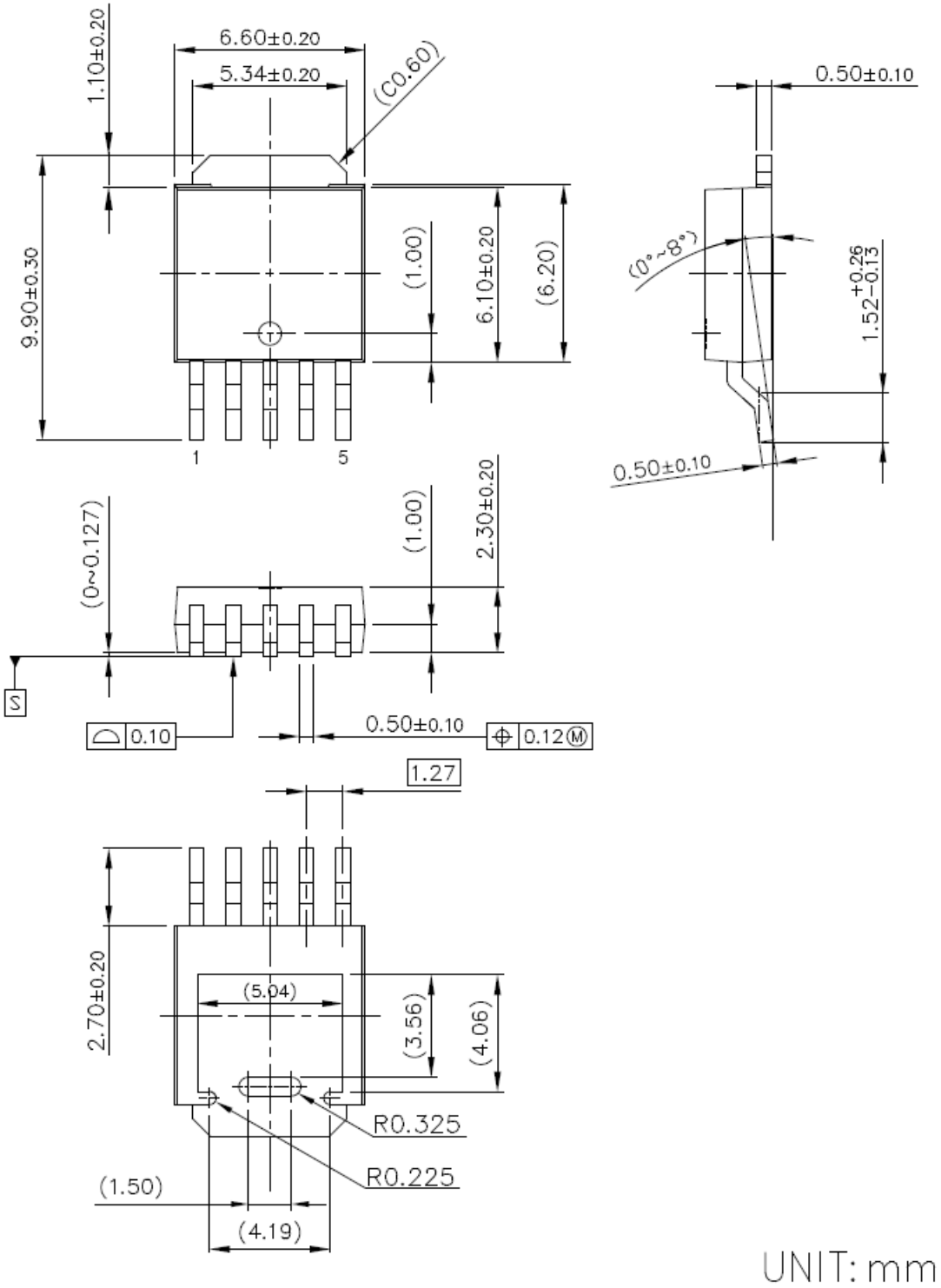

①②③④⑤⑥⑦⑧: Product Code ··· Refer to *Part Marking List*
⑨⑩: Lot Number ··· Alphanumeric Serial Number

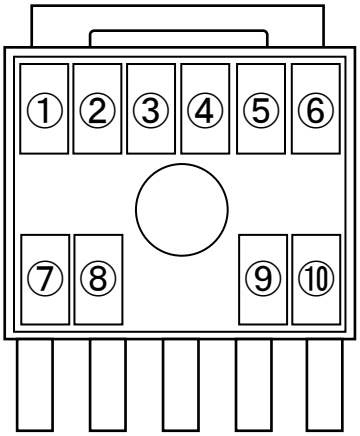

TO-252-5-P2 Part Markings

NOTICE
There can be variation in the marking when different AOI (Automated Optical Inspection) equipment is used. In the case of recognizing the marking characteristic with AOI, please contact RICOH sales or our distributor before attempting to use AOI.

R1561JxxxB Part Marking List

Product Name	①	②	③	④	⑤	⑥	⑦	⑧
RP132J001B	G	1	J	0	0	1	B	
RP132J081B	G	1	J	0	8	1	B	
RP132J091B	G	1	J	0	9	1	B	_
RP132J101B	G	1	J	1	0	1	B	
RP132J111B	G	1	J	1	1	1	B	
RP132J121B	G	1	J	1	2	1	B	_
RP132J131B	G	1	J	1	3	1	B	
RP132J141B	G	1	J	1	4	1	B	_
RP132J151B	G	1	J	1	5	1	B	
RP132J161B	G	1	J	1	6	1	B	_
RP132J171B	G	1	J	1	7	1	B	
RP132J181B	G	1	J	1	8	1	B	
RP132J191B	G	1	J	1	9	1	B	
RP132J201B	G	1	J	2	0	1	B	_
RP132J211B	G	1	J	2	1	1	B	
RP132J221B	G	1	J	2	2	1	B	
RP132J231B	G	1	J	2	3	1	B	_
RP132J241B	G	1	J	2	4	1	B	
RP132J251B	G	1	J	2	5	1	B	_
RP132J261B	G	1	J	2	6	1	B	
RP132J271B	G	1	J	2	7	1	B	_
RP132J281B	G	1	J	2	8	1	B	
RP132J291B	G	1	J	2	9	1	B	
RP132J301B	G	1	J	3	0	1	B	
RP132J311B	G	1	J	3	1	1	B	
RP132J321B	G	1	J	3	2	1	B	
RP132J331B	G	1	J	3	3	1	B	_
RP132J341B	G	1	J	3	4	1	B	_
RP132J351B	G	1	J	3	5	1	B	
RP132J361B	G	1	J	3	6	1	B	_
RP132J371B	G	1	J	3	7	1	B	
RP132J381B	G	1	J	3	8	1	B	_
RP132J391B	G	1	J	3	9	1	B	
RP132J401B	G	1	J	4	0	1	B	_
RP132J411B	G	1	J	4	1	1	B	
RP132J421B	G	1	J	4	2	1	B	
RP132J431B	G	1	J	4	3	1	B	
RP132J441B	G	1	J	4	4	1	B	
RP132J451B	G	1	J	4	5	1	B	
RP132J461B	G	1	J	4	6	1	B	
RP132J471B	G	1	J	4	7	1	B	
RP132J481B	G	1	J	4	8	1	B	
RP132J491B	G	1	J	4	9	1	B	
RP132J501B	G	1	J	5	0	1	B	
RP132J511B	G	1	J	5	1	1	B	
RP132J521B	G	1	J	5	2	1	B	
RP132J531B	G	1	J	5	3	1	B	
RP132J541B	G	1	J	5	4	1	B	
RP132J551B	G	1	J	5	5	1	B	
RP132J121B5	G	1	J	1	2	1	B	5
RP132J181B5	G	1	J	1	8	1	B	5
RP132J281B5	G	1	J	2	8	1	B	5
RP132J101B5	G	1	J	1	0	1	B	5

Product Name	①	②	③	④	⑤	⑥	⑦	⑧
RP132J001D	G	1	J	0	0	1	D	
RP132J081D	G	1	J	0	8	1	D	
RP132J091D	G	1	J	0	9	1	D	_
RP132J101D	G	1	J	1	0	1	D	
RP132J111D	G	1	J	1	1	1	D	
RP132J121D	G	1	J	1	2	1	D	_
RP132J131D	G	1	J	1	3	1	D	
RP132J141D	G	1	J	1	4	1	D	_
RP132J151D	G	1	J	1	5	1	D	
RP132J161D	G	1	J	1	6	1	D	_
RP132J171D	G	1	J	1	7	1	D	
RP132J181D	G	1	J	1	8	1	D	
RP132J191D	G	1	J	1	9	1	D	
RP132J201D	G	1	J	2	0	1	D	_
RP132J211D	G	1	J	2	1	1	D	
RP132J221D	G	1	J	2	2	1	D	
RP132J231D	G	1	J	2	3	1	D	_
RP132J241D	G	1	J	2	4	1	D	
RP132J251D	G	1	J	2	5	1	D	_
RP132J261D	G	1	J	2	6	1	D	
RP132J271D	G	1	J	2	7	1	D	_
RP132J281D	G	1	J	2	8	1	D	
RP132J291D	G	1	J	2	9	1	D	
RP132J301D	G	1	J	3	0	1	D	
RP132J311D	G	1	J	3	1	1	D	
RP132J321D	G	1	J	3	2	1	D	
RP132J331D	G	1	J	3	3	1	D	_
RP132J341D	G	1	J	3	4	1	D	_
RP132J351D	G	1	J	3	5	1	D	
RP132J361D	G	1	J	3	6	1	D	_
RP132J371D	G	1	J	3	7	1	D	
RP132J381D	G	1	J	3	8	1	D	_
RP132J391D	G	1	J	3	9	1	D	
RP132J401D	G	1	J	4	0	1	D	_
RP132J411D	G	1	J	4	1	1	D	
RP132J421D	G	1	J	4	2	1	D	
RP132J431D	G	1	J	4	3	1	D	
RP132J441D	G	1	J	4	4	1	D	_
RP132J451D	G	1	J	4	5	1	D	
RP132J461D	G	1	J	4	6	1	D	
RP132J471D	G	1	J	4	7	1	D	
RP132J481D	G	1	J	4	8	1	D	
RP132J491D	G	1	J	4	9	1	D	
RP132J501D	G	1	J	5	0	1	D	
RP132J511D	G	1	J	5	1	1	D	
RP132J521D	G	1	J	5	2	1	D	
RP132J531D	G	1	J	5	3	1	D	
RP132J541D	G	1	J	5	4	1	D	
RP132J551D	G	1	J	5	5	1	D	
RP132J121D5	G	1	J	1	2	1	D	5
RP132J181D5	G	1	J	1	8	1	D	5
RP132J281D5	G	1	J	2	8	1	D	5
RP132J101D5	G	1	J	1	0	1	D	5

1. The products and the product specifications described in this document are subject to change or discontinuation of production without notice for reasons such as improvement. Therefore, before deciding to use the products, please refer to our sales representatives for the latest information thereon.
2. The materials in this document may not be copied or otherwise reproduced in whole or in part without the prior written consent of us.
3. This product and any technical information relating thereto are subject to complementary export controls (so-called KNOW controls) under the Foreign Exchange and Foreign Trade Law, and related politics ministerial ordinance of the law. (Note that the complementary export controls are inapplicable to any application-specific products, except rockets and pilotless aircraft, that are insusceptible to design or program changes.) Accordingly, when exporting or carrying abroad this product, follow the Foreign Exchange and Foreign Trade Control Law and its related regulations with respect to the complementary export controls.
4. The technical information described in this document shows typical characteristics and example application circuits for the products. The release of such information is not to be construed as a warranty of or a grant of license under our or any third party's intellectual property rights or any other rights.
5. The products listed in this document are intended and designed for use as general electronic components in standard applications (office equipment, telecommunication equipment, measuring instruments, consumer electronic products, amusement equipment etc.). Those customers intending to use a product in an application requiring extreme quality and reliability, for example, in a highly specific application where the failure or misoperation of the product could result in human injury or death should first contact us.
   - Aerospace Equipment
   - Equipment Used in the Deep Sea
   - Power Generator Control Equipment (nuclear, steam, hydraulic, etc.)
   - Life Maintenance Medical Equipment
   - Fire Alarms / Intruder Detectors
   - Vehicle Control Equipment (automotive, airplane, railroad, ship, etc.)
   - Various Safety Devices
   - Traffic control system
   - Combustion equipment

   In case your company desires to use this product for any applications other than general electronic equipment mentioned above, make sure to contact our company in advance. Note that the important requirements mentioned in this section are not applicable to cases where operation requirements such as application conditions are confirmed by our company in writing after consultation with your company.
6. We are making our continuous effort to improve the quality and reliability of our products, but semiconductor products are likely to fail with certain probability. In order to prevent any injury to persons or damages to property resulting from such failure, customers should be careful enough to incorporate safety measures in their design, such as redundancy feature, fire containment feature and fail-safe feature. We do not assume any liability or responsibility for any loss or damage arising from misuse or inappropriate use of the products.
7. The products have been designed and tested to function within controlled environmental conditions. Do not use products under conditions that deviate from methods or applications specified in this datasheet. Failure to employ the products in the proper applications can lead to deterioration, destruction or failure of the products. We shall not be responsible for any bodily injury, fires or accident, property damage or any consequential damages resulting from misuse or misapplication of the products.
8. Quality Warranty

   8-1. Quality Warranty Period

   In the case of a product purchased through an authorized distributor or directly from us, the warranty period for this product shall be one (1) year after delivery to your company. For defective products that occurred during this period, we will take the quality warranty measures described in section 8-2. However, if there is an agreement on the warranty period in the basic transaction agreement, quality assurance agreement, delivery specifications, etc., it shall be followed.

   8-2. Quality Warranty Remedies

   When it has been proved defective due to manufacturing factors as a result of defect analysis by us, we will either deliver a substitute for the defective product or refund the purchase price of the defective product.

   Note that such delivery or refund is sole and exclusive remedies to your company for the defective product.

   8-3. Remedies after Quality Warranty Period

   With respect to any defect of this product found after the quality warranty period, the defect will be analyzed by us. On the basis of the defect analysis results, the scope and amounts of damage shall be determined by mutual agreement of both parties. Then we will deal with upper limit in Section 8-2. This provision is not intended to limit any legal rights of your company.
9. Anti-radiation design is not implemented in the products described in this document.
10. The X-ray exposure can influence functions and characteristics of the products. Confirm the product functions and characteristics in the evaluation stage.
11. WLCSP products should be used in light shielded environments. The light exposure can influence functions and characteristics of the products under operation or storage.
12. Warning for handling Gallium and Arsenic (GaAs) products (Applying to GaAs MMIC, Photo Reflector). These products use Gallium (Ga) and Arsenic (As) which are specified as poisonous chemicals by law. For the prevention of a hazard, do not burn, destroy, or process chemically to make them as gas or power. When the product is disposed of, please follow the related regulation and do not mix this with general industrial waste or household waste.
13. Please contact our sales representatives should you have any questions or comments concerning the products or the technical information.

NISSHINBO

Nisshinbo Micro Devices Inc.

Official website

https://www.nisshinbo-microdevices.co.jp/en/

Purchase information

https://www.nisshinbo-microdevices.co.jp/en/buy/