- **Operating Voltage Range of 4.5 V to 5.5 V**
- **State-of-the-Art BiCMOS Design Significantly Reduces I_{CCZ}**
- **Output Ports Have Equivalent 33-Ω Series Resistors, So No External Resistors Are Required**
- **3-State Outputs Drive Bus Lines or Buffer Memory Address Registers**

SN54BCT2244 . . . J OR W PACKAGE
SN74BCT2244 . . . DW, N, OR NS PACKAGE
(TOP VIEW)

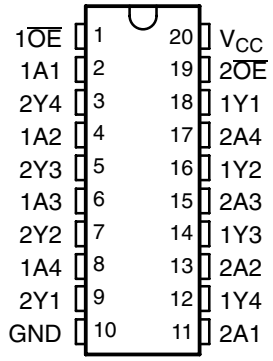

SN54BCT2244 . . . FK PACKAGE
(TOP VIEW)

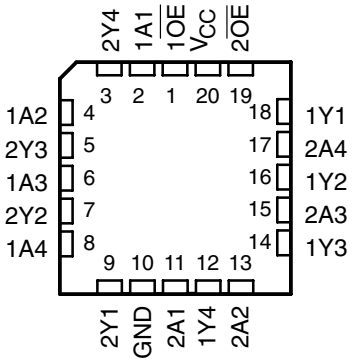

description/ordering information

The ’BCT2244 devices are designed specifically to improve both the performance and density of 3-state memory address drivers, clock drivers, and bus-oriented receivers and transmitters. Together with the ’BCT2240 devices and SN74BCT2241, these devices provide the choice of selected combinations of inverting and noninverting outputs, symmetrical active-low output-enable ($\overline{OE}$) inputs, and complementary OE and $\overline{OE}$ inputs. These devices feature high fan-out and improved fan-in.

To ensure the high-impedance state during power up or power down, $\overline{OE}$ should be tied to V_{CC} through a pullup resistor; the minimum value of the resistor is determined by the current-sinking capability of the driver.

The outputs, which are designed to source or sink up to 12 mA, include 33-Ω series resistors to reduce overshoot and undershoot.

ORDERING INFORMATION

T_A	PACKAGE†		ORDERABLE PART NUMBER	TOP-SIDE MARKING
0°C to 70°C	PDIP – N	Tube	SN74BCT2244N	SN74BCT2244N
	SOIC – DW	Tube	SN74BCT2244DW	BCT2244
		Tape and reel	SN74BCT2244DWR	
	SOP – NS	Tape and reel	SN74BCT2244NSR	BCT2244
–55°C to 125°C	CDIP – J	Tube	SNJ54BCT2244J	SNJ54BCT2244J
	CFP – W	Tube	SNJ54BCT2244W	SNJ54BCT2244W
	LCCC – FK	Tube	SNJ54BCT2244FK	SNJ54BCT2244FK

† Package drawings, standard packing quantities, thermal data, symbolization, and PCB design guidelines are available at www.ti.com/sc/package.

Please be aware that an important notice concerning availability, standard warranty, and use in critical applications of Texas Instruments semiconductor products and disclaimers thereto appears at the end of this data sheet.

PRODUCTION DATA information is current as of publication date. Products conform to specifications per the terms of Texas Instruments standard warranty. Production processing does not necessarily include testing of all parameters.

Copyright © 2003, Texas Instruments Incorporated
On products compliant to MIL-PRF-38535, all parameters are tested unless otherwise noted. On all other products, production processing does not necessarily include testing of all parameters.

FUNCTION TABLE
(each buffer)

INPUTS		OUTPUT
$\overline{OE}$	A	Y
L	H	H
L	L	L
H	X	Z

logic diagram (positive logic)

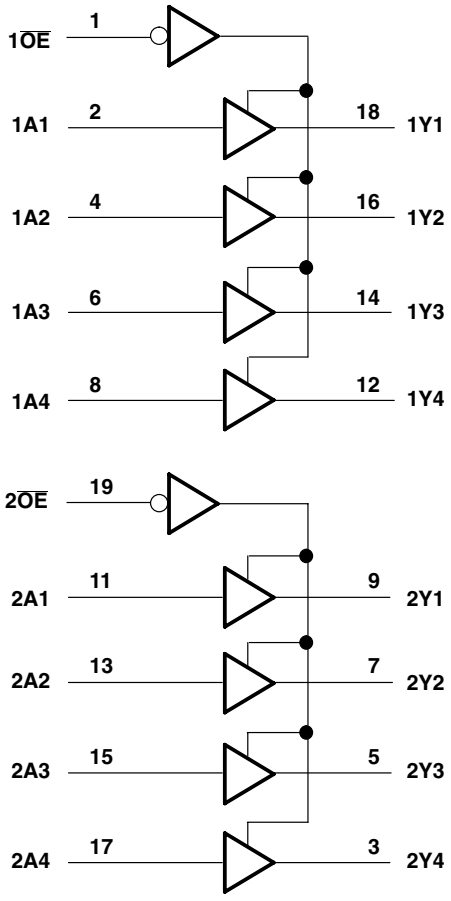

schematic of Y outputs

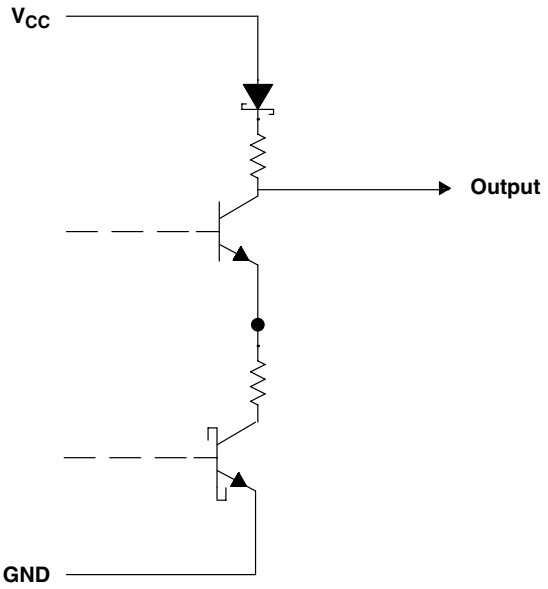

absolute maximum ratings over operating free-air temperature range (unless otherwise noted)†

Supply voltage range, V_{CC} . . . . . –0.5 V to 7 V
Input voltage range, V_I (see Note 1) . . . . . –0.5 V to 7 V
Voltage range applied to any output in the disabled or power-off state, V_O . . . . . –0.5 V to 5.5 V
Voltage range applied to any output in the high state, V_O . . . . . –0.5 V to V_{CC}
Input clamp current, I_{IK} . . . . . –30 mA
Current into any output in the low state, I_O . . . . . 24 mA
Package thermal impedance, θ_{JA} (see Note 2): DW package . . . . . 58°C/W
N package . . . . . 69°C/W
NS package . . . . . 60°C/W
Storage temperature range, T_{stg} . . . . . –65°C to 150°C

† Stresses beyond those listed under “absolute maximum ratings” may cause permanent damage to the device. These are stress ratings only, and functional operation of the device at these or any other conditions beyond those indicated under “recommended operating conditions” is not implied. Exposure to absolute-maximum-rated conditions for extended periods may affect device reliability.

NOTES: 1. The input and output voltage ratings may be exceeded if the input and output current ratings are observed.
2. The package thermal impedance is calculated in accordance with JESD 51-7.

recommended operating conditions(see Note 3)

		SN54BCT2244			SN74BCT2244			UNIT
		MIN	NOM	MAX	MIN	NOM	MAX	
V_{CC}	Supply voltage	4.5	5	5.5	4.5	5	5.5	V
V_{IH}	High-level input voltage	2			2			V
V_{IL}	Low-level input voltage			0.8			0.8	V
I_{IK}	Input clamp current			–18			–18	mA
I_{OH}	High-level output current			–12			–12	mA
I_{OL}	Low-level output current			12			12	mA
T_A	Operating free-air temperature	–55		125	0		70	°C

NOTE 3: All unused inputs of the device must be held at V_{CC} or GND to ensure proper device operation. Refer to the TI application report, *Implications of Slow or Floating CMOS Inputs*, literature number SCBA004.

electrical characteristics over recommended operating free-air temperature range (unless otherwise noted)

PARAMETER	TEST CONDITIONS		SN54BCT2244			SN74BCT2244			UNIT
			MIN	TYP†	MAX	MIN	TYP†	MAX	
V_{IK}	V_{CC} = 4.5 V,	I_I = –18 mA			–1.2			–1.2	V
V_{OH}	V_{CC} = 4.5 V	I_{OH} = –1 mA	2.4			2.4			V
		I_{OH} = –12 mA	2			2			
V_{OL}	V_{CC} = 4.5 V	I_{OL} = 1 mA		0.15	0.5		0.15	0.5	V
		I_{OL} = 12 mA		0.35	0.8		0.35	0.8	
I_I	V_{CC} = 5.5 V,	V_I = 7 V			0.1			0.1	mA
I_{IH}	V_{CC} = 5.5 V,	V_I = 2.7 V			20			20	µA
I_{IL}	V_{CC} = 5.5 V,	V_I = 0.5 V			–1			–1	mA
I_{OZH}	V_{CC} = 5.5 V,	V_O = 2.7 V			50			50	µA
I_{OZL}	V_{CC} = 5.5 V,	V_O = 0.5 V			–50			–50	µA
I_{OS}‡	V_{CC} = 5.5 V,	V_O = 0	–100		–225	–100		–225	mA
I_{CCH}	V_{CC} = 5.5 V,	Outputs open		23	37		23	37	mA
I_{CCL}	V_{CC} = 5.5 V,	Outputs open		53	77		53	77	mA
I_{CCZ}	V_{CC} = 5.5 V,	Outputs open		6.5	10		6.5	10	mA
C_i	V_{CC} = 5 V,	V_I = 2.5 V or 0.5 V		6			6		pF
C_o	V_{CC} = 5 V,	V_O = 2.5 V or 0.5 V		11			11		pF

† All typical values are at V_{CC} = 5 V, T_A = 25°C.
‡ Not more than one output should be tested at a time, and the duration of the test should not exceed one second.

switching characteristics over recommended ranges of supply voltage and operating free-air temperature, C_L = 50 pF (unless otherwise noted) (see Figure 1)

PARAMETER	FROM (INPUT)	TO (OUTPUT)	V_{CC} = 5 V, T_A = 25°C			SN54BCT2244		SN74BCT2244		UNIT
			MIN	TYP	MAX	MIN	MAX	MIN	MAX	
t_{PLH}	A	Y	0.5	3	4.4	0.5	5.2	0.5	4.9	ns
t_{PHL}			1.6	4.6	6.3	1.6	7.1	1.6	6.7	
t_{PZH}	$\overline{OE}$	Y	2.4	6.1	7.7	2.4	9.1	2.4	8.7	ns
t_{PZL}			3.9	7.6	9.4	3.9	10.8	3.9	10.4	
t_{PHZ}	$\overline{OE}$	Y	1.7	5.2	6.9	1.7	8.1	1.7	7.8	ns
t_{PLZ}			2.8	6.5	8.3	2.8	10.9	2.8	9.8	

PARAMETER MEASUREMENT INFORMATION

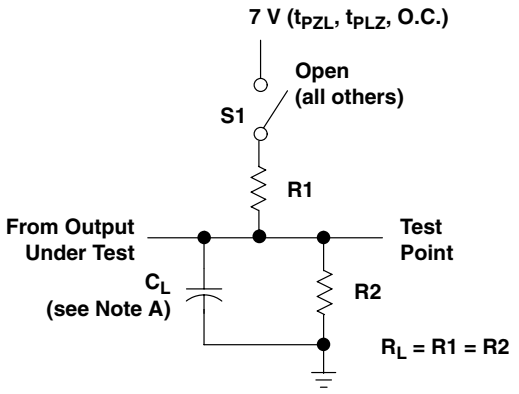

**LOAD CIRCUIT FOR
3-STATE AND OPEN-COLLECTOR OUTPUTS**

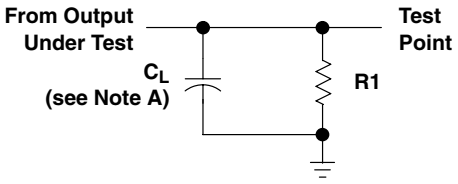

**LOAD CIRCUIT FOR
TOTEM-POLE OUTPUTS**

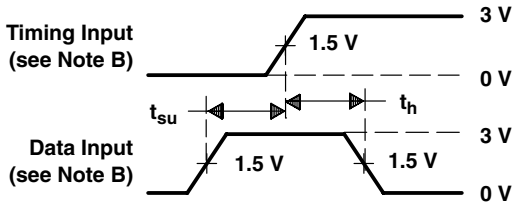

**VOLTAGE WAVEFORMS
SETUP AND HOLD TIMES**

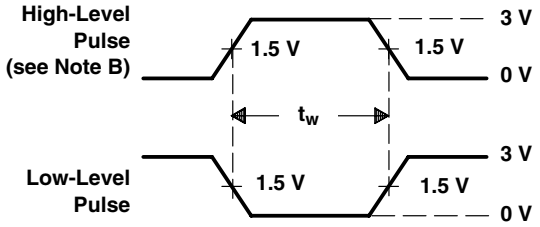

**VOLTAGE WAVEFORMS
PULSE DURATION**

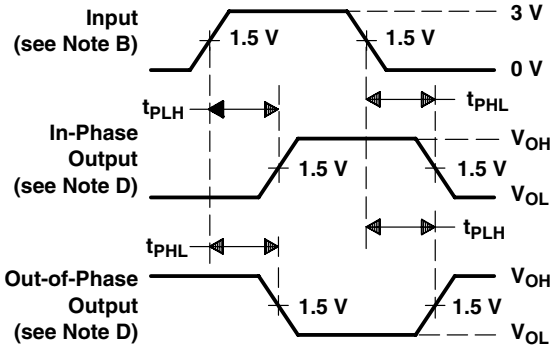

**VOLTAGE WAVEFORMS
PROPAGATION DELAY TIMES (see Note D)**

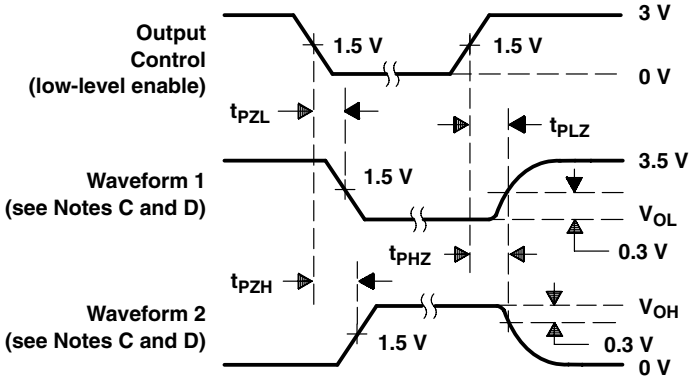

**VOLTAGE WAVEFORMS
ENABLE AND DISABLE TIMES, 3-STATE OUTPUTS**

NOTES: A. C_L includes probe and jig capacitance.
B. All input pulses are supplied by generators having the following characteristics: PRR ≤ 10 MHz, $t_r = t_f \leq$ 2.5 ns, duty cycle = 50%.
C. Waveform 1 is for an output with internal conditions such that the output is low except when disabled by the output control.
Waveform 2 is for an output with internal conditions such that the output is high except when disabled by the output control.
D. The outputs are measured one at a time with one transition per measurement.
E. When measuring propagation delay times of 3-state outputs, switch S1 is open.
F. All parameters and waveforms are not applicable to all devices.

Figure 1. Load Circuit and Voltage Waveforms

PACKAGING INFORMATION

Orderable part number	Status (1)	Material type (2)	Package | Pins	Package qty | Carrier	RoHS (3)	Lead finish/ Ball material (4)	MSL rating/ Peak reflow (5)	Op temp (°C)	Part marking (6)
5962-9074101M2A	Active	Production	LCCC (FK) | 20	55 | TUBE	No	SNPB	N/A for Pkg Type	-55 to 125	5962-9074101M2A SNJ54BCT 2244FK
5962-9074101MRA	Active	Production	CDIP (J) | 20	20 | TUBE	No	SNPB	N/A for Pkg Type	-55 to 125	5962-9074101MRA SNJ54BCT2244J
SN74BCT2244DW	Active	Production	SOIC (DW) | 20	25 | TUBE	Yes	NIPDAU	Level-1-260C-UNLIM	0 to 70	BCT2244
SN74BCT2244DW.A	Active	Production	SOIC (DW) | 20	25 | TUBE	Yes	NIPDAU	Level-1-260C-UNLIM	0 to 70	BCT2244
SN74BCT2244N	Active	Production	PDIP (N) | 20	20 | TUBE	Yes	NIPDAU	N/A for Pkg Type	0 to 70	SN74BCT2244N
SN74BCT2244N.A	Active	Production	PDIP (N) | 20	20 | TUBE	Yes	NIPDAU	N/A for Pkg Type	0 to 70	SN74BCT2244N
SNJ54BCT2244FK	Active	Production	LCCC (FK) | 20	55 | TUBE	No	SNPB	N/A for Pkg Type	-55 to 125	5962-9074101M2A SNJ54BCT 2244FK
SNJ54BCT2244FK.A	Active	Production	LCCC (FK) | 20	55 | TUBE	No	SNPB	N/A for Pkg Type	-55 to 125	5962-9074101M2A SNJ54BCT 2244FK
SNJ54BCT2244J	Active	Production	CDIP (J) | 20	20 | TUBE	No	SNPB	N/A for Pkg Type	-55 to 125	5962-9074101MRA SNJ54BCT2244J
SNJ54BCT2244J.A	Active	Production	CDIP (J) | 20	20 | TUBE	No	SNPB	N/A for Pkg Type	-55 to 125	5962-9074101MRA SNJ54BCT2244J

(1) **Status:** For more details on status, see our product life cycle.

(2) **Material type:** When designated, preproduction parts are prototypes/experimental devices, and are not yet approved or released for full production. Testing and final process, including without limitation quality assurance, reliability performance testing, and/or process qualification, may not yet be complete, and this item is subject to further changes or possible discontinuation. If available for ordering, purchases will be subject to an additional waiver at checkout, and are intended for early internal evaluation purposes only. These items are sold without warranties of any kind.

(3) **RoHS values:** Yes, No, RoHS Exempt. See the TI RoHS Statement for additional information and value definition.

(4) Lead finish/Ball material: Parts may have multiple material finish options. Finish options are separated by a vertical ruled line. Lead finish/Ball material values may wrap to two lines if the finish value exceeds the maximum column width.

(5) MSL rating/Peak reflow: The moisture sensitivity level ratings and peak solder (reflow) temperatures. In the event that a part has multiple moisture sensitivity ratings, only the lowest level per JEDEC standards is shown. Refer to the shipping label for the actual reflow temperature that will be used to mount the part to the printed circuit board.

(6) Part marking: There may be an additional marking, which relates to the logo, the lot trace code information, or the environmental category of the part.

Multiple part markings will be inside parentheses. Only one part marking contained in parentheses and separated by a "~" will appear on a part. If a line is indented then it is a continuation of the previous line and the two combined represent the entire part marking for that device.

Important Information and Disclaimer: The information provided on this page represents TI's knowledge and belief as of the date that it is provided. TI bases its knowledge and belief on information provided by third parties, and makes no representation or warranty as to the accuracy of such information. Efforts are underway to better integrate information from third parties. TI has taken and continues to take reasonable steps to provide representative and accurate information but may not have conducted destructive testing or chemical analysis on incoming materials and chemicals. TI and TI suppliers consider certain information to be proprietary, and thus CAS numbers and other limited information may not be available for release.

In no event shall TI's liability arising out of such information exceed the total purchase price of the TI part(s) at issue in this document sold by TI to Customer on an annual basis.

OTHER QUALIFIED VERSIONS OF SN54BCT2244, SN74BCT2244 :

- Catalog : SN74BCT2244
- Military : SN54BCT2244

NOTE: Qualified Version Definitions:

- Catalog - TI's standard catalog product
- Military - QML certified for Military and Defense Applications

TUBE

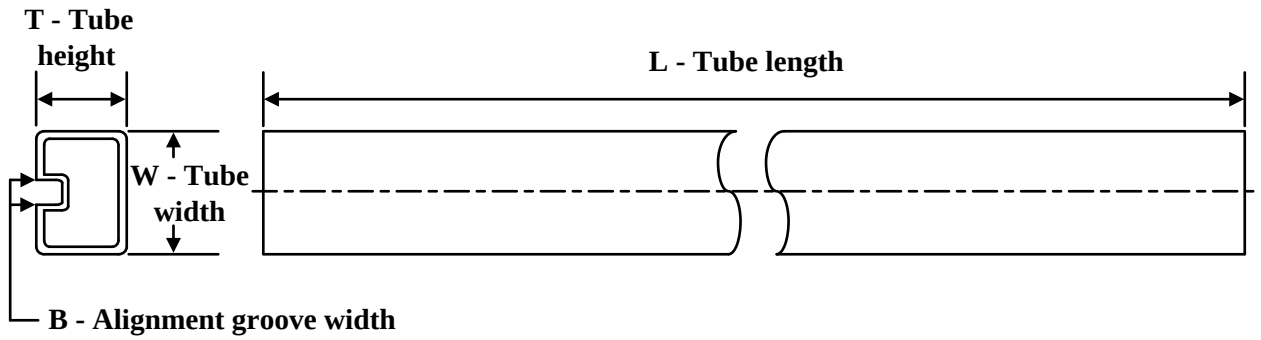

*All dimensions are nominal

Device	Package Name	Package Type	Pins	SPQ	L (mm)	W (mm)	T (µm)	B (mm)
5962-9074101M2A	FK	LCCC	20	55	506.98	12.06	2030	NA
SN74BCT2244DW	DW	SOIC	20	25	507	12.83	5080	6.6
SN74BCT2244DW.A	DW	SOIC	20	25	507	12.83	5080	6.6
SN74BCT2244N	N	PDIP	20	20	506	13.97	11230	4.32
SN74BCT2244N.A	N	PDIP	20	20	506	13.97	11230	4.32
SNJ54BCT2244FK	FK	LCCC	20	55	506.98	12.06	2030	NA
SNJ54BCT2244FK.A	FK	LCCC	20	55	506.98	12.06	2030	NA

GENERIC PACKAGE VIEW

FK 20

LCCC - 2.03 mm max height

8.89 x 8.89, 1.27 mm pitch

LEADLESS CERAMIC CHIP CARRIER

This image is a representation of the package family, actual package may vary.
Refer to the product data sheet for package details.

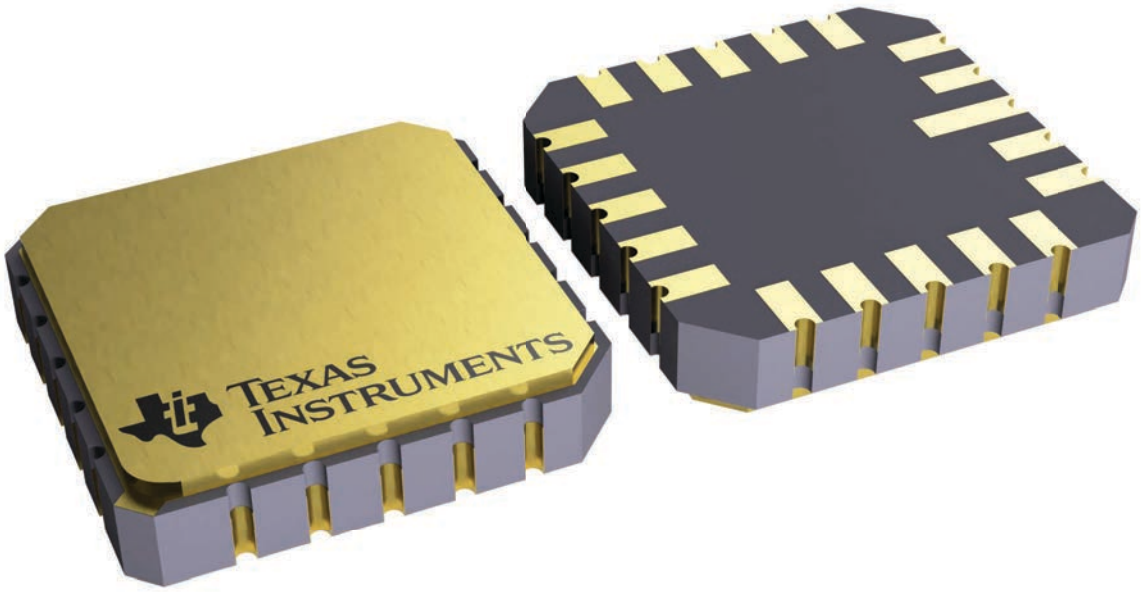

4229370VA\

N (R–PDIP–T**)

PLASTIC DUAL–IN–LINE PACKAGE

16 PINS SHOWN

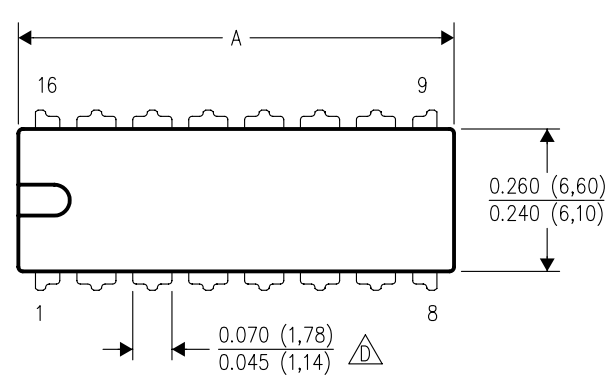

DIM \ PINS **	14	16	18	20
A MAX	0.775 (19,69)	0.775 (19,69)	0.920 (23,37)	1.060 (26,92)
A MIN	0.745 (18,92)	0.745 (18,92)	0.850 (21,59)	0.940 (23,88)
MS–001 VARIATION (C)	AA	BB	AC	AD

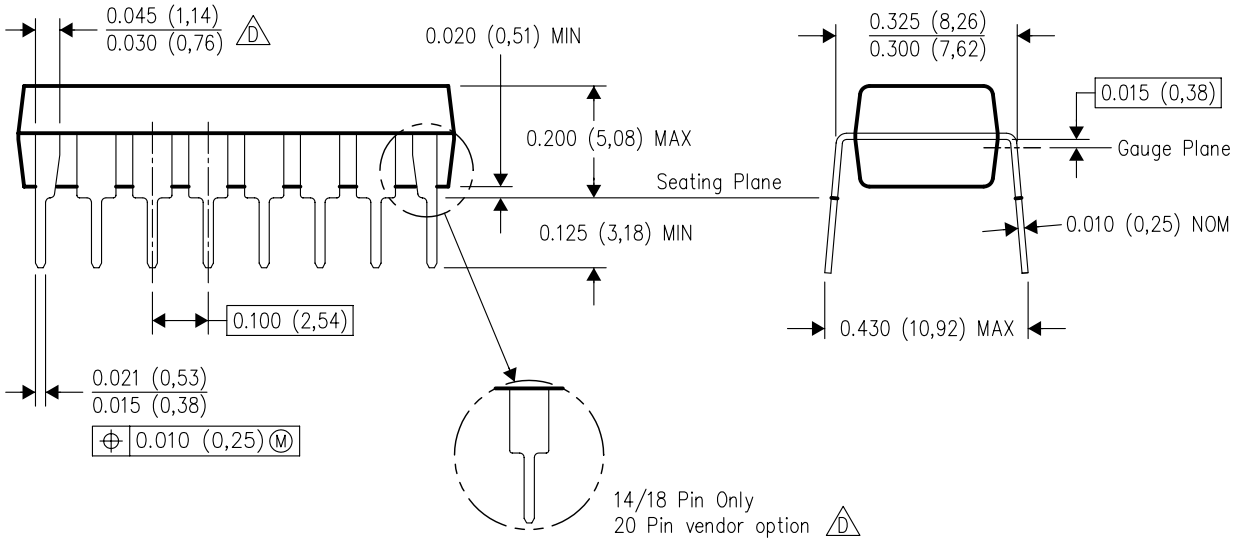

4040049/E 12/2002

NOTES:
A. All linear dimensions are in inches (millimeters).
B. This drawing is subject to change without notice.
C. Falls within JEDEC MS–001, except 18 and 20 pin minimum body length (Dim A).
D. The 20 pin end lead shoulder width is a vendor option, either half or full width.

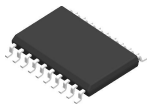

PACKAGE OUTLINE

DW0020A

SOIC - 2.65 mm max height

SOIC

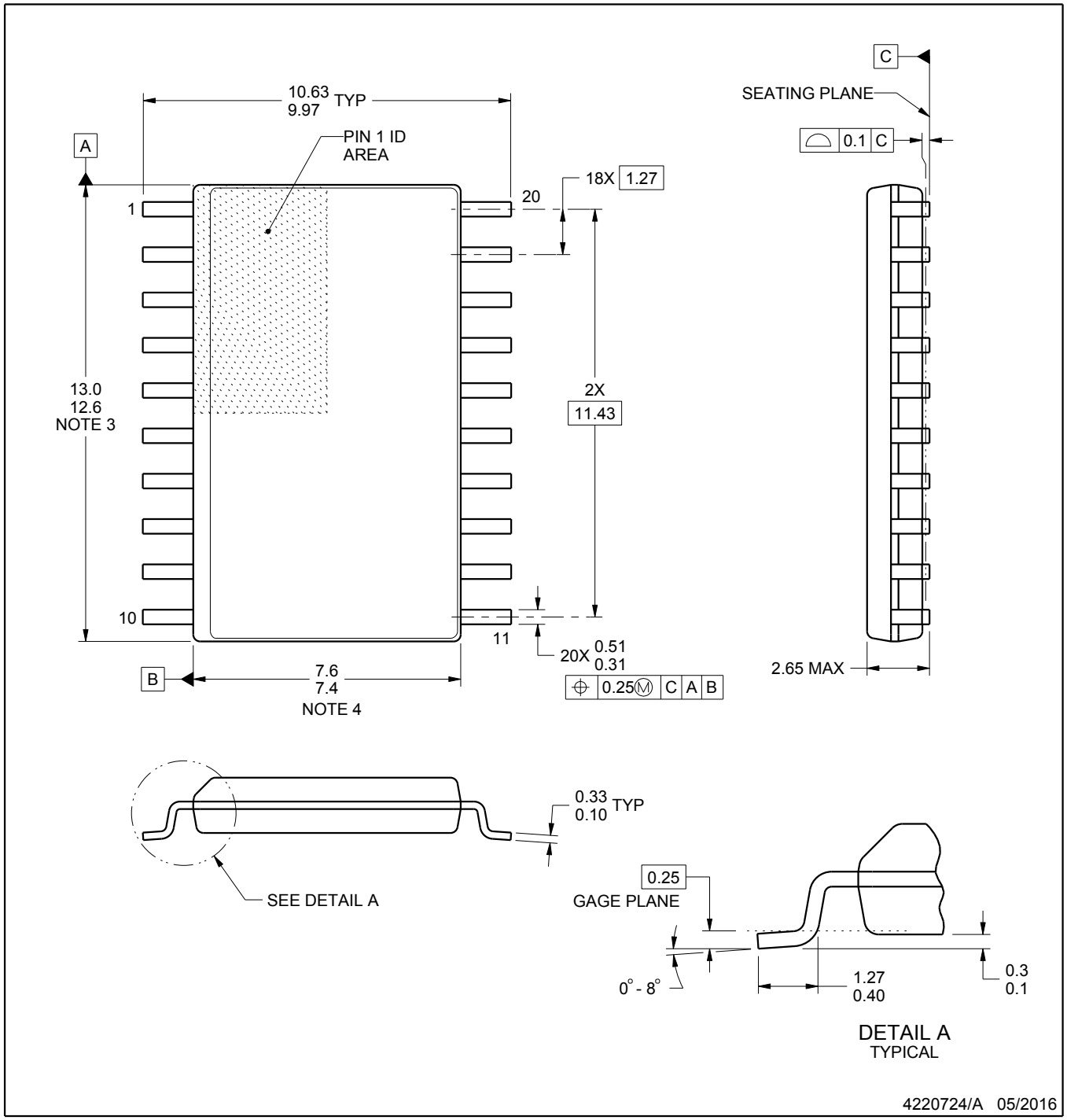

NOTES:

1. All linear dimensions are in millimeters. Dimensions in parenthesis are for reference only. Dimensioning and tolerancing per ASME Y14.5M.
2. This drawing is subject to change without notice.
3. This dimension does not include mold flash, protrusions, or gate burrs. Mold flash, protrusions, or gate burrs shall not exceed 0.15 mm per side.
4. This dimension does not include interlead flash. Interlead flash shall not exceed 0.43 mm per side.
5. Reference JEDEC registration MS-013.

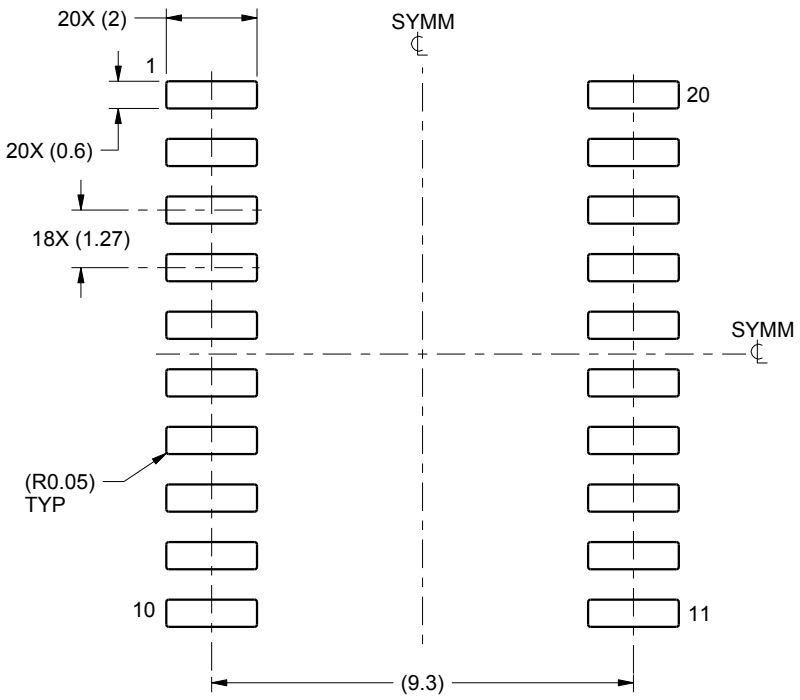

LAND PATTERN EXAMPLE
SCALE:6X

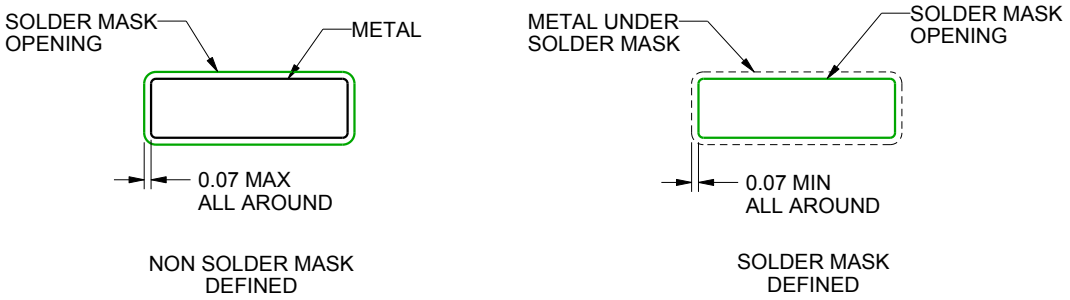

SOLDER MASK DETAILS

4220724/A 05/2016

NOTES: (continued)

6. Publication IPC-7351 may have alternate designs.
7. Solder mask tolerances between and around signal pads can vary based on board fabrication site.

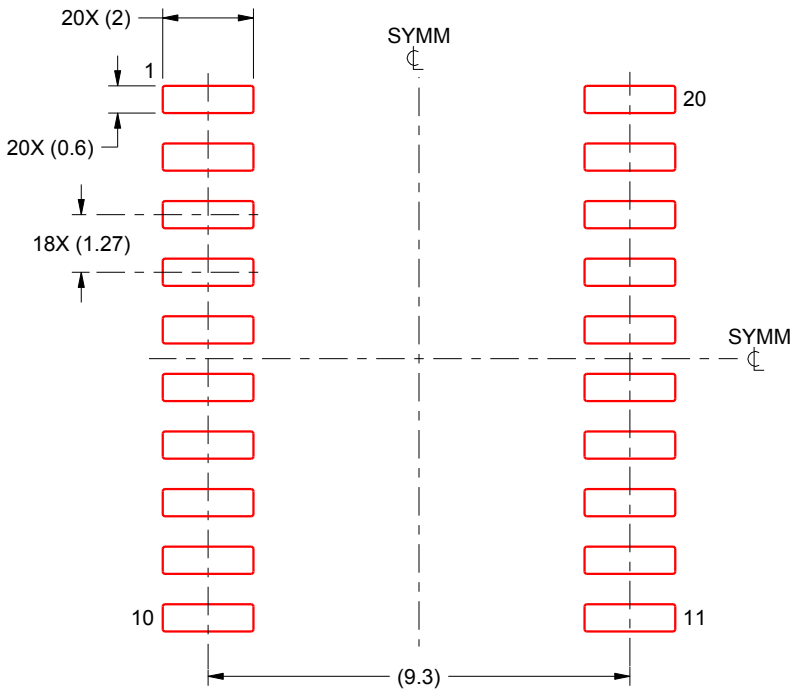

SOLDER PASTE EXAMPLE
BASED ON 0.125 mm THICK STENCIL
SCALE:6X

4220724/A 05/2016

NOTES: (continued)

8. Laser cutting apertures with trapezoidal walls and rounded corners may offer better paste release. IPC-7525 may have alternate design recommendations.
9. Board assembly site may have different recommendations for stencil design.

J (R–GDIP–T**)

14 LEADS SHOWN

CERAMIC DUAL IN–LINE PACKAGE

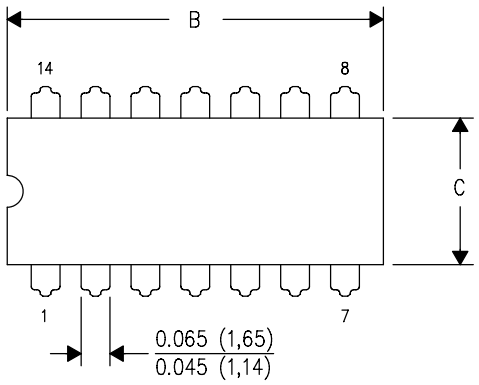

DIM \ PINS **	14	16	18	20
A	0.300 (7,62) BSC	0.300 (7,62) BSC	0.300 (7,62) BSC	0.300 (7,62) BSC
B MAX	0.785 (19,94)	.840 (21,34)	0.960 (24,38)	1.060 (26,92)
B MIN	—	—	—	—
C MAX	0.300 (7,62)	0.300 (7,62)	0.310 (7,87)	0.300 (7,62)
C MIN	0.245 (6,22)	0.245 (6,22)	0.220 (5,59)	0.245 (6,22)

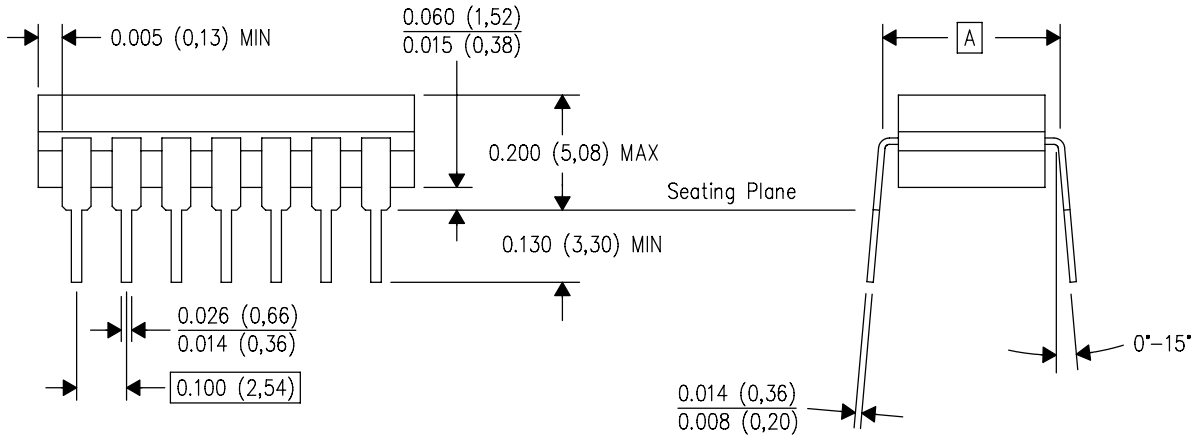

4040083/F 03/03

NOTES:
A. All linear dimensions are in inches (millimeters).
B. This drawing is subject to change without notice.
C. This package is hermetically sealed with a ceramic lid using glass frit.
D. Index point is provided on cap for terminal identification only on press ceramic glass frit seal only.
E. Falls within MIL STD 1835 GDIP1–T14, GDIP1–T16, GDIP1–T18 and GDIP1–T20.

IMPORTANT NOTICE AND DISCLAIMER

TI PROVIDES TECHNICAL AND RELIABILITY DATA (INCLUDING DATASHEETS), DESIGN RESOURCES (INCLUDING REFERENCE DESIGNS), APPLICATION OR OTHER DESIGN ADVICE, WEB TOOLS, SAFETY INFORMATION, AND OTHER RESOURCES “AS IS” AND WITH ALL FAULTS, AND DISCLAIMS ALL WARRANTIES, EXPRESS AND IMPLIED, INCLUDING WITHOUT LIMITATION ANY IMPLIED WARRANTIES OF MERCHANTABILITY, FITNESS FOR A PARTICULAR PURPOSE OR NON-INFRINGEMENT OF THIRD PARTY INTELLECTUAL PROPERTY RIGHTS.

These resources are intended for skilled developers designing with TI products. You are solely responsible for (1) selecting the appropriate TI products for your application, (2) designing, validating and testing your application, and (3) ensuring your application meets applicable standards, and any other safety, security, regulatory or other requirements.

These resources are subject to change without notice. TI grants you permission to use these resources only for development of an application that uses the TI products described in the resource. Other reproduction and display of these resources is prohibited. No license is granted to any other TI intellectual property right or to any third party intellectual property right. TI disclaims responsibility for, and you fully indemnify TI and its representatives against any claims, damages, costs, losses, and liabilities arising out of your use of these resources.

TI’s products are provided subject to TI’s Terms of Sale, TI’s General Quality Guidelines, or other applicable terms available either on ti.com or provided in conjunction with such TI products. TI’s provision of these resources does not expand or otherwise alter TI’s applicable warranties or warranty disclaimers for TI products. Unless TI explicitly designates a product as custom or customer-specified, TI products are standard, catalog, general purpose devices.

TI objects to and rejects any additional or different terms you may propose.

Copyright © 2026, Texas Instruments Incorporated

Last updated 10/2025