SN74AVC16T245 16-Bit Dual-Supply Bus Transceiver with Configurable Level-Shifting / Voltage Translation and Tri-State Outputs

1 Features

- Control Inputs V_{IH}/V_{IL} Levels Are Referenced to V_{CCA} Voltage
- V_{CC} Isolation Feature – If Either V_{CC} Input Is at GND, Both Ports Are in the High-Impedance State
- Overvoltage-Tolerant Inputs and Outputs Allow Mixed-Voltage-Mode Data Communications
- Fully Configurable Dual-Rail Design Allows Each Port to Operate Over the Full 1.2V to 3.6V Power-Supply Range
- I_{off} Supports Partial-Power-Down Mode Operation
- I/Os Are 4.6V Tolerant
- Maximum Data Rates
  - 380Mbps (1.8V to 3.3V Level-Shifting)
  - 200Mbps (<1.8V to 3.3V Level-Shifting)
  - 200Mbps (Level-Shifting to 2.5V or 1.8V)
  - 150Mbps (Level-Shifting to 1.5V)
  - 100Mbps (Level-Shifting to 1.2V)
- Latch-Up Performance Exceeds 100mA Per JESD 78, Class II
- ESD Protection Exceeds JESD 22
  - 8000V Human-Body Model (A114-A)
  - 200V Machine Model (A115-A)
  - 1000V Charged-Device Model (C101)

2 Applications

- Personal Electronics
- Industrial
- Enterprise
- Telecom

3 Description

This 16-bit noninverting bus transceiver uses two separate configurable power-supply rails. The SN74AVC16T245 device is optimized to operate with V_{CCA}/V_{CCB} set at 1.4V to 3.6V. The device is operational with V_{CCA}/V_{CCB} as low as 1.2V. The A port is designed to track V_{CCA}. V_{CCA} accepts any supply voltage from 1.2V to 3.6V. The B port is designed to track V_{CCB}. V_{CCB} accepts any supply voltage from 1.2V to 3.6V. This allows for universal low-voltage bidirectional translation between any of the 1.2V, 1.5V, 1.8V, 2.5V, and 3.3V voltage nodes.

The SN74AVC16T245 device is designed for asynchronous communication between data buses. The device transmits data from the A bus to the B bus or from the B bus to the A bus, depending on the logic level at the direction-control (DIR) input. The output-enable ($\overline{OE}$) input can be used to disable the outputs so the buses effectively are isolated.

The SN74AVC16T245 control pins (1DIR, 2DIR, 1 $\overline{OE}$, and 2 $\overline{OE}$) are supplied by V_{CCA}.

Device Information

PART NUMBER	PACKAGE(1)	BODY SIZE (NOM)
SN74AVC16T245	TSSOP (48)	12.50 mm × 6.10mm
	TVSOP (48)	9.70 mm × 4.40mm
	BGA MICROSTAR JUNIOR (56)	7.00 mm × 4.50mm

(1) For all available packages, see the orderable addendum at the end of the data sheet.

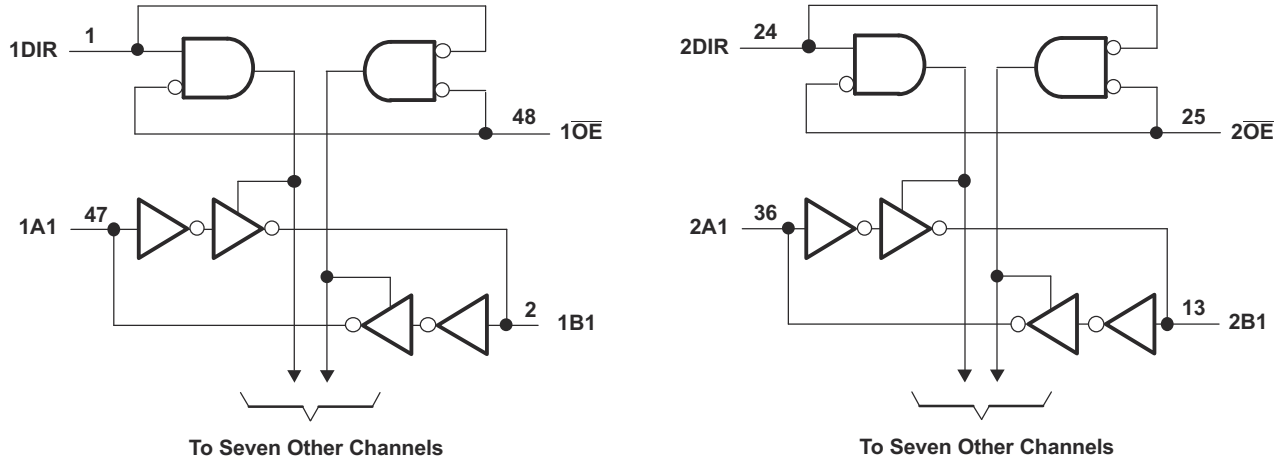

Logic Diagram (Positive Logic)

An IMPORTANT NOTICE at the end of this data sheet addresses availability, warranty, changes, use in safety-critical applications, intellectual property matters and other important disclaimers. PRODUCTION DATA.

Table of Contents

1 Features....1
2 Applications....1
3 Description....1
4 Description (continued)....3
5 Pin Configuration and Functions....4
6 Specifications....6
6.1 Absolute Maximum Ratings....6
6.2 ESD Ratings....6
6.3 Recommended Operating Conditions....7
6.4 Thermal Information....7
6.5 Electrical Characteristics....8
6.6 Switching Characteristics: V_{CCA} = 1.2 V....9
6.7 Switching Characteristics: V_{CCA} = 1.5 V ± 0.1 V....9
6.8 Switching Characteristics: V_{CCA} = 1.8 V ± 0.15 V....9
6.9 Switching Characteristics: V_{CCA} = 2.5 V ± 0.2 V....10
6.10 Switching Characteristics: V_{CCA} = 3.3 V ± 0.3 V....10
6.11 Operating Characteristics....10
6.12 Typical Characteristics....11
7 Parameter Measurement Information....13
8 Detailed Description....14
8.1 Overview....14
8.2 Functional Block Diagram....14
8.3 Feature Description....14
8.4 Device Functional Modes....15
9 Application and Implementation....16
9.1 Application Information....16
9.2 Typical Application....17
9.3 Power Supply Recommendations....18
9.4 Layout....18
10 Device and Documentation Support....20
10.1 Documentation Support....20
10.2 Support Resources....20
10.3 Trademarks....20
10.4 Electrostatic Discharge Caution....20
10.5 Glossary....20
11 Revision History....20
12 Mechanical, Packaging, and Orderable Information....21

Copyright © 2024 Texas Instruments Incorporated

4 Description (continued)

This device is fully specified for partial-power-down applications using I_{off}. The I_{off} circuitry disables the outputs, preventing damaging current backflow through the device when it is powered down.

The V_{CC} isolation feature ensures that if either V_{CC} input is at GND, both ports are in the high-impedance state.

To ensure the high-impedance state during power up or power down, $\overline{OE}$ should be tied to V_{CCA} through a pullup resistor; the minimum value of the resistor is determined by the current-sinking capability of the driver.

Copyright © 2024 Texas Instruments Incorporated

5 Pin Configuration and Functions

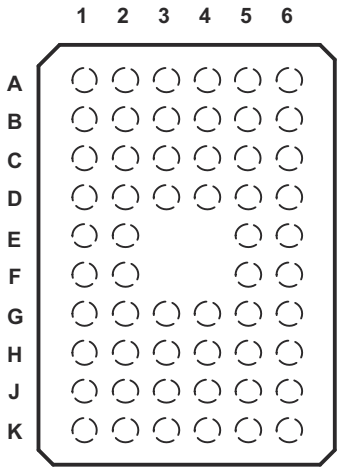

Figure 5-1. GQL or ZQL Package 56-Pin BGA MICROSTAR JUNIOR Top View

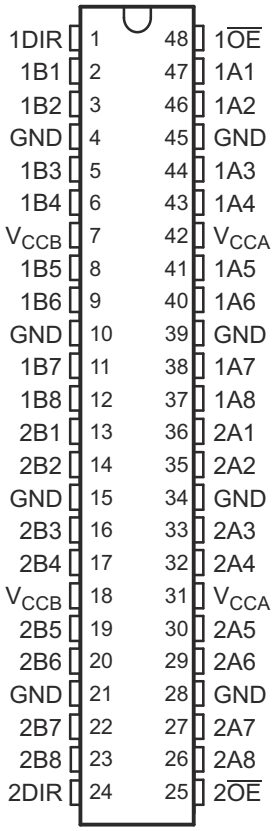

Figure 5-2. DGG or DGV Package 48-Pin TSSOP or TVSOP Top View

Copyright © 2024 Texas Instruments Incorporated

Pin Functions

PIN			I/O	DESCRIPTION
NAME	TSSOP, TVSOP	BGA MICROSTAR		
1DIR, 2DIR	1, 24	A1, K1	I	Direction-control signal
1B1 to 1B8	2, 3, 5, 6, 8, 9, 11, 12	B2, B1, C2, C1, D2, D1, E2, E1	I/O	Input/Output. Referenced to V_{CCB}
2B1 to 2B8	13, 14, 16, 17, 19, 20, 22, 23	F1, F2, G1, G2, H1, H2, J1, J2	I/O	Input/Output. Referenced to V_{CCB}
GND	4, 10, 15, 21, 45, 39, 34, 28	B3, D3, G3, J3, J4, G4, D4, B4	—	Ground
V_{CCB}	7, 18	C3, H3	—	B-port supply voltage. 1.2 V ≤ V_{CCB} ≤ 3.6 V
1 $\overline{OE}$, 2 $\overline{OE}$	48, 25	A6, K6	—	Tri-State output-mode enables. Pull $\overline{OE}$ high to place all outputs in Tri-State mode. Referenced to V_{CCA}
1A1 to 1A8	47, 46, 44, 43, 41, 40, 38, 37	B5, B6, C5, C6, D5, D6, E5, E6	I/O	Input/Output. Referenced to V_{CCA}
2A1 to 2A8	36, 35, 33, 32, 30, 29, 27, 26	F6, F5, G6, G5, H6, H5, J6, J5	I/O	Input/Output. Referenced to V_{CCA}
V_{CCA}	42, 31	C4, H4	—	A-port supply voltage. 1.2 V ≤ V_{CCB} ≤ 3.6 V
N.C.	—	A2, A3, A4, A5, K2, K3, K4, K5	—	No internal connection

Copyright © 2024 Texas Instruments Incorporated

6 Specifications

6.1 Absolute Maximum Ratings

over operating free-air temperature range (unless otherwise noted)[1]

			MIN	MAX	UNIT
V_{CCA} V_{CCB}	Supply voltage		–0.5	4.6	V
V_I	Input voltage[2]	I/O ports (A port)	–0.5	4.6	V
		I/O ports (B port)	–0.5	4.6	
		Control inputs	–0.5	4.6	
V_O	Voltage range applied to any output in the high-impedance or power-off state[2]	A port	–0.5	4.6	V
		B port	–0.5	4.6	
V_O	Voltage range applied to any output in the high or low state[2] [3]	A port	–0.5	V_{CCA} + 0.5	V
		B port	–0.5	V_{CCB} + 0.5	
I_{IK}	Input clamp current	V_I < 0		–50	mA
I_{OK}	Output clamp current	V_O < 0		–50	mA
I_O	Continuous output current			±50	mA
	Continuous current through each V_{CCA}, V_{CCB}, and GND			±100	mA
$R_{\theta JA}$	Package thermal impedance[4]	DGG package		70	°C/W
		DGV package		58	
		GQL/ZQL package		42	
T_J	Junction temperature		–40	150	°C
T_{stg}	Storage temperature		–65	150	°C

(1) Stresses beyond those listed under *Absolute Maximum Ratings* may cause permanent damage to the device. These are stress ratings only, which do not imply functional operation of the device at these or any other conditions beyond those indicated under *Recommended Operating Conditions*. Exposure to absolute-maximum-rated conditions for extended periods may affect device reliability.
(2) The input voltage (V_I) and output negative-voltage (V_O) ratings may be exceeded if the input and output current ratings are observed.
(3) The output positive-voltage rating may be exceeded up to 4.6 V maximum if the output current rating is observed.
(4) The package thermal impedance is calculated in accordance with JESD 51-7.

6.2 ESD Ratings

		VALUE	UNIT
$V_{(ESD)}$ Electrostatic discharge	Human-body model (HBM), per ANSI/ESDA/JEDEC JS-001[1]	±8000	V
	Charged-device model (CDM), per JEDEC specification JESD22-C101[2]	±1000	
	Machine model (A115-A)	±200	

(1) JEDEC document JEP155 states that 500-V HBM allows safe manufacturing with a standard ESD control process. Manufacturing with less than 500-V HBM is possible with the necessary precautions.
(2) JEDEC document JEP157 states that 250-V CDM allows safe manufacturing with a standard ESD control process. Manufacturing with less than 250-V CDM is possible with the necessary precautions.

Copyright © 2024 Texas Instruments Incorporated

6.3 Recommended Operating Conditions

over operating free-air temperature range (unless otherwise noted)[1] [2] [3]

			V_{CCI}	V_{CCO}	MIN	MAX	UNIT
V_{CCA}	Supply voltage				1.2	3.6	V
V_{CCB}	Supply voltage				1.2	3.6	V
V_{IH}	High-level input voltage	Data inputs[4]	1.2 V to 1.95 V		V_{CCI} × 0.65		V
			1.95 V to 2.7 V		1.6		
			2.7 V to 3.6 V		2		
V_{IL}	Low-level input voltage	Data inputs[4]	1.2 V to 1.95 V			V_{CCI} × 0.35	V
			1.95 V to 2.7 V			0.7	
			2.7 V to 3.6 V			0.8	
V_{IH}	High-level input voltage	DIR (referenced to V_{CCA})[5]	1.2 V to 1.95 V		V_{CCA} × 0.65		V
			1.95 V to 2.7 V		1.6		
			2.7 V to 3.6 V		2		
V_{IL}	Low-level input voltage	DIR (referenced to V_{CCA})[5]	1.2 V to 1.95 V			V_{CCA} × 0.35	V
			1.95 V to 2.7 V			0.7	
			2.7 V to 3.6 V			0.8	
V_I	Input voltage				0	3.6	V
V_O	Output voltage	Active state			0	V_{CCO}	V
		Tri-State			0	3.6	
I_{OH}	High-level output current			1.2 V		–3	mA
				1.4 V to 1.6 V		–6	
				1.65 V to 1.95 V		–8	
				2.3 V to 2.7 V		–9	
				3 V to 3.6 V		–12	
I_{OL}	Low-level output current			1.2 V		3	mA
				1.4 V to 1.6 V		6	
				1.65 V to 1.95 V		8	
				2.3 V to 2.7 V		9	
				3 V to 3.6 V		12	
Δt/Δv	Input transition rise or fall rate					5	ns/V
T_A	Operating free-air temperature				–40	85	°C

(1) V_{CCI} is the V_{CC} associated with the data input port.
(2) V_{CCO} is the V_{CC} associated with the output port.
(3) All unused data inputs of the device must be held at V_{CCI} or GND to ensure proper device operation. Refer to the TI application report, *Implications of Slow or Floating CMOS Inputs*, SCBA004.
(4) For V_{CCI} values not specified in the data sheet, V_{IH} min = V_{CCI} × 0.7 V, V_{IL} max = V_{CCI} × 0.3 V.
(5) For V_{CCA} values not specified in the data sheet, V_{IH} min = V_{CCA} × 0.7 V, V_{IL} max = V_{CCA} × 0.3 V.

6.4 Thermal Information

THERMAL METRIC[1]		SN74AVC16T245			UNIT
		DGV (TVSOP)	DGG (TSSOP)	ZQL (BGA MICROSTAR JUNIOR)	
		48 PINS	48 PINS	56 PINS	
$R_{\theta JA}$	Junction-to-ambient thermal resistance	82.5	69.9	64.6	°C/W
$R_{\theta JC(top)}$	Junction-to-case (top) thermal resistance	34.2	23.9	16.6	°C/W
$R_{\theta JB}$	Junction-to-board thermal resistance	45.1	36.6	30.8	°C/W
ψ_{JT}	Junction-to-top characterization parameter	2.7	1.7	0.9	°C/W

Copyright © 2024 Texas Instruments Incorporated

6.4 Thermal Information (continued)

THERMAL METRIC[1]		SN74AVC16T245			UNIT
		DGV (TVSOP)	DGG (TSSOP)	ZQL (BGA MICROSTAR JUNIOR)	
		48 PINS	48 PINS	56 PINS	
ψ_{JB}	Junction-to-board characterization parameter	44.6	36.2	64.6	°C/W

(1) For more information about traditional and new thermal metrics, see the *Semiconductor and IC Package Thermal Metrics* application report, SPRA953.

6.5 Electrical Characteristics

over recommended operating free-air temperature range (unless otherwise noted)[1] [2]

PARAMETER		TEST CONDITIONS		V_{CCA}	V_{CCB}	T_A = 25°C			T_A = –40°C to 85°C			UNIT
						MIN	TYP	MAX	MIN	TYP	MAX	
V_{OH}		I_{OH} = –100 µA	$V_I = V_{IH}$	1.2 V to 3.6 V	1.2 V to 3.6 V				V_{CCO} – 0.2			V
		I_{OH} = –3 mA		1.2 V	1.2 V		0.95					
		I_{OH} = –6 mA		1.4 V	1.4 V				1.05			
		I_{OH} = –8 mA		1.65 V	1.65 V				1.2			
		I_{OH} = –9 mA		2.3 V	2.3 V				1.75			
		I_{OH} = –12 mA		3 V	3 V				2.3			
V_{OL}		I_{OL} = 100 µA	$V_I = V_{IL}$	1.2 V to 3.6 V	1.2 V to 3.6 V						0.2	V
		I_{OL} = 3 mA		1.2 V	1.2 V		0.15					
		I_{OL} = 6 mA		1.4 V	1.4 V						0.35	
		I_{OL} = 8 mA		1.65 V	1.65 V						0.45	
		I_{OL} = 9 mA		2.3 V	2.3 V						0.55	
		I_{OL} = 12 mA		3 V	3 V						0.7	
I_I	Control inputs	$V_I = V_{CCA}$ or GND		1.2 V to 3.6 V	1.2 V to 3.6 V		±0.025	±0.25			±1	µA
I_{off}	A or B port	V_I or V_O = 0 to 3.6 V		0 V	0 to 3.6 V		±0.1	±2.5			±5	µA
	A or B port			0 to 3.6 V	0 V		±0.5	±2.5			±5	
I_{OZ} [3]	A or B port	$V_O = V_{CCO}$ or GND, $V_I = V_{CCI}$ or GND, $\overline{OE} = V_{IH}$		3.6 V	3.6 V		±0.5	±2.5			±5	µA
I_{CCA}		$V_I = V_{CCI}$ or GND, I_O = 0		1.2 V to 3.6 V	1.2 V to 3.6 V						25	µA
				0 V	3.6 V						–5	
				3.6 V	0 V						25	
I_{CCB}		$V_I = V_{CCI}$ or GND, I_O = 0		1.2 V to 3.6 V	1.2 V to 3.6 V						25	µA
				0 V	3.6 V						25	
				3.6 V	0 V						–5	
$I_{CCA} + I_{CCB}$		$V_I = V_{CCI}$ or GND, I_O = 0		1.2 V to 3.6 V	1.2 V to 3.6 V						45	µA
C_i	Control inputs	V_I = 3.3 V or GND		3.3 V	3.3 V		3.5					pF
C_{io}	A or B port	V_O = 3.3 V or GND		3.3 V	3.3 V		7					pF

(1) V_{CCO} is the V_{CC} associated with the output port.
(2) V_{CCI} is the V_{CC} associated with the input port.
(3) For I/O ports, the parameter I_{OZ} includes the input leakage current.

Copyright © 2024 Texas Instruments Incorporated

6.6 Switching Characteristics: V_{CCA} = 1.2 V

over recommended operating free-air temperature range, V_{CCA} = 1.2 V (see Figure 7-1)

PARAMETER	FROM (INPUT)	TO (OUTPUT)	V_{CCB} = 1.2 V			V_{CCB} = 1.5 V			V_{CCB} = 1.8 V			V_{CCB} = 2.5 V			V_{CCB} = 3.3 V			UNIT
			MIN	TYP	MAX	MIN	TYP	MAX	MIN	TYP	MAX	MIN	TYP	MAX	MIN	TYP	MAX	
t_{PLH}	A	B		4.1			3.3			3			2.8			3.2		ns
t_{PHL}				4.1			3.3			3			2.8			3.2		
t_{PLH}	B	A		4.4			4			3.8			3.6			3.5		ns
t_{PHL}				4.4			4			3.8			3.6			3.5		
t_{PZH}	$\overline{OE}$	A		6.4			6.4			6.4			6.4			6.4		ns
t_{PZL}				6.4			6.4			6.4			6.4			6.4		
t_{PZH}	$\overline{OE}$	B		6			4.6			4			3.4			3.2		ns
t_{PZL}				6			4.6			4			3.4			3.2		
t_{PHZ}	$\overline{OE}$	A		6.6			6.6			6.6			6.6			6.8		ns
t_{PLZ}				6.6			6.6			6.6			6.6			6.8		
t_{PHZ}	$\overline{OE}$	B		6			4.9			4.9			4.2			5.3		ns
t_{PLZ}				6			4.9			4.9			4.2			5.3		

6.7 Switching Characteristics: V_{CCA} = 1.5 V ± 0.1 V

over recommended operating free-air temperature range, V_{CCA} = 1.5 V ± 0.1 V (see Figure 7-1)

PARAMETER	FROM (INPUT)	TO (OUTPUT)	V_{CCB} = 1.2 V			V_{CCB} = 1.5 V ± 0.1 V			V_{CCB} = 1.8 V ± 0.15 V			V_{CCB} = 2.5 V ± 0.2 V			V_{CCB} = 3.3 V ± 0.3 V			UNIT
			MIN	TYP	MAX	MIN	TYP	MAX	MIN	TYP	MAX	MIN	TYP	MAX	MIN	TYP	MAX	
t_{PLH}	A	B		3.6		0.5		6.2	0.5		5.2	0.5		4.1	0.5		3.7	ns
t_{PHL}				3.6		0.5		6.2	0.5		5.2	0.5		4.1	0.5		3.7	
t_{PLH}	B	A		3.3		0.5		6.2	0.5		5.9	0.5		5.6	0.5		5.5	ns
t_{PHL}				3.3		0.5		6.2	0.5		5.9	0.5		5.6	0.5		5.5	
t_{PZH}	$\overline{OE}$	A		4.3		1		10.1	1		10.1	1		10.1	1		10.1	ns
t_{PZL}				4.3		1		10.1	1		10.1	1		10.1	1		10.1	
t_{PZH}	$\overline{OE}$	B		5.6		1		10.1	0.5		8.1	0.5		5.9	0.5		5.2	ns
t_{PZL}				5.6		1		10.1	0.5		8.1	0.5		5.9	0.5		5.2	
t_{PHZ}	$\overline{OE}$	A		4.5		1.5		9.1	1.5		9.1	1.5		9.1	1.5		9.1	ns
t_{PLZ}				4.5		1.5		9.1	1.5		9.1	1.5		9.1	1.5		9.1	
t_{PHZ}	$\overline{OE}$	B		5.5		1.5		8.7	1.5		7.5	1		6.5	1		6.3	ns
t_{PLZ}				5.5		1.5		8.7	1.5		7.5	1		6.5	1		6.3	

6.8 Switching Characteristics: V_{CCA} = 1.8 V ± 0.15 V

over recommended operating free-air temperature range, V_{CCA} = 1.8 V ± 0.15 V (see Figure 7-1)

PARAMETER	FROM (INPUT)	TO (OUTPUT)	V_{CCB} = 1.2 V			V_{CCB} = 1.5 V ± 0.1 V			V_{CCB} = 1.8 V ± 0.15 V			V_{CCB} = 2.5 V ± 0.2 V			V_{CCB} = 3.3 V ± 0.3 V			UNIT
			MIN	TYP	MAX	MIN	TYP	MAX	MIN	TYP	MAX	MIN	TYP	MAX	MIN	TYP	MAX	
t_{PLH}	A	B		3.4		0.5		5.9	0.5		4.8	0.5		3.7	0.5		3.3	ns
t_{PHL}				3.4		0.5		5.9	0.5		4.8	0.5		3.7	0.5		3.3	
t_{PLH}	B	A		3		0.5		5.2	0.5		4.8	0.5		4.5	0.5		4.4	ns
t_{PHL}				3		0.5		5.2	0.5		4.8	0.5		4.5	0.5		4.4	
t_{PZH}	$\overline{OE}$	A		3.4		1		7.8	1		7.8	1		7.8	1		7.8	ns
t_{PZL}				3.4		1		7.8	1		7.8	1		7.8	1		7.8	
t_{PZH}	$\overline{OE}$	B		5.4		1		9.2	0.5		7.4	0.5		5.3	0.5		4.5	ns
t_{PZL}				5.4		1		9.2	0.5		7.4	0.5		5.3	0.5		4.5	
t_{PHZ}	$\overline{OE}$	A		4.2		1.5		7.7	1.5		7.7	1.5		7.7	1.5		7.7	ns
t_{PLZ}				4.2		1.5		7.7	1.5		7.7	1.5		7.7	1.5		7.7	
t_{PHZ}	$\overline{OE}$	B		5.2		1.5		8.4	1.5		7.1	1		5.9	1		5.7	ns
t_{PLZ}				5.2		1.5		8.4	1.5		7.1	1		5.9	1		5.7	

Copyright © 2024 Texas Instruments Incorporated

6.9 Switching Characteristics: V_{CCA} = 2.5 V ± 0.2 V

over recommended operating free-air temperature range, V_{CCA} = 2.5 V ± 0.2 V (see Figure 7-1)

PARAMETER	FROM (INPUT)	TO (OUTPUT)	V_{CCB} = 1.2 V			V_{CCB} = 1.5 V ± 0.1 V			V_{CCB} = 1.8 V ± 0.15 V			V_{CCB} = 2.5 V ± 0.2 V			V_{CCB} = 3.3 V ± 0.3 V			UNIT
			MIN	TYP	MAX	MIN	TYP	MAX	MIN	TYP	MAX	MIN	TYP	MAX	MIN	TYP	MAX	
t_{PLH}	A	B		3.2		0.5		5.6	0.5		4.5	0.5		3.3	0.5		2.8	ns
t_{PHL}				3.2		0.5		5.6	0.5		4.5	0.5		3.3	0.5		2.8	
t_{PLH}	B	A		2.6		0.5		4.1	0.5		3.7	0.5		3.3	0.5		3.2	ns
t_{PHL}				2.6		0.5		4.1	0.5		3.7	0.5		3.3	0.5		3.2	
t_{PZH}	$\overline{OE}$	A		2.5		0.5		5.3	0.5		5.3	0.5		5.3	0.5		5.3	ns
t_{PZL}				2.5		0.5		5.3	0.5		5.3	0.5		5.3	0.5		5.3	
t_{PZH}	$\overline{OE}$	B		5.2		0.5		9.4	0.5		7.3	0.5		5.1	0.5		4.5	ns
t_{PZL}				5.2		0.5		9.4	0.5		7.3	0.5		5.1	0.5		4.5	
t_{PHZ}	$\overline{OE}$	A		3		1		6.1	1		6.1	1		6.1	1		6.1	ns
t_{PLZ}				3		1		6.1	1		6.1	1		6.1	1		6.1	
t_{PHZ}	$\overline{OE}$	B		5		1		7.9	1		6.6	1		6.1	1		5.2	ns
t_{PLZ}				5		1		7.9	1		6.6	1		6.1	1		5.2	

6.10 Switching Characteristics: V_{CCA} = 3.3 V ± 0.3 V

over recommended operating free-air temperature range, V_{CCA} = 3.3 V ± 0.3 V (see Figure 7-1)

PARAMETER	FROM (INPUT)	TO (OUTPUT)	V_{CCB} = 1.2 V			V_{CCB} = 1.5 V ± 0.1 V			V_{CCB} = 1.8 V ± 0.15 V			V_{CCB} = 2.5 V ± 0.2 V			V_{CCB} = 3.3 V ± 0.3 V			UNIT
			MIN	TYP	MAX	MIN	TYP	MAX	MIN	TYP	MAX	MIN	TYP	MAX	MIN	TYP	MAX	
t_{PLH}	A	B		3.2		0.5		5.5	0.5		4.4	0.5		3.2	0.5		2.7	ns
t_{PHL}				3.2		0.5		5.5	0.5		4.4	0.5		3.2	0.5		2.7	
t_{PLH}	B	A		2.8		0.5		3.7	0.5		3.3	0.5		2.8	0.5		2.7	ns
t_{PHL}				2.8		0.5		3.7	0.5		3.3	0.5		2.8	0.5		2.7	
t_{PZH}	$\overline{OE}$	A		2.2		0.5		4.3	0.5		4.2	0.5		4.1	0.5		4	ns
t_{PZL}				2.2		0.5		4.3	0.5		4.2	0.5		4.1	0.5		4	
t_{PZH}	$\overline{OE}$	B		5.1		0.5		9.3	0.5		7.2	0.5		4.9	0.5		4	ns
t_{PZL}				5.1		0.5		9.3	0.5		7.2	0.5		4.9	0.5		4	
t_{PHZ}	$\overline{OE}$	A		3.4		0.5		5	0.5		5	0.5		5	0.5		5	ns
t_{PLZ}				3.4		0.5		5	0.5		5	0.5		5	0.5		5	
t_{PHZ}	$\overline{OE}$	B		4.9		1		7.7	1		6.5	1		5.2	0.5		5	ns
t_{PLZ}				4.9		1		7.7	1		6.5	1		5.2	0.5		5	

6.11 Operating Characteristics

T_A = 25°C

PARAMETER			TEST CONDITIONS	V_{CCA} = V_{CCB} = 1.2 V			V_{CCA} = V_{CCB} = 1.5 V			V_{CCA} = V_{CCB} = 1.8 V			V_{CCA} = V_{CCB} = 2.5 V			V_{CCA} = V_{CCB} = 3.3 V			UNIT
				MIN	TYP	MAX	MIN	TYP	MAX	MIN	TYP	MAX	MIN	TYP	MAX	MIN	TYP	MAX	
C_{pdA} (1)	A to B	Outputs enabled	C_L = 0, f = 10 MHz, t_r = t_f = 1 ns		1			1			1			1			2		pF
		Outputs disabled			1			1			1			1			1		
	B to A	Outputs enabled			13			13			14			15			16		
		Outputs disabled			1			1			1			1			1		
C_{pdB} (1)	A to B	Outputs enabled	C_L = 0, f = 10 MHz, t_r = t_f = 1 ns		13			13			14			15			16		pF
		Outputs disabled			1			1			1			1			1		
	B to A	Outputs enabled			1			1			1			1			2		
		Outputs disabled			1			1			1			1			1		

(1) Power dissipation capacitance per transceiver. Refer to the TI application report, *CMOS Power Consumption and Cpd Calculation*, SCAA035

Copyright © 2024 Texas Instruments Incorporated

6.12 Typical Characteristics

T_A = 25°C

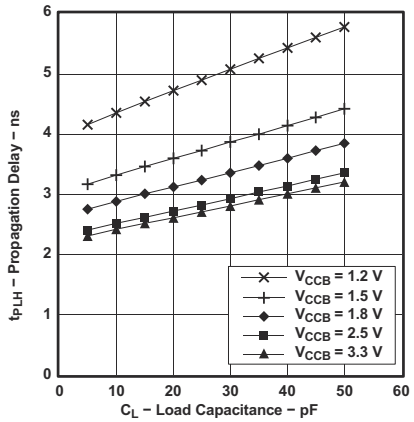

V_{CCA} = 1.2 V

Figure 6-1. Typical Propagation Delay t_{PLH} (A to B) vs Load Capacitance

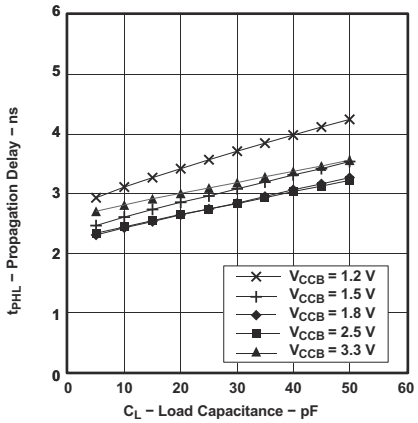

V_{CCA} = 1.2 V

Figure 6-2. Typical Propagation Delay t_{PHL} (A to B) vs Load Capacitance

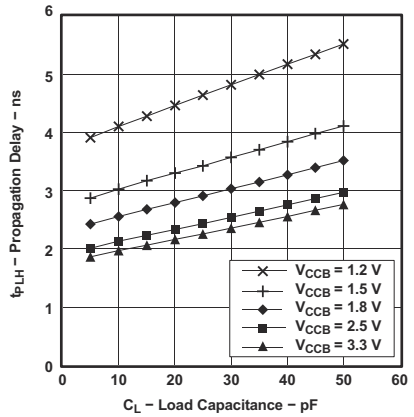

V_{CCA} = 1.5 V

Figure 6-3. Typical Propagation Delay t_{PLH} (A to B) vs Load Capacitance

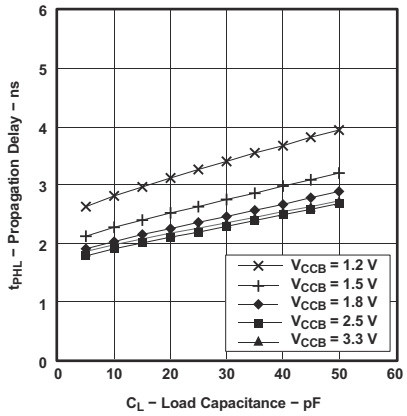

V_{CCA} = 1.5 V

Figure 6-4. Typical Propagation Delay t_{PHL} (A to B) vs Load Capacitance

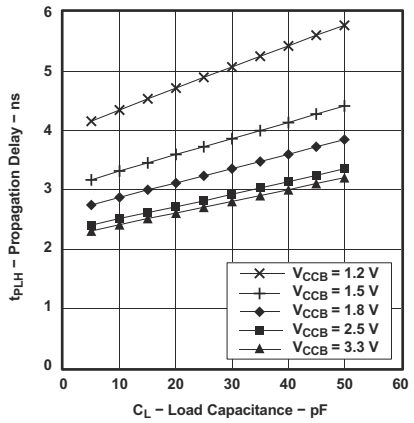

V_{CCA} = 1.8 V

Figure 6-5. Typical Propagation Delay t_{PLH} (A to B) vs Load Capacitance

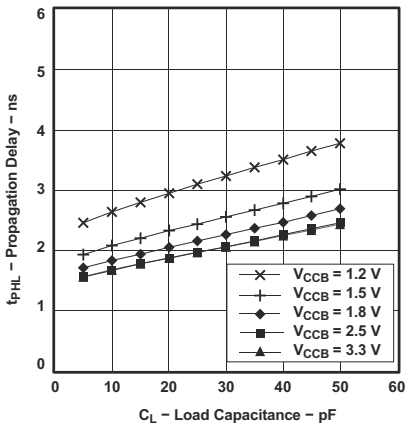

V_{CCA} = 1.8 V

Figure 6-6. Typical Propagation Delay t_{PHL} (A to B) vs Load Capacitance

6.12 Typical Characteristics (continued)

T_A = 25°C

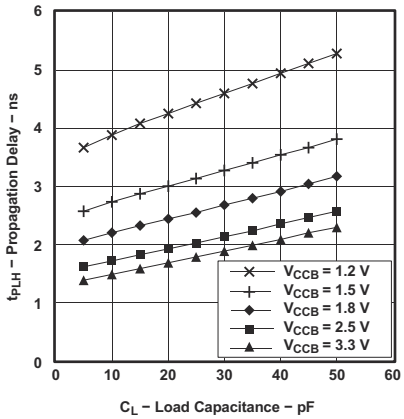

V_{CCA} = 2.5 V

Figure 6-7. Typical Propagation Delay t_{PLH} (A to B) vs Load Capacitance

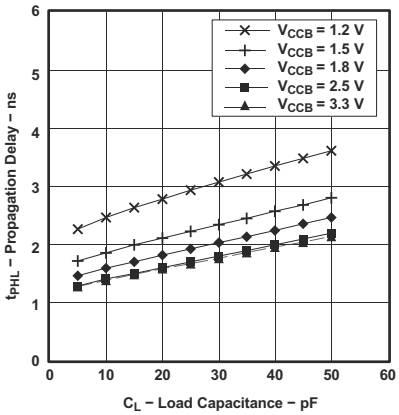

V_{CCA} = 2.5 V

Figure 6-8. Typical Propagation Delay t_{PHL} (A to B) vs Load Capacitance

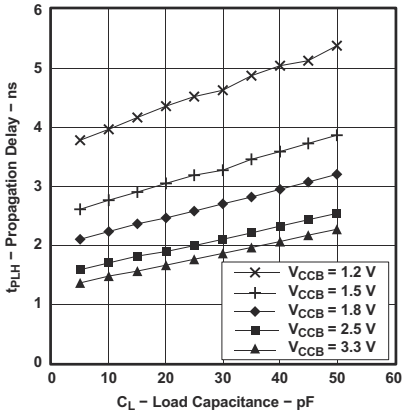

V_{CCA} = 3.3 V

Figure 6-9. Typical Propagation Delay t_{PLH} (A to B) vs Load Capacitance

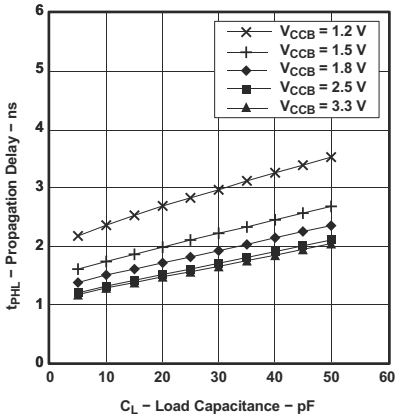

V_{CCA} = 3.3 V

Figure 6-10. Typical Propagation Delay t_{PHL} (A to B) vs Load Capacitance

Copyright © 2024 Texas Instruments Incorporated

7 Parameter Measurement Information

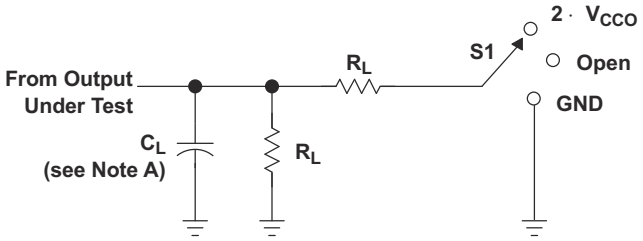

LOAD CIRCUIT

TEST	S1
t_{pd}	Open
t_{PLZ}/t_{PZL}	2 · V_{CCO}
t_{PHZ}/t_{PZH}	GND

V_{CCO}	C_L	R_L	V_{TP}
1.2 V	15 pF	2 kΩ	0.1 V
1.5 V ± 0.1 V	15 pF	2 kΩ	0.1 V
1.8 V ± 0.15 V	15 pF	2 kΩ	0.15 V
2.5 V ± 0.2 V	15 pF	2 kΩ	0.15 V
3.3 V ± 0.3 V	15 pF	2 kΩ	0.3 V

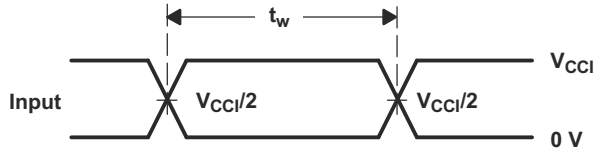

VOLTAGE WAVEFORMS
PULSE DURATION

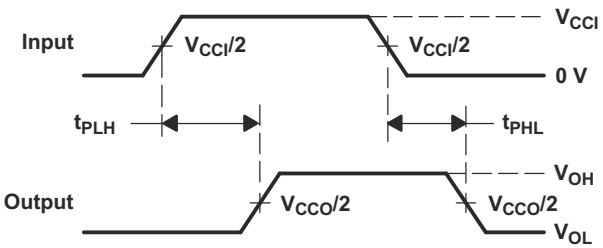

VOLTAGE WAVEFORMS
PROPAGATION DELAY TIMES

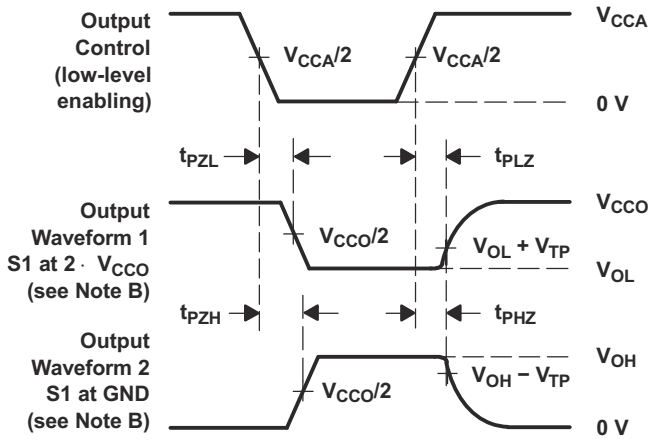

VOLTAGE WAVEFORMS
ENABLE AND DISABLE TIMES

NOTES:
A. C_L includes probe and jig capacitance.
B. Waveform 1 is for an output with internal conditions such that the output is low, except when disabled by the output control. Waveform 2 is for an output with internal conditions such that the output is high, except when disabled by the output control.
C. All input pulses are supplied by generators having the following characteristics: PRR 10 MHz, Z_O = 50 Ω, dv/dt ≥ 1 V/ns.
D. The outputs are measured one at a time, with one transition per measurement.
E. t_{PLH} and t_{PHL} are the same as t_{pd}.
F. V_{CCI} is the V_{CC} associated with the input port.
G. V_{CCO} is the V_{CC} associated with the output port.

Figure 7-1. Load Circuit and Voltage Waveforms

8 Detailed Description

8.1 Overview

The SN74AVC16T245 is a 16-bit, dual-supply noninverting bidirectional voltage level translation. Pins A and control pins (DIR and $\overline{OE}$) are supported by V_{CCA} and pins B are supported by V_{CCB}. The A port can accept I/O voltages ranging from 1.2 V to 3.6 V, while the B port can accept I/O voltages from 1.2 V to 3.6 V. A high on DIR allows data transmission from A to B and a low on DIR allows data transmission from B to A when $\overline{OE}$ is set to low. When $\overline{OE}$ is set to high, both A and B are in the high-impedance state.

This device is fully specified for partial-power-down applications using off output current (I_{off}).

The V_{CC} isolation feature ensures that if either V_{CC} input is at GND, both ports are put in a high-impedance state.

8.2 Functional Block Diagram

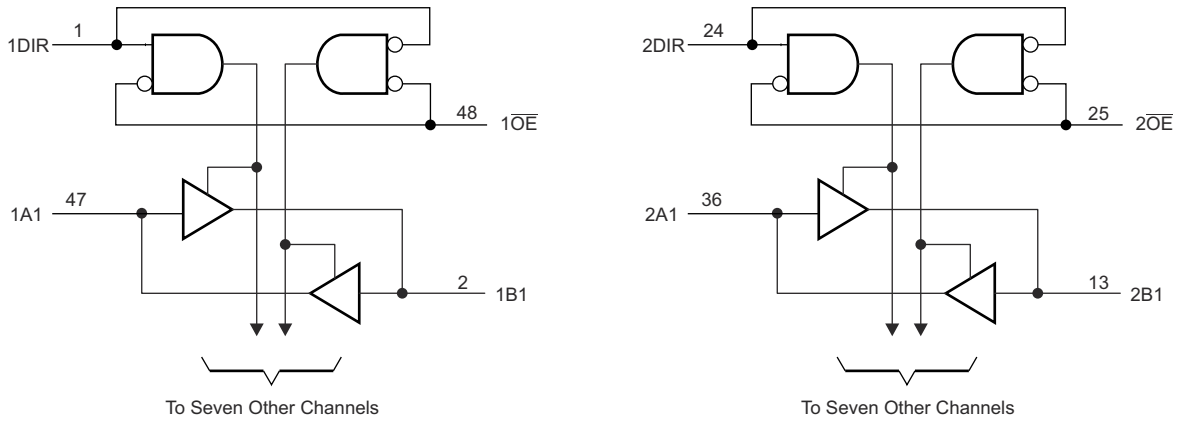

8.3 Feature Description

8.3.1 Fully Configurable Dual-Rail Design Allows Each Port to Operate Over the Full 1.2-V to 3.6-V Power-Supply Range

Both V_{CCA} and V_{CCB} can be supplied at any voltage from 1.2 V to 3.6 V making the device suitable for translating between any of the low voltage nodes (1.2 V, 1.8 V, 2.5 V, and 3.3 V).

8.3.2 Partial-Power-Down Mode Operation

This device is fully specified for partial-power-down applications using off output current (I_{off}). The I_{off} circuitry will prevent backflow current by disabling I/O output circuits when device is in partial power-down mode.

8.3.3 V_{CC} Isolation

The V_{CC} isolation feature ensures that if either V_{CCA} or V_{CCB} are at GND, both ports will be in a high-impedance state (I_{OZ} shown in *Section 6.5*). This prevents false logic levels from being presented to either bus.

Copyright © 2024 Texas Instruments Incorporated

8.4 Device Functional Modes

The SN74AVC16T245 is a voltage level translator that can operate from 1.2 V to 3.6 V (V_{CCA}) and 1.2 V to 3.6 V (V_{CCB}). The signal translation between 1.2 V and 3.6 V requires direction control and output enable control. When $\overline{OE}$ is low and DIR is high, data transmission is from A to B. When $\overline{OE}$ is low and DIR is low, data transmission is from B to A. When $\overline{OE}$ is high, both output ports will be high-impedance.

Table 8-1. Functions Table

CONTROL INPUTS[1]		OUTPUT CIRCUITS		OPERATION
$\overline{OE}$	DIR	A PORT	B PORT	
L	L	Enabled	Hi-Z	B data to A bus
L	H	Hi-Z	Enabled	A data to B bus
H	X	Hi-Z	Hi-Z	Isolation

(1) Input circuits of the data I/Os always are active.

9 Application and Implementation

Note

Information in the following applications sections is not part of the TI component specification, and TI does not warrant its accuracy or completeness. TI's customers are responsible for determining suitability of components for their purposes, as well as validating and testing their design implementation to confirm system functionality.

9.1 Application Information

The SN74AVC16T245 device can be used in level-shifting applications for interfacing devices and addressing mixed voltage incompatibility. The SN74AVC16T245 device is ideal for data transmission where direction is different for each channel.

9.1.1 Enable Times

Calculate the enable times for the SN74AVC16T45 using the following formulas:

$$t_{PZH}\text{ (DIR to A)} = t_{PLZ}\text{ (DIR to B)} + t_{PLH}\text{ (B to A)} \quad (1)$$

$$t_{PZL}\text{ (DIR to A)} = t_{PHZ}\text{ (DIR to B)} + t_{PHL}\text{ (B to A)} \quad (2)$$

$$t_{PZH}\text{ (DIR to B)} = t_{PLZ}\text{ (DIR to A)} + t_{PLH}\text{ (A to B)} \quad (3)$$

$$t_{PZL}\text{ (DIR to B)} = t_{PHZ}\text{ (DIR to A)} + t_{PHL}\text{ (A to B)} \quad (4)$$

In a bidirectional application, these enable times provide the maximum delay from the time the DIR bit is switched until an output is expected. For example, if the SN74AVC16T245 initially is transmitting from A to B, then the DIR bit is switched; the B port of the device must be disabled before presenting it with an input. After the B port has been disabled, an input signal applied to it appears on the corresponding A port after the specified propagation delay.

Copyright © 2024 Texas Instruments Incorporated

9.2 Typical Application

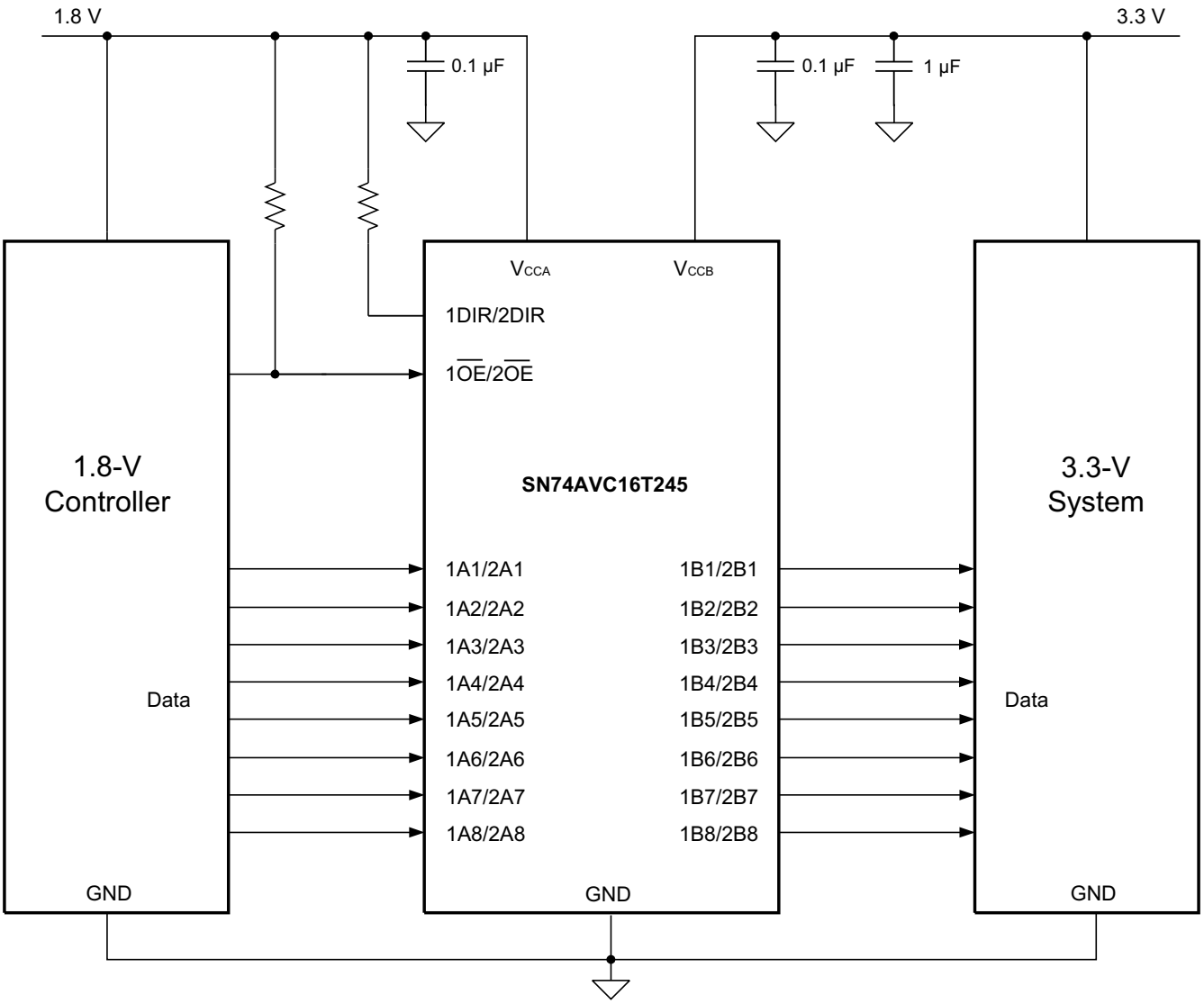

Figure 9-1. Typical Application Schematic

9.2.1 Design Requirements

This device uses drivers which are enabled depending on the state of the DIR pin. The designer must know the intended flow of data and take care not to violate any of the high or low logic levels. Unused data inputs must not be floating, as this can cause excessive internal leakage on the input CMOS structure. Tie any unused input and output ports directly to ground.

For this design example, use the parameters listed in Table 9-1.

Table 9-1. Design Parameters

DESIGN PARAMETER	EXAMPLE VALUE
Input voltage range	1.2 V to 3.6 V
Output voltage range	1.2 V to 3.6 V

9.2.2 Detailed Design Procedure

To begin the design process, determine the following:

9.2.2.1 Input Voltage Ranges

Use the supply voltage of the device that is driving the SN74AVC16T245 device to determine the input voltage range. For a valid logic high the value must exceed the V_{IH} of the input port. For a valid logic low the value must be less than the V_{IL} of the input port.

9.2.2.2 Output Voltage Range

Use the supply voltage of the device that the SN74AVC16T245 device is driving to determine the output voltage range.

9.2.3 Application Curve

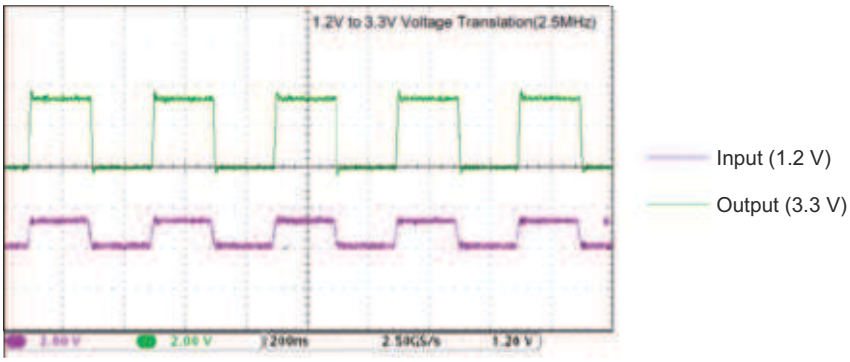

Figure 9-2. Translation Up (1.2 V to 3.3 V) at 2.5 MHz

9.3 Power Supply Recommendations

The SN74AVC16T245 device uses two separate configurable power-supply rails, V_{CCA} and V_{CCB}. VCCA accepts any supply voltage from 1.2 V to 3.6 V and V_{CCB} accepts any supply voltage from 1.2 V to 3.6 V. The A port and B port are designed to track V_{CCA} and V_{CCB}, respectively, allowing for low-voltage bidirectional translation between any of the 1.2-V, 1.5-V, 1.8-V, 2.5-V and 3.3-V voltage nodes.

The output-enable $\overline{OE}$ input circuit is designed so that it is supplied by V_{CCA} and when the $\overline{OE}$ input is high, all outputs are placed in the high-impedance state. To ensure the high-impedance state of the outputs during power up or power down, the $\overline{OE}$ input pin must be tied to V_{CCA} through a pullup resistor and must not be enabled until V_{CCA} and V_{CCB} are fully ramped and stable. The minimum value of the pullup resistor to V_{CCA} is determined by the current-sinking capability of the driver.

9.4 Layout

9.4.1 Layout Guidelines

To ensure reliability of the device, following common printed-circuit-board layout guidelines is recommended.

- Bypass capacitors should be used on power supplies.
- Short trace lengths should be used to avoid excessive loading.
- Placing pads on the signal paths for loading capacitors or pullup resistors to help adjust rise and fall times of signals depending on the system requirements.

Copyright © 2024 Texas Instruments Incorporated

9.4.2 Layout Example

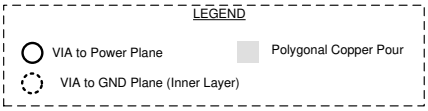

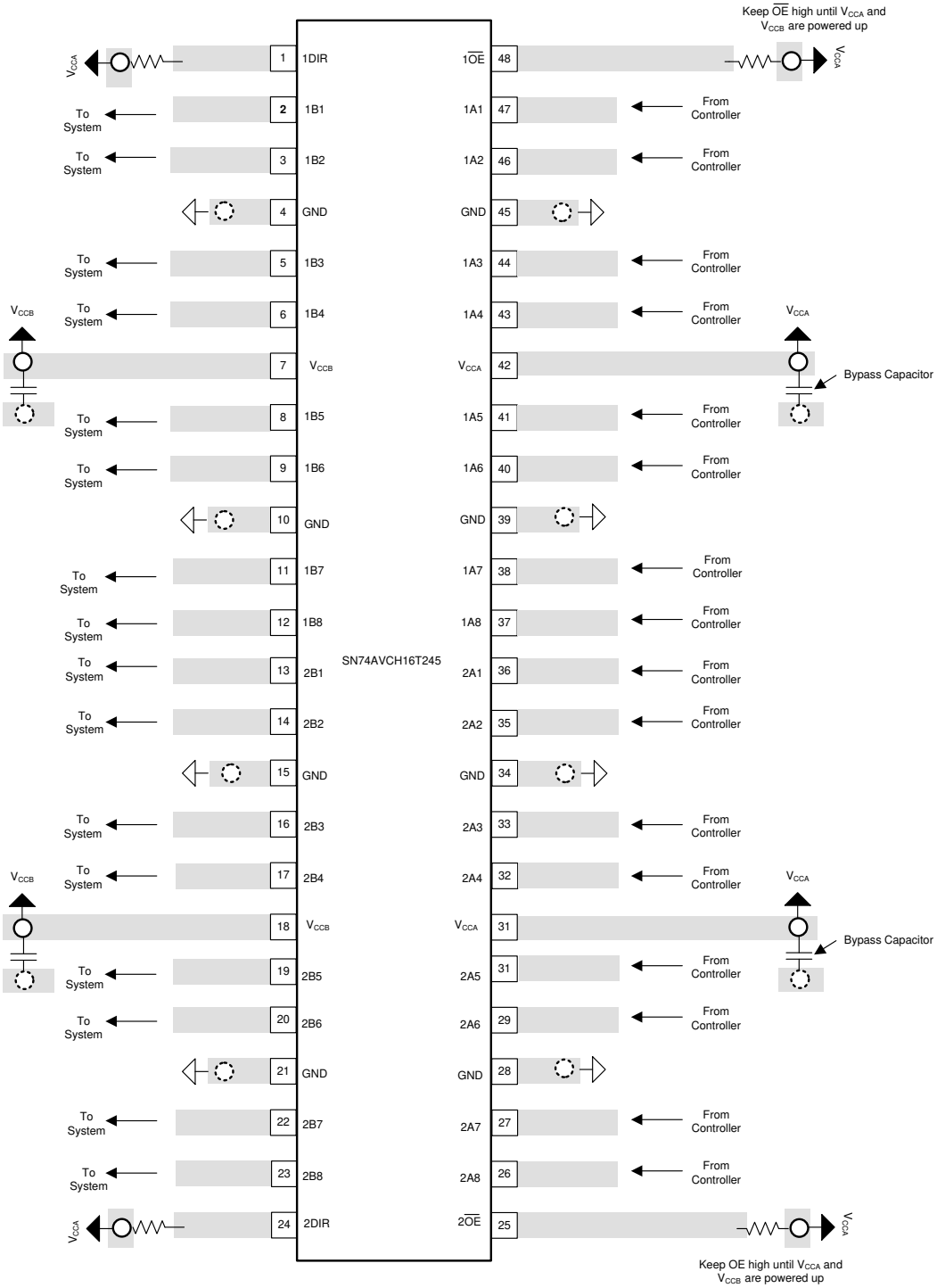

Figure 9-3. Recommended Layout Example

10 Device and Documentation Support

10.1 Documentation Support

10.1.1 Related Documentation

For related documentation see the following:

- *CMOS Power Consumption and Cpd Calculation*, SCAA035
- *Implications of Slow or Floating CMOS Inputs*, SCBA004

10.1.2 Receiving Notification of Documentation Updates

To receive notification of documentation updates, navigate to the device product folder on ti.com. Click on *Subscribe to updates* to register and receive a weekly digest of any product information that has changed. For change details, review the revision history included in any revised document.

10.2 Support Resources

TI E2E™ support forums are an engineer's go-to source for fast, verified answers and design help — straight from the experts. Search existing answers or ask your own question to get the quick design help you need.

Linked content is provided "AS IS" by the respective contributors. They do not constitute TI specifications and do not necessarily reflect TI's views; see TI's Terms of Use.

10.3 Trademarks

TI E2E™ is a trademark of Texas Instruments.
All trademarks are the property of their respective owners.

10.4 Electrostatic Discharge Caution

This integrated circuit can be damaged by ESD. Texas Instruments recommends that all integrated circuits be handled with appropriate precautions. Failure to observe proper handling and installation procedures can cause damage.

ESD damage can range from subtle performance degradation to complete device failure. Precision integrated circuits may be more susceptible to damage because very small parametric changes could cause the device not to meet its published specifications.

10.5 Glossary

TI Glossary	This glossary lists and explains terms, acronyms, and definitions.

11 Revision History

NOTE: Page numbers for previous revisions may differ from page numbers in the current version.

Changes from Revision E (July 2015) to Revision F (March 2024)	Page
• Updated the numbering format for tables, figures, and cross-references throughout the document	4

Changes from Revision D (February 2015) to Revision E (July 2015)	Page
• Updated Pin Functions Table.	4

Changes from Revision C (August 2005) to Revision D (February 2015)	Page
• Added *ESD Ratings* table, *Feature Description* section, *Device Functional Modes*, *Application and Implementation* section, *Power Supply Recommendations* section, *Layout* section, *Device and Documentation Support* section, and *Mechanical, Packaging, and Orderable Information* section	1

Copyright © 2024 Texas Instruments Incorporated

12 Mechanical, Packaging, and Orderable Information

The following pages include mechanical, packaging, and orderable information. This information is the most current data available for the designated devices. This data is subject to change without notice and revision of this document. For browser-based versions of this data sheet, refer to the left-hand navigation.

PACKAGING INFORMATION

Orderable part number	Status (1)	Material type (2)	Package | Pins	Package qty | Carrier	RoHS (3)	Lead finish/ Ball material (4)	MSL rating/ Peak reflow (5)	Op temp (°C)	Part marking (6)
74AVC16T245DGGRG4	Active	Production	TSSOP (DGG) | 48	2000 | LARGE T&R	Yes	NIPDAU	Level-1-260C-UNLIM	-40 to 85	AVC16T245
74AVC16T245DGGRG4.B	Active	Production	TSSOP (DGG) | 48	2000 | LARGE T&R	Yes	NIPDAU	Level-1-260C-UNLIM	-40 to 85	AVC16T245
74AVC16T245DGVRE4	Active	Production	TVSOP (DGV) | 48	2000 | LARGE T&R	Yes	NIPDAU	Level-1-260C-UNLIM	-40 to 85	WF245
AVC16T245DGGR-D	Active	Production	TSSOP (DGG) | 48	2000 | LARGE T&R	Yes	NIPDAU	Level-1-260C-UNLIM	-40 to 85	AVC16T245
SN74AVC16T245DGG	Active	Production	TSSOP (DGG) | 48	40 | TUBE	Yes	NIPDAU	Level-1-260C-UNLIM	-40 to 85	AVC16T245
SN74AVC16T245DGG.B	Active	Production	TSSOP (DGG) | 48	40 | TUBE	Yes	NIPDAU	Level-1-260C-UNLIM	-40 to 85	AVC16T245
SN74AVC16T245DGGR	Active	Production	TSSOP (DGG) | 48	2000 | LARGE T&R	Yes	NIPDAU	Level-1-260C-UNLIM	-40 to 85	AVC16T245
SN74AVC16T245DGGR.B	Active	Production	TSSOP (DGG) | 48	2000 | LARGE T&R	Yes	NIPDAU	Level-1-260C-UNLIM	-40 to 85	AVC16T245
SN74AVC16T245DGVR	Active	Production	TVSOP (DGV) | 48	2000 | LARGE T&R	Yes	NIPDAU	Level-1-260C-UNLIM	-40 to 85	WF245
SN74AVC16T245DGVR.B	Active	Production	TVSOP (DGV) | 48	2000 | LARGE T&R	Yes	NIPDAU	Level-1-260C-UNLIM	-40 to 85	WF245

(1) **Status:** For more details on status, see our product life cycle.

(2) **Material type:** When designated, preproduction parts are prototypes/experimental devices, and are not yet approved or released for full production. Testing and final process, including without limitation quality assurance, reliability performance testing, and/or process qualification, may not yet be complete, and this item is subject to further changes or possible discontinuation. If available for ordering, purchases will be subject to an additional waiver at checkout, and are intended for early internal evaluation purposes only. These items are sold without warranties of any kind.

(3) **RoHS values:** Yes, No, RoHS Exempt. See the TI RoHS Statement for additional information and value definition.

(4) **Lead finish/Ball material:** Parts may have multiple material finish options. Finish options are separated by a vertical ruled line. Lead finish/Ball material values may wrap to two lines if the finish value exceeds the maximum column width.

(5) **MSL rating/Peak reflow:** The moisture sensitivity level ratings and peak solder (reflow) temperatures. In the event that a part has multiple moisture sensitivity ratings, only the lowest level per JEDEC standards is shown. Refer to the shipping label for the actual reflow temperature that will be used to mount the part to the printed circuit board.

(6) **Part marking:** There may be an additional marking, which relates to the logo, the lot trace code information, or the environmental category of the part.

Multiple part markings will be inside parentheses. Only one part marking contained in parentheses and separated by a "~" will appear on a part. If a line is indented then it is a continuation of the previous line and the two combined represent the entire part marking for that device.

Important Information and Disclaimer: The information provided on this page represents TI's knowledge and belief as of the date that it is provided. TI bases its knowledge and belief on information provided by third parties, and makes no representation or warranty as to the accuracy of such information. Efforts are underway to better integrate information from third parties. TI has taken and continues to take reasonable steps to provide representative

and accurate information but may not have conducted destructive testing or chemical analysis on incoming materials and chemicals. TI and TI suppliers consider certain information to be proprietary, and thus CAS numbers and other limited information may not be available for release.

In no event shall TI's liability arising out of such information exceed the total purchase price of the TI part(s) at issue in this document sold by TI to Customer on an annual basis.

OTHER QUALIFIED VERSIONS OF SN74AVC16T245 :

- Automotive : SN74AVC16T245-Q1

NOTE: Qualified Version Definitions:

- Automotive - Q100 devices qualified for high-reliability automotive applications targeting zero defects

TAPE AND REEL INFORMATION

REEL DIMENSIONS

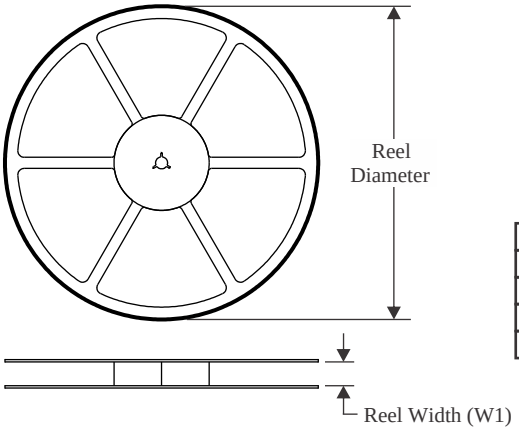

TAPE DIMENSIONS

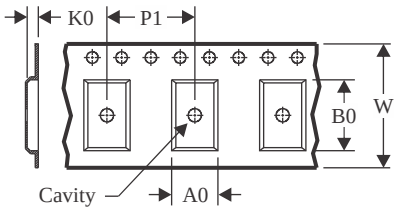

A0	Dimension designed to accommodate the component width
B0	Dimension designed to accommodate the component length
K0	Dimension designed to accommodate the component thickness
W	Overall width of the carrier tape
P1	Pitch between successive cavity centers

QUADRANT ASSIGNMENTS FOR PIN 1 ORIENTATION IN TAPE

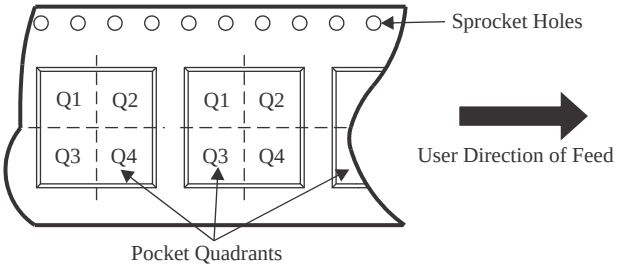

*All dimensions are nominal

Device	Package Type	Package Drawing	Pins	SPQ	Reel Diameter (mm)	Reel Width W1 (mm)	A0 (mm)	B0 (mm)	K0 (mm)	P1 (mm)	W (mm)	Pin1 Quadrant
74AVC16T245DGGRG4	TSSOP	DGG	48	2000	330.0	24.4	8.6	13.0	1.8	12.0	24.0	Q1
SN74AVC16T245DGGR	TSSOP	DGG	48	2000	330.0	24.4	8.6	13.0	1.8	12.0	24.0	Q1
SN74AVC16T245DGVR	TVSOP	DGV	48	2000	330.0	16.4	7.1	10.2	1.6	12.0	16.0	Q1

TAPE AND REEL BOX DIMENSIONS

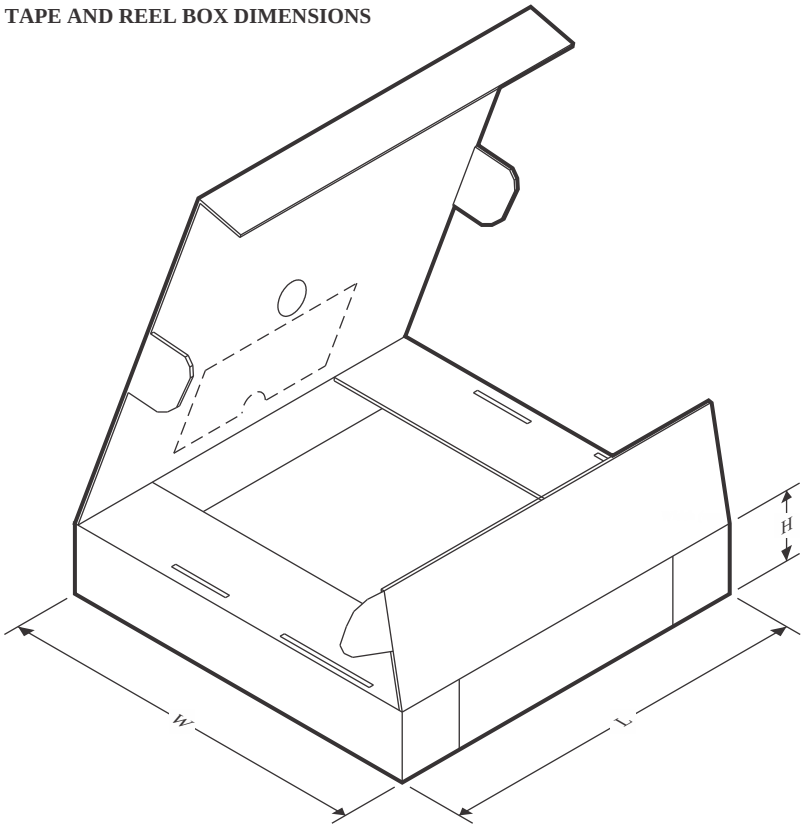

*All dimensions are nominal

Device	Package Type	Package Drawing	Pins	SPQ	Length (mm)	Width (mm)	Height (mm)
74AVC16T245DGGRG4	TSSOP	DGG	48	2000	356.0	356.0	45.0
SN74AVC16T245DGGR	TSSOP	DGG	48	2000	356.0	356.0	45.0
SN74AVC16T245DGVR	TVSOP	DGV	48	2000	353.0	353.0	32.0

TUBE

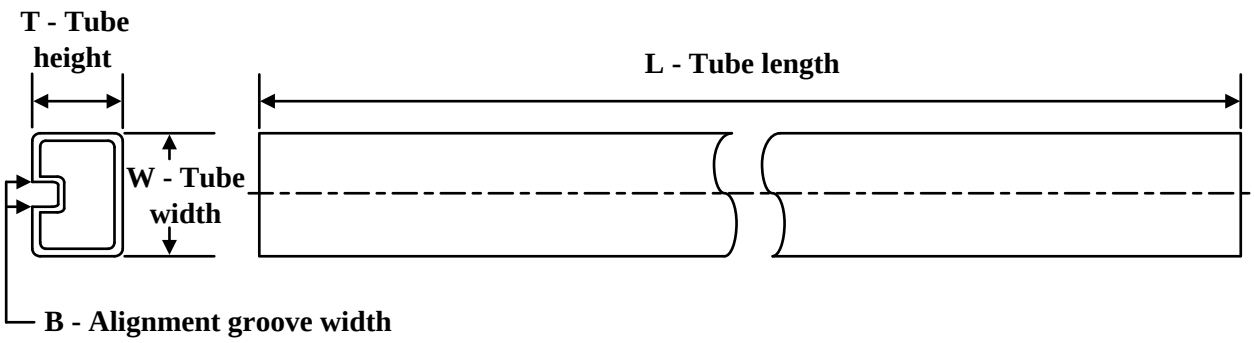

*All dimensions are nominal

Device	Package Name	Package Type	Pins	SPQ	L (mm)	W (mm)	T (µm)	B (mm)
SN74AVC16T245DGG	DGG	TSSOP	48	40	530	11.89	3600	4.9
SN74AVC16T245DGG.B	DGG	TSSOP	48	40	530	11.89	3600	4.9

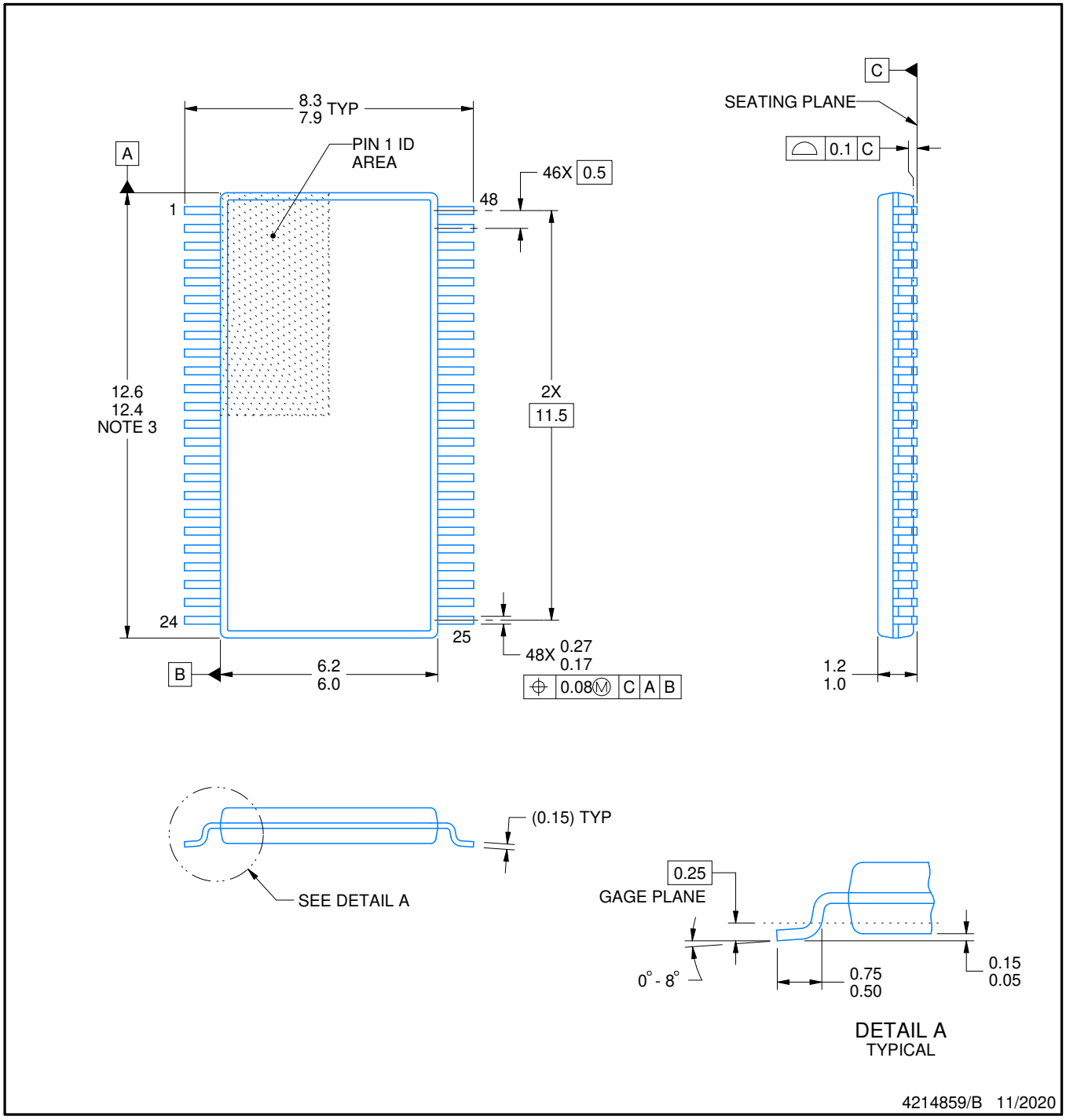

NOTES:

1. All linear dimensions are in millimeters. Any dimensions in parenthesis are for reference only. Dimensioning and tolerancing per ASME Y14.5M.
2. This drawing is subject to change without notice.
3. This dimension does not include mold flash, protrusions, or gate burrs. Mold flash, protrusions, or gate burrs shall not exceed 0.15 mm per side.
4. Reference JEDEC registration MO-153.

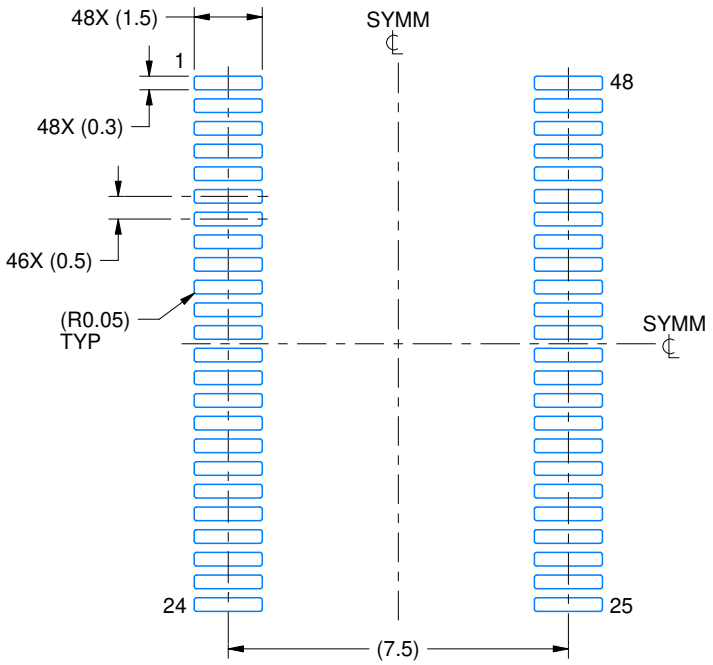

LAND PATTERN EXAMPLE
SCALE:6X

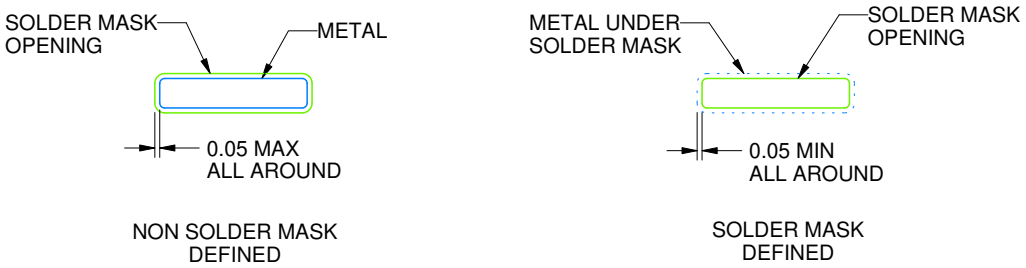

SOLDER MASK DETAILS

4214859/B 11/2020

NOTES: (continued)

5. Publication IPC-7351 may have alternate designs.
6. Solder mask tolerances between and around signal pads can vary based on board fabrication site.

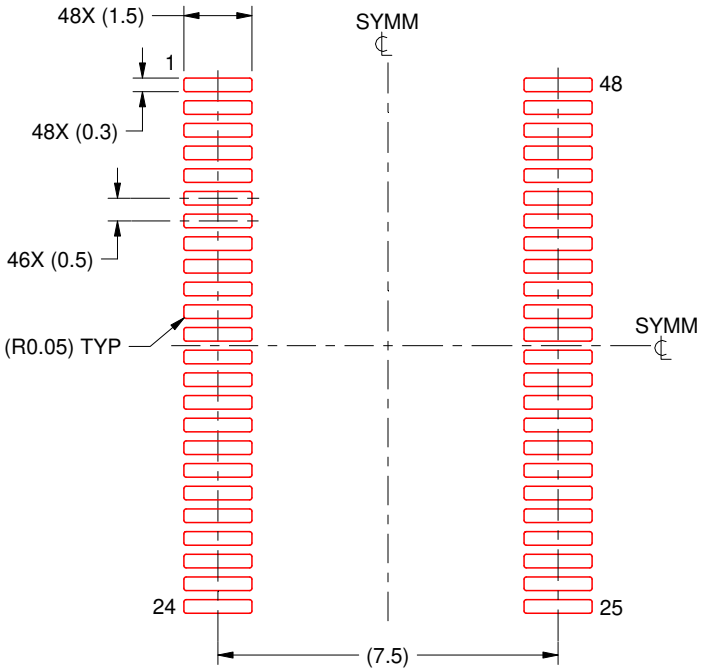

SOLDER PAPTE EXAMPLE
BASED ON 0.125 mm THICK STENCIL
SCALE:6X

4214859/B 11/2020

NOTES: (continued)

7. Laser cutting apertures with trapezoidal walls and rounded corners may offer better paste release. IPC-7525 may have alternate design recommendations.
8. Board assembly site may have different recommendations for stencil design.

DGG (R-PDSO-G)** **PLASTIC SMALL-OUTLINE PACKAGE**

48 PINS SHOWN

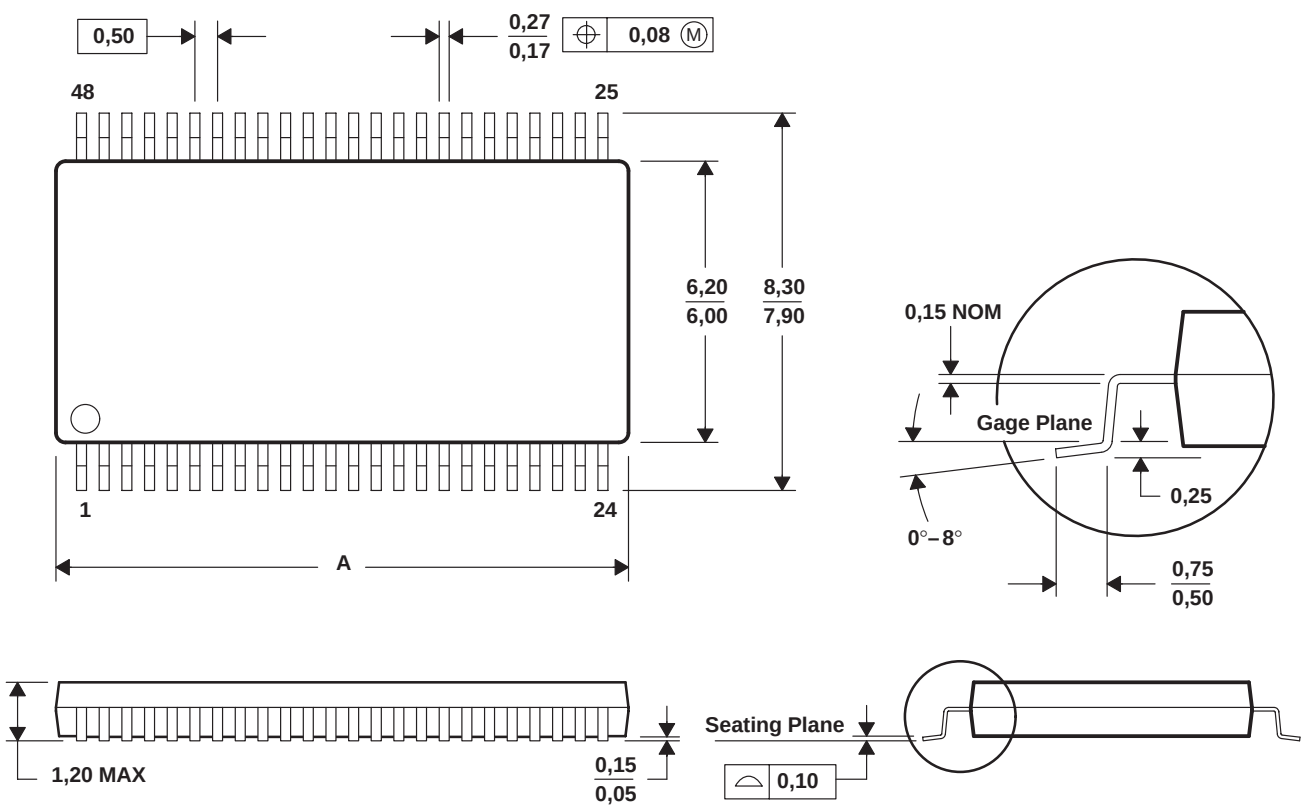

DIM \ PINS **	48	56	64
A MAX	12,60	14,10	17,10
A MIN	12,40	13,90	16,90

4040078/F 12/97

NOTES: A. All linear dimensions are in millimeters.
B. This drawing is subject to change without notice.
C. Body dimensions do not include mold protrusion not to exceed 0,15.
D. Falls within JEDEC MO-153

IMPORTANT NOTICE AND DISCLAIMER

TI PROVIDES TECHNICAL AND RELIABILITY DATA (INCLUDING DATASHEETS), DESIGN RESOURCES (INCLUDING REFERENCE DESIGNS), APPLICATION OR OTHER DESIGN ADVICE, WEB TOOLS, SAFETY INFORMATION, AND OTHER RESOURCES “AS IS” AND WITH ALL FAULTS, AND DISCLAIMS ALL WARRANTIES, EXPRESS AND IMPLIED, INCLUDING WITHOUT LIMITATION ANY IMPLIED WARRANTIES OF MERCHANTABILITY, FITNESS FOR A PARTICULAR PURPOSE OR NON-INFRINGEMENT OF THIRD PARTY INTELLECTUAL PROPERTY RIGHTS.

These resources are intended for skilled developers designing with TI products. You are solely responsible for (1) selecting the appropriate TI products for your application, (2) designing, validating and testing your application, and (3) ensuring your application meets applicable standards, and any other safety, security, regulatory or other requirements.

These resources are subject to change without notice. TI grants you permission to use these resources only for development of an application that uses the TI products described in the resource. Other reproduction and display of these resources is prohibited. No license is granted to any other TI intellectual property right or to any third party intellectual property right. TI disclaims responsibility for, and you fully indemnify TI and its representatives against any claims, damages, costs, losses, and liabilities arising out of your use of these resources.

TI’s products are provided subject to TI’s Terms of Sale, TI’s General Quality Guidelines, or other applicable terms available either on ti.com or provided in conjunction with such TI products. TI’s provision of these resources does not expand or otherwise alter TI’s applicable warranties or warranty disclaimers for TI products. Unless TI explicitly designates a product as custom or customer-specified, TI products are standard, catalog, general purpose devices.

TI objects to and rejects any additional or different terms you may propose.

Copyright © 2026, Texas Instruments Incorporated

Last updated 10/2025