SNx4HC138 3-Line To 8-Line Decoders/Demultiplexers

1 Features

- Targeted Specifically for High-Speed Memory Decoders and Data-Transmission Systems
- Wide Operating Voltage Range (2 V to 6 V)
- Outputs Can Drive Up To 10 LSTTL Loads
- Low Power Consumption, 80-μA Maximum I_{CC}
- Typical t_{pd} = 15 ns
- ±4-mA Output Drive at 5 V
- Low Input Current of 1-μA Maximum
- Active Low Outputs (Selected Output is Low)
- Incorporate Three Enable Inputs to Simplify Cascading or Data Reception

2 Applications

- LED Displays
- Servers
- White Goods
- Power Infrastructure
- Building Automation
- Factory Automation

3 Description

The SNx4HC138 devices are designed to be used in high-performance memory-decoding or data-routing applications requiring very short propagation delay times. In high-performance memory systems, these decoders can be used to minimize the effects of system decoding. When employed with high-speed memories using a fast enable circuit, the delay times of these decoders and the enable time of the memory are usually less than the typical access time of the memory. This means that the effective system delay introduced by the decoders is negligible.

Device Information

PART NUMBER	PACKAGE(1)	BODY SIZE (NOM)
SN74HC138D	SOIC (16)	9.90 mm x 3.90 mm
SN74HC138DB	SSOP (16)	6.20 mm x 5.30 mm
SN74HC138N	PDIP (16)	19.32 mm x 6.35 mm
SN74HC138NS	SO (16)	10.20 mm x 5.30 mm
SN74HC138PW	TSSOP (16)	5.00 mm x 4.40 mm
SN54HC138J	CDIP (16)	21.34 mm x 6.92 mm
SN54HC138W	CFP (16)	10.16 mm x 6.73 mm
SN54HC138FK	LCCC (20)	8.89 mm x 8.89 mm

(1) For all available packages, see the orderable addendum at the end of the data sheet.

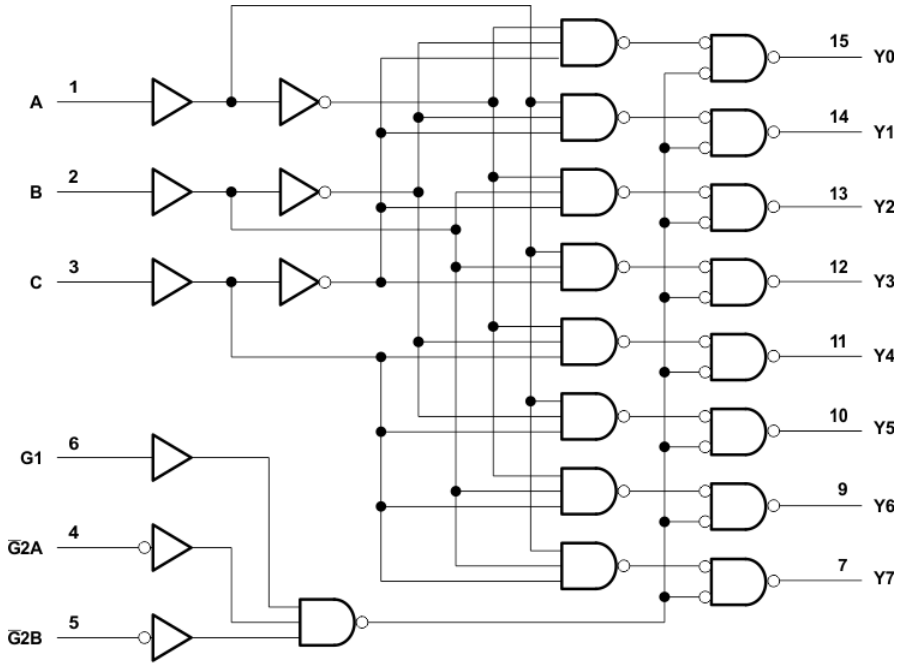

Copyright © 2016, Texas Instruments Incorporated

Pin numbers shown are for the D, DB, J, N, NS, PW, and W packages.

Functional Block Diagram

An IMPORTANT NOTICE at the end of this data sheet addresses availability, warranty, changes, use in safety-critical applications, intellectual property matters and other important disclaimers. PRODUCTION DATA.

Table of Contents

1 Features....1
2 Applications....1
3 Description....1
4 Revision History....2
5 Pin Configuration and Functions....3
Pin Functions....3
6 Specifications....4
6.1 Absolute Maximum Ratings....4
6.2 ESD Ratings: SN74HC138....4
6.3 Recommended Operating Conditions....4
6.4 Thermal Information: SN74HC138....5
6.5 Thermal Information: SN54HC138....5
6.6 Electrical Characteristics....5
6.7 Electrical Characteristics: SN74HC138....6
6.8 Electrical Characteristics: SN54HC138....6
6.9 Switching Characteristics....6
6.10 Switching Characteristics: SN74HC138....7
6.11 Switching Characteristics: SN54HC138....7
6.12 Typical Characteristic....7
7 Parameter Measurement Information....8
8 Detailed Description....9
8.1 Overview....9
8.2 Functional Block Diagram....9
8.3 Feature Description....9
8.4 Device Functional Modes....10
9 Application and Implementation....11
9.1 Application Information....11
9.2 Typical Application....11
10 Power Supply Recommendations....12
11 Layout....12
11.1 Layout Guidelines....12
11.2 Layout Example....12
12 Device and Documentation Support....13
12.1 Documentation Support....13
12.2 Related Links....13
12.3 Receiving Notification of Documentation Updates....13
12.4 Support Resources....13
12.5 Trademarks....13
12.6 Electrostatic Discharge Caution....13
12.7 Glossary....13
13 Mechanical, Packaging, and Orderable Information....13

4 Revision History

NOTE: Page numbers for previous revisions may differ from page numbers in the current version.

Changes from Revision E (September 2003) to Revision F (September 2016)	Page
• Added *ESD Ratings* table, *Feature Description* section, *Device Functional Modes*, *Application and Implementation* section, *Power Supply Recommendations* section, *Layout* section, *Device and Documentation Support* section, and *Mechanical, Packaging, and Orderable Information* section	1
• Deleted Ordering Information table; see POA at the end of the data sheet	1
• Changed $R_{\theta JA}$ values from 73 to 87.3 (D), from 82 to 104.3 (DB), from 67 to 54.8 (N), from 64 to 91.1 (NS), and from 108 to 114.6 (PW)	5

Changes from Revision F (September 2016) to Revision G (October 2021)	Page
• Updated the ESD ratings table to fit modern data sheet standards	4

Copyright © 2021 Texas Instruments Incorporated

5 Pin Configuration and Functions

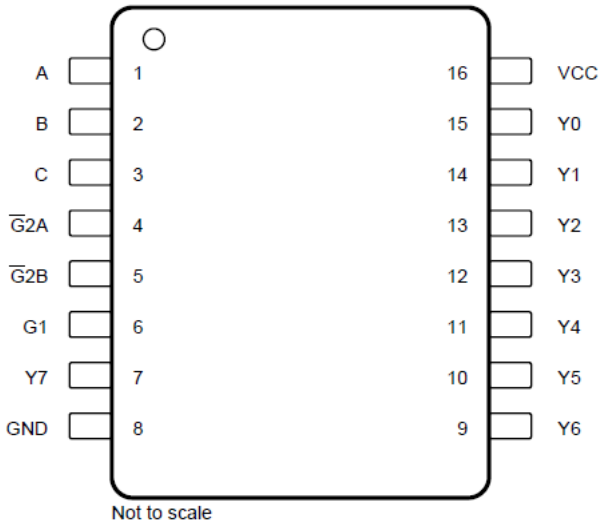

SOIC, SSOP, PDIP, SO, TSSOP, CDIP, or CFP Package
16-Pin D, DB, N, NS, PW, J or W
Top View

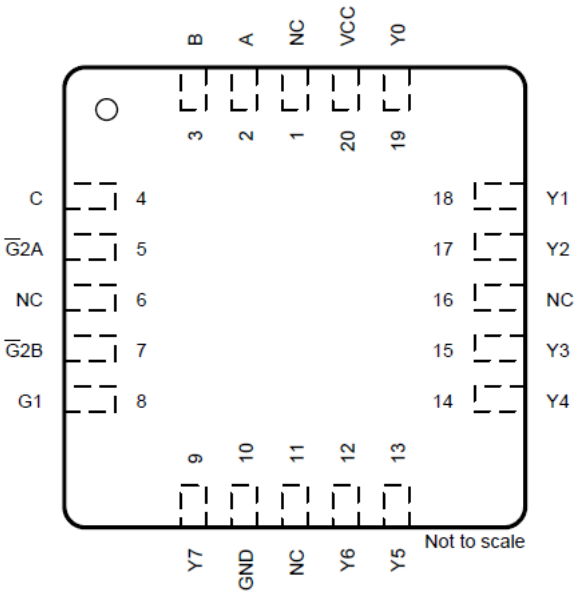

NC: No internal connection

LCCC Package
20-Pin FK
Top View

Pin Functions

PIN			I/O[(1)]	DESCRIPTION
NAME	SOIC, SSOP, PDIP, SO, TSSOP, CDIP, CFP	LCCC		
A	1	2	I	Select input A (least significant bit)
B	2	3	I	Select input B
C	3	4	I	Select input C (most significant bit)
$\overline{G}$2A	4	5	I	Active low enable A
$\overline{G}$2B	5	7	I	Active low enable B
G1	6	8	I	Active high enable
GND	8	10	—	Ground
NC	—	1, 6, 11, 16	—	No internal connection
V_{CC}	16	20	—	Supply voltage
Y0	15	19	O	Output 0 (least significant bit)
Y1	14	18	O	Output 1
Y2	13	17	O	Output 2
Y3	12	15	O	Output 3
Y4	11	14	O	Output 4
Y5	10	13	O	Output 5
Y6	9	12	O	Output 6
Y7	7	9	O	Output 7 (most significant bit)

(1) Signal Types: I = Input, O = Output, I/O = Input or Output.

Copyright © 2021 Texas Instruments Incorporated

6 Specifications

6.1 Absolute Maximum Ratings

over operating free-air temperature range (unless otherwise noted)[1]

			MIN	MAX	UNIT
V_{CC}	Supply voltage range		–0.5	7	V
I_{IK}	Input clamp current[2]	$V_I < 0$ or $V_I > V_{CC}$		±20	mA
I_{OK}	Output clamp current[2]	$V_O < 0$ or $V_O > V_{CC}$		±20	mA
I_O	Continuous output current	$V_O = 0$ to V_{CC}		±25	mA
	Continuous current through V_{CC} or GND			±50	mA
T_J	Junction temperature			150	°C
T_{stg}	Storage temperature		–65	150	°C

(1) Stresses beyond those listed under *Absolute Maximum Ratings* may cause permanent damage to the device. These are stress ratings only, which do not imply functional operation of the device at these or any other conditions beyond those indicated under *Recommended Operating Conditions*. Exposure to absolute-maximum-rated conditions for extended periods may affect device reliability.
(2) The input and output voltage ratings may be exceeded if the input and output current ratings are observed.

6.2 ESD Ratings: SN74HC138

			VALUE	UNIT
$V_{(ESD)}$	Electrostatic discharge	Human-body model (HBM), per ANSI/ESDA/JEDEC JS-001[1]	±2000	V
		Charged device model (CDM), per ANSI/ESDA/JEDEC JS-002[2]	±1000	

(1) JEDEC document JEP155 states that 500-V HBM allows safe manufacturing with a standard ESD control process.
(2) JEDEC document JEP157 states that 250-V CDM allows safe manufacturing with a standard ESD control process.

6.3 Recommended Operating Conditions

over operating free-air temperature range (unless otherwise noted)[1]

			MIN	NOM	MAX	UNIT
V_{CC}	Supply voltage		2	5	6	V
V_{IH}	High-level input voltage	V_{CC} = 2 V	1.5			V
		V_{CC} = 4.5 V	3.15			
		V_{CC} = 6 V	4.2			
V_{IL}	Low-level input voltage	V_{CC} = 2 V			0.5	V
		V_{CC} = 4.5 V			1.35	
		V_{CC} = 6 V			1.8	
V_I	Input voltage		0		V_{CC}	V
V_O	Output voltage		0		V_{CC}	V
Δt/Δv	Input transition rise or fall time	V_{CC} = 2 V			1000	ns
		V_{CC} = 4.5 V			500	
		V_{CC}= 6 V			400	
C_{pd}	Power dissipation capacitance (no load)			85		pF
T_A	Operating free-air temperature	SN54HC138	–55		125	°C
		SN74HC138	–40		85	

(1) All unused inputs of the device must be held at V_{CC} or GND to ensure proper device operation. See TI application report, *Implications of Slow or Floating CMOS Inputs* (SCBA004).

Copyright © 2021 Texas Instruments Incorporated

6.4 Thermal Information: SN74HC138

THERMAL METRIC[1]		SN74HC138					UNIT
		D (SOIC)	DB (SSOP)	N (PDIP)	NS (SO)	PW (TSSOP)	
		16 PINS	16 PINS	16 PINS	16 PINS	16 PINS	
$R_{\theta JA}$	Junction-to-ambient thermal resistance	87.3	104.3	54.8	91.1	141.6	°C/W
$R_{\theta JC(top)}$	Junction-to-case (top) thermal resistance	45.8	54.7	42.1	49.5	49.5	°C/W
$R_{\theta JB}$	Junction-to-board thermal resistance	44.8	54.9	34.8	51.5	59.6	°C/W
ψ_{JT}	Junction-to-top characterization parameter	14.2	17.7	27	17.8	6.9	°C/W
ψ_{JB}	Junction-to-board characterization parameter	44.5	54.4	34.7	51.2	59.1	°C/W

(1) For more information about traditional and new thermal metrics, see the *Semiconductor and IC Package Thermal Metrics* application report.

6.5 Thermal Information: SN54HC138

THERMAL METRIC[1]		SN54HC138[2]			UNIT
		J (CDIP)	W (CFP)	FK (LCCC)	
		16 PINS	16 PINS	20 PINS	
$R_{\theta JA}$	Junction-to-ambient thermal resistance	—	—	—	°C/W
$R_{\theta JC(top)}$	Junction-to-case (top) thermal resistance	45.4	68.1	49	°C/W
$R_{\theta JB}$	Junction-to-board thermal resistance	—	118.4	47.7	°C/W
ψ_{JT}	Junction-to-top characterization parameter	—	—	7.2	°C/W
ψ_{JB}	Junction-to-board characterization parameter	62.5	—	—	°C/W
$R_{\theta JC(bot)}$	Junction-to-case (bottom) thermal resistance	17.7	9	—	°C/W

(1) For more information about traditional and new thermal metrics, see the *Semiconductor and IC Package Thermal Metrics* application report.
(2) $R_{\theta JC}$ follows MIL-STD-883, and $R_{\theta JB}$ follows JESD51.

6.6 Electrical Characteristics

T_A = 25°C (unless otherwise noted)

PARAMETER	TEST CONDITIONS			MIN	TYP	MAX	UNIT
V_{OH}	$V_I = V_{IH}$ or V_{IL}	I_{OH} = –20 µA	V_{CC} = 2 V	1.9	1.998		V
			V_{CC} = 4.5 V	4.4	4.499		
			V_{CC} = 6 V	5.9	5.999		
		I_{OH} = –4 mA, V_{CC} = 4.5 V		3.98	4.3		
		I_{OH}= –5.2 mA, V_{CC} = 6 V		5.48	5.8		
V_{OL}	$V_I = V_{IH}$ or V_{IL}	I_{OL} = 20 µA	V_{CC} = 2 V		0.002	0.1	V
			V_{CC} = 4.5 V		0.001	0.1	
			V_{CC} = 6 V		0.001	0.1	
		I_{OL} = 4 mA, V_{CC} = 4.5 V			0.17	0.26	
		I_{OL} = 5.2 mA, V_{CC} = 6 V			0.15	0.26	
I_I	$V_I = V_{CC}$ or 0, V_{CC} = 6 V				±0.1	±100	nA
I_{CC}	$V_I = V_{CC}$ or 0, I_O = 0, V_{CC} = 6 V					8	µA
C_i	V_{CC} = 2 V to 6 V				3	10	pF

6.7 Electrical Characteristics: SN74HC138

over operating free-air temperature range (unless otherwise noted)

PARAMETER	TEST CONDITIONS			MIN	TYP	MAX	UNIT
V_{OH}	$V_I = V_{IH}$ or V_{IL}	$I_{OH} = –20$ µA	$V_{CC} = 2$ V	1.9			V
			$V_{CC} = 4.5$ V	4.4			
			$V_{CC} = 6$ V	5.9			
		$I_{OH} = –4$ mA, $V_{CC} = 4.5$ V		3.84			
		$I_{OH} = –5.2$ mA, $V_{CC} = 6$ V		5.34			
V_{OL}	$V_I = V_{IH}$ or V_{IL}	$I_{OL} = 20$ µA	$V_{CC} = 2$ V			0.1	V
			$V_{CC} = 4.5$ V			0.1	
			$V_{CC} = 6$ V			0.1	
		$I_{OL} = 4$ mA, $V_{CC} = 4.5$ V				0.33	
		$I_{OL} = 5.2$ mA, $V_{CC} = 6$ V				0.33	
I_I	$V_I = V_{CC}$ or 0, $V_{CC} = 6$ V					±1000	nA
I_{CC}	$V_I = V_{CC}$ or 0, $I_O = 0$, $V_{CC} = 6$ V					80	µA
C_i	$V_{CC} = 2$ V to 6 V					10	pF

6.8 Electrical Characteristics: SN54HC138

over operating free-air temperature range (unless otherwise noted)

PARAMETER	TEST CONDITIONS		V_{CC}	MIN	TYP	MAX	UNIT
V_{OH}	$V_I = V_{IH}$ or V_{IL}	$I_{OH} = –20$ µA	$V_{CC} = 2$ V	1.9			V
			$V_{CC} = 4.5$ V	4.4			
			$V_{CC} = 6$ V	5.9			
		$I_{OH} = –4$ mA, $V_{CC} = 4.5$ V		3.7			
		$I_{OH} = –5.2$ mA, $V_{CC} = 6$ V		5.2			
V_{OL}	$V_I = V_{IH}$ or V_{IL}	$I_{OL} = 20$ µA	$V_{CC} = 2$ V			0.1	V
			$V_{CC} = 4.5$ V			0.1	
			$V_{CC} = 6$ V			0.1	
		$I_{OL} = 4$ mA, $V_{CC} = 4.5$ V				0.4	
		$I_{OL} = 5.2$ mA, $V_{CC} = 6$ V				0.4	
I_I	$V_I = V_{CC}$ or 0, $V_{CC} = 6$ V					±1000	nA
I_{CC}	$V_I = V_{CC}$ or 0, $I_O = 0$, $V_{CC} = 6$ V					160	µA
C_i	$V_{CC} = 2$ V to 6 V					10	pF

6.9 Switching Characteristics

$T_A = 25°C$ and $C_L = 50$ pF (unless otherwise noted; see *Section 7*)

PARAMETER	TEST CONDITIONS		MIN	TYP	MAX	UNIT
t_{pd}	From A, B, or C (input) to any Y (output)	$V_{CC} = 2$ V		67	180	ns
		$V_{CC} = 4.5$ V		18	36	
		$V_{CC} = 6$ V		15	31	
	From enable (input) to any Y (output)	$V_{CC} = 2$ V		66	155	
		$V_{CC} = 4.5$ V		18	31	
		$V_{CC} = 6$ V		15	26	
t_t	To any output	$V_{CC} = 2$ V		38	75	ns
		$V_{CC} = 4.5$ V		8	15	
		$V_{CC} = 6$ V		6	13	

Copyright © 2021 Texas Instruments Incorporated

6.10 Switching Characteristics: SN74HC138

over recommended operating free-air temperature range and C_L = 50 pF (unless otherwise noted; see *Section 7*)

PARAMETER	TEST CONDITIONS		MIN	TYP	MAX	UNIT
t_{pd}	From A, B, or C (input) to any Y (output)	V_{CC} = 2 V			225	ns
		V_{CC} = 4.5 V			45	
		V_{CC} = 6 V			38	
	From enable (input) to any Y (output)	V_{CC} = 2 V			195	
		V_{CC} = 4.5 V			39	
		V_{CC} = 6 V			33	
t_t	To any output	V_{CC} = 2 V			95	ns
		V_{CC} = 4.5 V			19	
		V_{CC} = 6 V			16	

6.11 Switching Characteristics: SN54HC138

over recommended operating free-air temperature range and C_L = 50 pF (unless otherwise noted; see *Section 7*)

PARAMETER	TEST CONDITIONS		MIN	TYP	MAX	UNIT
t_{pd}	From A, B, or C (input) to any Y (output)	V_{CC} = 2 V			270	ns
		V_{CC} = 4.5 V			54	
		V_{CC} = 6 V			46	
	From enable (input) to any Y (output)	V_{CC} = 2 V			235	
		V_{CC} = 4.5 V			47	
		V_{CC} = 6 V			40	
t_t	To any output	V_{CC} = 2 V			110	ns
		V_{CC} = 4.5 V			22	
		V_{CC} = 6 V			19	

6.12 Typical Characteristic

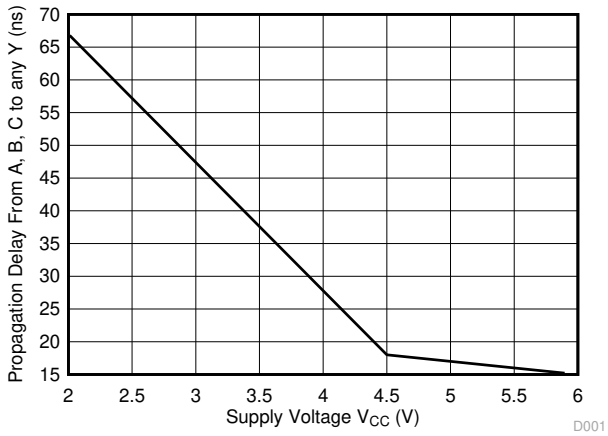

Figure 6-1. Typical Propagation Delay vs Supply Voltage

7 Parameter Measurement Information

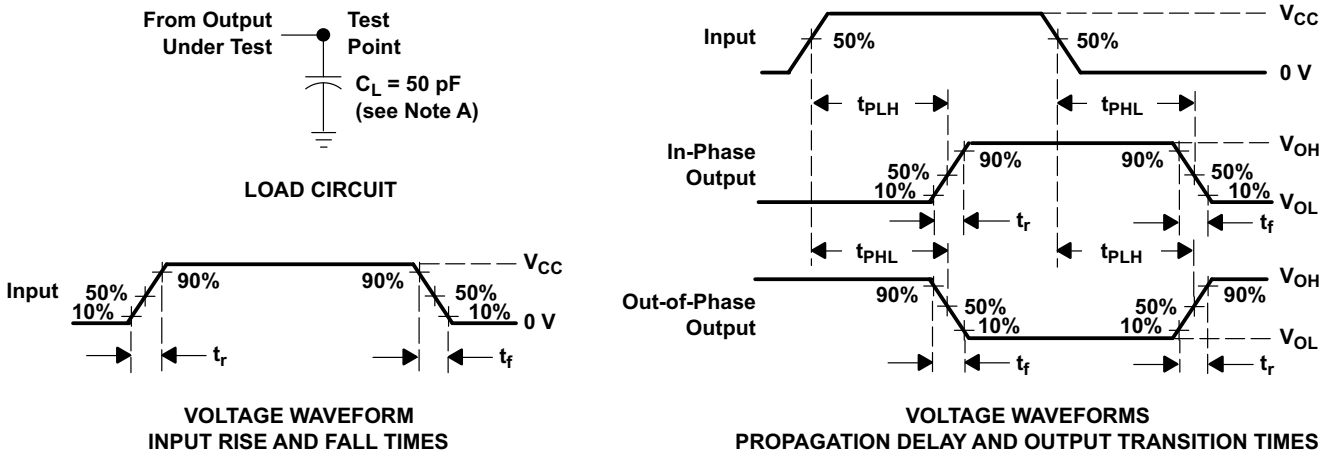

NOTES: A. C_L includes probe and test-fixture capacitance.
B. Phase relationships between waveforms were chosen arbitrarily. All input pulses are supplied by generators having the following characteristics: PRR ≤ 1 MHz, Z_O = 50 Ω, t_r = 6 ns, t_f = 6 ns.
C. The outputs are measured one at a time with one input transition per measurement.
D. t_{PLH} and t_{PHL} are the same as t_{pd}.

Figure 7-1. Load Circuit and Voltage Waveforms

Copyright © 2021 Texas Instruments Incorporated

8 Detailed Description

8.1 Overview

The SNx4HC138 devices are 3-to-8 decoders and demultiplexers. The three input pins, A, B, and C, select which output is active. The selected output is pulled LOW, while the remaining outputs are all HIGH. The conditions at the binary-select inputs at the three enable inputs select one of eight output lines. Two active-low and one active-high enable inputs reduce the requirement for external gates or inverters when expanding. A 24-line decoder can be implemented without external inverters, and a 32-line decoder requires only one inverter. An enable input can be used as a data input for demultiplexing applications.

8.2 Functional Block Diagram

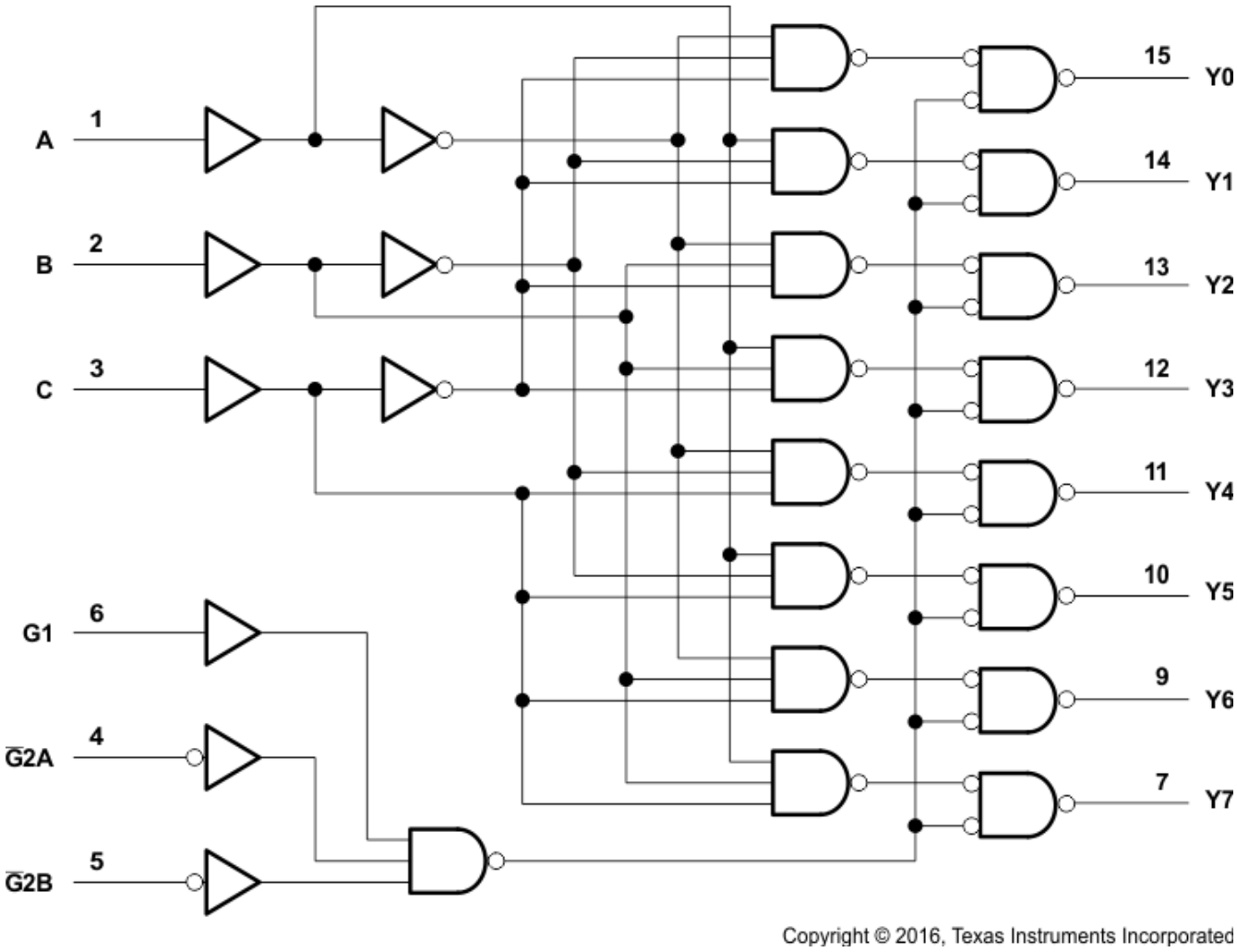

Pin numbers shown are for the D, DB, J, N, NS, PW, and W packages.

8.3 Feature Description

This device features three binary inputs to select a single active-low output. Three enable pins are also available to enable or disable the outputs. One active high enable and two active low enable pins are available, and any enable pin can be deactivated to force all outputs high. All three enable pins must be active for the output to be enabled.

8.4 Device Functional Modes

Table 8-1 lists the functions of the SNx4HC138 devices.

Table 8-1. Function Table

INPUTS						OUTPUTS							
ENABLE			SELECT										
G1	$\overline{G}$2A	$\overline{G}$2B	C	B	A	Y0	Y1	Y2	Y3	Y4	Y5	Y6	Y7
X	H	X	X	X	X	H	H	H	H	H	H	H	H
X	X	H	X	X	X	H	H	H	H	H	H	H	H
L	X	X	X	X	X	H	H	H	H	H	H	H	H
H	L	L	L	L	L	L	H	H	H	H	H	H	H
H	L	L	L	L	H	H	L	H	H	H	H	H	H
H	L	L	L	H	L	H	H	L	H	H	H	H	H
H	L	L	L	H	H	H	H	H	L	H	H	H	H
H	L	L	H	L	L	H	H	H	H	L	H	H	H
H	L	L	H	L	H	H	H	H	H	H	L	H	H
H	L	L	H	H	L	H	H	H	H	H	H	L	H
H	L	L	H	H	H	H	H	H	H	H	H	H	L

Copyright © 2021 Texas Instruments Incorporated

9 Application and Implementation

Note

Information in the following applications sections is not part of the TI component specification, and TI does not warrant its accuracy or completeness. TI's customers are responsible for determining suitability of components for their purposes, as well as validating and testing their design implementation to confirm system functionality.

9.1 Application Information

The SN74HC138 is useful as a scanning column selector for an LED Matrix display as it can be used for the low side drive of the LED string. The decoder functionality ensures that no more than one output is pulled to a low-level logic voltage so that only a single column is enabled at any point in time.

9.2 Typical Application

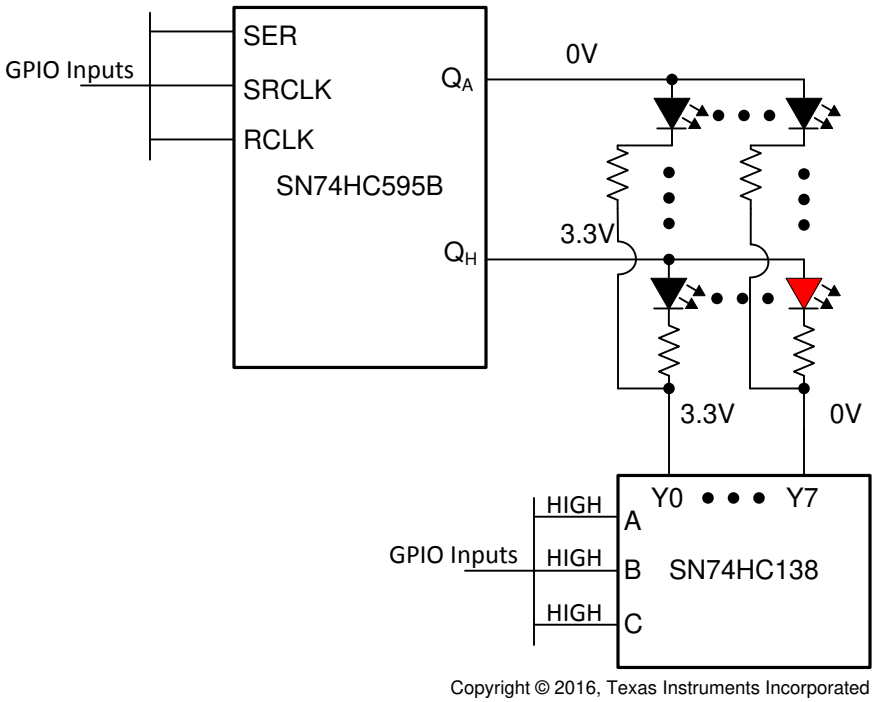

Figure 9-1. LED Matrix Driver Application

9.2.1 Design Requirements

These devices use CMOS technology and have balanced output drive. Take care to avoid bus contention because it can drive currents that would exceed maximum limits. The high drive also creates fast edges into light loads, so routing and load conditions must be considered to prevent ringing.

9.2.2 Detailed Design Procedure

1. Recommended Input Conditions
   - For switch time specifications, see propagation delay times in *Section 6.9*.
   - For input voltage level specifications for control inputs, see V_{IH} and V_{IL} in *Section 6.6*.
2. Recommended Output Conditions
   - Outputs must not be pulled above V_{CC} or below GND.

9.2.3 Application Curve

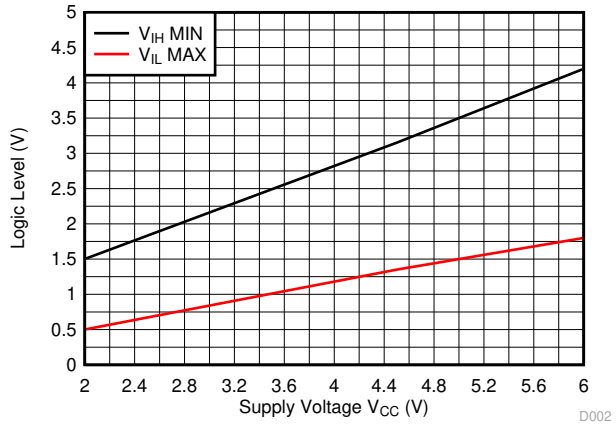

Figure 9-2. Input High and Input Low Thresholds vs Supply Voltage

10 Power Supply Recommendations

The power supply can be any voltage between the minimum and maximum supply voltage rating located in the *Section 6.3*.

Each V_{CC} terminal must have a good bypass capacitor to prevent power disturbance. A 0.1-µF bypass capacitor is recommended to be placed close to the V_{CC} terminal. It is acceptable to parallel multiple bypass capacitors to reject different frequencies of noise; 0.1-µF and 1-µF capacitors are commonly used in parallel. The bypass capacitor must be installed as close to the power terminal as possible for best results.

11 Layout

11.1 Layout Guidelines

Reflections and matching are closely related to loop antenna theory, but different enough to warrant their own discussion. When a PCB trace turns a corner at a 90° angle, a reflection can occur. This is primarily due to the change of width of the trace. At the apex of the turn, the trace width is increased to 1.414 times its width. This upsets the transmission line characteristics, especially the distributed capacitance and self–inductance of the trace (resulting in the reflection). It is a given that not all PCB traces can be straight, and so they have to turn corners. Figure 11-1 shows progressively better techniques of rounding corners. Only the last example maintains constant trace width and minimizes reflections.

11.2 Layout Example

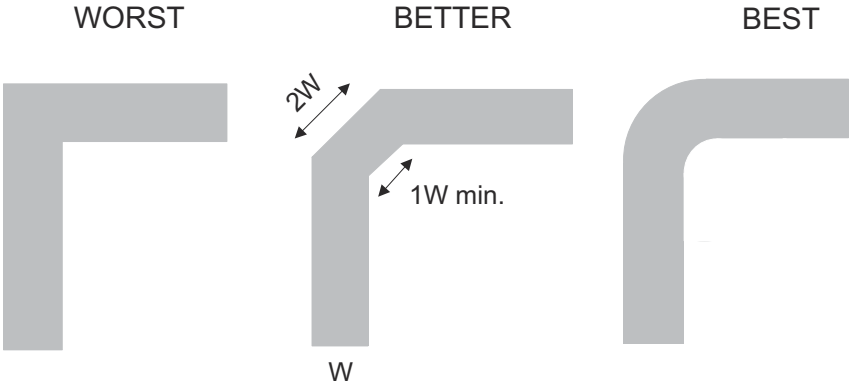

Figure 11-1. Trace Example

Copyright © 2021 Texas Instruments Incorporated

12 Device and Documentation Support

12.1 Documentation Support

12.1.1 Related Documentation

For related documentation see the following:

Implications of Slow or Floating CMOS Inputs (SCBA004)

12.2 Related Links

The table below lists quick access links. Categories include technical documents, support and community resources, tools and software, and quick access to sample or buy.

Table 12-1. Related Links

PARTS	PRODUCT FOLDER	SAMPLE & BUY	TECHNICAL DOCUMENTS	TOOLS & SOFTWARE	SUPPORT & COMMUNITY
SN54HC138	Click here	Click here	Click here	Click here	Click here
SN74HC138	Click here	Click here	Click here	Click here	Click here

12.3 Receiving Notification of Documentation Updates

To receive notification of documentation updates, navigate to the device product folder on ti.com. In the upper right corner, click on *Alert me* to register and receive a weekly digest of any product information that has changed. For change details, review the revision history included in any revised document.

12.4 Support Resources

TI E2E™ support forums are an engineer's go-to source for fast, verified answers and design help — straight from the experts. Search existing answers or ask your own question to get the quick design help you need.

Linked content is provided "AS IS" by the respective contributors. They do not constitute TI specifications and do not necessarily reflect TI's views; see TI's Terms of Use.

12.5 Trademarks

TI E2E™ is a trademark of Texas Instruments.
All trademarks are the property of their respective owners.

12.6 Electrostatic Discharge Caution

This integrated circuit can be damaged by ESD. Texas Instruments recommends that all integrated circuits be handled with appropriate precautions. Failure to observe proper handling and installation procedures can cause damage.

ESD damage can range from subtle performance degradation to complete device failure. Precision integrated circuits may be more susceptible to damage because very small parametric changes could cause the device not to meet its published specifications.

12.7 Glossary

TI Glossary This glossary lists and explains terms, acronyms, and definitions.

13 Mechanical, Packaging, and Orderable Information

The following pages include mechanical, packaging, and orderable information. This information is the most current data available for the designated devices. This data is subject to change without notice and revision of this document. For browser-based versions of this data sheet, refer to the left-hand navigation.

PACKAGING INFORMATION

Orderable part number	Status (1)	Material type (2)	Package | Pins	Package qty | Carrier	RoHS (3)	Lead finish/ Ball material (4)	MSL rating/ Peak reflow (5)	Op temp (°C)	Part marking (6)
5962-8406201VEA	Active	Production	CDIP (J) | 16	25 | TUBE	No	SNPB	N/A for Pkg Type	-55 to 125	5962-8406201VE A SNV54HC138J
5962-8406201VEA.A	Active	Production	CDIP (J) | 16	25 | TUBE	No	SNPB	N/A for Pkg Type	-55 to 125	5962-8406201VE A SNV54HC138J
5962-8406201VFA	Active	Production	CFP (W) | 16	25 | TUBE	No	SNPB	N/A for Pkg Type	-55 to 125	5962-8406201VF A SNV54HC138W
5962-8406201VFA.A	Active	Production	CFP (W) | 16	25 | TUBE	No	SNPB	N/A for Pkg Type	-55 to 125	5962-8406201VF A SNV54HC138W
84062012A	Active	Production	LCCC (FK) | 20	55 | TUBE	No	SNPB	N/A for Pkg Type	-55 to 125	84062012A SNJ54HC 138FK
8406201EA	Active	Production	CDIP (J) | 16	25 | TUBE	No	SNPB	N/A for Pkg Type	-55 to 125	8406201EA SNJ54HC138J
8406201FA	Active	Production	CFP (W) | 16	25 | TUBE	No	SNPB	N/A for Pkg Type	-55 to 125	8406201FA SNJ54HC138W
JM38510/65802B2A	Active	Production	LCCC (FK) | 20	55 | TUBE	No	SNPB	N/A for Pkg Type	-55 to 125	JM38510/ 65802B2A
JM38510/65802B2A.A	Active	Production	LCCC (FK) | 20	55 | TUBE	No	SNPB	N/A for Pkg Type	-55 to 125	JM38510/ 65802B2A
JM38510/65802BEA	Active	Production	CDIP (J) | 16	25 | TUBE	No	SNPB	N/A for Pkg Type	-55 to 125	JM38510/ 65802BEA
JM38510/65802BEA.A	Active	Production	CDIP (J) | 16	25 | TUBE	No	SNPB	N/A for Pkg Type	-55 to 125	JM38510/ 65802BEA
M38510/65802B2A	Active	Production	LCCC (FK) | 20	55 | TUBE	No	SNPB	N/A for Pkg Type	-55 to 125	JM38510/ 65802B2A
M38510/65802BEA	Active	Production	CDIP (J) | 16	25 | TUBE	No	SNPB	N/A for Pkg Type	-55 to 125	JM38510/ 65802BEA
SN54HC138J	Active	Production	CDIP (J) | 16	25 | TUBE	No	SNPB	N/A for Pkg Type	-55 to 125	SN54HC138J
SN54HC138J.A	Active	Production	CDIP (J) | 16	25 | TUBE	No	SNPB	N/A for Pkg Type	-55 to 125	SN54HC138J
SN74HC138D	Obsolete	Production	SOIC (D) | 16	-	-	Call TI	Call TI	-40 to 85	HC138

Orderable part number	Status (1)	Material type (2)	Package | Pins	Package qty | Carrier	RoHS (3)	Lead finish/ Ball material (4)	MSL rating/ Peak reflow (5)	Op temp (°C)	Part marking (6)
SN74HC138DBR	Active	Production	SSOP (DB) | 16	2000 | LARGE T&R	Yes	NIPDAU	Level-1-260C-UNLIM	-40 to 85	HC138
SN74HC138DBR.A	Active	Production	SSOP (DB) | 16	2000 | LARGE T&R	Yes	NIPDAU	Level-1-260C-UNLIM	-40 to 85	HC138
SN74HC138DR	Active	Production	SOIC (D) | 16	2500 | LARGE T&R	Yes	NIPDAU | SN	Level-1-260C-UNLIM	-40 to 85	HC138
SN74HC138DR.A	Active	Production	SOIC (D) | 16	2500 | LARGE T&R	Yes	NIPDAU	Level-1-260C-UNLIM	-40 to 85	HC138
SN74HC138DRE4	Active	Production	SOIC (D) | 16	2500 | LARGE T&R	Yes	NIPDAU	Level-1-260C-UNLIM	-40 to 85	HC138
SN74HC138DRG4	Active	Production	SOIC (D) | 16	2500 | LARGE T&R	Yes	NIPDAU	Level-1-260C-UNLIM	-40 to 85	HC138
SN74HC138DRG4.A	Active	Production	SOIC (D) | 16	2500 | LARGE T&R	Yes	NIPDAU	Level-1-260C-UNLIM	-40 to 85	HC138
SN74HC138DT	Obsolete	Production	SOIC (D) | 16	-	-	Call TI	Call TI	-40 to 85	HC138
SN74HC138N	Active	Production	PDIP (N) | 16	25 | TUBE	Yes	NIPDAU	N/A for Pkg Type	-40 to 85	SN74HC138N
SN74HC138N.A	Active	Production	PDIP (N) | 16	25 | TUBE	Yes	NIPDAU	N/A for Pkg Type	-40 to 85	SN74HC138N
SN74HC138NE4	Active	Production	PDIP (N) | 16	25 | TUBE	Yes	NIPDAU	N/A for Pkg Type	-40 to 85	SN74HC138N
SN74HC138NSR	Active	Production	SOP (NS) | 16	2000 | LARGE T&R	Yes	NIPDAU	Level-1-260C-UNLIM	-40 to 85	HC138
SN74HC138NSR.A	Active	Production	SOP (NS) | 16	2000 | LARGE T&R	Yes	NIPDAU	Level-1-260C-UNLIM	-40 to 85	HC138
SN74HC138PW	Obsolete	Production	TSSOP (PW) | 16	-	-	Call TI	Call TI	-40 to 85	HC138
SN74HC138PWR	Active	Production	TSSOP (PW) | 16	2000 | LARGE T&R	Yes	NIPDAU | SN	Level-1-260C-UNLIM	-40 to 85	HC138
SN74HC138PWR.A	Active	Production	TSSOP (PW) | 16	2000 | LARGE T&R	Yes	NIPDAU	Level-1-260C-UNLIM	-40 to 85	HC138
SN74HC138PWRG4	Active	Production	TSSOP (PW) | 16	2000 | LARGE T&R	Yes	NIPDAU	Level-1-260C-UNLIM	-40 to 85	HC138
SN74HC138PWRG4.A	Active	Production	TSSOP (PW) | 16	2000 | LARGE T&R	Yes	NIPDAU	Level-1-260C-UNLIM	-40 to 85	HC138
SN74HC138PWT	Obsolete	Production	TSSOP (PW) | 16	-	-	Call TI	Call TI	-40 to 85	HC138
SNJ54HC138FK	Active	Production	LCCC (FK) | 20	55 | TUBE	No	SNPB	N/A for Pkg Type	-55 to 125	84062012A SNJ54HC 138FK
SNJ54HC138FK.A	Active	Production	LCCC (FK) | 20	55 | TUBE	No	SNPB	N/A for Pkg Type	-55 to 125	84062012A SNJ54HC 138FK
SNJ54HC138J	Active	Production	CDIP (J) | 16	25 | TUBE	No	SNPB	N/A for Pkg Type	-55 to 125	8406201EA SNJ54HC138J
SNJ54HC138J.A	Active	Production	CDIP (J) | 16	25 | TUBE	No	SNPB	N/A for Pkg Type	-55 to 125	8406201EA SNJ54HC138J
SNJ54HC138W	Active	Production	CFP (W) | 16	25 | TUBE	No	SNPB	N/A for Pkg Type	-55 to 125	8406201FA SNJ54HC138W
SNJ54HC138W.A	Active	Production	CFP (W) | 16	25 | TUBE	No	SNPB	N/A for Pkg Type	-55 to 125	8406201FA SNJ54HC138W

(1) **Status:** For more details on status, see our product life cycle.

(2) **Material type:** When designated, preproduction parts are prototypes/experimental devices, and are not yet approved or released for full production. Testing and final process, including without limitation quality assurance, reliability performance testing, and/or process qualification, may not yet be complete, and this item is subject to further changes or possible discontinuation. If available for ordering, purchases will be subject to an additional waiver at checkout, and are intended for early internal evaluation purposes only. These items are sold without warranties of any kind.

(3) **RoHS values:** Yes, No, RoHS Exempt. See the TI RoHS Statement for additional information and value definition.

(4) **Lead finish/Ball material:** Parts may have multiple material finish options. Finish options are separated by a vertical ruled line. Lead finish/Ball material values may wrap to two lines if the finish value exceeds the maximum column width.

(5) **MSL rating/Peak reflow:** The moisture sensitivity level ratings and peak solder (reflow) temperatures. In the event that a part has multiple moisture sensitivity ratings, only the lowest level per JEDEC standards is shown. Refer to the shipping label for the actual reflow temperature that will be used to mount the part to the printed circuit board.

(6) **Part marking:** There may be an additional marking, which relates to the logo, the lot trace code information, or the environmental category of the part.

Multiple part markings will be inside parentheses. Only one part marking contained in parentheses and separated by a "~" will appear on a part. If a line is indented then it is a continuation of the previous line and the two combined represent the entire part marking for that device.

Important Information and Disclaimer: The information provided on this page represents TI's knowledge and belief as of the date that it is provided. TI bases its knowledge and belief on information provided by third parties, and makes no representation or warranty as to the accuracy of such information. Efforts are underway to better integrate information from third parties. TI has taken and continues to take reasonable steps to provide representative and accurate information but may not have conducted destructive testing or chemical analysis on incoming materials and chemicals. TI and TI suppliers consider certain information to be proprietary, and thus CAS numbers and other limited information may not be available for release.

In no event shall TI's liability arising out of such information exceed the total purchase price of the TI part(s) at issue in this document sold by TI to Customer on an annual basis.

OTHER QUALIFIED VERSIONS OF SN54HC138, SN54HC138-SP, SN74HC138 :

- Catalog : SN74HC138, SN54HC138
- Automotive : SN74HC138-Q1, SN74HC138-Q1
- Military : SN54HC138
- Space : SN54HC138-SP

NOTE: Qualified Version Definitions:

- Catalog - TI's standard catalog product
- Automotive - Q100 devices qualified for high-reliability automotive applications targeting zero defects
- Military - QML certified for Military and Defense Applications
- Space - Radiation tolerant, ceramic packaging and qualified for use in Space-based application

TAPE AND REEL INFORMATION

REEL DIMENSIONS

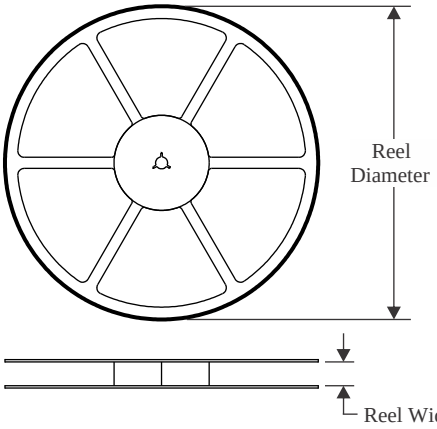

TAPE DIMENSIONS

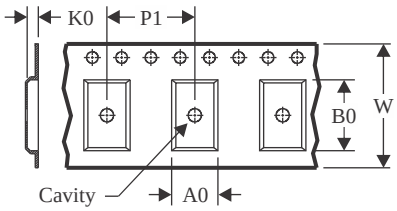

A0	Dimension designed to accommodate the component width
B0	Dimension designed to accommodate the component length
K0	Dimension designed to accommodate the component thickness
W	Overall width of the carrier tape
P1	Pitch between successive cavity centers

QUADRANT ASSIGNMENTS FOR PIN 1 ORIENTATION IN TAPE

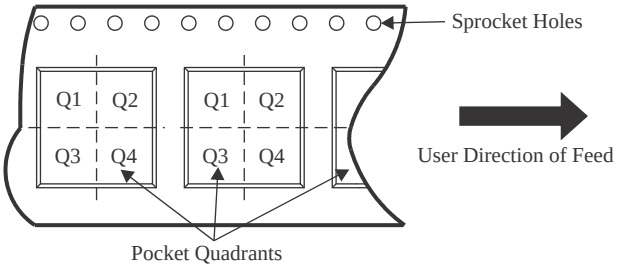

*All dimensions are nominal

Device	Package Type	Package Drawing	Pins	SPQ	Reel Diameter (mm)	Reel Width W1 (mm)	A0 (mm)	B0 (mm)	K0 (mm)	P1 (mm)	W (mm)	Pin1 Quadrant
SN74HC138DBR	SSOP	DB	16	2000	330.0	16.4	8.35	6.6	2.4	12.0	16.0	Q1
SN74HC138DR	SOIC	D	16	2500	330.0	16.4	6.5	10.3	2.1	8.0	16.0	Q1
SN74HC138DR	SOIC	D	16	2500	330.0	16.4	6.5	10.3	2.1	8.0	16.0	Q1
SN74HC138DRG4	SOIC	D	16	2500	330.0	16.4	6.5	10.3	2.1	8.0	16.0	Q1
SN74HC138NSR	SOP	NS	16	2000	330.0	16.4	8.45	10.55	2.5	12.0	16.2	Q1
SN74HC138PWR	TSSOP	PW	16	2000	330.0	12.4	6.9	5.6	1.6	8.0	12.0	Q1
SN74HC138PWR	TSSOP	PW	16	2000	330.0	12.4	6.9	5.6	1.6	8.0	12.0	Q1
SN74HC138PWRG4	TSSOP	PW	16	2000	330.0	12.4	6.9	5.6	1.6	8.0	12.0	Q1

TAPE AND REEL BOX DIMENSIONS

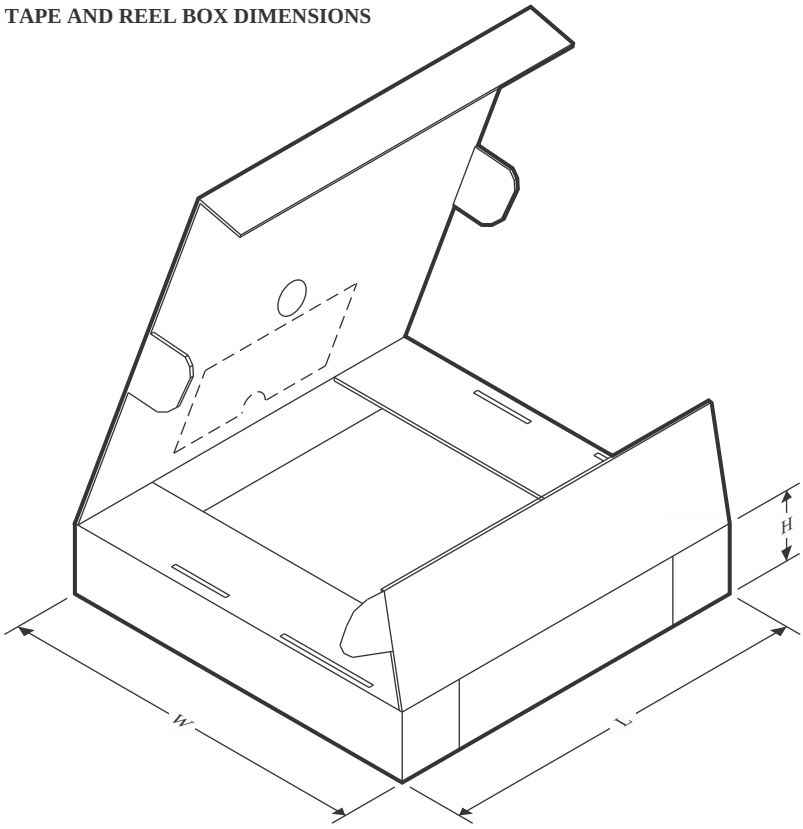

*All dimensions are nominal

Device	Package Type	Package Drawing	Pins	SPQ	Length (mm)	Width (mm)	Height (mm)
SN74HC138DBR	SSOP	DB	16	2000	353.0	353.0	32.0
SN74HC138DR	SOIC	D	16	2500	340.5	336.1	32.0
SN74HC138DR	SOIC	D	16	2500	340.5	336.1	32.0
SN74HC138DRG4	SOIC	D	16	2500	340.5	336.1	32.0
SN74HC138NSR	SOP	NS	16	2000	353.0	353.0	32.0
SN74HC138PWR	TSSOP	PW	16	2000	356.0	356.0	35.0
SN74HC138PWR	TSSOP	PW	16	2000	353.0	353.0	32.0
SN74HC138PWRG4	TSSOP	PW	16	2000	353.0	353.0	32.0

TUBE

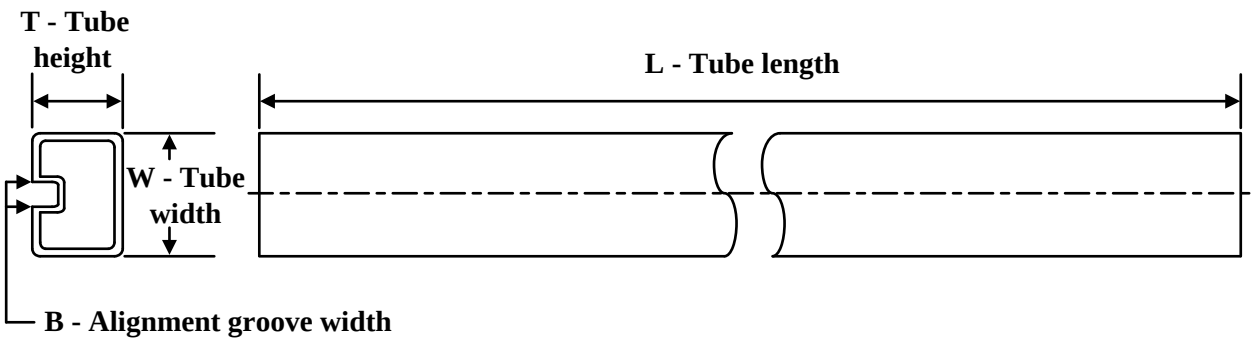

*All dimensions are nominal

Device	Package Name	Package Type	Pins	SPQ	L (mm)	W (mm)	T (µm)	B (mm)
5962-8406201VFA	W	CFP	16	25	506.98	26.16	6220	NA
5962-8406201VFA.A	W	CFP	16	25	506.98	26.16	6220	NA
84062012A	FK	LCCC	20	55	506.98	12.06	2030	NA
8406201FA	W	CFP	16	25	506.98	26.16	6220	NA
JM38510/65802B2A	FK	LCCC	20	55	506.98	12.06	2030	NA
JM38510/65802B2A.A	FK	LCCC	20	55	506.98	12.06	2030	NA
M38510/65802B2A	FK	LCCC	20	55	506.98	12.06	2030	NA
SN74HC138N	N	PDIP	16	25	506	13.97	11230	4.32
SN74HC138N	N	PDIP	16	25	506	13.97	11230	4.32
SN74HC138N.A	N	PDIP	16	25	506	13.97	11230	4.32
SN74HC138N.A	N	PDIP	16	25	506	13.97	11230	4.32
SN74HC138NE4	N	PDIP	16	25	506	13.97	11230	4.32
SN74HC138NE4	N	PDIP	16	25	506	13.97	11230	4.32
SNJ54HC138FK	FK	LCCC	20	55	506.98	12.06	2030	NA
SNJ54HC138FK.A	FK	LCCC	20	55	506.98	12.06	2030	NA
SNJ54HC138W	W	CFP	16	25	506.98	26.16	6220	NA
SNJ54HC138W.A	W	CFP	16	25	506.98	26.16	6220	NA

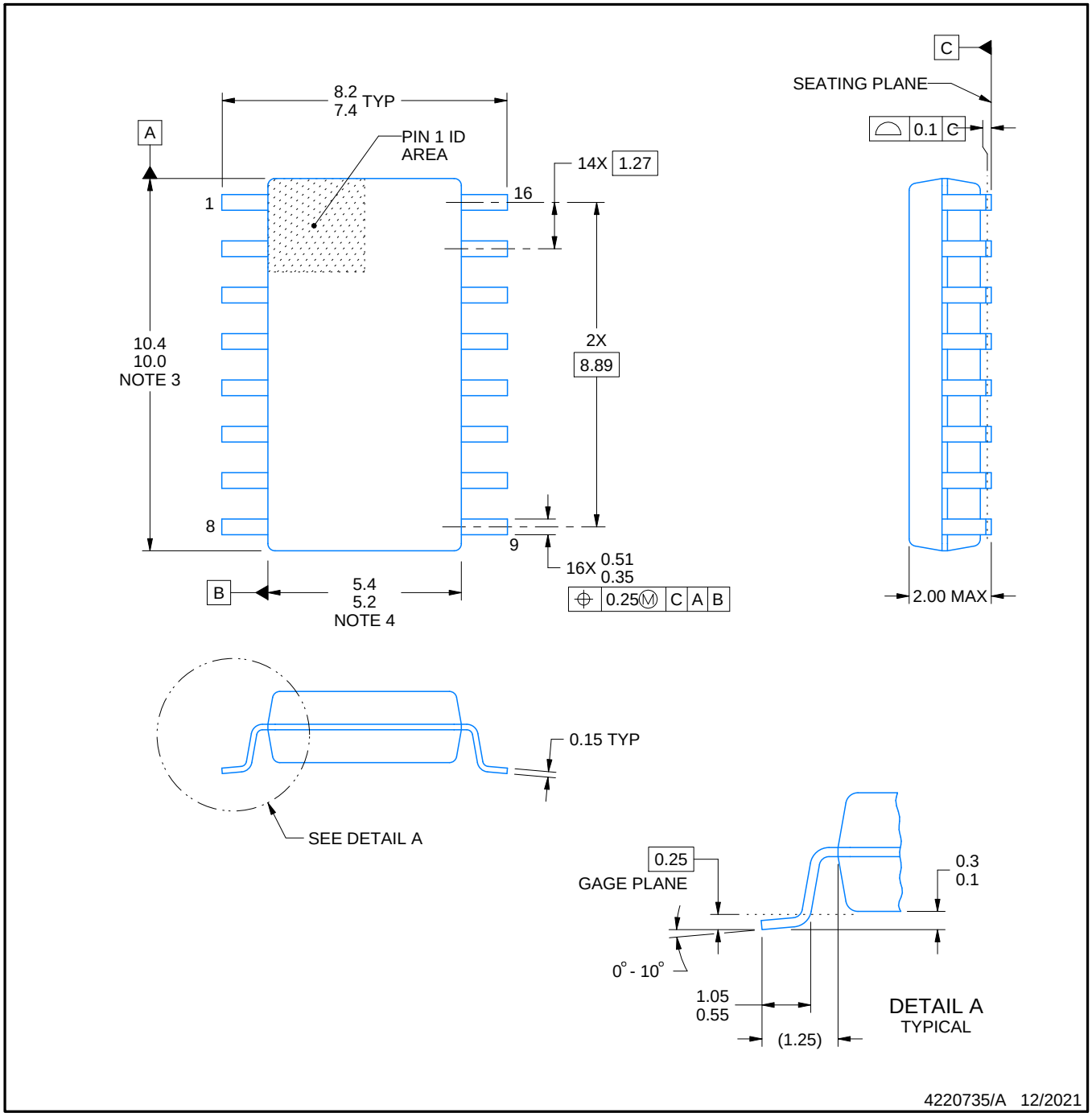

NOTES:

1. All linear dimensions are in millimeters. Dimensions in parenthesis are for reference only. Dimensioning and tolerancing per ASME Y14.5M.
2. This drawing is subject to change without notice.
3. This dimension does not include mold flash, protrusions, or gate burrs. Mold flash, protrusions, or gate burrs shall not exceed 0.15 mm, per side.
4. This dimension does not include interlead flash. Interlead flash shall not exceed 0.25 mm, per side.

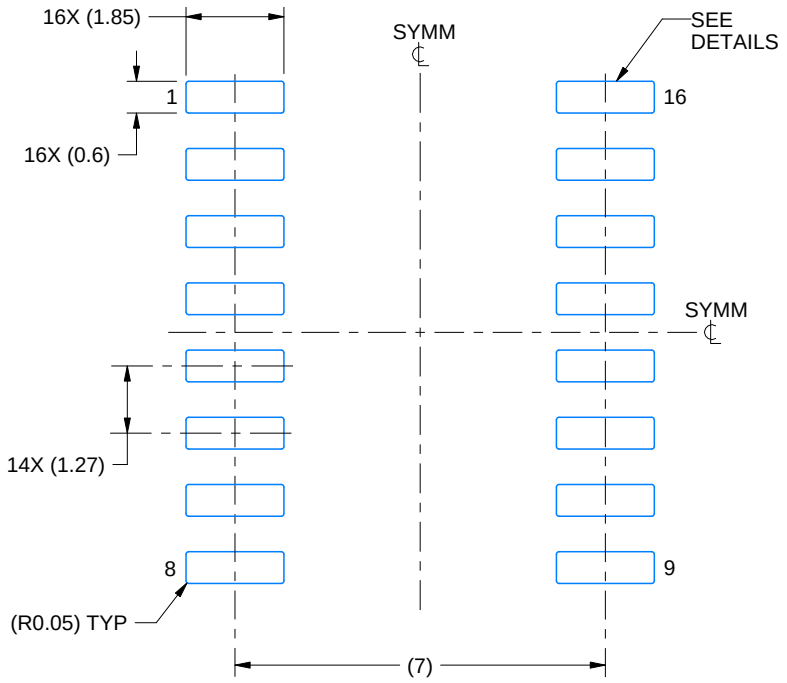

LAND PATTERN EXAMPLE
SCALE:7X

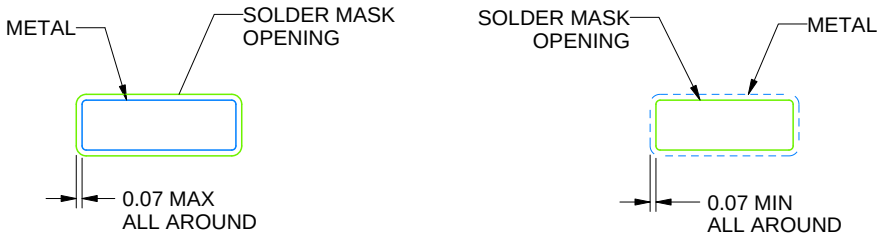

NON SOLDER MASK DEFINED

SOLDER MASK DEFINED

SOLDER MASK DETAILS

4220735/A 12/2021

NOTES: (continued)

5. Publication IPC-7351 may have alternate designs.
6. Solder mask tolerances between and around signal pads can vary based on board fabrication site.

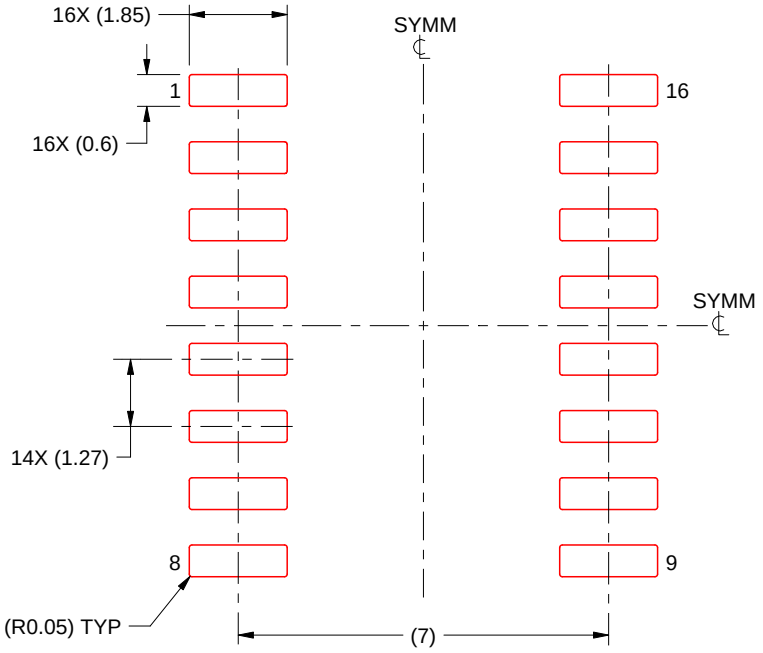

SOLDER PASTE EXAMPLE
BASED ON 0.125 mm THICK STENCIL
SCALE:7X

4220735/A 12/2021

NOTES: (continued)

7. Laser cutting apertures with trapezoidal walls and rounded corners may offer better paste release. IPC-7525 may have alternate design recommendations.
8. Board assembly site may have different recommendations for stencil design.

D (R–PDSO–G16) PLASTIC SMALL OUTLINE

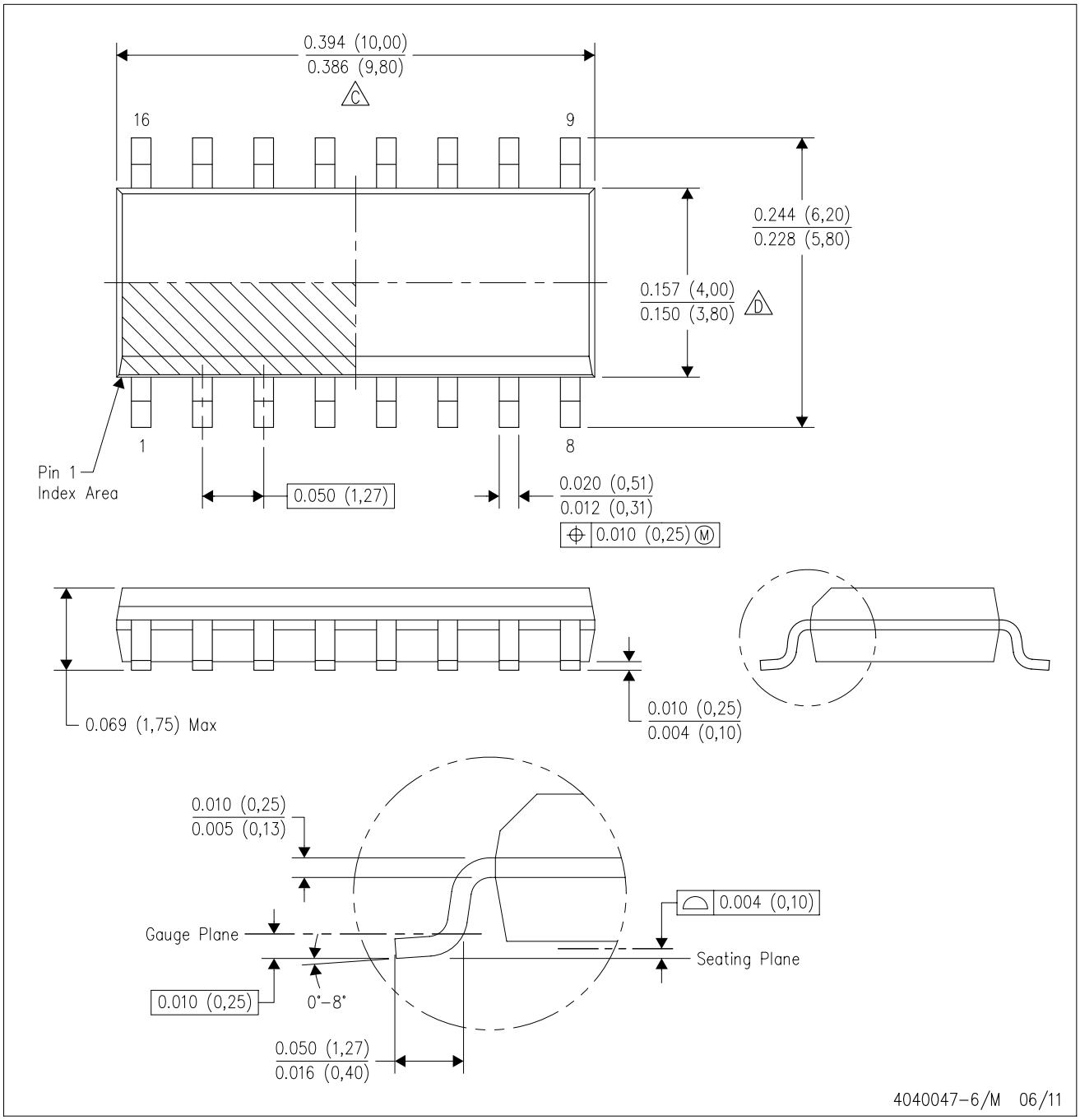

NOTES:
A. All linear dimensions are in inches (millimeters).
B. This drawing is subject to change without notice.
C. Body length does not include mold flash, protrusions, or gate burrs. Mold flash, protrusions, or gate burrs shall not exceed 0.006 (0,15) each side.
D. Body width does not include interlead flash. Interlead flash shall not exceed 0.017 (0,43) each side.
E. Reference JEDEC MS–012 variation AC.

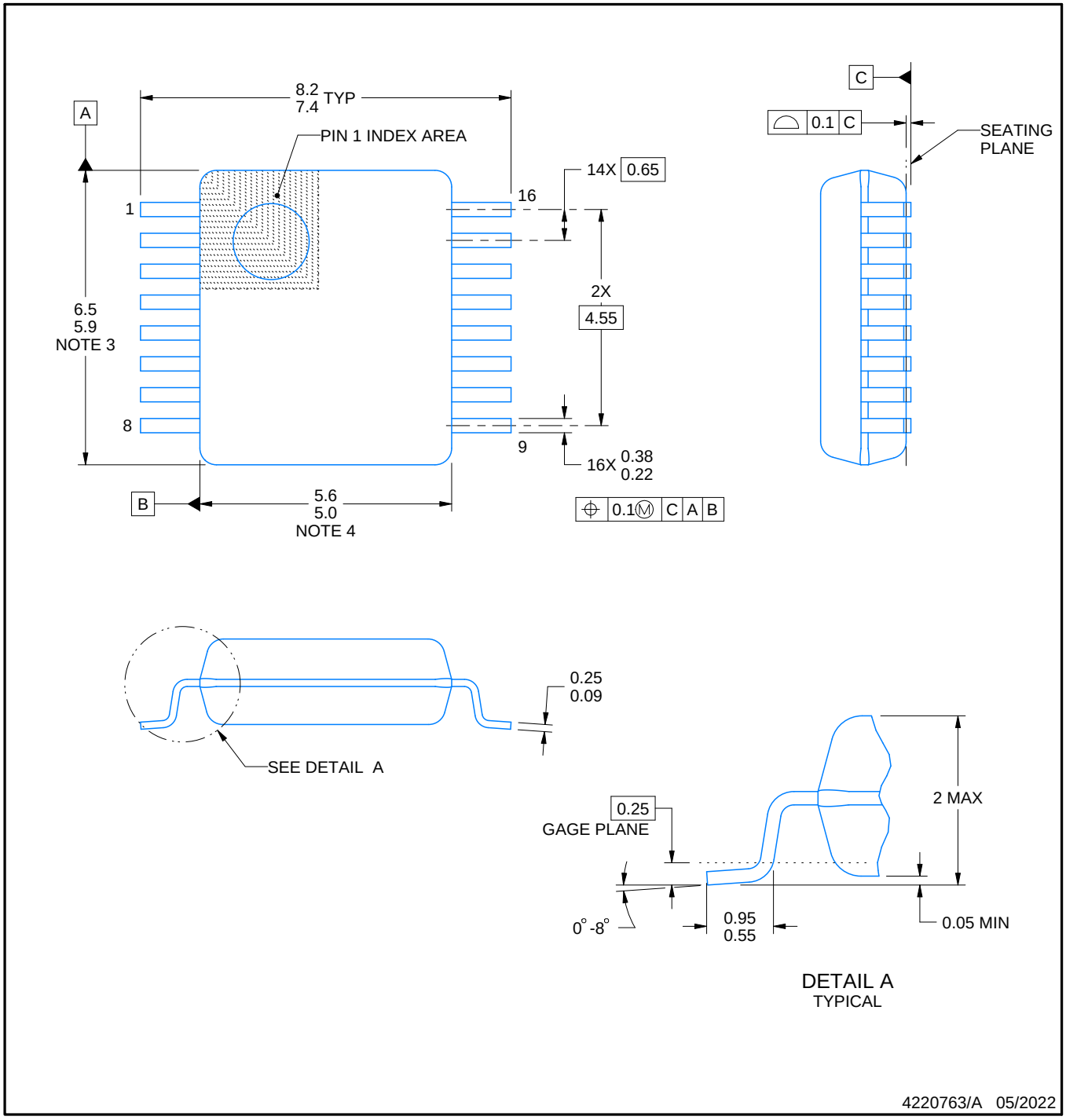

NOTES:

1. All linear dimensions are in millimeters. Any dimensions in parenthesis are for reference only. Dimensioning and tolerancing per ASME Y14.5M.
2. This drawing is subject to change without notice.
3. This dimension does not include mold flash, protrusions, or gate burrs. Mold flash, protrusions, or gate burrs shall not exceed 0.15 mm per side.
4. Reference JEDEC registration MO-150.

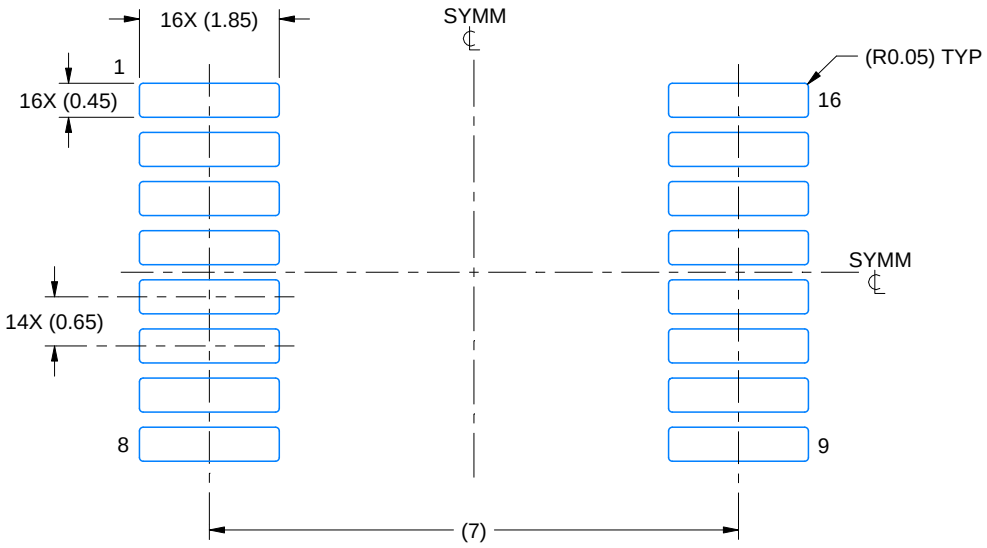

LAND PATTERN EXAMPLE
EXPOSED METAL SHOWN
SCALE: 10X

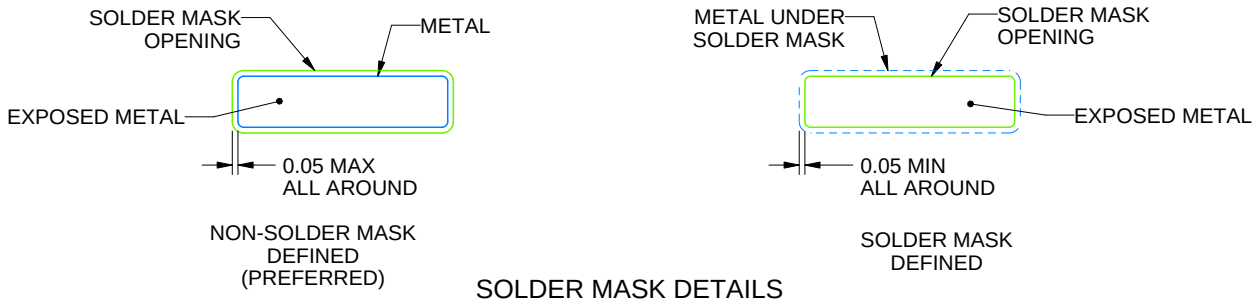

SOLDER MASK DETAILS

4220763/A 05/2022

NOTES: (continued)

5. Publication IPC-7351 may have alternate designs.
6. Solder mask tolerances between and around signal pads can vary based on board fabrication site.

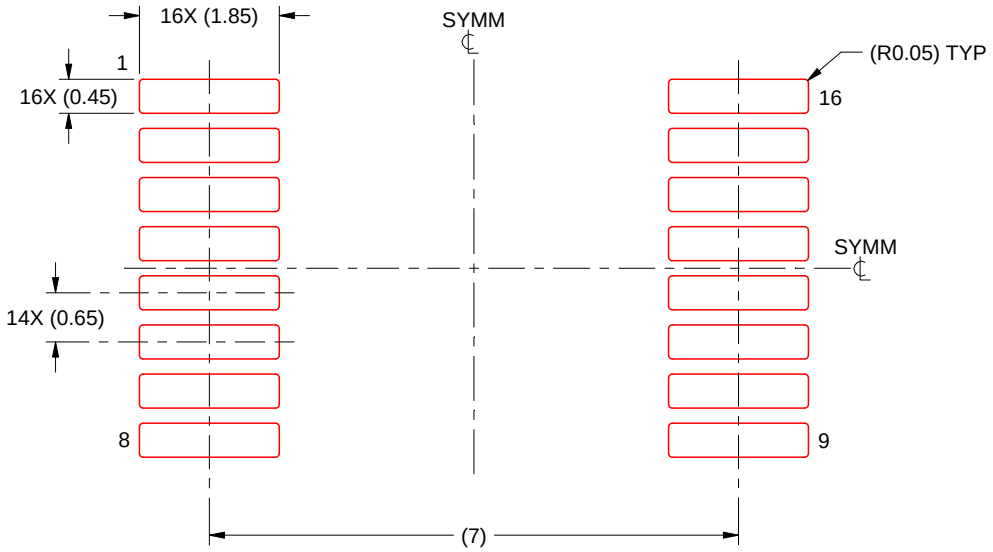

SOLDER PASTE EXAMPLE
BASED ON 0.125 mm THICK STENCIL
SCALE: 10X

4220763/A 05/2022

NOTES: (continued)

7. Laser cutting apertures with trapezoidal walls and rounded corners may offer better paste release. IPC-7525 may have alternate design recommendations.
8. Board assembly site may have different recommendations for stencil design.

W (R–GDFP–F16) CERAMIC DUAL FLATPACK

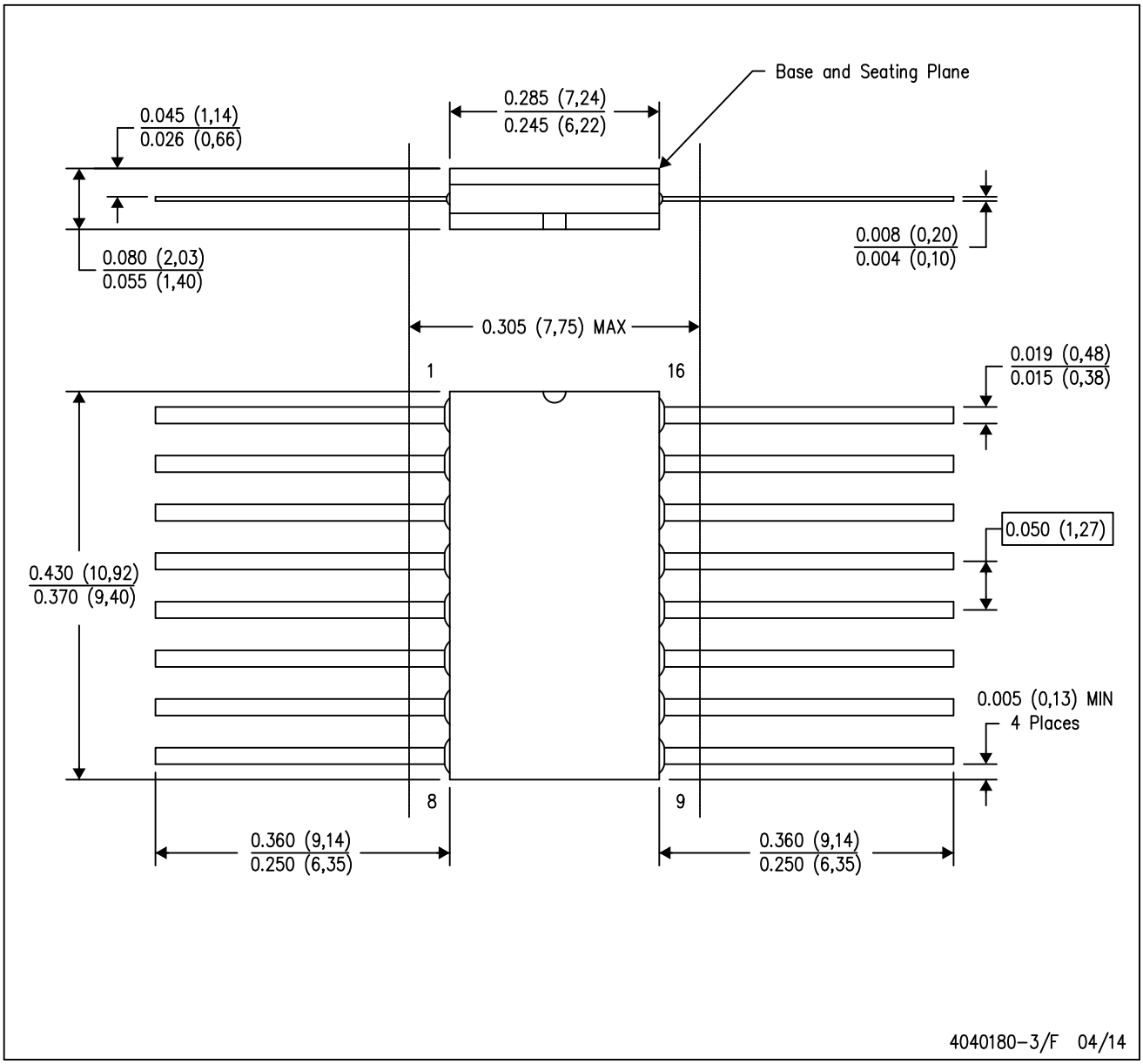

NOTES:
A. All linear dimensions are in inches (millimeters).
B. This drawing is subject to change without notice.
C. This package can be hermetically sealed with a ceramic lid using glass frit.
D. Index point is provided on cap for terminal identification only.
E. Falls within MIL STD 1835 GDFP2–F16

GENERIC PACKAGE VIEW

FK 20

LCCC - 2.03 mm max height

8.89 x 8.89, 1.27 mm pitch

LEADLESS CERAMIC CHIP CARRIER

This image is a representation of the package family, actual package may vary.
Refer to the product data sheet for package details.

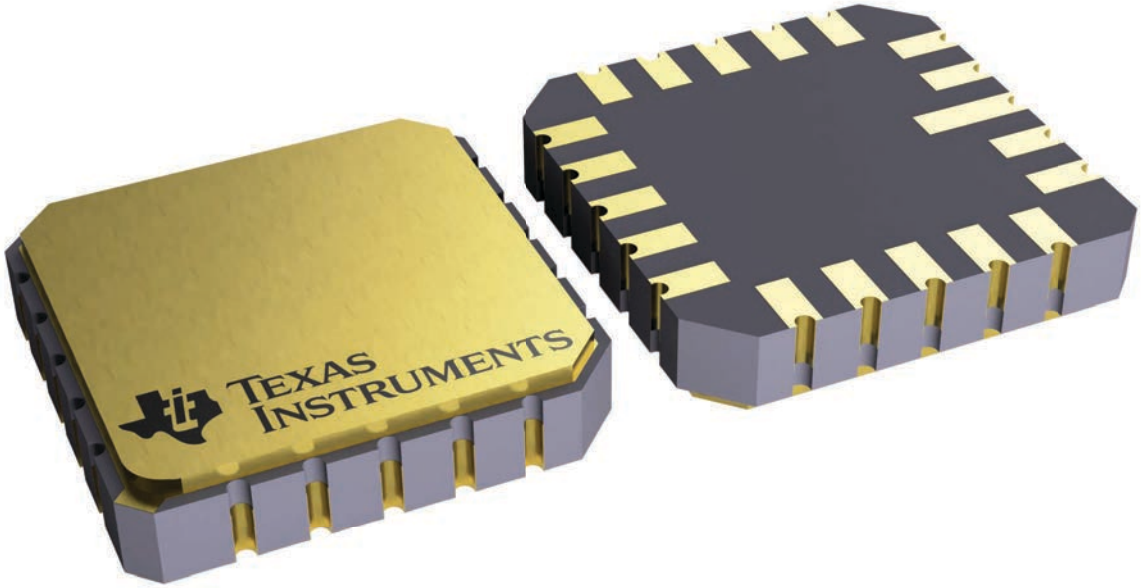

4229370VA\

J (R–GDIP–T**) CERAMIC DUAL IN–LINE PACKAGE

14 LEADS SHOWN

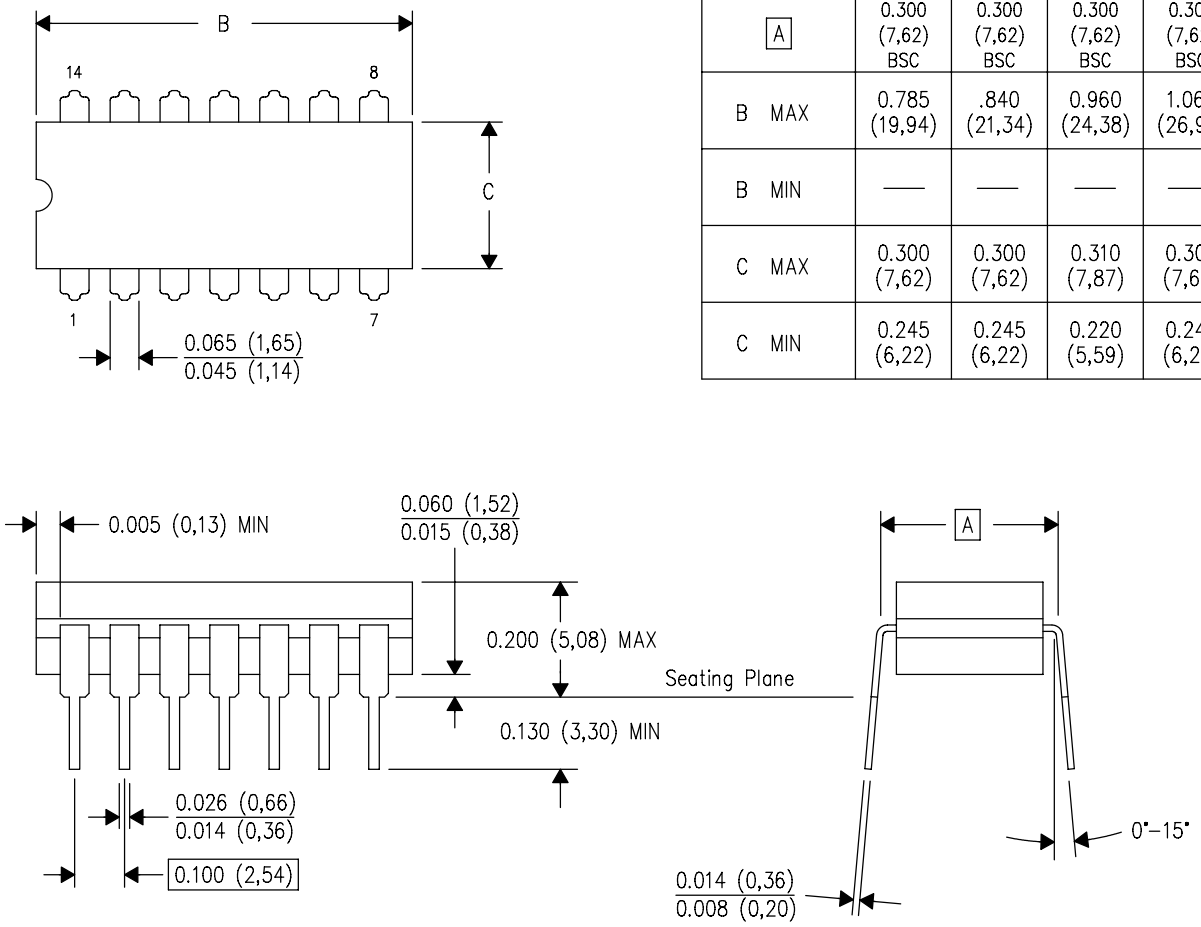

DIM \ PINS **	14	16	18	20
A	0.300 (7,62) BSC	0.300 (7,62) BSC	0.300 (7,62) BSC	0.300 (7,62) BSC
B MAX	0.785 (19,94)	.840 (21,34)	0.960 (24,38)	1.060 (26,92)
B MIN	—	—	—	—
C MAX	0.300 (7,62)	0.300 (7,62)	0.310 (7,87)	0.300 (7,62)
C MIN	0.245 (6,22)	0.245 (6,22)	0.220 (5,59)	0.245 (6,22)

4040083/F 03/03

NOTES:
- A. All linear dimensions are in inches (millimeters).
- B. This drawing is subject to change without notice.
- C. This package is hermetically sealed with a ceramic lid using glass frit.
- D. Index point is provided on cap for terminal identification only on press ceramic glass frit seal only.
- E. Falls within MIL STD 1835 GDIP1–T14, GDIP1–T16, GDIP1–T18 and GDIP1–T20.

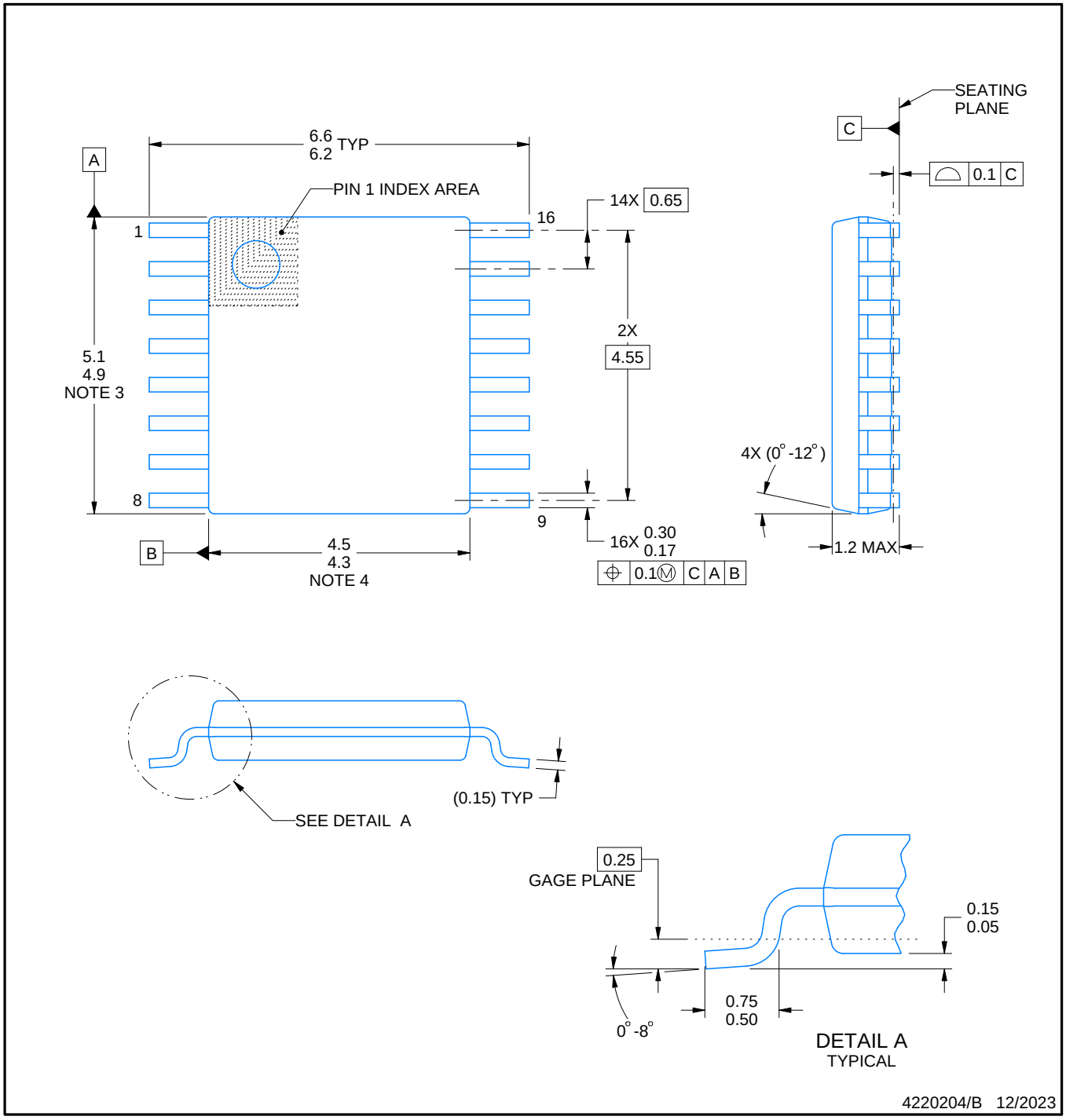

NOTES:

1. All linear dimensions are in millimeters. Any dimensions in parenthesis are for reference only. Dimensioning and tolerancing per ASME Y14.5M.
2. This drawing is subject to change without notice.
3. This dimension does not include mold flash, protrusions, or gate burrs. Mold flash, protrusions, or gate burrs shall not exceed 0.15 mm per side.
4. This dimension does not include interlead flash. Interlead flash shall not exceed 0.25 mm per side.
5. Reference JEDEC registration MO-153.

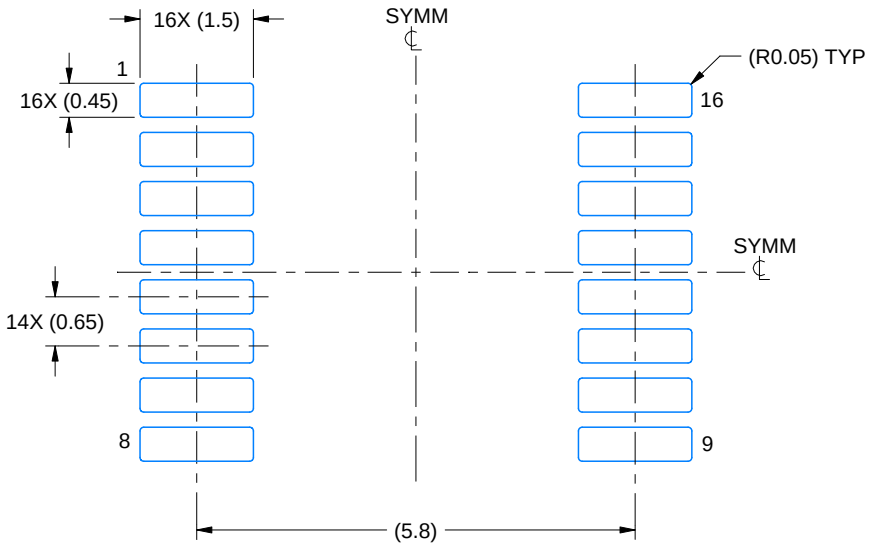

LAND PATTERN EXAMPLE
EXPOSED METAL SHOWN
SCALE: 10X

NON-SOLDER MASK DEFINED (PREFERRED)

SOLDER MASK DEFINED

SOLDER MASK DETAILS

4220204/B 12/2023

NOTES: (continued)

6. Publication IPC-7351 may have alternate designs.
7. Solder mask tolerances between and around signal pads can vary based on board fabrication site.

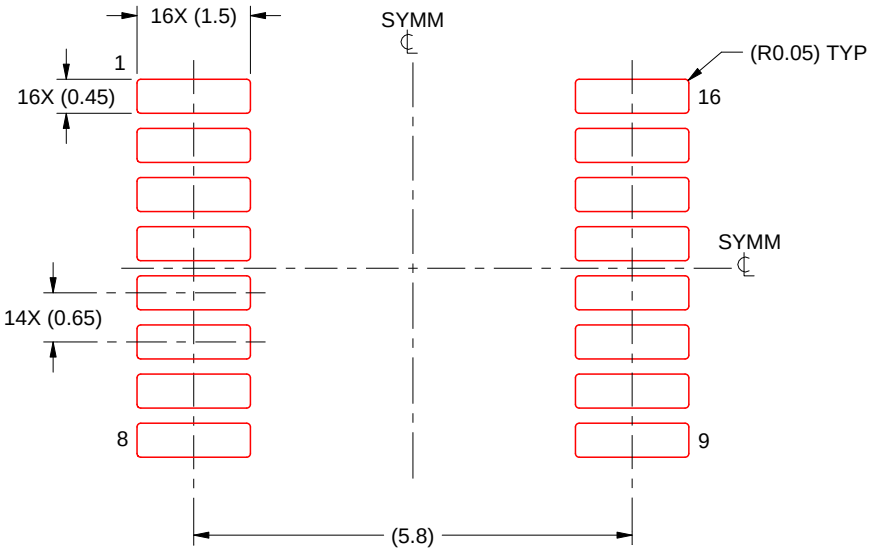

SOLDER PASTE EXAMPLE
BASED ON 0.125 mm THICK STENCIL
SCALE: 10X

4220204/B 12/2023

NOTES: (continued)

8. Laser cutting apertures with trapezoidal walls and rounded corners may offer better paste release. IPC-7525 may have alternate design recommendations.
9. Board assembly site may have different recommendations for stencil design.

N (R–PDIP–T**) PLASTIC DUAL–IN–LINE PACKAGE

16 PINS SHOWN

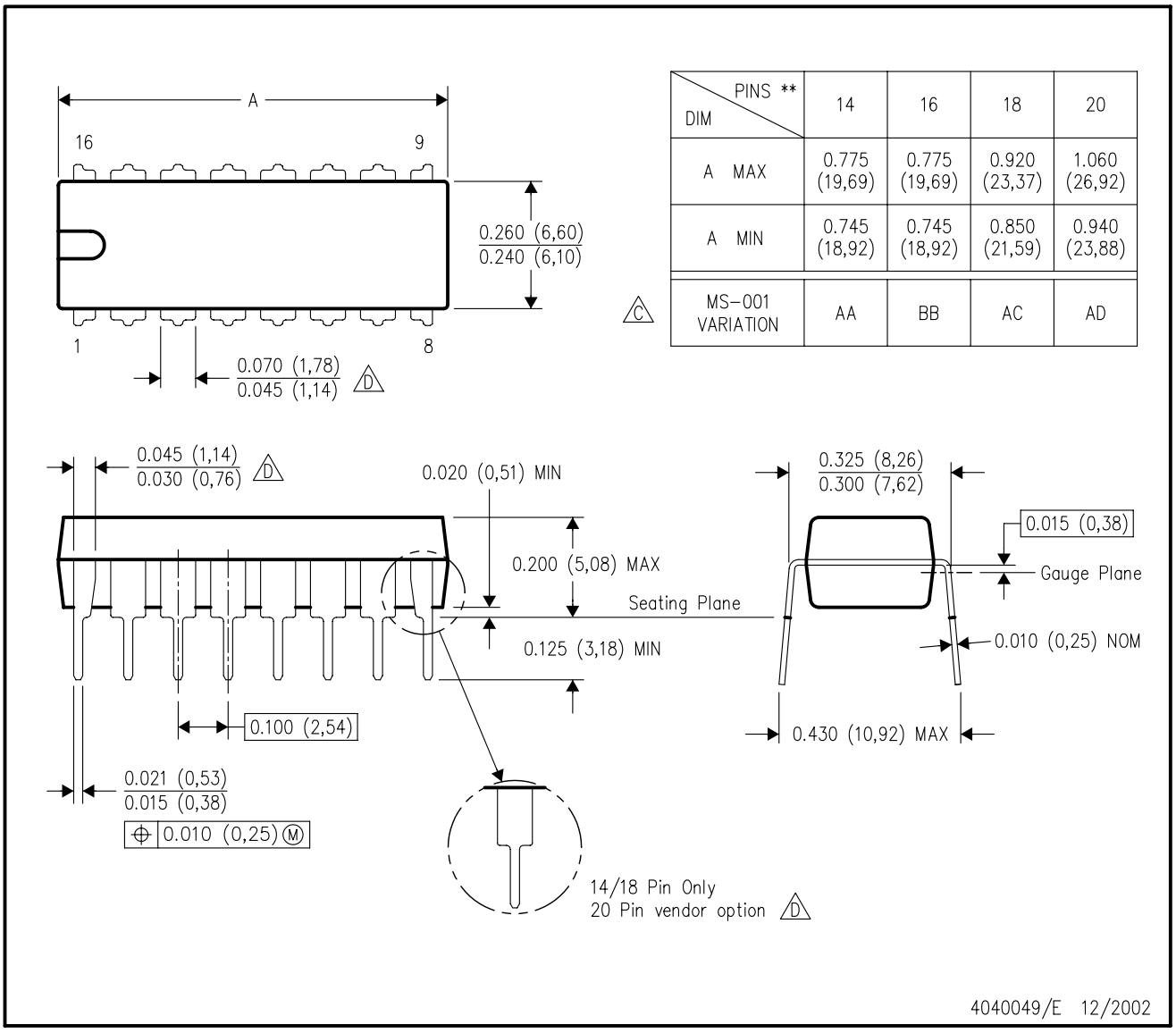

DIM \ PINS **	14	16	18	20
A MAX	0.775 (19,69)	0.775 (19,69)	0.920 (23,37)	1.060 (26,92)
A MIN	0.745 (18,92)	0.745 (18,92)	0.850 (21,59)	0.940 (23,88)
MS–001 VARIATION (C)	AA	BB	AC	AD

NOTES:
A. All linear dimensions are in inches (millimeters).
B. This drawing is subject to change without notice.
C. Falls within JEDEC MS–001, except 18 and 20 pin minimum body length (Dim A).
D. The 20 pin end lead shoulder width is a vendor option, either half or full width.

IMPORTANT NOTICE AND DISCLAIMER

TI PROVIDES TECHNICAL AND RELIABILITY DATA (INCLUDING DATASHEETS), DESIGN RESOURCES (INCLUDING REFERENCE DESIGNS), APPLICATION OR OTHER DESIGN ADVICE, WEB TOOLS, SAFETY INFORMATION, AND OTHER RESOURCES “AS IS” AND WITH ALL FAULTS, AND DISCLAIMS ALL WARRANTIES, EXPRESS AND IMPLIED, INCLUDING WITHOUT LIMITATION ANY IMPLIED WARRANTIES OF MERCHANTABILITY, FITNESS FOR A PARTICULAR PURPOSE OR NON-INFRINGEMENT OF THIRD PARTY INTELLECTUAL PROPERTY RIGHTS.

These resources are intended for skilled developers designing with TI products. You are solely responsible for (1) selecting the appropriate TI products for your application, (2) designing, validating and testing your application, and (3) ensuring your application meets applicable standards, and any other safety, security, regulatory or other requirements.

These resources are subject to change without notice. TI grants you permission to use these resources only for development of an application that uses the TI products described in the resource. Other reproduction and display of these resources is prohibited. No license is granted to any other TI intellectual property right or to any third party intellectual property right. TI disclaims responsibility for, and you fully indemnify TI and its representatives against any claims, damages, costs, losses, and liabilities arising out of your use of these resources.

TI’s products are provided subject to TI’s Terms of Sale, TI’s General Quality Guidelines, or other applicable terms available either on ti.com or provided in conjunction with such TI products. TI’s provision of these resources does not expand or otherwise alter TI’s applicable warranties or warranty disclaimers for TI products. Unless TI explicitly designates a product as custom or customer-specified, TI products are standard, catalog, general purpose devices.

TI objects to and rejects any additional or different terms you may propose.

Copyright © 2026, Texas Instruments Incorporated

Last updated 10/2025