SCT3060AR

N-channel SiC power MOSFET

Datasheet

V_{DSS}	650V
$R_{DS(on)}$ (Typ.)	60mΩ
I_D *1	39A
P_D	165W

●Outline

TO-247-4L



(1) (2)(3)(4)

●Inner circuit

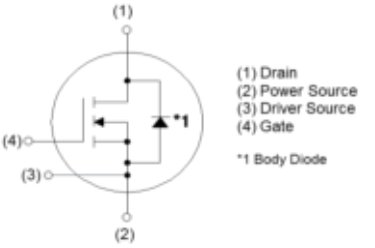

Please note Driver Source and Power Source are not exchangeable. Their exchange might lead to malfunction.

●Features

1) Low on-resistance
2) Fast switching speed
3) Fast reverse recovery
4) Easy to parallel
5) Simple to drive
6) Pb-free lead plating ; RoHS compliant

●Application

- Solar inverters
- DC/DC converters
- Switch mode power supplies
- Induction heating
- Motor drives

●Packaging specifications

Type	Packing	Tube
	Reel size (mm)	-
	Tape width (mm)	-
	Basic ordering unit (pcs)	30
	Taping code	C15
	Marking	SCT3060AR

●Absolute maximum ratings (T_{vj} = 25°C unless otherwise specified)

Parameter		Symbol	Value	Unit
Drain - Source Voltage		V_{DSS}	650	V
Continuous Drain current	T_c = 25°C	I_D *1	39	A
	T_c = 100°C	I_D *1	27	A
Pulsed Drain current (T_c = 25°C)		$I_{D,pulse}$ *2	97	A
Gate - Source voltage (DC)		V_{GSS}	-4 to +22	V
Gate - Source surge voltage (t_{surge} < 300ns)		V_{GSS_surge} *3	-4 to +26	V
Recommended drive voltage		V_{GS_op} *4	0 / +18	V
Virtual Junction temperature		T_{vj}	175	°C
Range of storage temperature		T_{stg}	-55 to +175	°C

©2022 ROHM Co., Ltd. All rights reserved.

●Electrical characteristics (T_{vj} = 25°C unless otherwise specified)

Parameter	Symbol	Conditions	Values			Unit
			Min.	Typ.	Max.	
Drain - Source breakdown voltage	$V_{(BR)DSS}$	V_{GS} = 0V, I_D = 1mA T_{vj} = 25°C T_{vj} = -55°C	 650 650	 - -	 - -	V
Zero Gate voltage Drain current	I_{DSS}	V_{GS} = 0V, V_{DS} =650V T_{vj} = 25°C T_{vj} = 150°C	 - -	 1 2	 10 -	μA
Gate - Source leakage current	I_{GSS+}	V_{GS} = +22V, V_{DS} = 0V	-	-	100	nA
Gate - Source leakage current	I_{GSS-}	V_{GS} = -4V, V_{DS} = 0V	-	-	-100	nA
Gate threshold voltage	$V_{GS\ (th)}$	V_{DS} = 10V, I_D = 6.67mA	2.7	-	5.6	V
Static Drain - Source on - state resistance	$R_{DS(on)}$ *5	V_{GS} = 18V, I_D = 13A T_{vj} = 25°C T_{vj} = 150°C	 - -	 60 86	 78 -	mΩ
Gate input resistance	R_G	f = 1MHz, open drain	-	12	-	Ω

●Thermal resistance

Parameter	Symbol	Values			Unit
		Min.	Typ.	Max.	
Thermal resistance, junction - case	R_{thJC}	-	0.70	0.91	K/W

●Typical Transient Thermal Characteristics

Symbol	Value	Unit
R_{th1}	8.52×10^{-2}	K/W
R_{th2}	4.15×10^{-1}	
R_{th3}	2.06×10^{-1}	

Symbol	Value	Unit
C_{th1}	1.22×10^{-3}	Ws/K
C_{th2}	6.20×10^{-3}	
C_{th3}	3.49×10^{-2}	

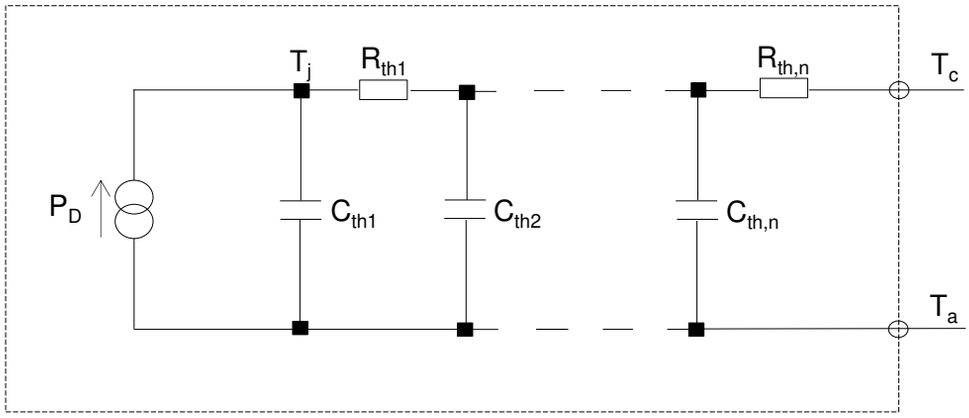

©2022 ROHM Co., Ltd. All rights reserved.

●**Electrical characteristics** (T_{vj} = 25°C unless otherwise specified)

Parameter	Symbol	Conditions	Values			Unit
			Min.	Typ.	Max.	
Transconductance	g_{fs} *5	V_{DS} = 10V, I_D = 13A	-	4.9	-	S
Input capacitance	C_{iss}	V_{GS} = 0V	-	852	-	pF
Output capacitance	C_{oss}	V_{DS} = 500V	-	55	-	
Reverse transfer capacitance	C_{rss}	f = 1MHz	-	24	-	
Effective output capacitance, energy related	$C_{o(er)}$	V_{GS} = 0V V_{DS} = 0V to 300V	-	126	-	pF
Total Gate charge	Q_g *5	V_{DS} = 300V	-	58	-	nC
Gate - Source charge	Q_{gs} *5	I_D = 13A V_{GS} = 18V	-	11	-	
Gate - Drain charge	Q_{gd} *5	See Fig. 1-1.	-	31	-	
Turn - on delay time	$t_{d(on)}$ *5	V_{DS} = 400V	-	5	-	ns
Rise time	t_r *5	I_D = 20A V_{GS} = 0V/+18V	-	15	-	
Turn - off delay time	$t_{d(off)}$ *5	R_G = 0Ω, L = 750μH L_σ = 50nH, C_σ = 10pF	-	16	-	
Fall time	t_f *5	See Fig. 2-1, 2-2, 2-3.	-	14	-	
Turn - on switching loss	E_{on} *5	E_{on} includes diode reverse recovery.	-	88	-	μJ
Turn - off switching loss	E_{off} *5		-	28	-	

©2022 ROHM Co., Ltd. All rights reserved.

●**Body diode electrical characteristics** (Source-Drain) (T_{vj} = 25°C unless otherwise specified)

Parameter	Symbol	Conditions	Values			Unit
			Min.	Typ.	Max.	
Body diode continuous, forward current	I_S *1	T_c = 25°C	-	-	39	A
Body diode direct current, pulsed	I_{SM} *2		-	-	97	A
Forward voltage	V_{SD} *5	V_{GS} = 0V, I_S = 13A	-	3.2	-	V
Reverse recovery time	t_{rr} *5	I_F = 13A V_R = 400V di/dt = 2500A/μs L_σ = 50nH, C_σ = 10pF See Fig. 3-1, 3-2.	-	18	-	ns
Reverse recovery charge	Q_{rr} *5		-	294	-	nC
Peak reverse recovery current	I_{rrm} *5		-	27	-	A

*1 Limited by maximum T_{vj} and for Max. R_{thJC}.

*2 PW ≤ 10μs, Duty cycle ≤ 1%

*3 Example of acceptable V_{GS} waveform

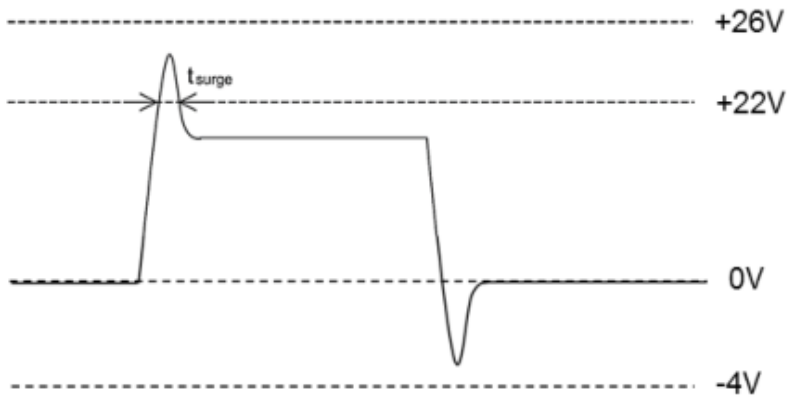

Please note especially when using driver source that V_{GSS_surge} must be in the range of absolute maximum rating.

*4 Please be advised not to use SiC-MOSFETs with V_{GS} below 13V as doing so may cause thermal runaway.

*5 Pulsed

©2022 ROHM Co., Ltd. All rights reserved.

●Electrical characteristic curves

Fig.1 Power Dissipation Derating Curve

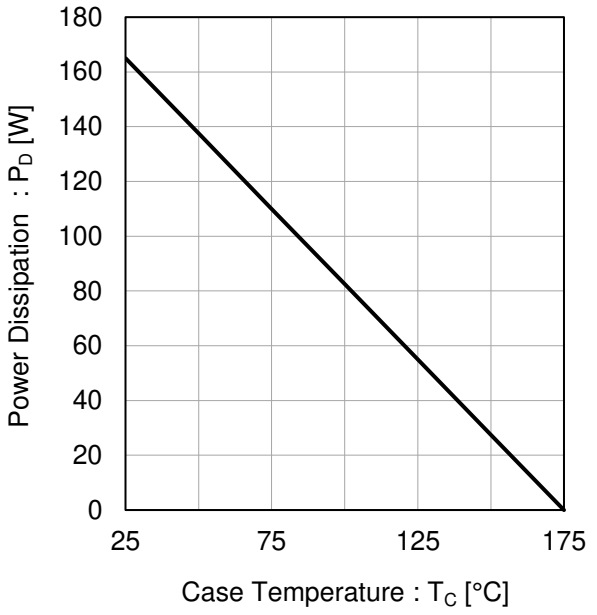

Fig.2 Maximum Safe Operating Area

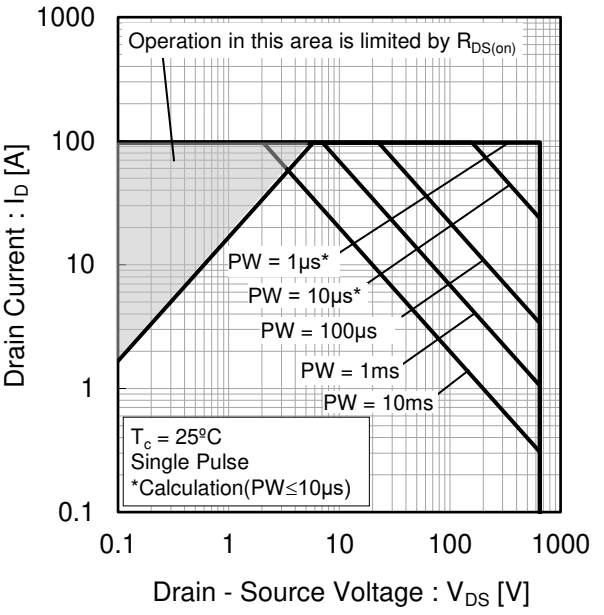

Fig.3 Typical Transient Thermal Impedance vs. Pulse Width

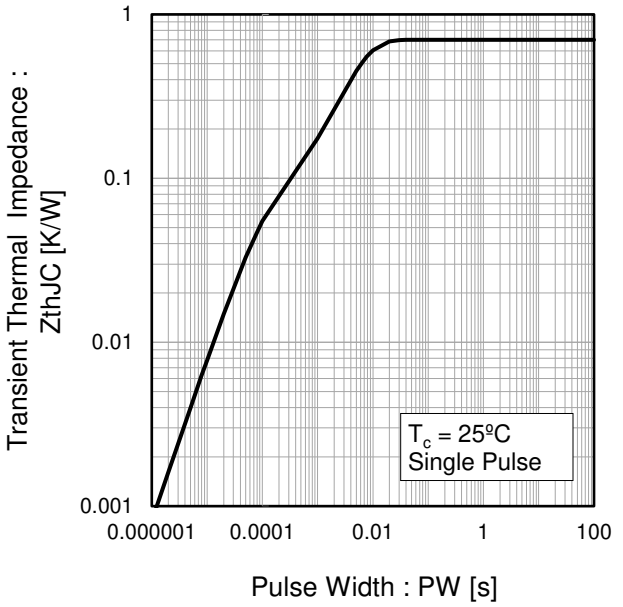

©2022 ROHM Co., Ltd. All rights reserved.

●Electrical characteristic curves

Fig.4 Typical Output Characteristics(I)

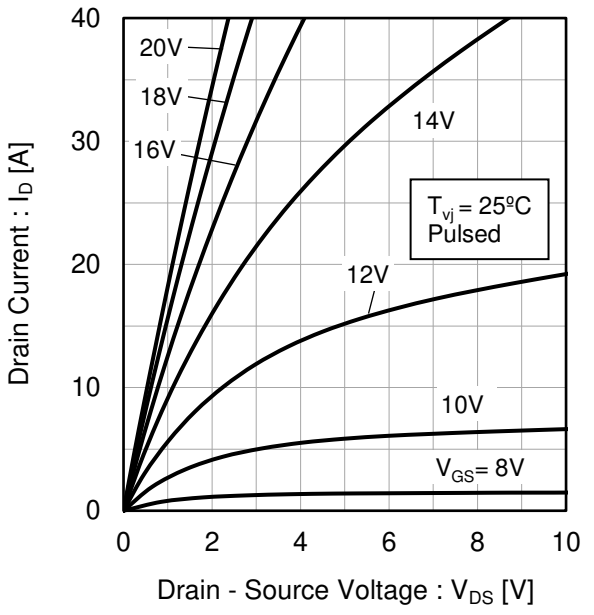

Fig.5 Typical Output Characteristics(II)

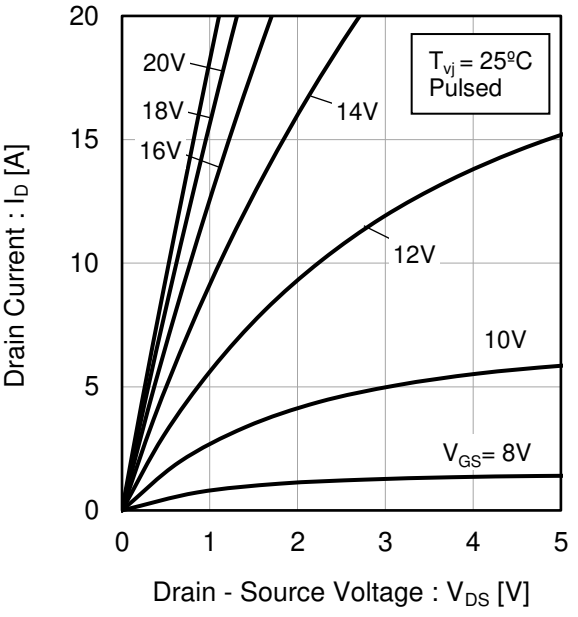

Fig.6 T_{vj} = 25ºC 3rd Quadrant Characteristics

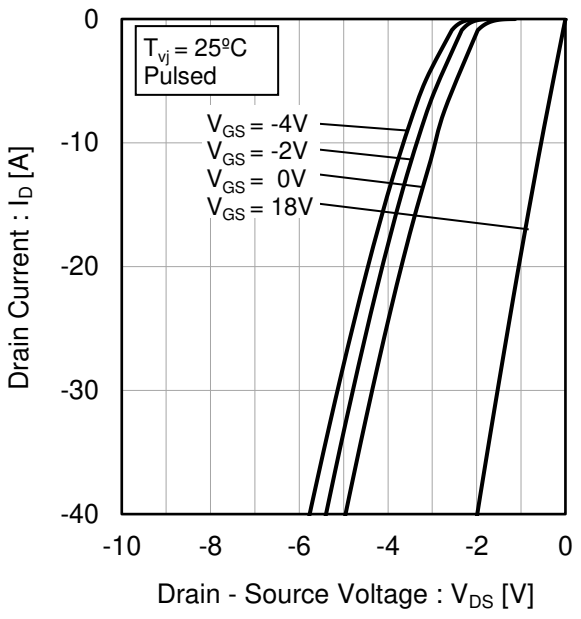

©2022 ROHM Co., Ltd. All rights reserved.

●Electrical characteristic curves

Fig.7 T_{vj} = 150ºC Typical Output Characteristics(I)

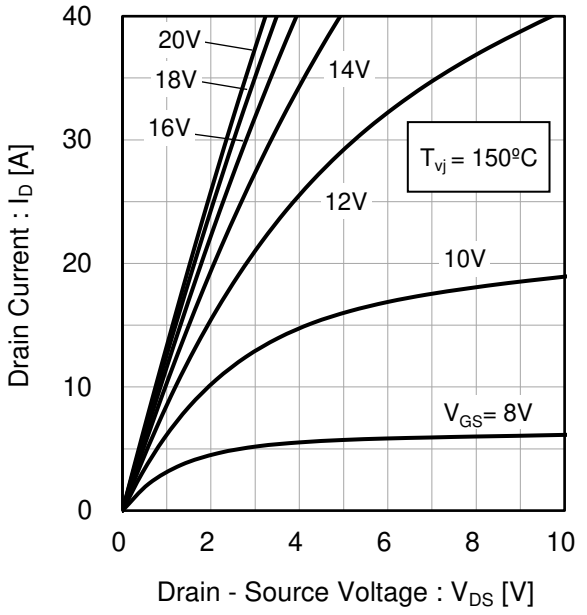

Fig.8 T_{vj} = 150ºC Typical Output Characteristics(II)

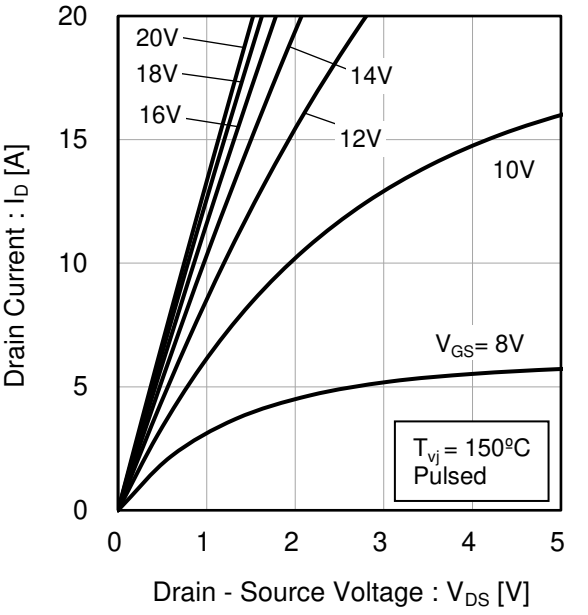

Fig.9 T_{vj} = 150ºC 3rd Quadrant Characteristics

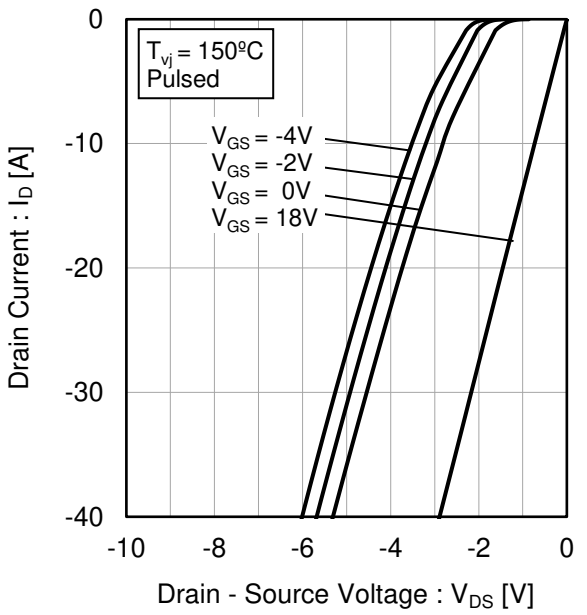

Fig.10 Body Diode Forward Voltage vs. Gate - Source Voltage

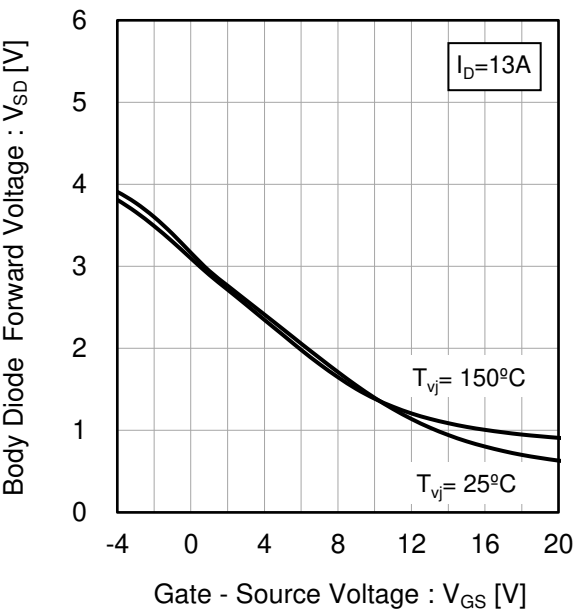

©2022 ROHM Co., Ltd. All rights reserved.

●Electrical characteristic curves

Fig.11 Typical Transfer Characteristics (I)

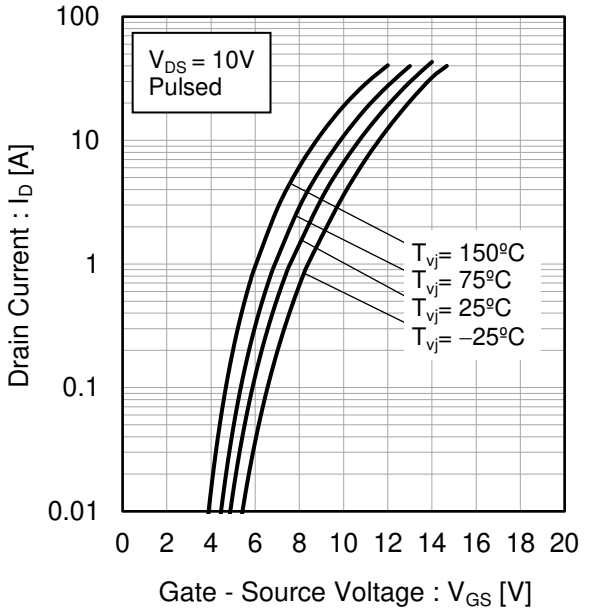

Fig.12 Typical Transfer Characteristics (II)

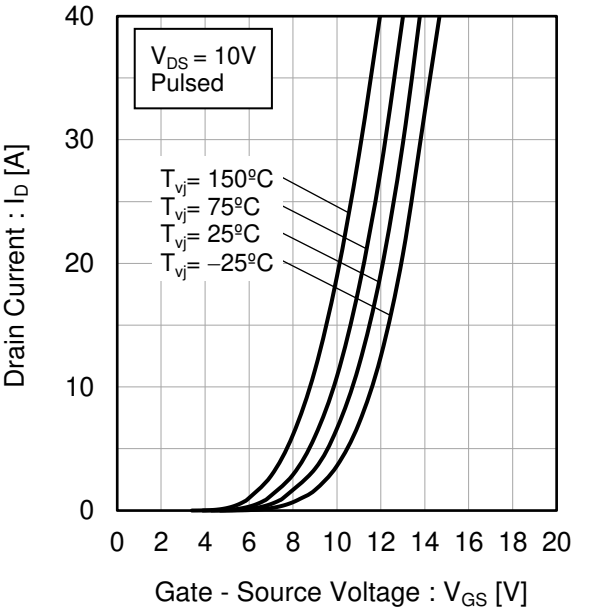

Fig.13 Gate Threshold Voltage vs. Virtual Junction Temperature

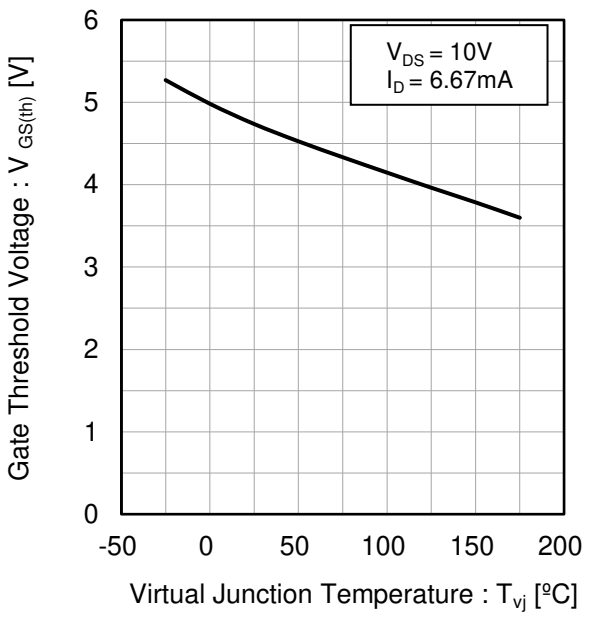

Fig.14 Transconductance vs. Drain Current

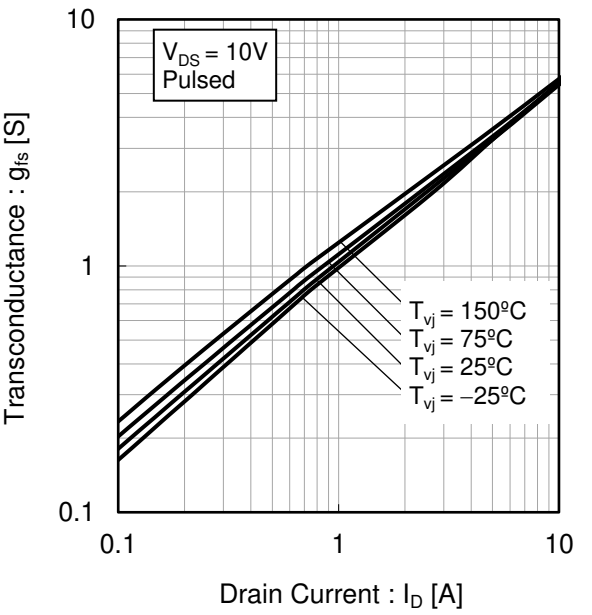

©2022 ROHM Co., Ltd. All rights reserved.

●Electrical characteristic curves

Fig.15 Static Drain - Source On - State Resistance vs. Gate - Source Voltage

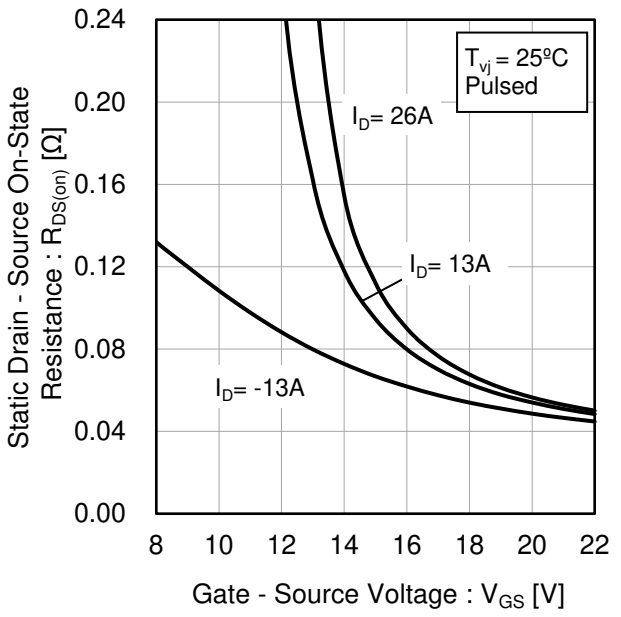

Fig.16 Static Drain - Source On - State Resistance vs. Virtual Junction Temperature

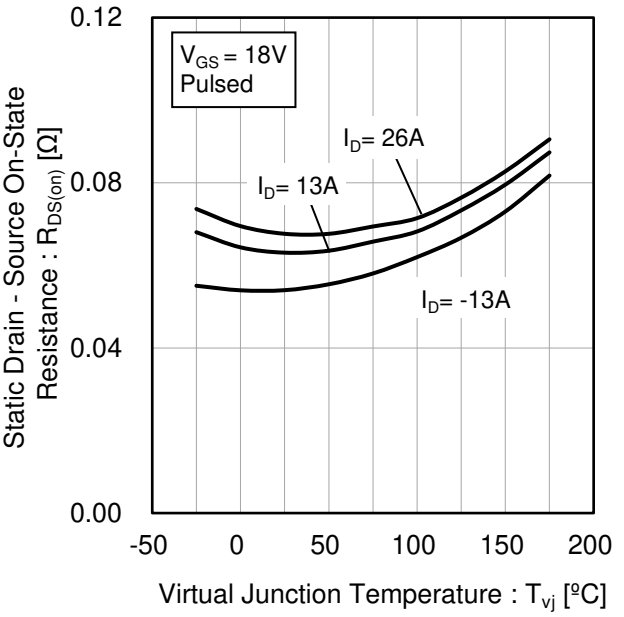

Fig.17 Static Drain - Source On - State Resistance vs. Drain Current

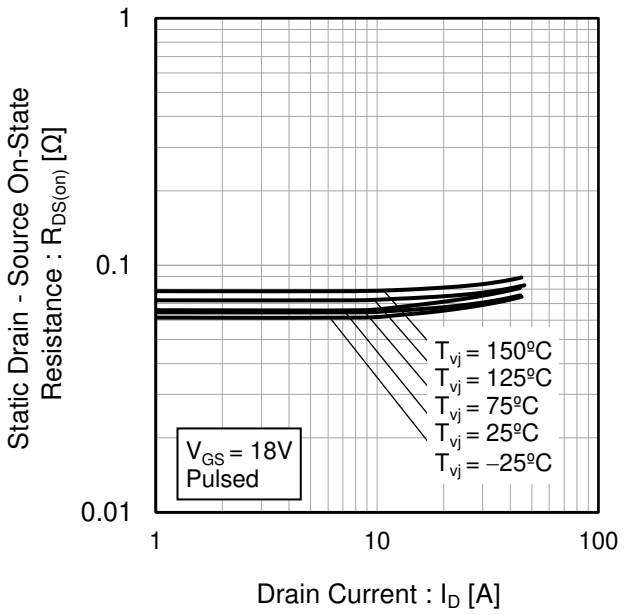

Fig.18 Normalized Drain - Source Breakdown Voltage vs. Virtual Junction Temperature

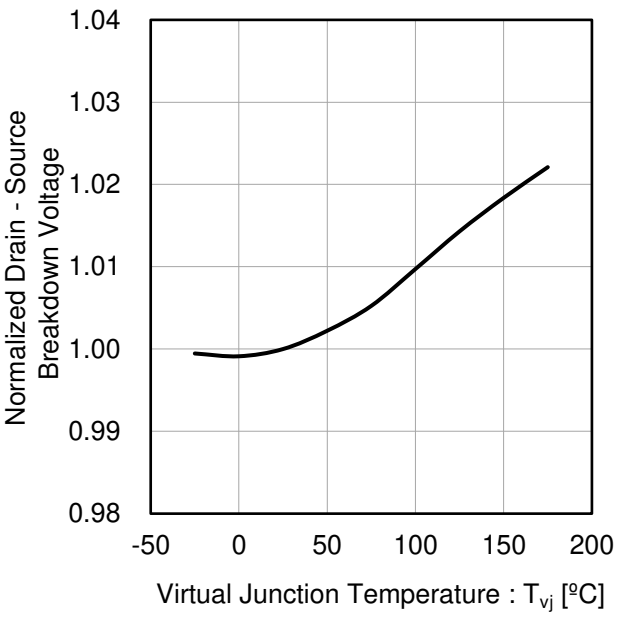

©2022 ROHM Co., Ltd. All rights reserved.

●Electrical characteristic curves

Fig.19 Typical Capacitance vs. Drain - Source Voltage

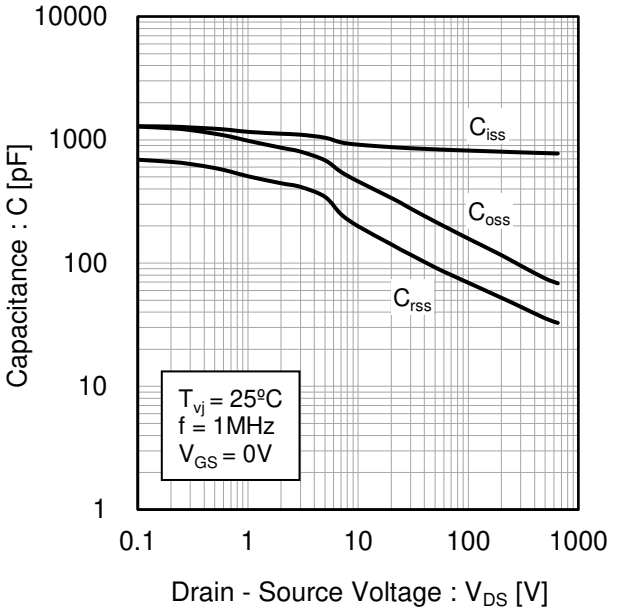

Fig.20 C_{oss} Stored Energy

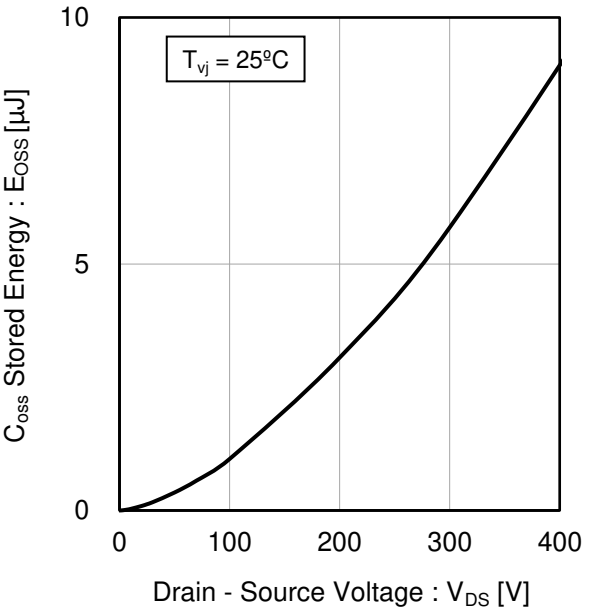

Fig.21 Dynamic Input Characteristics

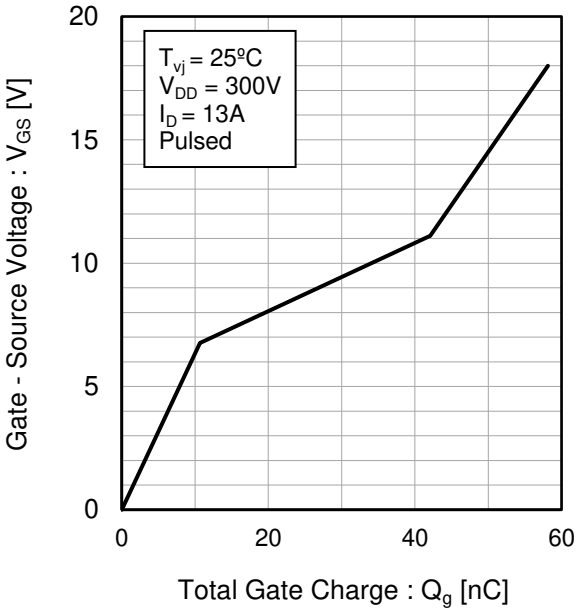

*Gate Charge Waveform

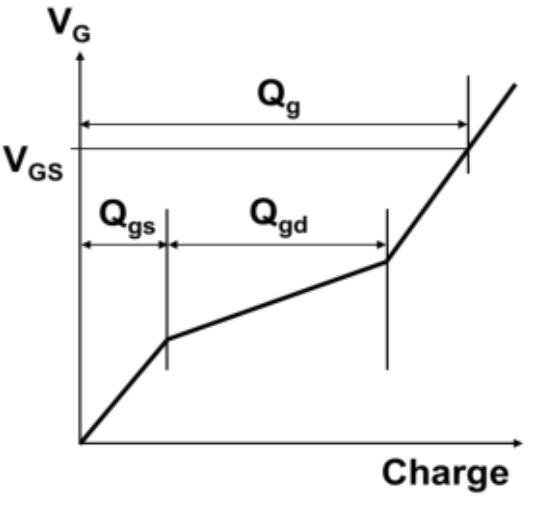

©2022 ROHM Co., Ltd. All rights reserved.

●Electrical characteristic curves

Fig.22 Typical Switching Time vs. External Gate Resistance

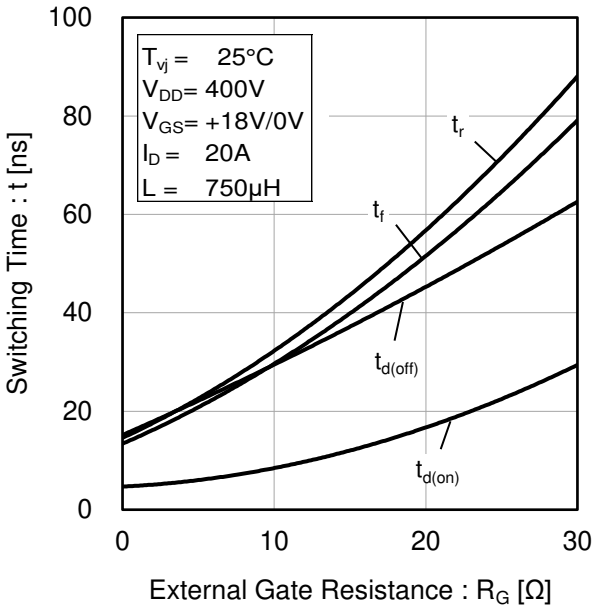

Fig.23 Typical Switching Loss vs. Drain - Source Voltage

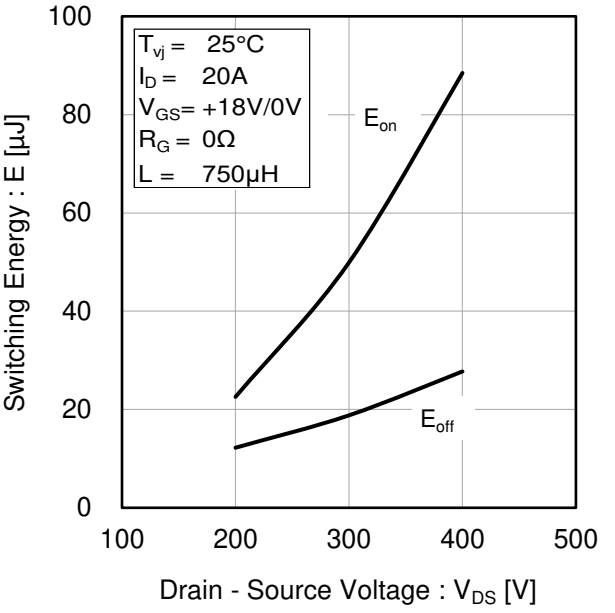

Fig.24 Typical Switching Loss vs. Drain Current

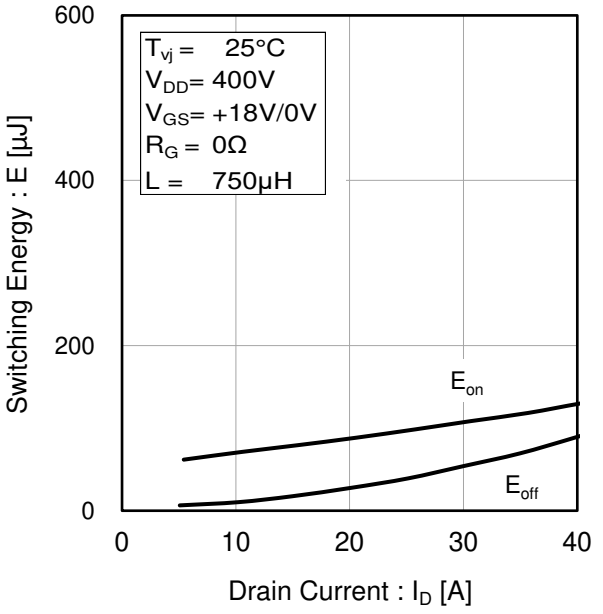

Fig.25 Typical Switching Loss vs. External Gate Resistance

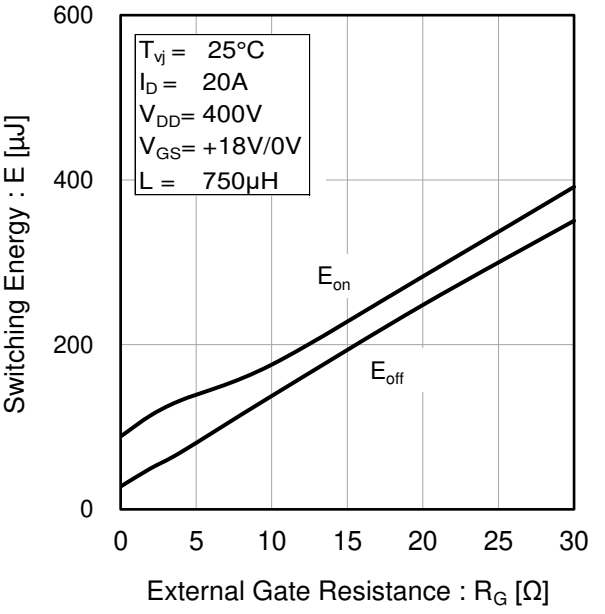

©2022 ROHM Co., Ltd. All rights reserved.

●Measurement circuits and waveforms

Fig.1-1 Gate Charge Measurement Circuit

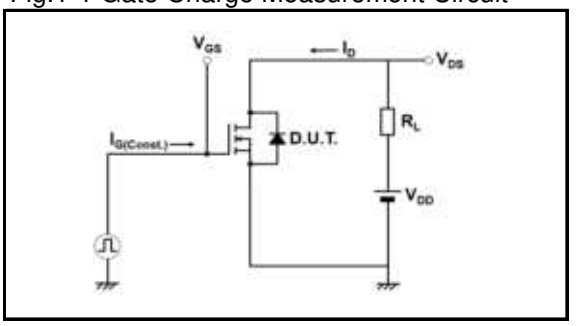

Fig.2-1 Switching Characteristics Measurement Circuit

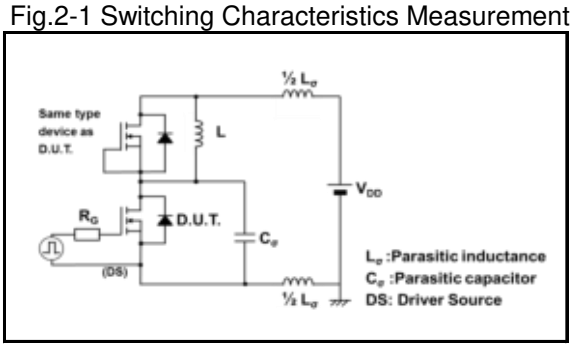

Fig.2-2 Waveforms for Switching Time

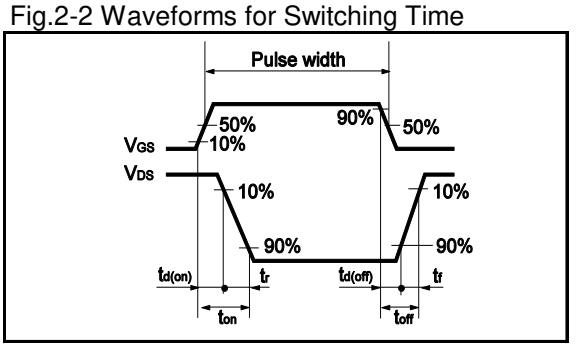

Fig.2-3 Waveforms for Switching Energy Loss

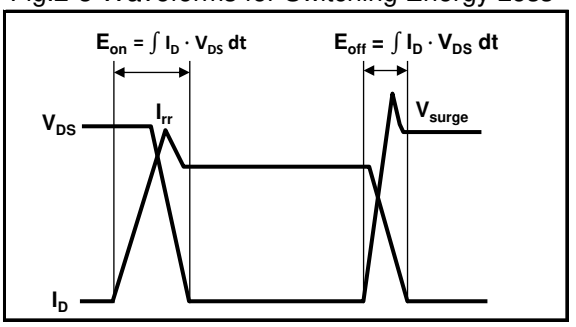

Fig.3-1 Reverse Recovery Time Measurement Circuit

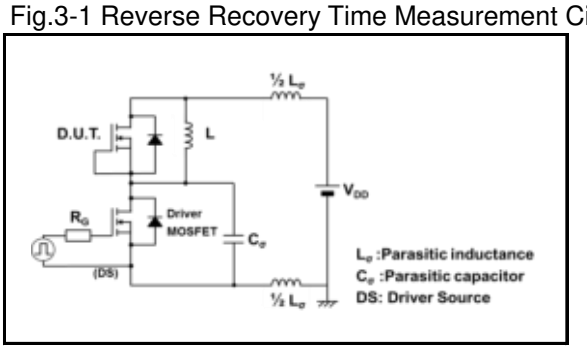

Fig.3-2 Reverse Recovery Waveform

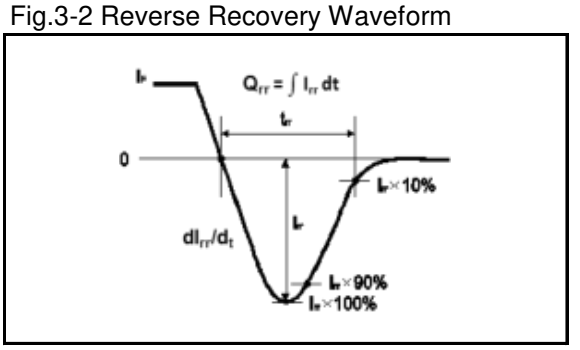

©2022 ROHM Co., Ltd. All rights reserved.

●Package Dimensions

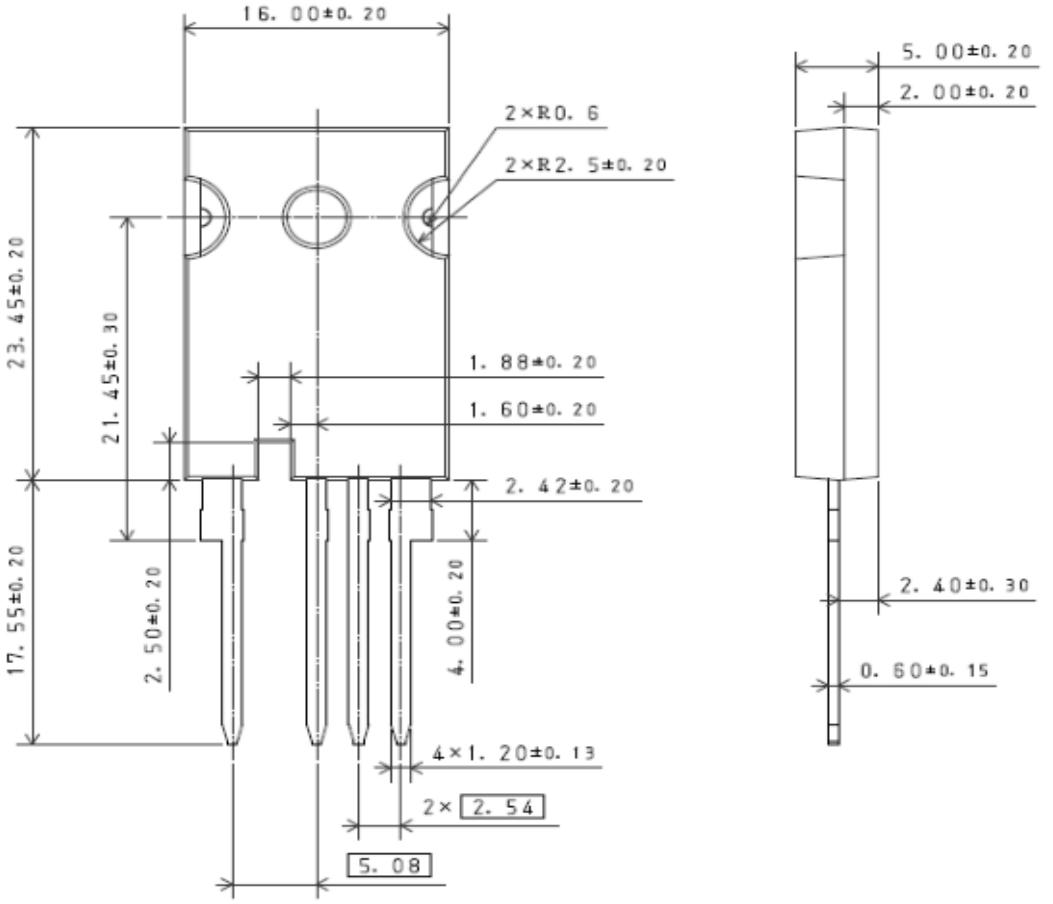

Unit: mm

©2022 ROHM Co., Ltd. All rights reserved.

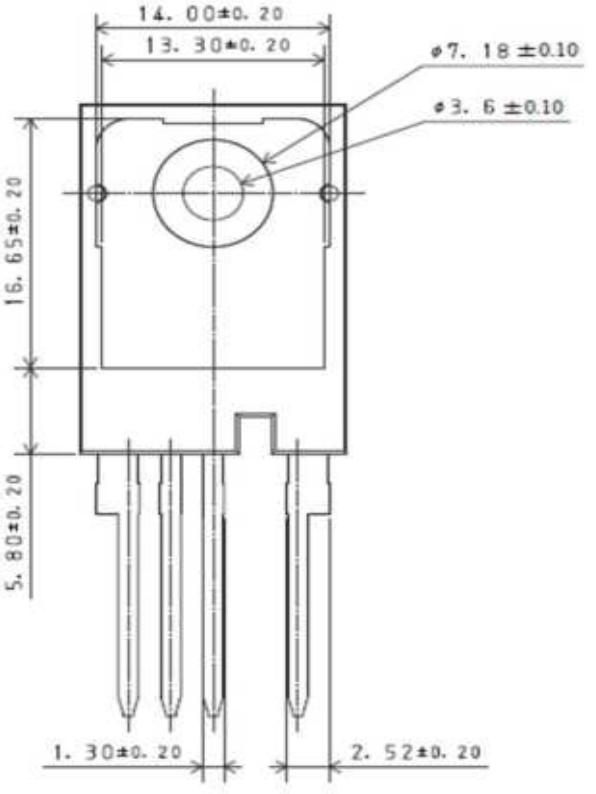

Unit: mm

©2022 ROHM Co., Ltd. All rights reserved.

●Die Bonding Layout

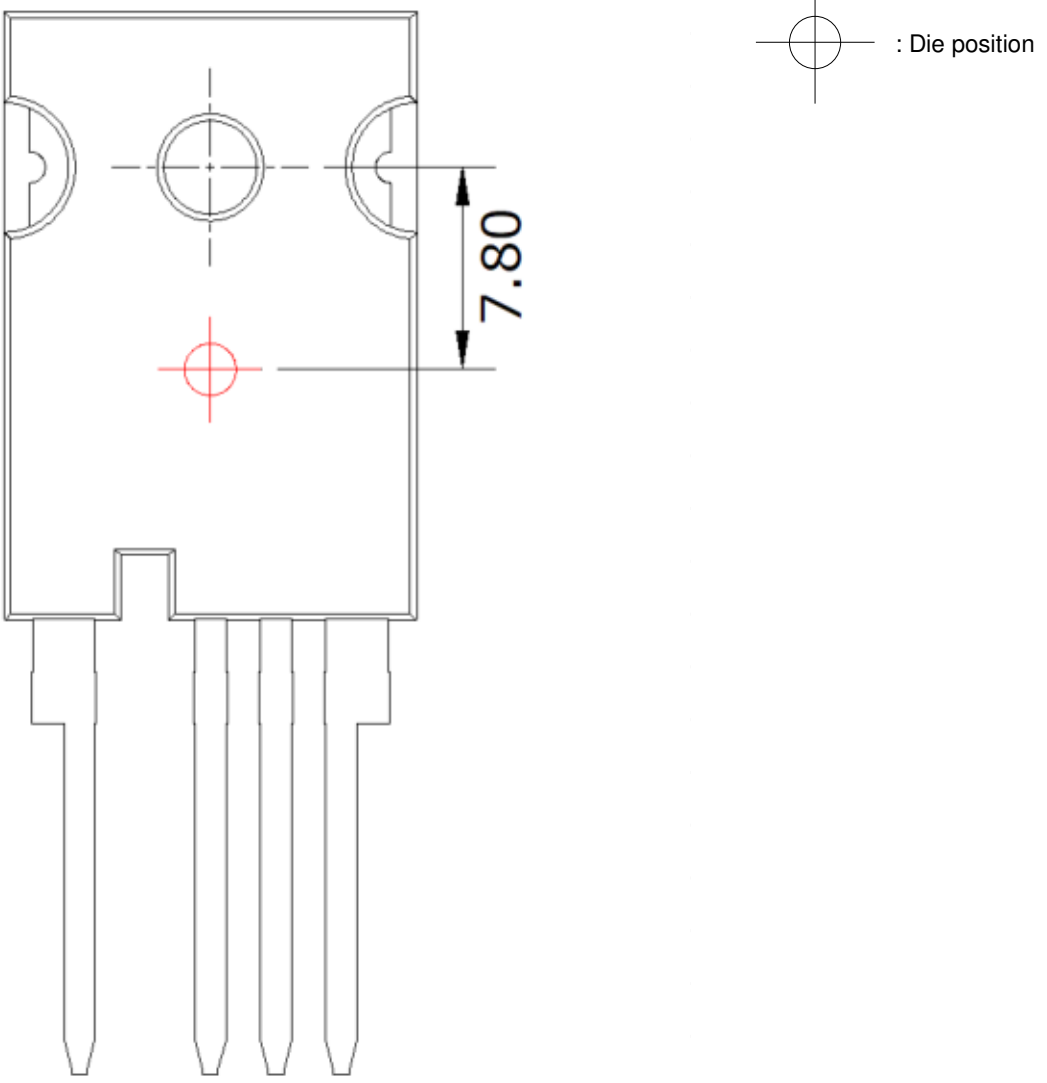

・Front view of the packaging.

・Dimensions are design values.

・If the heat sink is to be installed, it should be in contact with the die bonding point.

Unit: mm

©2022 ROHM Co., Ltd. All rights reserved.

Notes

1) The information contained herein is subject to change without notice.

2) Before you use our Products, please contact our sales representative and verify the latest specifications.

3) Although ROHM is continuously working to improve product reliability and quality, semiconductors can break down and malfunction due to various factors.
Therefore, in order to prevent personal injury or fire arising from failure, please take safety measures such as complying with the derating characteristics, implementing redundant and fire prevention designs, and utilizing backups and fail-safe procedures. ROHM shall have no responsibility for any damages arising out of the use of our Poducts beyond the rating specified by ROHM.

4) Examples of application circuits, circuit constants and any other information contained herein are provided only to illustrate the standard usage and operations of the Products. The peripheral conditions must be taken into account when designing circuits for mass production.

5) The technical information specified herein is intended only to show the typical functions of and examples of application circuits for the Products. ROHM does not grant you, explicitly or implicitly, any license to use or exercise intellectual property or other rights held by ROHM or any other parties. ROHM shall have no responsibility whatsoever for any dispute arising out of the use of such technical information.

6) The Products specified in this document are not designed to be radiation tolerant.

7) For use of our Products in applications requiring a high degree of reliability (as exemplified below), please contact and consult with a ROHM representative : transportation equipment (i.e. cars, ships, trains), primary communication equipment, traffic lights, fire/crime prevention, safety equipment, medical systems, and power transmission systems.

8) Do not use our Products in applications requiring extremely high reliability, such as aerospace equipment, nuclear power control systems, and submarine repeaters.

9) ROHM shall have no responsibility for any damages or injury arising from non-compliance with the recommended usage conditions and specifications contained herein.

10) ROHM has used reasonable care to ensure the accuracy of the information contained in this document. However, ROHM does not warrants that such information is error-free, and ROHM shall have no responsibility for any damages arising from any inaccuracy or misprint of such information.

11) Please use the Products in accordance with any applicable environmental laws and regulations, such as the RoHS Directive. For more details, including RoHS compatibility, please contact a ROHM sales office. ROHM shall have no responsibility for any damages or losses resulting non-compliance with any applicable laws or regulations.

12) When providing our Products and technologies contained in this document to other countries, you must abide by the procedures and provisions stipulated in all applicable export laws and regulations, including without limitation the US Export Administration Regulations and the Foreign Exchange and Foreign Trade Act.

13) This document, in part or in whole, may not be reprinted or reproduced without prior consent of ROHM.

ROHM SEMICONDUCTOR

Thank you for your accessing to ROHM product informations.
More detail product informations and catalogs are available, please contact us.

ROHM Customer Support System

http://www.rohm.com/contact/

© 2012 ROHM Co., Ltd. All rights reserved.

General Precaution

1. Before you use our Products, you are requested to carefully read this document and fully understand its contents. ROHM shall not be in any way responsible or liable for failure, malfunction or accident arising from the use of any ROHM's Products against warning, caution or note contained in this document.

2. All information contained in this document is current as of the issuing date and subject to change without any prior notice. Before purchasing or using ROHM's Products, please confirm the latest information with a ROHM sales representative.

3. The information contained in this document is provided on an "as is" basis and ROHM does not warrant that all information contained in this document is accurate and/or error-free. ROHM shall not be in any way responsible or liable for any damages, expenses or losses incurred by you or third parties resulting from inaccuracy or errors of or concerning such information.

© 2015 ROHM Co., Ltd. All rights reserved.