Power MOSFET

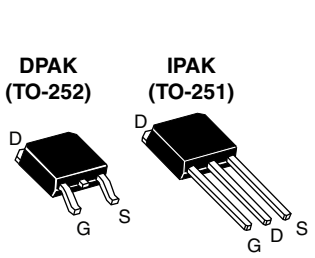

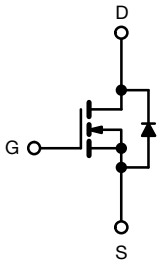

N-Channel MOSFET

FEATURES

- Dynamic dV/dt rating
- Surface-mount (IRLR014, SiHLR014)
- Straight lead (IRLU014, SiHLU014)
- Available in tape and reel
- Logic-level gate drive
- $R_{DS(on)}$ specified at V_{GS} = 4 V and 5 V
- Fast switching
- Material categorization: for definitions of compliance please see www.vishay.com/doc?99912

RoHS COMPLIANT
HALOGEN FREE Available

PRODUCT SUMMARY		
V_{DS} (V)	60	
$R_{DS(on)}$ (Ω)	V_{GS} = 5.0 V	0.20
Q_g (Max.) (nC)	8.4	
Q_{gs} (nC)	3.5	
Q_{gd} (nC)	6.0	
Configuration	Single	

DESCRIPTION

Third generation power MOSFETs from Vishay provide the designer with the best combination of fast switching, ruggedized device design, low on-resistance and cost-effectiveness.

The DPAK is designed for surface mounting using vapor phase, infrared, or wave soldering techniques. The straight lead version (IRLU, SiHLU series) is for through-hole mounting applications. Power dissipation levels up to 1.5 W are possible in typical surface-mount applications.

ORDERING INFORMATION				
Package	DPAK (TO-252)	DPAK (TO-252)	DPAK (TO-252)	IPAK (TO-251)
Lead (Pb)-free and halogen-free	SiHLR014-GE3	-	SiHLR014TRL-GE3	SiHLU014-GE3
Lead (Pb)-free	IRLR014PbF	IRLR014TRPbF[a]	IRLR014TRLPbF[a]	IRLU014PbF

Note

a. See device orientation

ABSOLUTE MAXIMUM RATINGS (T_C = 25 °C, unless otherwise noted)

PARAMETER			SYMBOL	LIMIT	UNIT
Drain-source voltage			V_{DS}	60	V
Gate-source voltage			V_{GS}	± 10	
Continuous drain current	V_{GS} at 5 V	T_C = 25 °C	I_D	7.7	A
		T_C = 100 °C		4.9	
Pulsed drain current [a]			I_{DM}	31	
Linear derating factor				0.20	W/°C
Single pulse avalanche energy [b]				0.020	
Drain-source voltage			E_{AS}	27.4	mJ
Maximum power dissipation	T_C = 25 °C		P_D	25	W
Maximum power dissipation (PCB mount) [e]	T_A = 25 °C			2.5	
Peak diode recovery dV/dt [c]			dV/dt	4.5	V/ns
Operating junction and storage temperature range			T_J, T_{stg}	-55 to +150	°C
Soldering recommendations (peak temperature) [d]	For 10 s			260	

Notes

a. Repetitive rating; pulse width limited by maximum junction temperature (see fig. 11)
b. V_{DD} = 25 V, starting T_J = 25 °C, L = 924 μH, R_g = 25 Ω, I_{AS} = 7.7 A (see fig. 12)
c. $I_{SD} \leq$ 10 A, dI/dt ≤ 90 A/μs, $V_{DD} \leq V_{DS}$, $T_J \leq$ 150 °C
d. 1.6 mm from case
e. When mounted on 1" square PCB (FR-4 or G-10 material)

For technical questions, contact: hvm@vishay.com
THIS DOCUMENT IS SUBJECT TO CHANGE WITHOUT NOTICE. THE PRODUCTS DESCRIBED HEREIN AND THIS DOCUMENT ARE SUBJECT TO SPECIFIC DISCLAIMERS, SET FORTH AT www.vishay.com/doc?91000

THERMAL RESISTANCE RATINGS					
PARAMETER	**SYMBOL**	**MIN.**	**TYP.**	**MAX.**	**UNIT**
Maximum junction-to-ambient	R_{thJA}	-	-	110	°C/W
Maximum junction-to-ambient (PCB mount) [a]	R_{thJA}	-	-	50	
Maximum junction-to-case (drain)	R_{thJC}	-	-	5.0	

Note

a. When mounted on 1" square PCB (FR-4 or G-10 material)

SPECIFICATIONS (T_J = 25 °C, unless otherwise noted)							
PARAMETER	**SYMBOL**	**TEST CONDITIONS**		**MIN.**	**TYP.**	**MAX.**	**UNIT**
Static							
Drain-source breakdown voltage	V_{DS}	V_{GS} = 0 V, I_D = 250 μA		60	-	-	V
V_{DS} temperature coefficient	$\Delta V_{DS}/T_J$	Reference to 25 °C, I_D = 1 mA		-	0.073	-	V/°C
Gate-source threshold voltage	$V_{GS(th)}$	V_{DS} = V_{GS}, I_D = - 250 μA		1.0	-	2.0	V
Gate-source leakage	I_{GSS}	V_{GS} = ± 10 V		-	-	± 100	nA
Zero gate voltage drain current	I_{DSS}	V_{DS} = 60 V, V_{GS} = 0 V		-	-	25	μA
		V_{DS} = 48 V, V_{GS} = 0 V, T_J = 125 °C		-	-	250	
Drain-source on-state resistance	$R_{DS(on)}$	V_{GS} = 5.0 V	I_D = 4.6 A[b]	-	-	0.20	Ω
		V_{GS} = 4.0 V	I_D = 3.9 A[b]	-	-	0.28	
Forward transconductance	g_{fs}	V_{DS} = 25 V, I_D = 4.6 A		3.4	-	-	S
Dynamic							
Input capacitance	C_{iss}	V_{GS} = 0 V, V_{DS} = 25 V, f = 1.0 MHz, see fig. 5		-	400	-	pF
Output capacitance	C_{oss}			-	170	-	
Reverse transfer capacitance	C_{rss}			-	42	-	
Total gate charge	Q_g	V_{GS} = 5.0 V	I_D = 10 A, V_{DS} = 48 V, see fig. 6 and 13[b]	-	-	8.4	nC
Gate-source charge	Q_{gs}			-	-	3.5	
Gate-drain charge	Q_{gd}			-	-	6.0	
Turn-on delay time	$t_{d(on)}$	V_{DD} = 30 V, I_D = 10 A, R_g = 12 Ω, R_D = 2.8 Ω, see fig. 10[b]		-	9.3	-	ns
Rise time	t_r			-	110	-	
Turn-off delay time	$t_{d(off)}$			-	17	-	
Fall time	t_f			-	26	-	
Internal drain inductance	L_D	Between lead, 6 mm (0.25") from package and center of die contact[c] 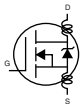		-	4.5	-	nH
Internal source inductance	L_S			-	7.5	-	
Drain-Source Body Diode Characteristics							
Continuous source-drain diode current	I_S	MOSFET symbol showing the integral reverse p - n junction diode		-	-	7.7	A
Pulsed diode forward current [a]	I_{SM}			-	-	31	
Body diode voltage	V_{SD}	T_J = 25 °C, I_S = 7.7 A, V_{GS} = 0 V[b]		-	-	1.6	V
Body diode reverse recovery time	t_{rr}	T_J = 25 °C, I_F = 10 A, dI/dt = 100 A/μs[b]		-	65	130	ns
Body diode reverse recovery charge	Q_{rr}			-	0.33	0.65	μC
Forward turn-on time	t_{on}	Intrinsic turn-on time is negligible (turn-on is dominated by L_S and L_D)					

Notes

a. Repetitive rating; pulse width limited by maximum junction temperature (see fig. 11)

b. Pulse width ≤ 300 μs; duty cycle ≤ 2 %

For technical questions, contact: hvm@vishay.com
THIS DOCUMENT IS SUBJECT TO CHANGE WITHOUT NOTICE. THE PRODUCTS DESCRIBED HEREIN AND THIS DOCUMENT ARE SUBJECT TO SPECIFIC DISCLAIMERS, SET FORTH AT www.vishay.com/doc?91000

TYPICAL CHARACTERISTICS (25 °C, unless otherwise noted)

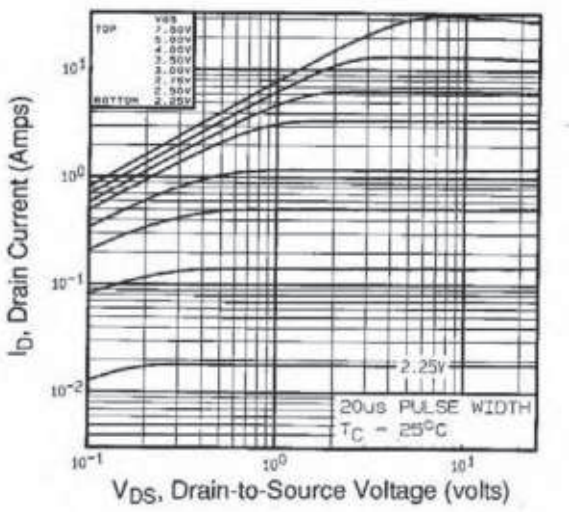

Fig. 1 - Typical Output Characteristics, T_C = 25 °C

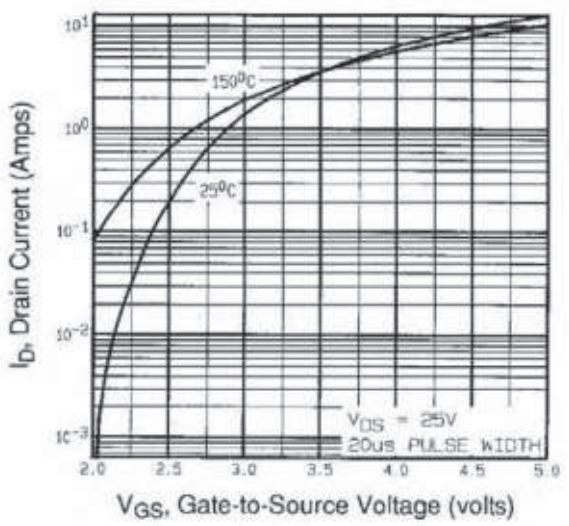

Fig. 2 - Typical Transfer Characteristics

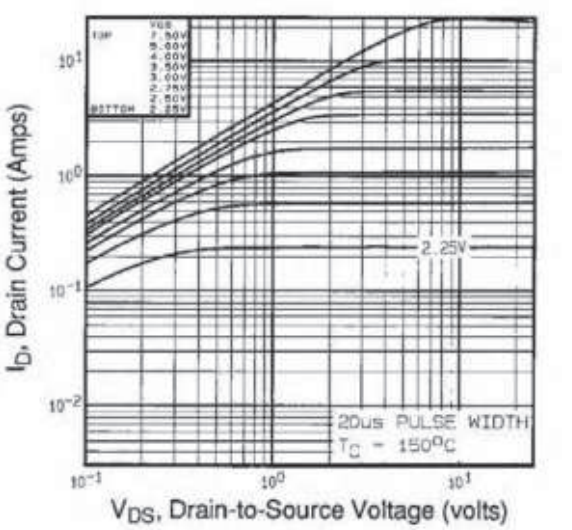

Fig. 1 - Typical Output Characteristics, T_C = 150 °C

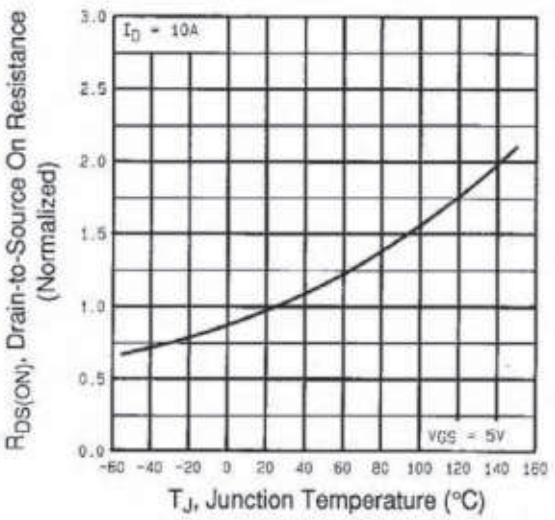

Fig. 3 - Normalized On-Resistance vs. Temperature

For technical questions, contact: hvm@vishay.com
THIS DOCUMENT IS SUBJECT TO CHANGE WITHOUT NOTICE. THE PRODUCTS DESCRIBED HEREIN AND THIS DOCUMENT ARE SUBJECT TO SPECIFIC DISCLAIMERS, SET FORTH AT www.vishay.com/doc?91000

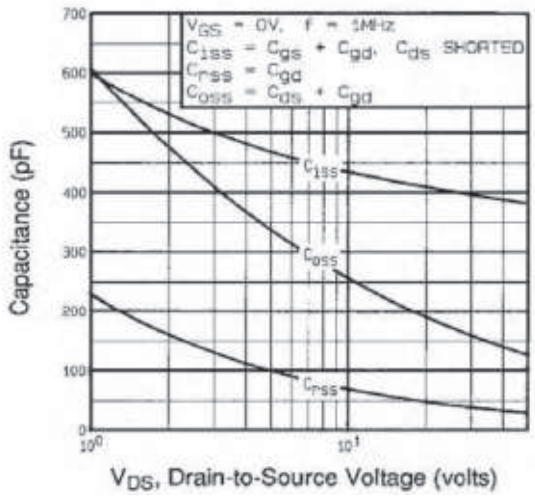

Fig. 4 - Typical Capacitance vs. Drain-to-Source Voltage

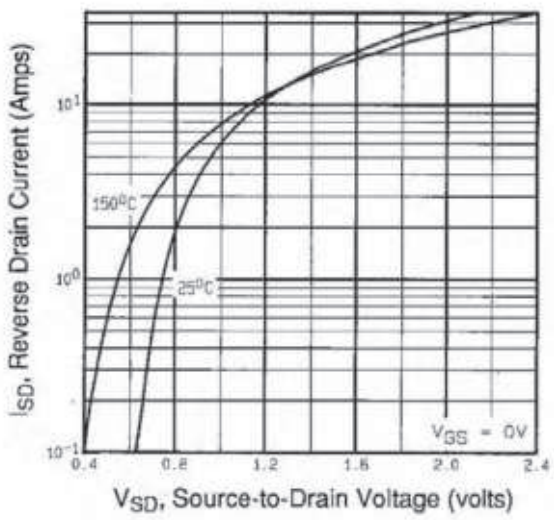

Fig. 6 - Typical Source-Drain Diode Forward Voltage

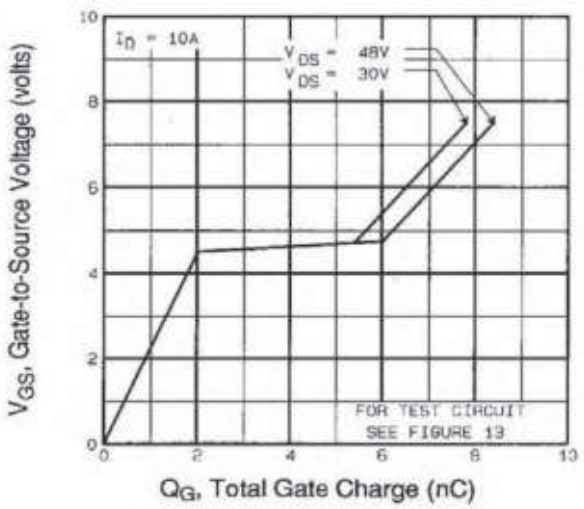

Fig. 5 - Typical Gate Charge vs. Gate-to-Source Voltage

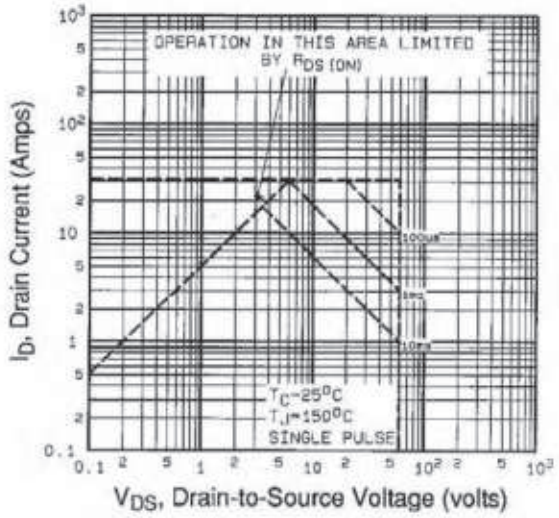

Fig. 7 - Maximum Safe Operating Area

THIS DOCUMENT IS SUBJECT TO CHANGE WITHOUT NOTICE. THE PRODUCTS DESCRIBED HEREIN AND THIS DOCUMENT ARE SUBJECT TO SPECIFIC DISCLAIMERS, SET FORTH AT www.vishay.com/doc?91000

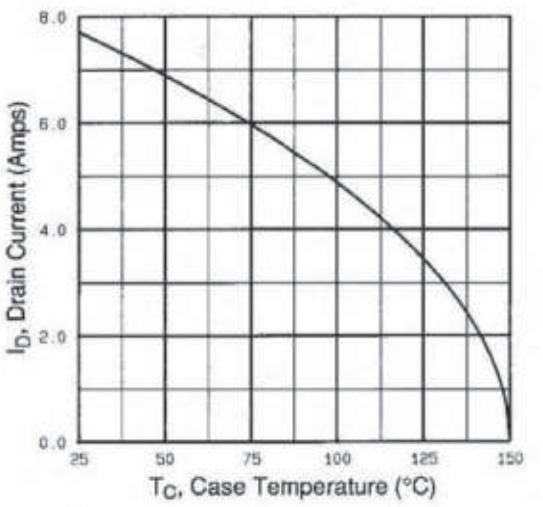

Fig. 8 - Maximum Drain Current vs. Case Temperature

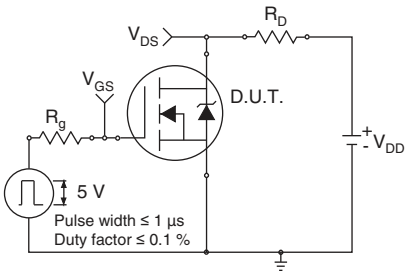

Fig. 10a - Switching Time Test Circuit

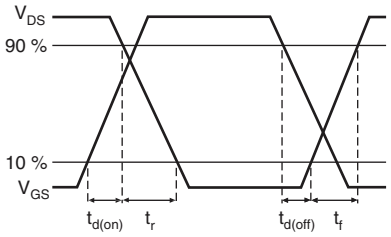

Fig. 10b - Switching Time Waveforms

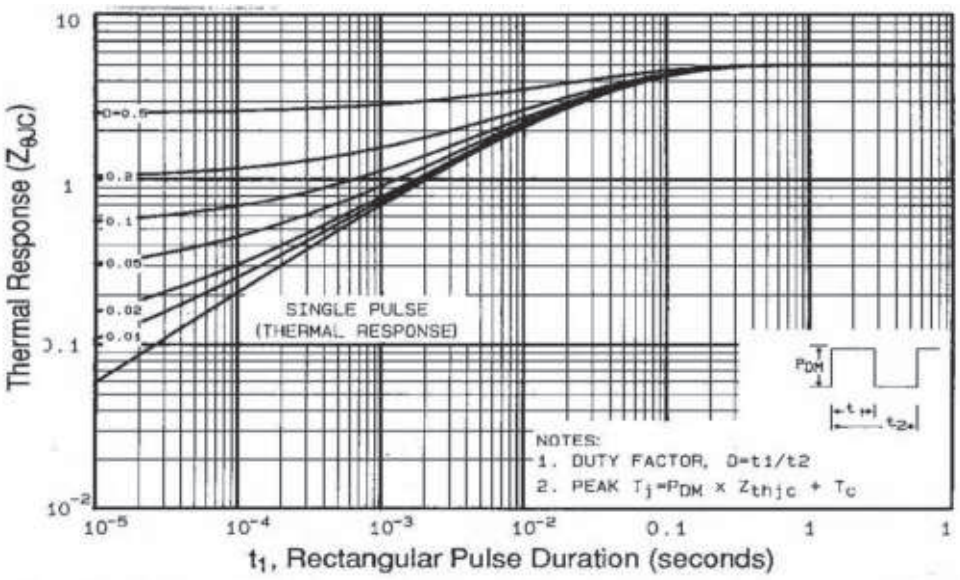

Fig. 9 - Maximum Effective Transient Thermal Impedance, Junction-to-Case

THIS DOCUMENT IS SUBJECT TO CHANGE WITHOUT NOTICE. THE PRODUCTS DESCRIBED HEREIN AND THIS DOCUMENT ARE SUBJECT TO SPECIFIC DISCLAIMERS, SET FORTH AT www.vishay.com/doc?91000

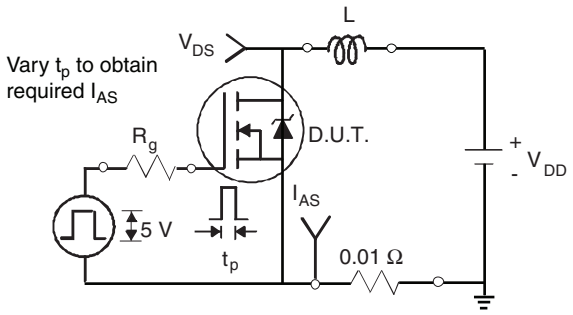

Fig. 12a - Unclamped Inductive Test Circuit

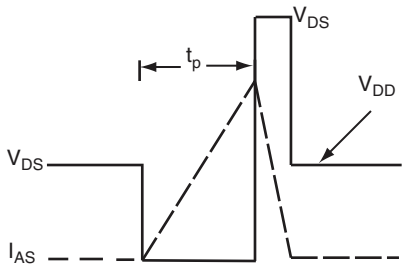

Fig. 12b - Unclamped Inductive Waveforms

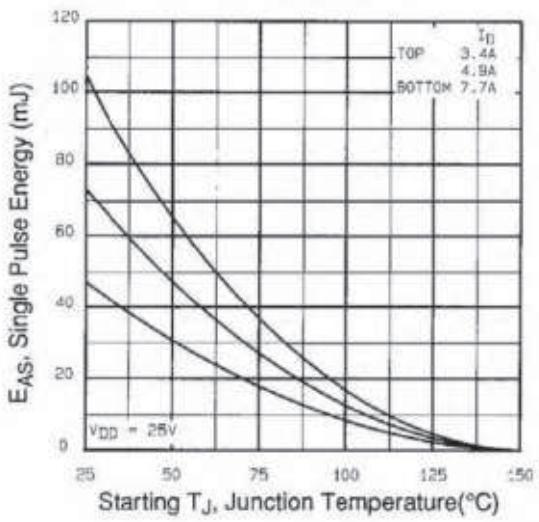

Fig. 12c - Maximum Avalanche Energy vs. Drain Current

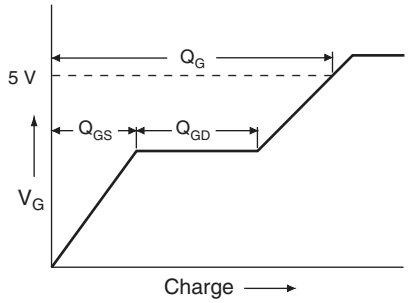

Fig. 13a - Basic Gate Charge Waveform

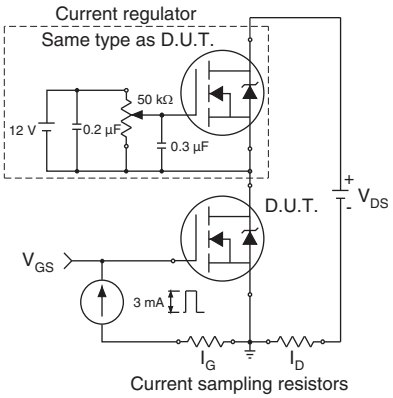

Fig. 13b - Gate Charge Test Circuit

THIS DOCUMENT IS SUBJECT TO CHANGE WITHOUT NOTICE. THE PRODUCTS DESCRIBED HEREIN AND THIS DOCUMENT ARE SUBJECT TO SPECIFIC DISCLAIMERS, SET FORTH AT www.vishay.com/doc?91000

Peak Diode Recovery dV/dt Test Circuit

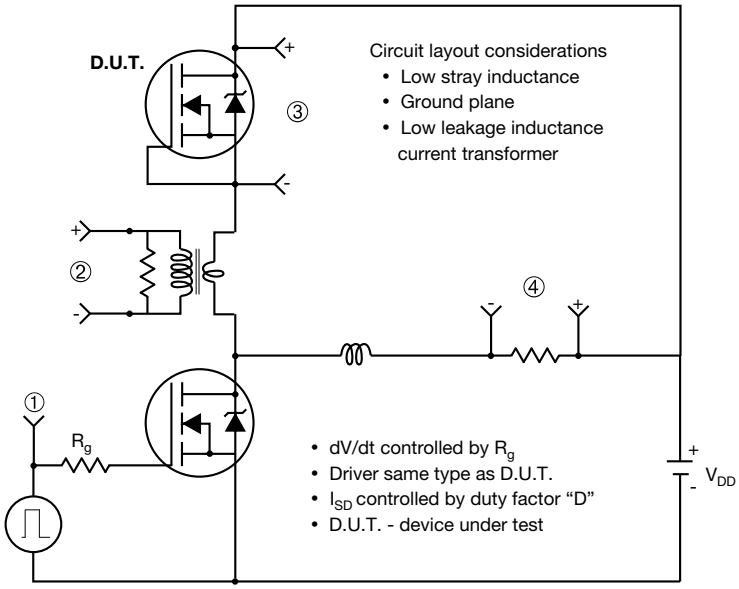

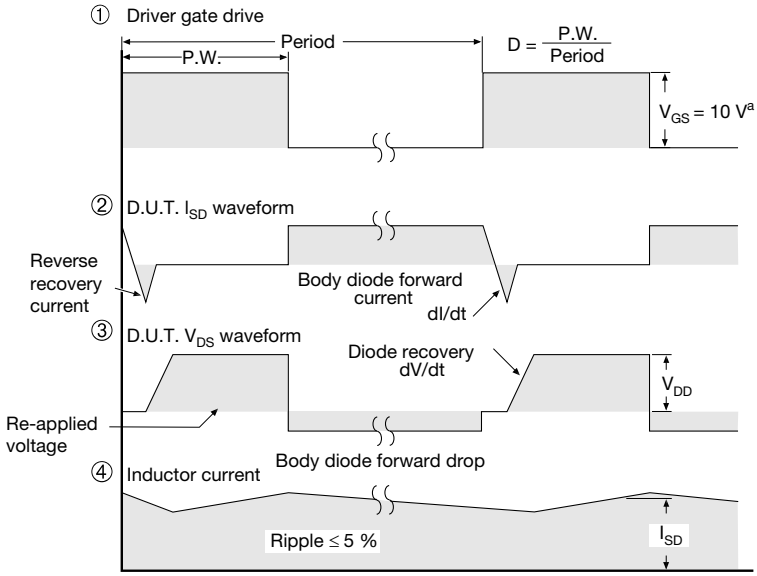

Note

a. V_{GS} = 5 V for logic level devices

Fig. 10 - For N-Channel

Vishay Siliconix maintains worldwide manufacturing capability. Products may be manufactured at one of several qualified locations. Reliability data for Silicon Technology and Package Reliability represent a composite of all qualified locations. For related documents such as package/tape drawings, part marking, and reliability data, see www.vishay.com/ppg?91321.

THIS DOCUMENT IS SUBJECT TO CHANGE WITHOUT NOTICE. THE PRODUCTS DESCRIBED HEREIN AND THIS DOCUMENT ARE SUBJECT TO SPECIFIC DISCLAIMERS, SET FORTH AT www.vishay.com/doc?91000

TO-252AA Case Outline

VERSION 1: FACILITY CODE = Y

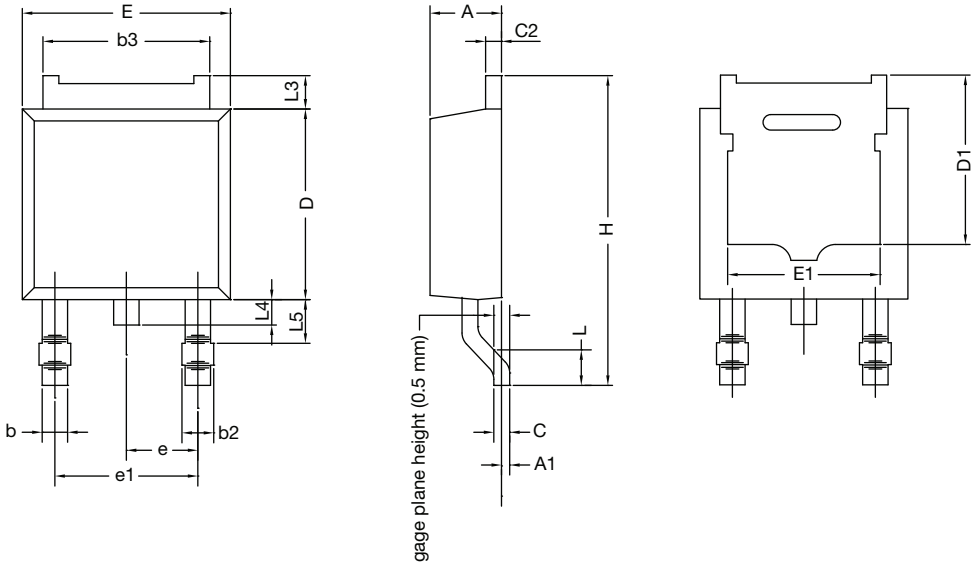

	MILLIMETERS	
DIM.	MIN.	MAX.
A	2.18	2.38
A1	-	0.127
b	0.64	0.88
b2	0.76	1.14
b3	4.95	5.46
C	0.46	0.61
C2	0.46	0.89
D	5.97	6.22
D1	4.10	-
E	6.35	6.73
E1	4.32	-
H	9.40	10.41
e	2.28 BSC	
e1	4.56 BSC	
L	1.40	1.78
L3	0.89	1.27
L4	-	1.02
L5	1.01	1.52

Note

- Dimension L3 is for reference only

For technical questions, contact: pmostechsupport@vishay.com

THIS DOCUMENT IS SUBJECT TO CHANGE WITHOUT NOTICE. THE PRODUCTS DESCRIBED HEREIN AND THIS DOCUMENT ARE SUBJECT TO SPECIFIC DISCLAIMERS, SET FORTH AT www.vishay.com/doc?91000

VERSION 2: FACILITY CODE = N

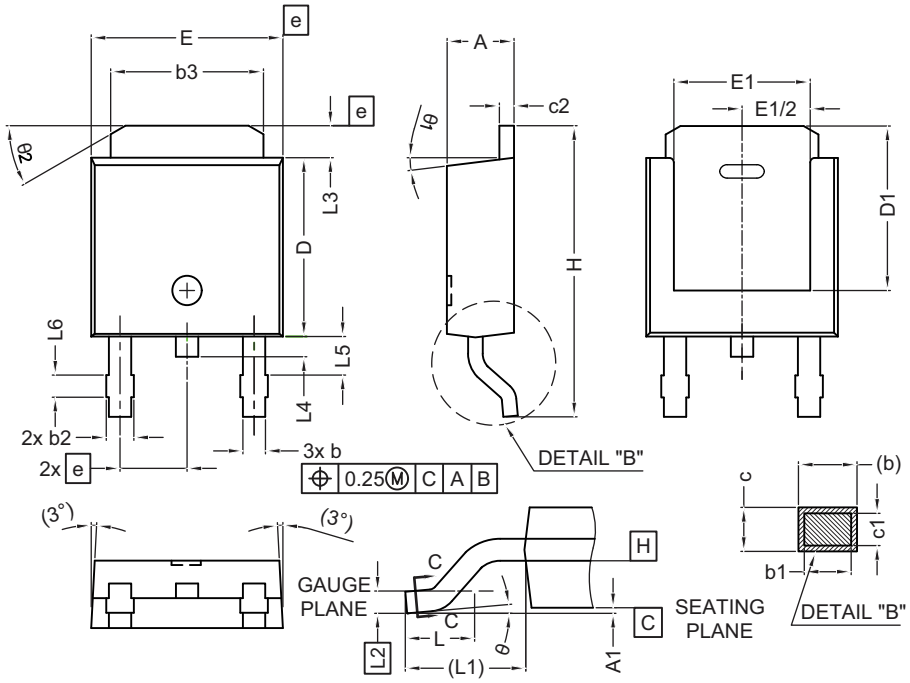

	MILLIMETERS	
DIM.	MIN.	MAX.
A	2.18	2.39
A1	-	0.13
b	0.65	0.89
b1	0.64	0.79
b2	0.76	1.13
b3	4.95	5.46
c	0.46	0.61
c1	0.41	0.56
c2	0.46	0.60
D	5.97	6.22
D1	5.21	-
E	6.35	6.73
E1	4.32	-
e	2.29 BSC	
H	9.94	10.34

	MILLIMETERS	
DIM.	MIN.	MAX.
L	1.50	1.78
L1	2.74 ref.	
L2	0.51 BSC	
L3	0.89	1.27
L4	-	1.02
L5	1.14	1.49
L6	0.65	0.85
θ	0°	10°
θ1	0°	15°
θ2	25°	35°

Notes

- Dimensioning and tolerance confirm to ASME Y14.5M-1994
- All dimensions are in millimeters. Angles are in degrees
- Heat sink side flash is max. 0.8 mm
- Radius on terminal is optional

ECN: E22-0399-Rev. R, 03-Oct-2022
DWG: 5347

For technical questions, contact: pmostechsupport@vishay.com
THIS DOCUMENT IS SUBJECT TO CHANGE WITHOUT NOTICE. THE PRODUCTS DESCRIBED HEREIN AND THIS DOCUMENT ARE SUBJECT TO SPECIFIC DISCLAIMERS, SET FORTH AT www.vishay.com/doc?91000

Case Outline for TO-251AA (High Voltage)

OPTION 1:

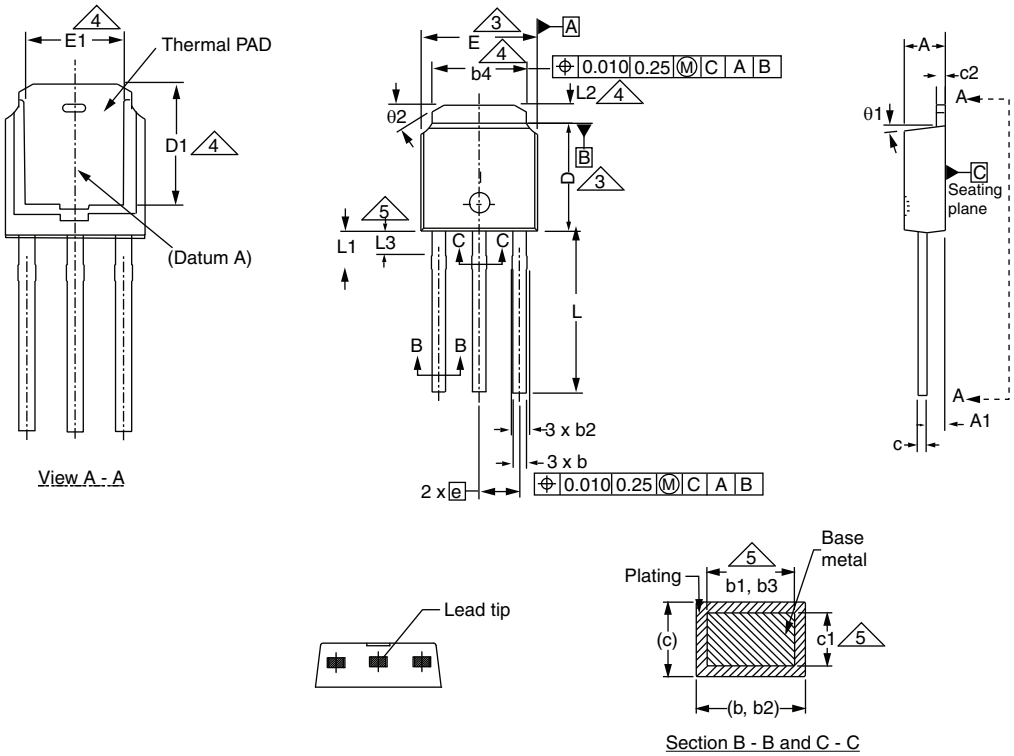

	MILLIMETERS		INCHES	
DIM.	MIN.	MAX.	MIN.	MAX.
A	2.18	2.39	0.086	0.094
A1	0.89	1.14	0.035	0.045
b	0.64	0.89	0.025	0.035
b1	0.65	0.79	0.026	0.031
b2	0.76	1.14	0.030	0.045
b3	0.76	1.04	0.030	0.041
b4	4.95	5.46	0.195	0.215
c	0.46	0.61	0.018	0.024
c1	0.41	0.56	0.016	0.022
c2	0.46	0.86	0.018	0.034
D	5.97	6.22	0.235	0.245

	MILLIMETERS		INCHES	
DIM.	MIN.	MAX.	MIN.	MAX.
D1	5.21	-	0.205	-
E	6.35	6.73	0.250	0.265
E1	4.32	-	0.170	-
e	2.29 BSC		2.29 BSC	
L	8.89	9.65	0.350	0.380
L1	1.91	2.29	0.075	0.090
L2	0.89	1.27	0.035	0.050
L3	1.14	1.52	0.045	0.060
θ1	0'	15'	0'	15'
θ2	25'	35'	25'	35'

ECN: E21-0682-Rev. C, 27-Dec-2021
DWG: 5968

Notes

- Dimensioning and tolerancing per ASME Y14.5M-1994
- Dimension are shown in inches and millimeters
- Dimension D and E do not include mold flash. Mold flash shall not exceed 0.13 mm (0.005") per side. These dimensions are measured at the outermost extremes of the plastic body
- Thermal pad contour optional with dimensions b4, L2, E1 and D1
- Lead dimension uncontrolled in L3
- Dimension b1, b3 and c1 apply to base metal only
- Outline conforms to JEDEC® outline TO-251AA

For technical questions, contact: hvmos.techsupport@vishay.com

THIS DOCUMENT IS SUBJECT TO CHANGE WITHOUT NOTICE. THE PRODUCTS DESCRIBED HEREIN AND THIS DOCUMENT ARE SUBJECT TO SPECIFIC DISCLAIMERS, SET FORTH AT www.vishay.com/doc?91000

OPTION 2: FACILITY CODE = N

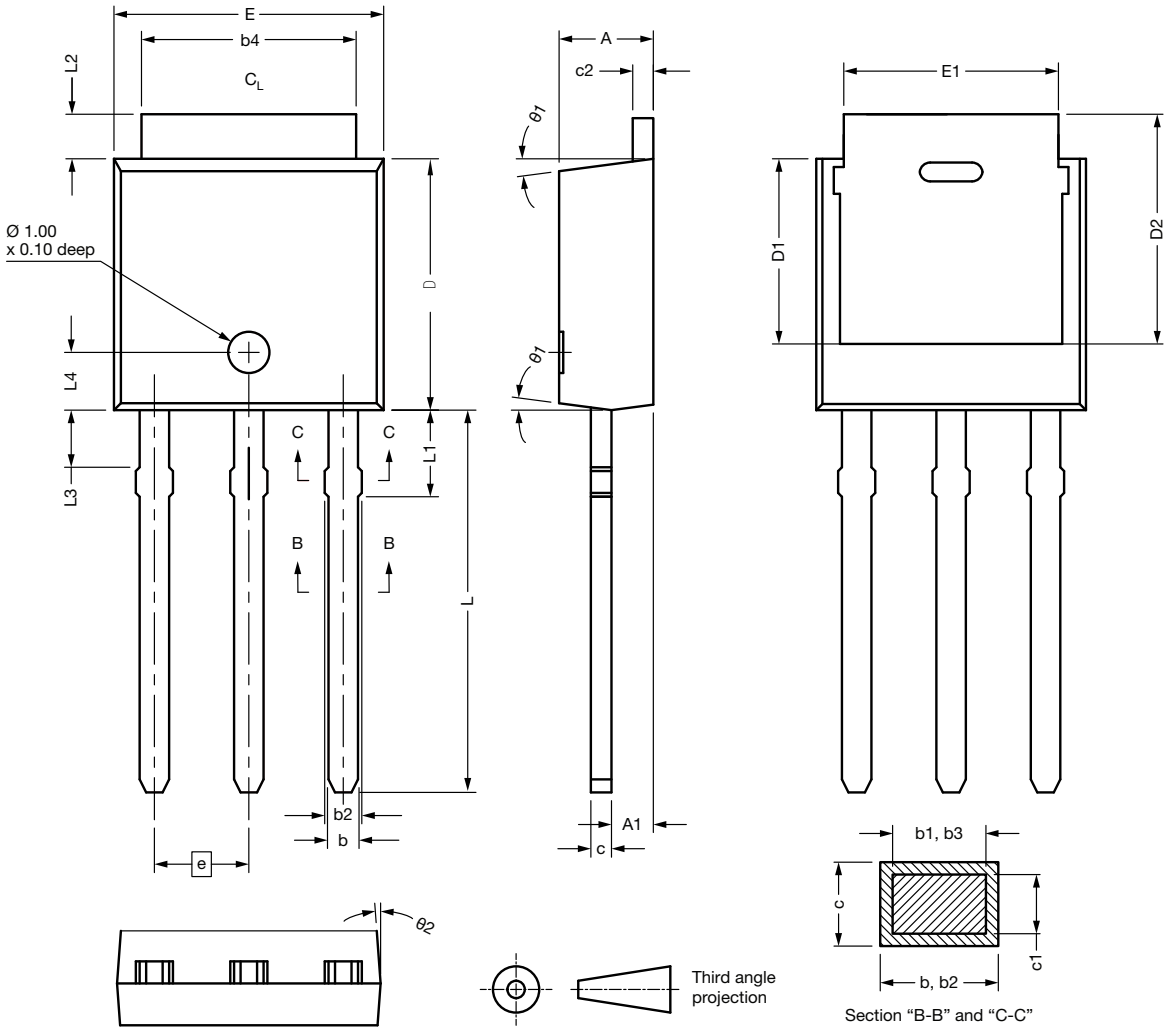

DIM.	MIN.	NOM.	MAX.
A	2.180	2.285	2.390
A1	0.890	1.015	1.140
b	0.640	0.765	0.890
b1	0.640	0.715	0.790
b2	0.760	0.950	1.140
b3	0.760	0.900	1.040
b4	4.950	5.205	5.460
c	0.460	-	0.610
c1	0.410	-	0.560
c2	0.460	-	0.610
D	5.970	6.095	6.220
D1	4.300	-	-

DIM.	MIN.	NOM.	MAX.
D2	5.380	-	-
E	6.350	6.540	6.730
E1	4.32	-	-
e	2.29 BSC		
L	8.890	9.270	9.650
L1	1.910	2.100	2.290
L2	0.890	1.080	1.270
L3	1.140	1.330	1.520
L4	1.300	1.400	1.500
θ1	0°	7.5°	15°
θ2	4°	-	-

ECN: E21-0682-Rev. C, 27-Dec-2021
DWG: 5968

Notes

- Dimensioning and tolerancing per ASME Y14.5M-1994
- All dimension are in millimeters, angles are in degrees
- Heat sink side flash is max. 0.8 mm

For technical questions, contact: hvmos.techsupport@vishay.com
THIS DOCUMENT IS SUBJECT TO CHANGE WITHOUT NOTICE. THE PRODUCTS DESCRIBED HEREIN AND THIS DOCUMENT ARE SUBJECT TO SPECIFIC DISCLAIMERS, SET FORTH AT www.vishay.com/doc?91000

RECOMMENDED MINIMUM PADS FOR DPAK (TO-252)

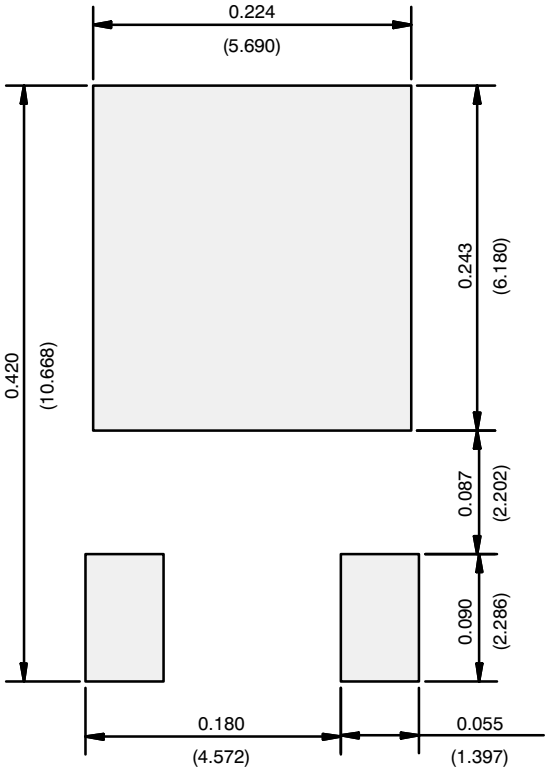

Recommended Minimum Pads
Dimensions in Inches/(mm)

Return to Index

Disclaimer

ALL PRODUCT, PRODUCT SPECIFICATIONS AND DATA ARE SUBJECT TO CHANGE WITHOUT NOTICE TO IMPROVE RELIABILITY, FUNCTION OR DESIGN OR OTHERWISE.

Vishay Intertechnology, Inc., its affiliates, agents, and employees, and all persons acting on its or their behalf (collectively, “Vishay”), disclaim any and all liability for any errors, inaccuracies or incompleteness contained in any datasheet or in any other disclosure relating to any product.

Vishay makes no warranty, representation or guarantee regarding the suitability of the products for any particular purpose or the continuing production of any product. To the maximum extent permitted by applicable law, Vishay disclaims (i) any and all liability arising out of the application or use of any product, (ii) any and all liability, including without limitation special, consequential or incidental damages, and (iii) any and all implied warranties, including warranties of fitness for particular purpose, non-infringement and merchantability.

Statements regarding the suitability of products for certain types of applications are based on Vishay's knowledge of typical requirements that are often placed on Vishay products in generic applications. Such statements are not binding statements about the suitability of products for a particular application. It is the customer's responsibility to validate that a particular product with the properties described in the product specification is suitable for use in a particular application. Parameters provided in datasheets and / or specifications may vary in different applications and performance may vary over time. All operating parameters, including typical parameters, must be validated for each customer application by the customer's technical experts. Product specifications do not expand or otherwise modify Vishay's terms and conditions of purchase, including but not limited to the warranty expressed therein.

Hyperlinks included in this datasheet may direct users to third-party websites. These links are provided as a convenience and for informational purposes only. Inclusion of these hyperlinks does not constitute an endorsement or an approval by Vishay of any of the products, services or opinions of the corporation, organization or individual associated with the third-party website. Vishay disclaims any and all liability and bears no responsibility for the accuracy, legality or content of the third-party website or for that of subsequent links.

Vishay products are not designed for use in life-saving or life-sustaining applications or any application in which the failure of the Vishay product could result in personal injury or death unless specifically qualified in writing by Vishay. Customers using or selling Vishay products not expressly indicated for use in such applications do so at their own risk. Please contact authorized Vishay personnel to obtain written terms and conditions regarding products designed for such applications.

No license, express or implied, by estoppel or otherwise, to any intellectual property rights is granted by this document or by any conduct of Vishay. Product names and markings noted herein may be trademarks of their respective owners.

© 2026 VISHAY INTERTECHNOLOGY, INC. ALL RIGHTS RESERVED

THIS DOCUMENT IS SUBJECT TO CHANGE WITHOUT NOTICE. THE PRODUCTS DESCRIBED HEREIN AND THIS DOCUMENT ARE SUBJECT TO SPECIFIC DISCLAIMERS, SET FORTH AT www.vishay.com/doc?91000