SLA4041

NPN Darlington
With built-in flywheel diode

External dimensions Ⓐ ··· SLA (12-pin)

Absolute maximum ratings (Ta=25°C)

Symbol	Ratings	Unit
V_{CBO}	200	V
V_{CEO}	200	V
V_{EBO}	6	V
I_C	3	A
I_{CP}	6 (PW≤10ms, Du≤50%)	A
I_B	0.2	A
I_F	3 (PW≤0.5ms, Du≤25%)	A
I_{FSM}	6 (PW≤10ms, single)	A
V_R	200	V
P_T	5 (Ta=25°C)	W
	25 (Tc=25°C)	
T_j	150	°C
T_{stg}	–40 to +150	°C

Electrical characteristics (Ta=25°C)

Symbol	Specification min	typ	max	Unit	Conditions
I_{CBO}			10	μA	V_{CB}=200V
I_{EBO}			10	mA	V_{EB}=6V
V_{CEO}	200			V	I_C=10mA
h_{FE}	1000	6000	15000		V_{CE}=4V, I_C=1.5A
V_{CE}(sat)		1.1	1.5	V	I_C=1.5A, I_B=3mA
V_{BE}(sat)		1.7	2.0	V	
V_{FEC}			1.5	V	I_{FEC}=2.0A

●Diode for flyback voltage absorption (Ta=25°C)

Symbol	Specification min	typ	max	Unit	Conditions
V_R	200			V	I_R=10μA
V_F			1.6	V	I_F=1A
I_R			10	μA	V_R=200V
trr		100		ns	I_F=±100mA

■Equivalent circuit diagram

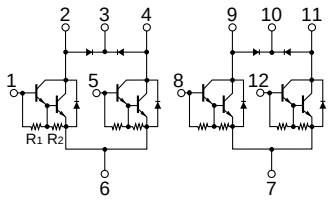

R1: 2kΩ typ R2: 200Ω typ

Not Recommended for New Designs

Characteristic curves

I_C-V_{CE} Characteristics (Typical)

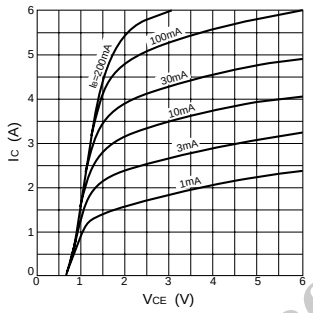

h_{FE}-I_C Characteristics (Typical)

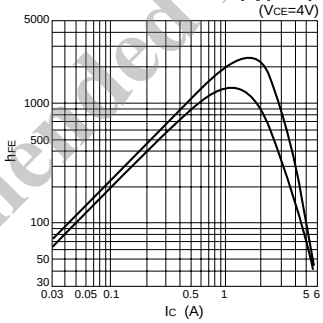

h_{FE}-I_C Temperature Characteristics (Typical)

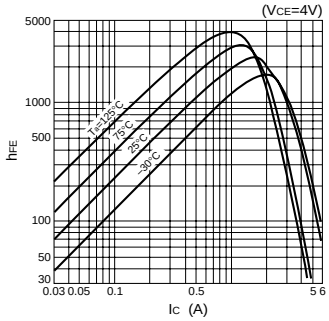

V_{CE}(sat)-I_C Temperature Characteristics (Typical)

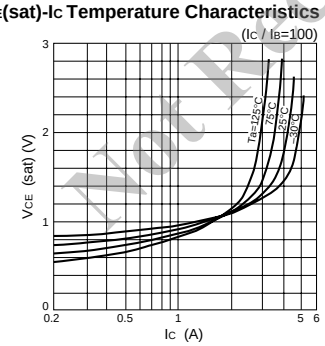

V_{CE}(sat)-I_B Characteristics (Typical)

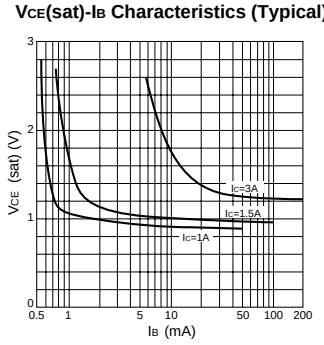

I_C-V_{BE} Temperature Characteristics (Typical)

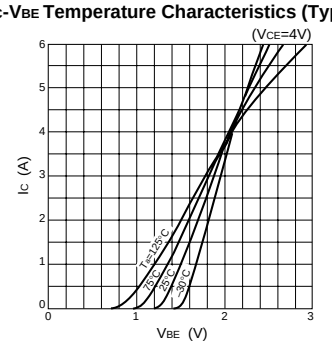

$\theta_{j\text{-}a}$-PW Characteristics

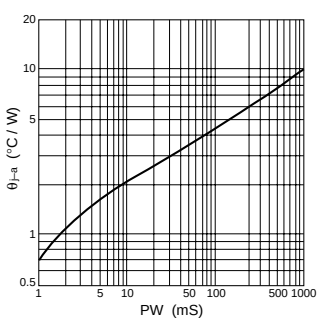

P_T-T_a Characteristics

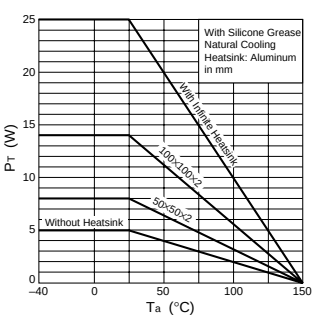

Safe Operating Area (SOA)

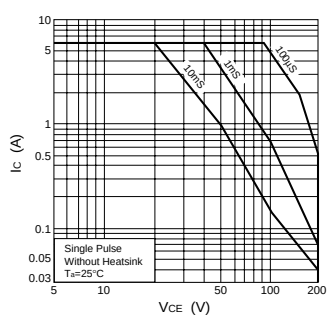

• SIP 8 (STA8Pin)

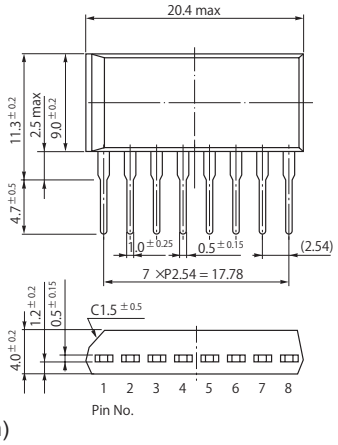

• SIP 10 (STA10Pin)

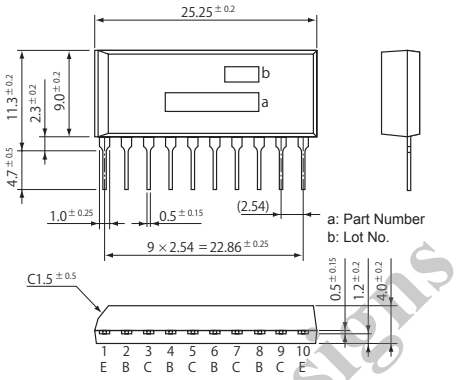

• SIP 12 (SMA12Pin)

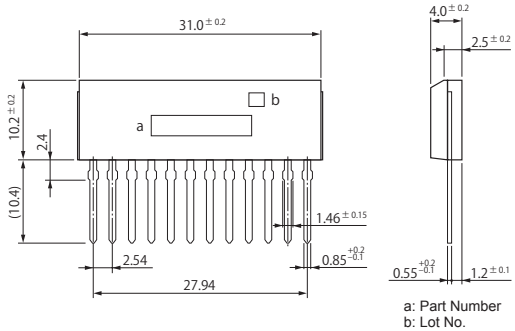

• SIP 15 (SMA15Pin)

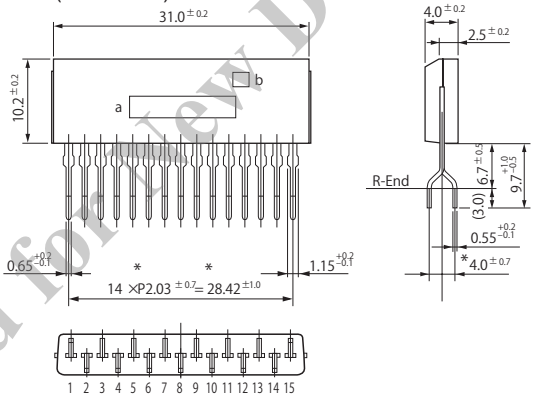

• SIP 12 with Fin (SLA12Pin)

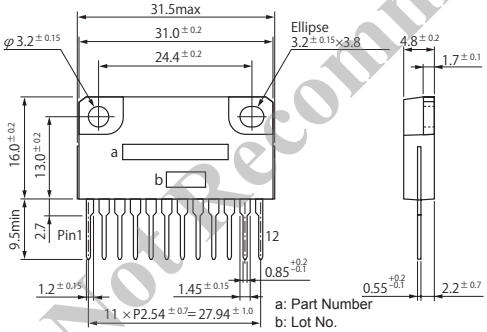

• SIP 15 with Fin (SLA15Pin)

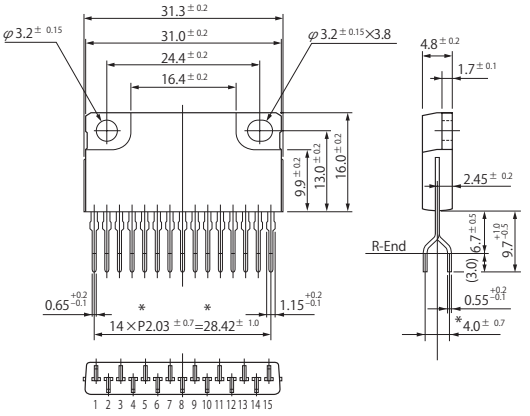

• SIP 21 with Fin (SLA21Pin)

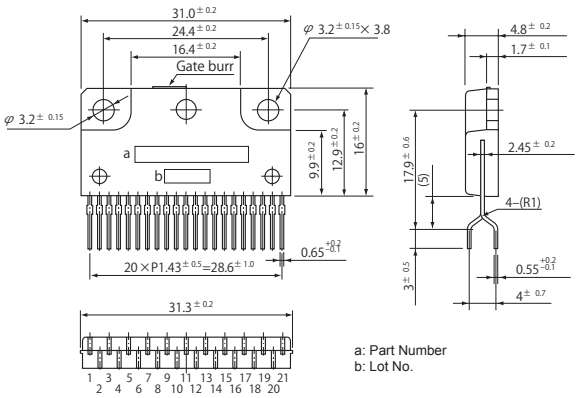

(Unit:mm)

Not Recommended for New Designs