SLA4060

NPN Darlington
General purpose

External dimensions Ⓐ ··· SLA (12-pin)

Absolute maximum ratings (Ta=25°C)

Symbol	Ratings	Unit
V_{CBO}	120	V
V_{CEO}	120	V
V_{EBO}	6	V
I_C	5	A
I_{CP}	8 (PW≤1ms, Du≤50%)	A
I_B	0.5	A
P_T	5 (Ta=25°C)	W
	25 (Tc=25°C)	
V_{ISO}	1000 (Between fin and lead pin, AC)	Vrms
T_j	150	°C
T_{stg}	–40 to +150	°C
$\theta_{j\text{-}c}$	5	°C/W

Electrical characteristics (Ta=25°C)

Symbol	Specification			Unit	Conditions
	min	typ	max		
I_{CBO}			10	μA	V_{CB}=120V
I_{EBO}			10	mA	V_{EB}=6V
V_{CEO}	120			V	I_C=25mA
h_{FE}	2000	5000	15000		V_{CE}=2V, I_C=3A
V_{CE}(sat)		1.0	1.5	V	I_C=3A, I_B=3mA
V_{BE}(sat)		1.6	2.0	V	
t_{on}		0.5		μs	V_{CC}≒30V,
t_{stg}		5.5		μs	I_C=3A,
t_f		1.5		μs	I_{B1}=–I_{B2}=3mA

■Equivalent circuit diagram

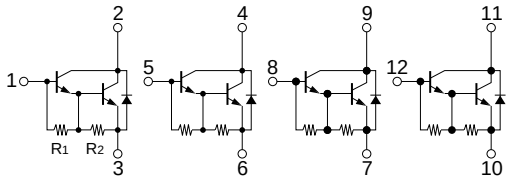

R_1: 2.5kΩ typ R_2: 200Ω typ

Characteristic curves

I_C-V_{CE} Characteristics (Typical)

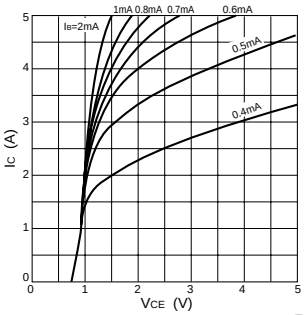

h_{FE}-I_C Characteristics (Typical)

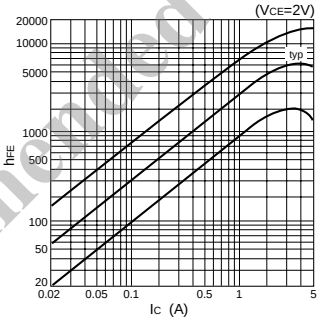

h_{FE}-I_C Temperature Characteristics (Typical)

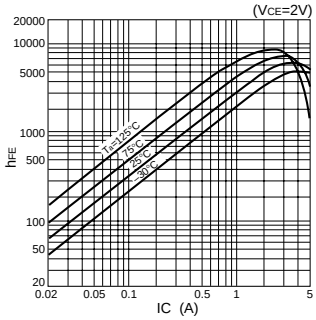

V_{CE}(sat)-I_C Temperature Characteristics (Typical)

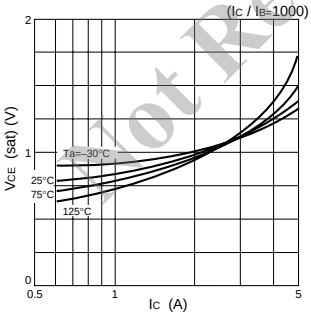

V_{CE}(sat)-I_B Characteristics (Typical)

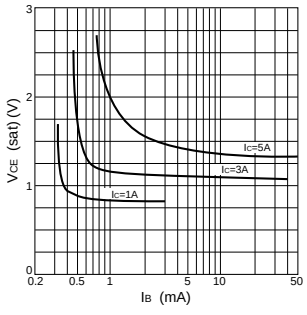

I_C-V_{BE} Temperature Characteristics (Typical)

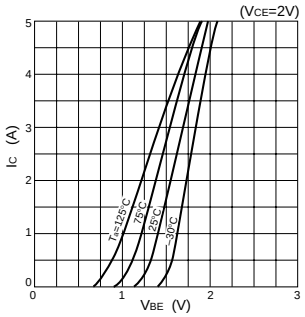

$\theta_{j\text{-}a}$-PW Characteristics

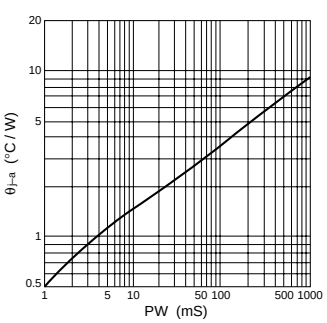

P_T-T_a Characteristics

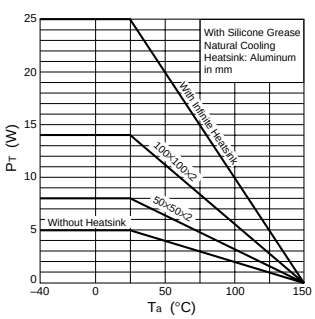

Safe Operating Area (SOA)

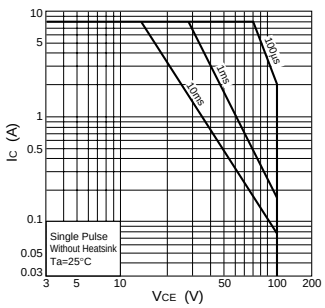

Not Recommended for New Designs

• SIP 8 (STA8Pin)

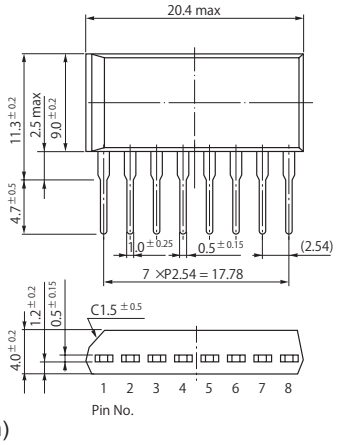

• SIP 10 (STA10Pin)

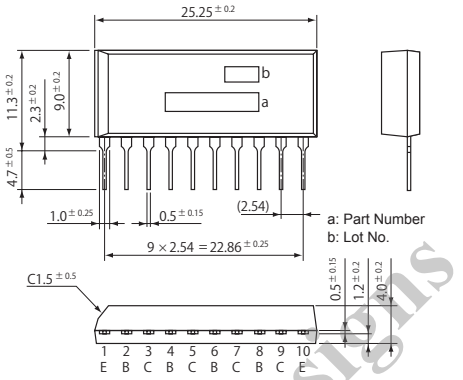

• SIP 12 (SMA12Pin)

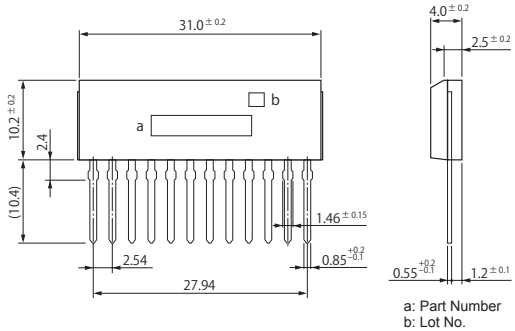

• SIP 15 (SMA15Pin)

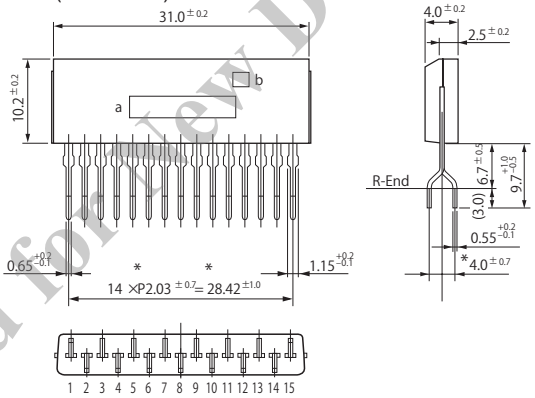

• SIP 12 with Fin (SLA12Pin)

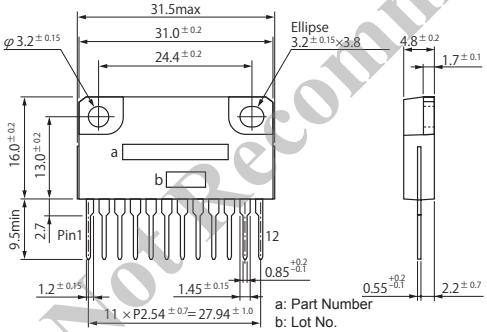

• SIP 15 with Fin (SLA15Pin)

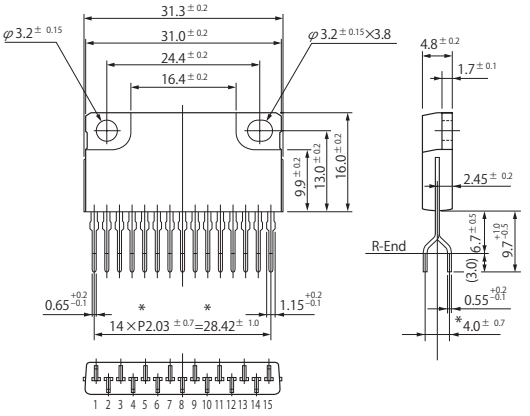

• SIP 21 with Fin (SLA21Pin)

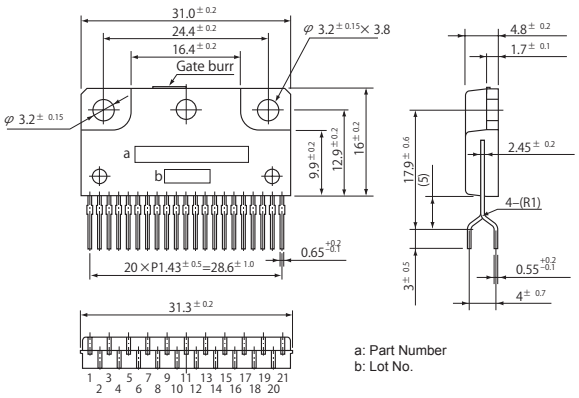

(Unit:mm)

Not Recommended for New Designs