SLA4070

PNP Darlington
General purpose

External dimensions Ⓐ ··· SLA (12-pin)

Absolute maximum ratings

(Ta=25°C)

Symbol	Ratings	Unit
V_{CBO}	–100	V
V_{CEO}	–100	V
V_{EBO}	–6	V
I_C	–5	A
I_{CP}	–8 (PW≤1ms, Du≤50%)	A
I_B	–0.5	A
P_T	5 (Ta=25°C)	W
	25 (Tc=25°C)	
V_{ISO}	1000 (Between fin and lead pin, AC)	Vrms
T_j	150	°C
T_{stg}	–40 to +150	°C
$\theta_{j\text{-}c}$	5	°C/W

Electrical characteristics

(Ta=25°C)

Symbol	Specification			Unit	Conditions
	min	typ	max		
I_{CBO}			–10	μA	V_{CB}=–100V
I_{EBO}			–10	mA	V_{EB}=–6V
V_{CEO}	–100			V	I_C=–10mA
h_{FE}	1000	5000	15000		V_{CE}=–2V, I_C=–3A
V_{CE}(sat)		–1.0	–1.5	V	I_C=–3A, I_B=–6mA
V_{BE}(sat)		–1.6	–2.0	V	

■Equivalent circuit diagram

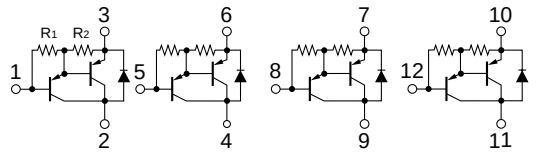

R1: 3kΩ typ R2: 100Ω typ

Not Recommended for New Designs

Characteristic curves

I_C-V_{CE} Characteristics (Typical)

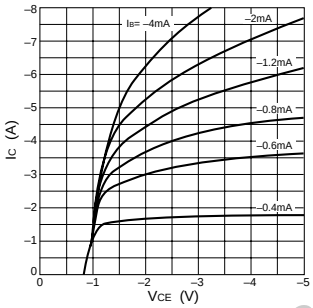

h_{FE}-I_C Characteristics (Typical)

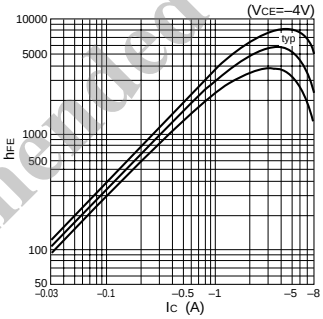

h_{FE}-I_C Temperature Characteristics (Typical)

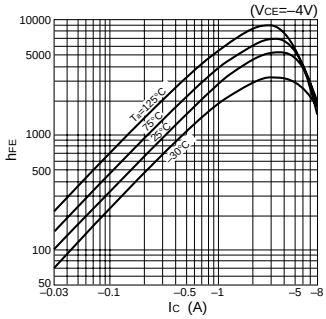

V_{CE}(sat)-I_C Temperature Characteristics (Typical)

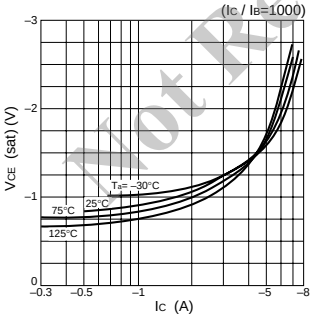

V_{CE}(sat)-I_B Characteristics (Typical)

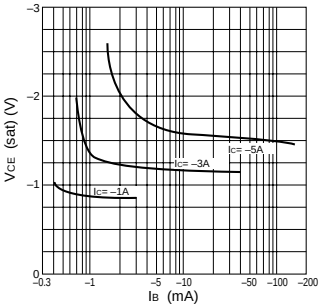

I_C-V_{BE} Temperature Characteristics (Typical)

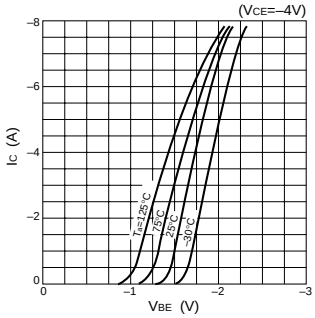

$\theta_{j\text{-}a}$-PW Characteristics

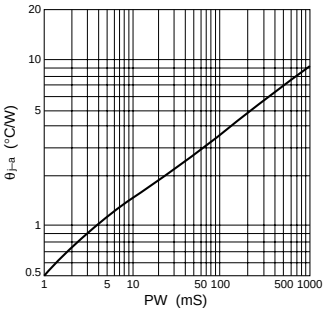

P_T-T_a Characteristics

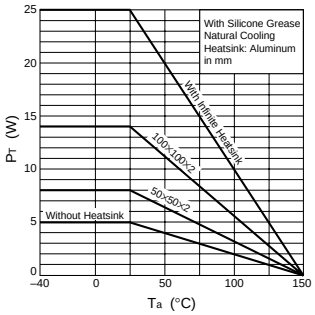

Safe Operating Area (SOA)

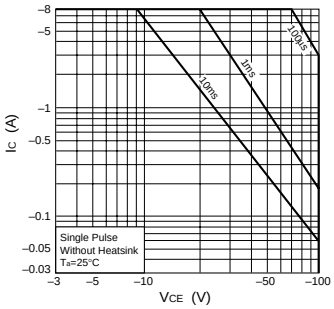

• SIP 8 (STA8Pin)

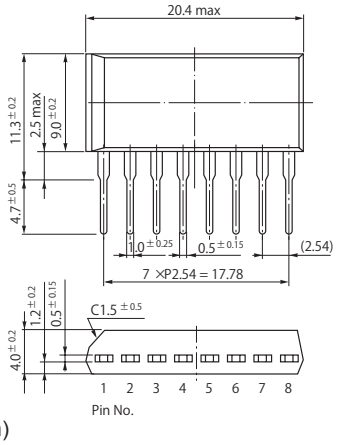

• SIP 10 (STA10Pin)

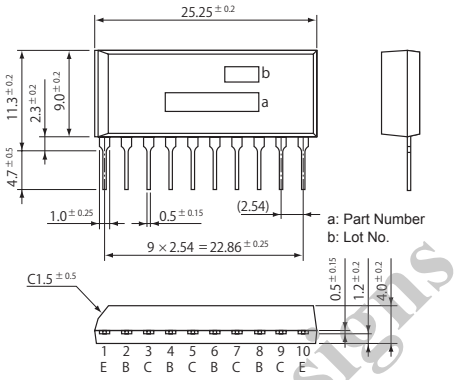

• SIP 12 (SMA12Pin)

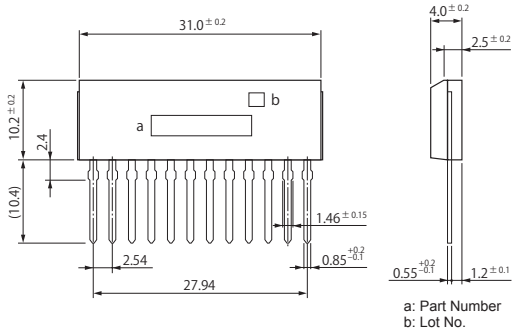

• SIP 15 (SMA15Pin)

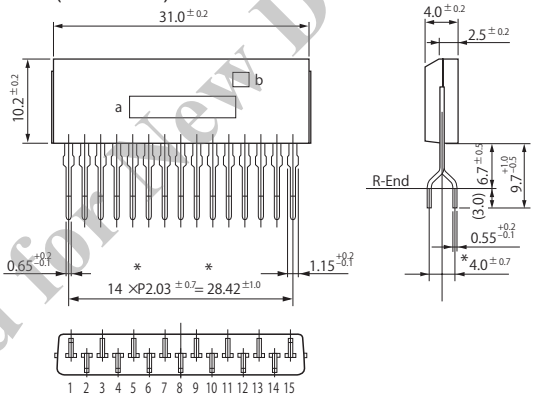

• SIP 12 with Fin (SLA12Pin)

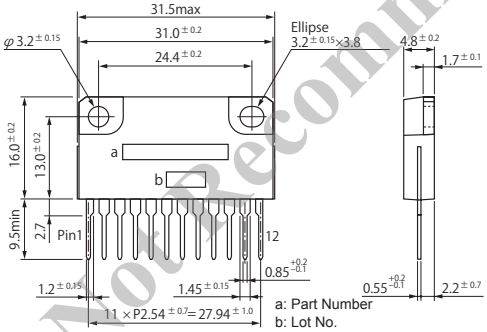

• SIP 15 with Fin (SLA15Pin)

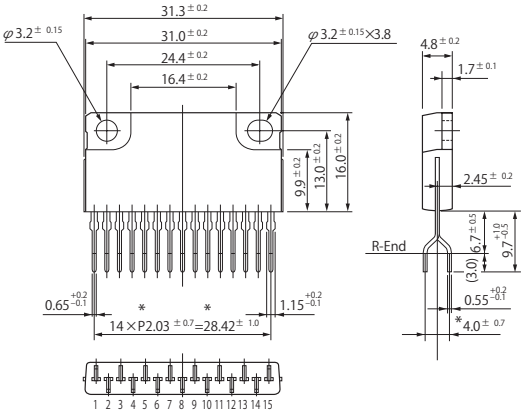

• SIP 21 with Fin (SLA21Pin)

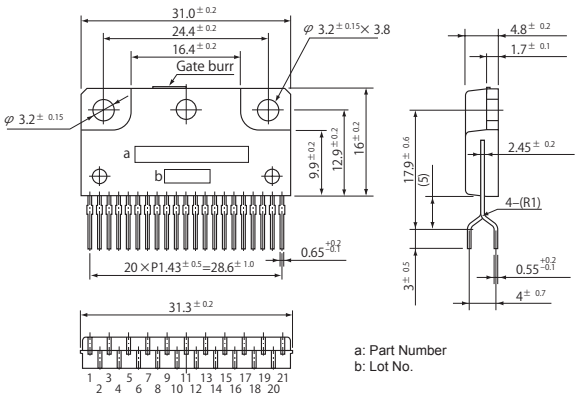

(Unit:mm)

Not Recommended for New Designs