SLA5037

General purpose

External dimensions Ⓐ ··· SLA (12-pin)

Absolute maximum ratings

(Ta=25°C)

Symbol	Ratings	Unit
V_{DSS}	100	V
V_{GSS}	±20	V
I_D	±10	A
$I_{D(pulse)}$	±40 (PW≤1ms)	A
E_{AS}*	200	mJ
P_T	5 (Ta=25°C, with all circuits operating, without heatsink)	W
	40 (Tc=25°C,with all circuits operating, with infinite heatsink)	W
θj-a	25 (Junction-Air, Ta=25°C, with all circuits operating)	°C/W
θj-c	3.13 (Junction-Case, Tc=25°C, with all circuits operating)	°C/W
V_{ISO}	1000 (Between fin and lead pin, AC)	Vrms
Tch	150	°C
Tstg	–40 to +150	°C

* : V_{DD}=25V, L=3mH, I_D=10A, unclamped, R_G=50Ω, see Fig. E on page 15.

Electrical characteristics

(Ta=25°C)

Symbol	Specifications			Unit	Conditions
	min	typ	max		
$V_{(BR)DSS}$	100			V	I_D=100μA, V_{GS}=0V
I_{GSS}			±100	nA	V_{GS}=±20V
I_{DSS}			100	μA	V_{DS}=100V, V_{GS}=0V
V_{TH}	1.0		2.0	V	V_{DS}=10V, I_D=250μA
Re(yfs)	8	13		S	V_{DS}=10V, I_D=5A
$R_{DS(ON)}$		60	80	mΩ	V_{GS}=10V, I_D=5A
		75	95	mΩ	V_{GS}=4V, I_D=5A
Ciss		1630		pF	V_{DS}=10V, f=1.0MHz,
Coss		480		pF	V_{GS}=0V
td(on)		30		ns	I_D=5A,
tr		45		ns	V_{DD}≒
td(off)		100		ns	R_L=10Ω, V_{GS}=5V,
tf		40		ns	see Fig. 3 on page 16.
V_{SD}		1.1	1.5	V	I_{SD}=10A, V_{GS}=0V
trr		300		ns	I_{SD}=±100mA

■Equivalent circuit diagram

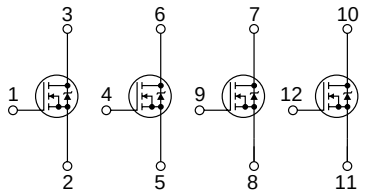

I_D-V_{DS} Characteristics (Typical)

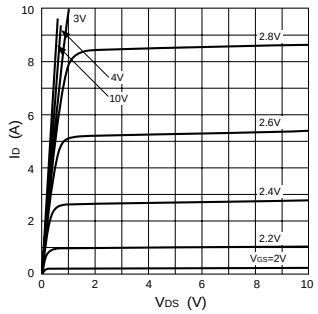

I_D-V_{GS} Characteristics (Typical)

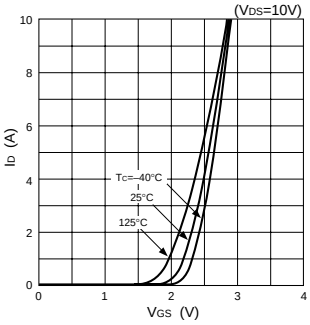

$R_{DS(ON)}$-I_D Characteristics (Typical)

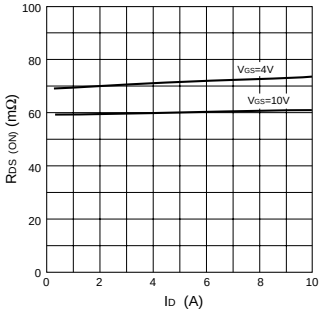

Re(yfs)-I_D Characteristics (Typical)

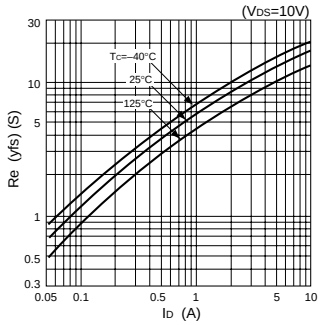

$R_{DS(ON)}$-T_C Characteristics (Typical)

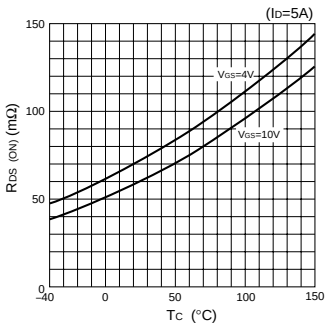

Capacitance-V_{DS} Characteristics (Typical)

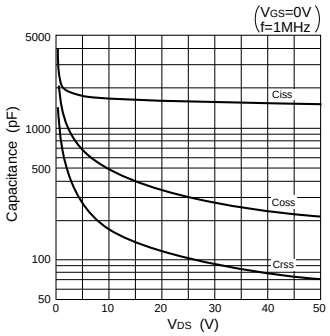

I_{DR}-V_{SD} Characteristics (Typical)

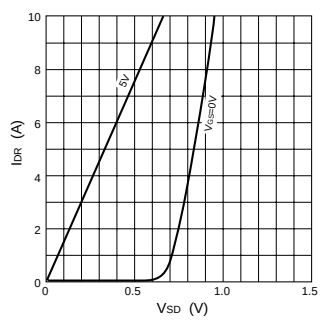

Safe Operating Area (SOA)

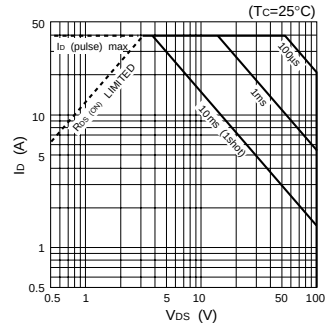

P_T-T_a Characteristics

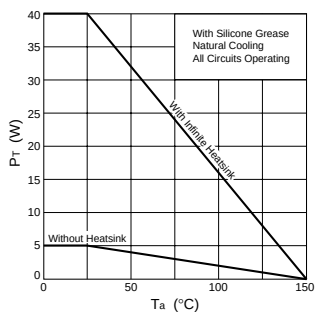

• SIP 8 (STA8Pin)

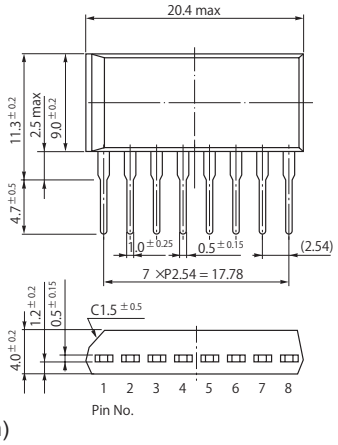

• SIP 10 (STA10Pin)

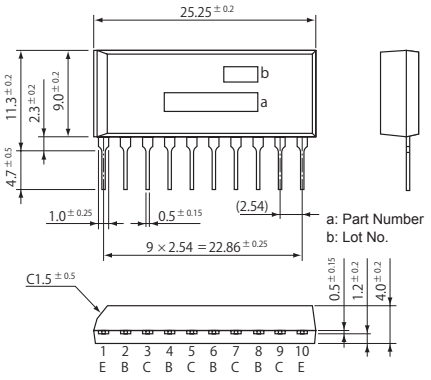

• SIP 12 (SMA12Pin)

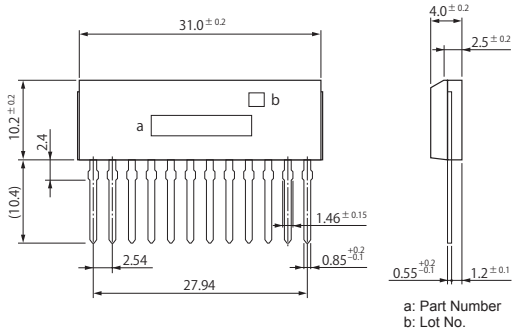

• SIP 15 (SMA15Pin)

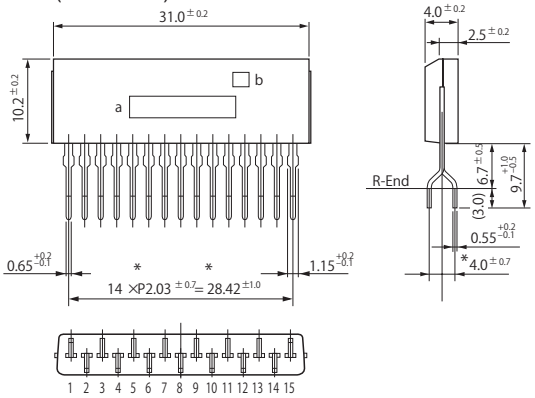

• SIP 12 with Fin (SLA12Pin)

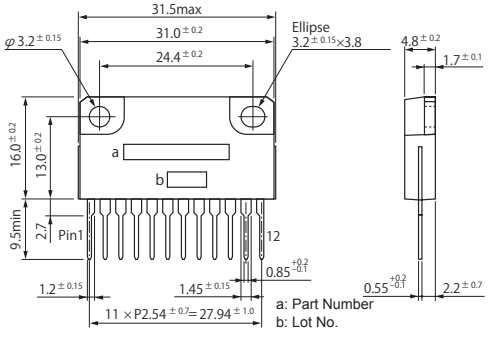

• SIP 15 with Fin (SLA15Pin)

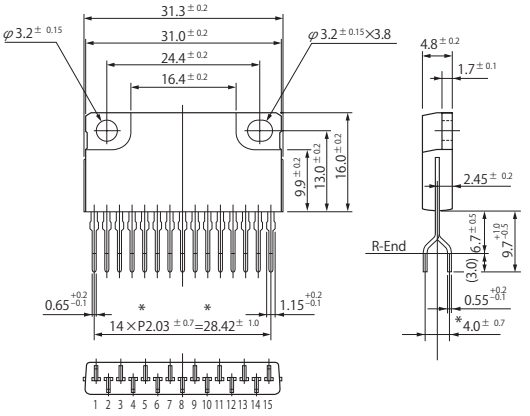

• SIP 21 with Fin (SLA21Pin)

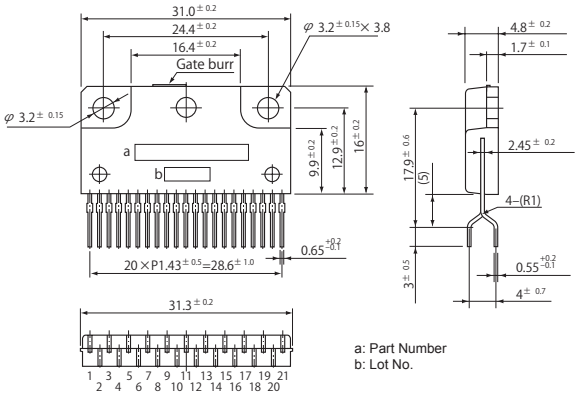

(Unit:mm)