SLA5073

N-channel
5-phase motor drive

External dimensions Ⓐ ··· SLA (15-pin)

Absolute maximum ratings (Ta=25°C)

Symbol	Ratings	Unit
V_{DSS}	60	V
V_{GSS}	±20	V
I_D	5	A
$I_{D(pulse)}$	8 (PW≤1ms, Du≤25%)	A
P_T	5 (Ta=25°C, with all circuits operating, without heatsink)	W
	30 (Tc=25°C, with all circuits operating, with infinite heatsink)	
θ_{j-a}	25 (Junction-Air, Ta=25°C, with all circuits operating)	°C/W
θ_{j-c}	4.17 (Junction-Case, Tc=25°C, with all circuits operating)	°C/W
V_{ISO}	1000 (Between fin and lead pin, AC)	Vrms
Tch	150	°C
Tstg	–40 to +150	°C

Electrical characteristics (Ta=25°C)

Symbol	Specification min	typ	max	Unit	Conditions
$V_{(BR)DSS}$	60			V	I_D=100μA, V_{GS}=0V
I_{GSS}			±100	nA	V_{GS}=±20V
I_{DSS}			100	μA	V_{DS}=60V, V_{GS}=0V
V_{TH}	1.0		2.0	V	V_{DS}=10V, I_D=250μA
$Re_{(yfs)}$		5.5		S	V_{DS}=10V, I_D=3A
$R_{DS(ON)}$			0.3	Ω	V_{GS}=4V, I_D=3A
Ciss		320		pF	V_{DS}=10V,
Coss		160		pF	f=1.0MHz,
Crss		35		pF	V_{GS}=0V
$td_{(on)}$		16		ns	I_D=3A,
tr		65		ns	V_{DD}≒20V,
$td_{(off)}$		70		ns	R_L=6.67Ω, V_{GS}=5V,
tf		45		ns	see Fig. 3 on page 16.
V_{SD}		1.2		V	I_{SD}=4A, V_{GS}=0V
t_{rr}		65		ns	I_{SD}=3A, V_{GS}=0V, di/dt=100A/μs

■Equivalent circuit diagram

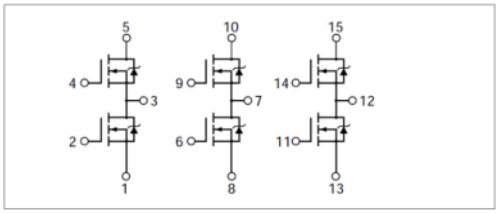

Characteristic curves

I_D-V_{DS} Characteristics (Typical)

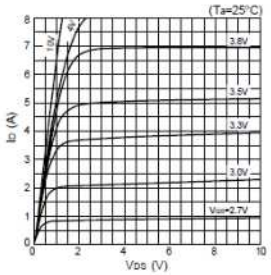

I_D-V_{GS} Characteristics (Typical)

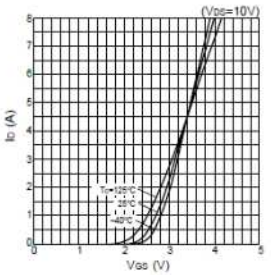

$R_{DS(ON)}$-I_D Characteristics (Typical)

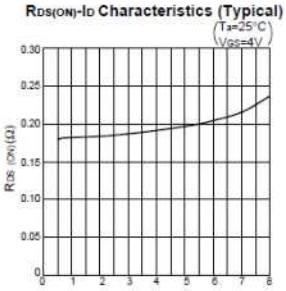

$Re_{(yfs)}$-I_D Characteristics (Typical)

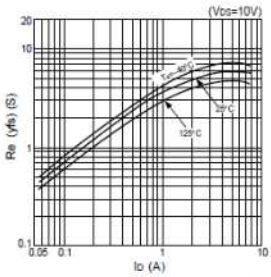

$R_{DS(ON)}$-T_C Characteristics (Typical)

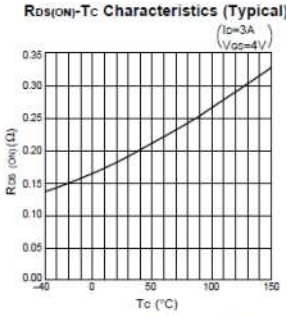

Capacitance-V_{DS} Characteristics (Typical)

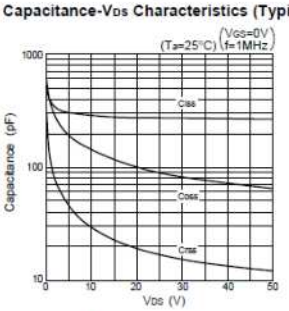

I_{DR}-V_{SD} Characteristics (Typical)

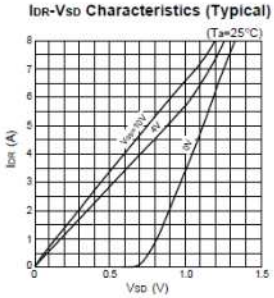

Safe Operating Area (SOA)

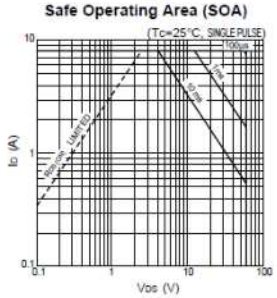

P_T-T_a Characteristics

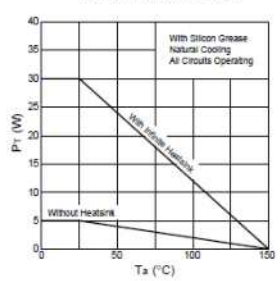

• SIP 8 (STA8Pin)

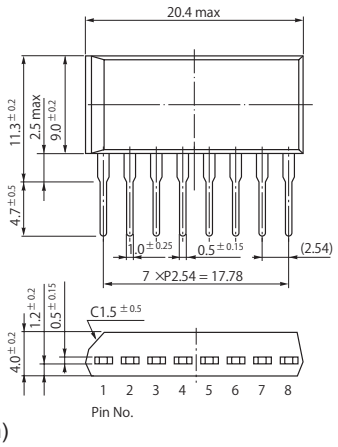

• SIP 10 (STA10Pin)

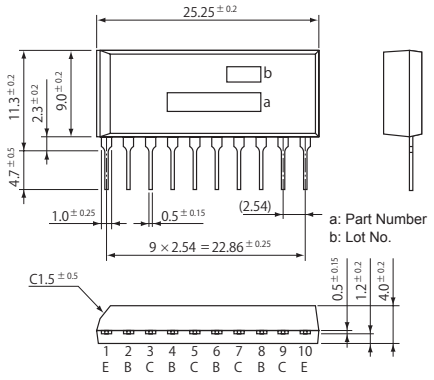

• SIP 12 (SMA12Pin)

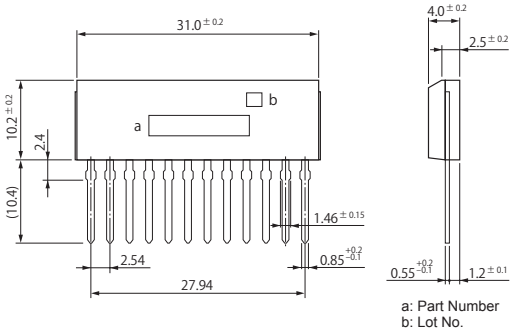

• SIP 15 (SMA15Pin)

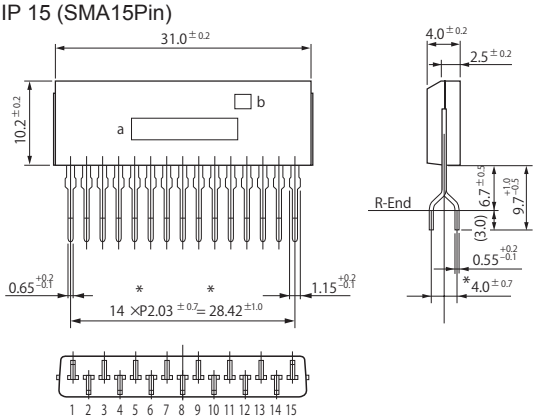

• SIP 12 with Fin (SLA12Pin)

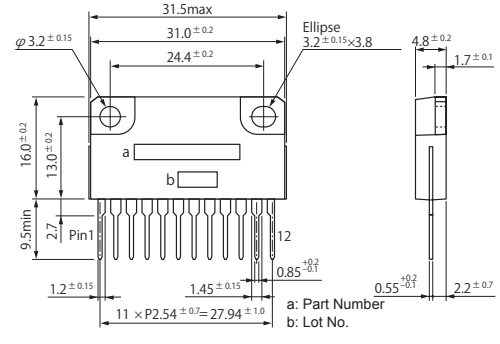

• SIP 15 with Fin (SLA15Pin)

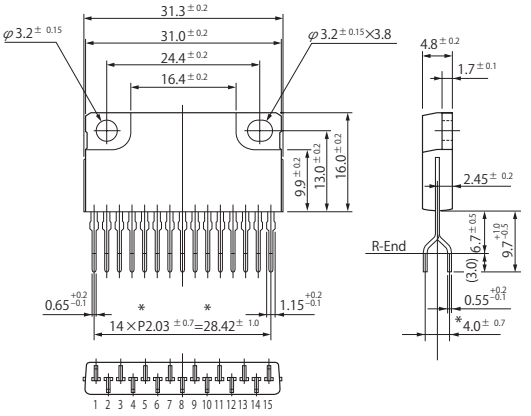

• SIP 21 with Fin (SLA21Pin)

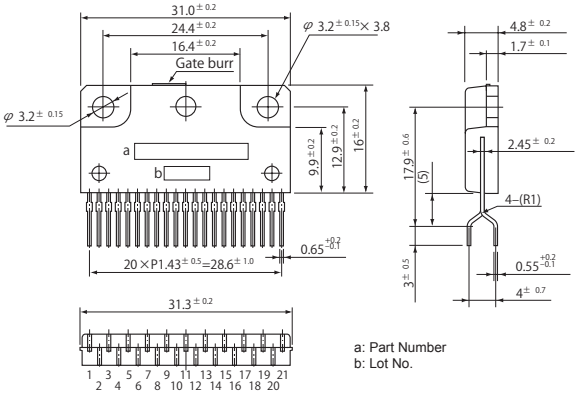

(Unit:mm)