SLA5086

P-channel
General purpose

External dimensions Ⓐ ··· SLA (12-pin)

Absolute maximum ratings (Ta=25°C)

Symbol	Ratings	Unit
V_{DSS}	–60	V
V_{GSS}	±20	V
I_D	–5	A
$I_{D(pulse)}$	–10 (PW≤1ms, duty≤25%)	A
P_T	5 (Ta=25°C, with all circuits operating, without heatsink)	W
	30 (Tc=25°C,with all circuits operating, with infinite heatsink)	W
θj-a	25 (Junction-Air, Ta=25°C, with all circuits operating)	°C/W
θj-c	4.17 (Junction-Case, Tc=25°C, with all circuits operating)	°C/W
V_{ISO}	1000 (Between fin and lead pin, AC)	Vrms
Tch	150	°C
Tstg	–40 to +150	°C

Electrical characteristics (Ta=25°C)

Symbol	Specification			Unit	Conditions
	min	typ	max		
$V_{(BR)DSS}$	–60			V	I_D=–100μA, V_{GS}=0V
I_{GSS}			±100	nA	V_{GS}=±20V
I_{DSS}			–100	μA	V_{DS}=–60V, V_{GS}=0V
V_{TH}	–1.0		–2.0	V	V_{DS}=–10V, I_D=–250μA
Re(yfs)	4	6		S	V_{DS}=–10V, I_D=–3A
$R_{DS(ON)}$		0.14	0.22	Ω	V_{GS}=–10V, I_D=–3A
Ciss		790		pF	V_{DS}=–10V,
Coss		310		pF	f=1.0MHz,
Crss		90		pF	V_{GS}=0V
td(on)		40		ns	I_D=–3A, V_{DD}≒ 20V,
tr		110		ns	R_L=6.67Ω,
td(off)		160		ns	V_{GS}=–5V,
tf		80		ns	see Fig. 4 on page 16.
V_{SD}		–1.0	–1.5	V	I_{SD}=–5A, V_{GS}=0V
trr		85		ns	I_{SD}=3A, V_{GS}=0V, di/dt=100A/μs

■Equivalent circuit diagram

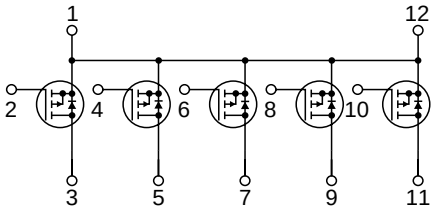

I_D-V_{DS} Characteristics (Typical)

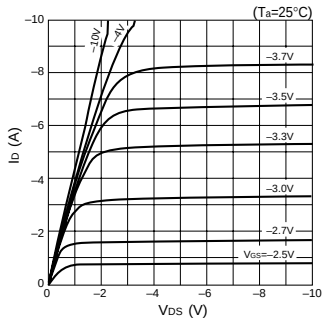

I_D-V_{GS} Characteristics (Typical)

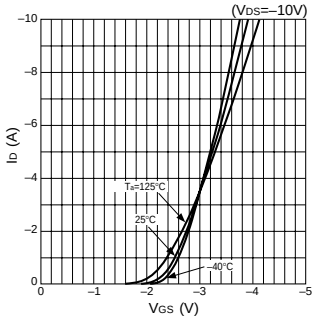

$R_{DS(ON)}$-I_D Characteristics (Typical)

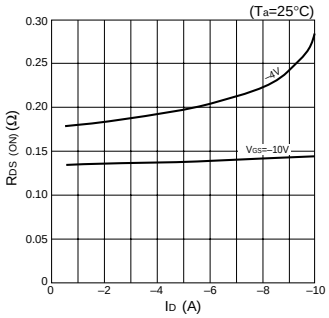

Re(yfs)-I_D Characteristics (Typical)

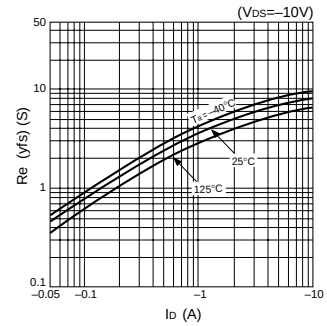

$R_{DS(ON)}$-T_C Characteristics (Typical)

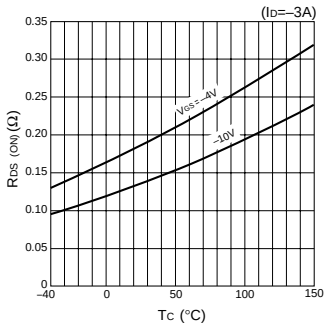

Capacitance-V_{DS} Characteristics (Typical)

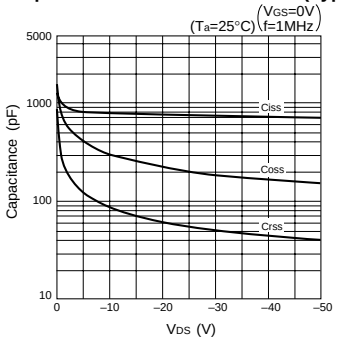

I_{DR}-V_{SD} Characteristics (Typical)

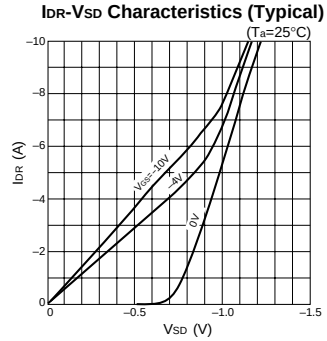

Safe Operating Area (SOA)

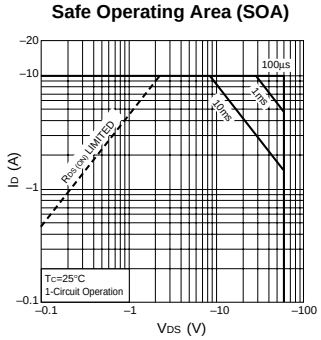

P_T-T_a Characteristics

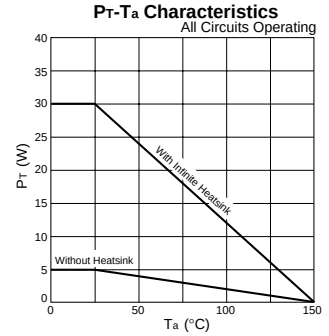

• SIP 8 (STA8Pin)

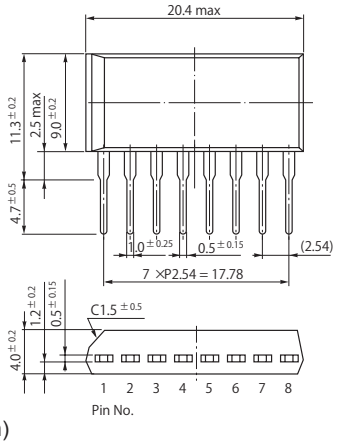

• SIP 10 (STA10Pin)

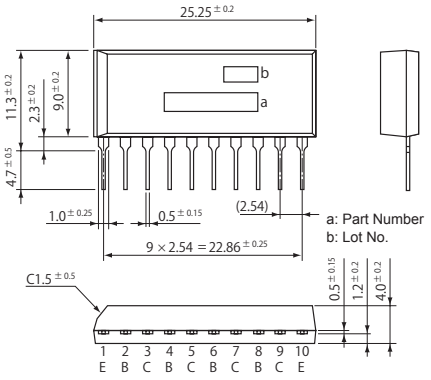

• SIP 12 (SMA12Pin)

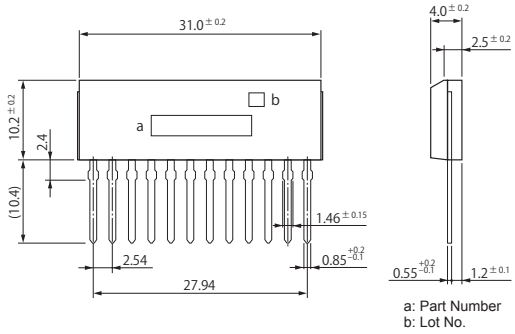

• SIP 15 (SMA15Pin)

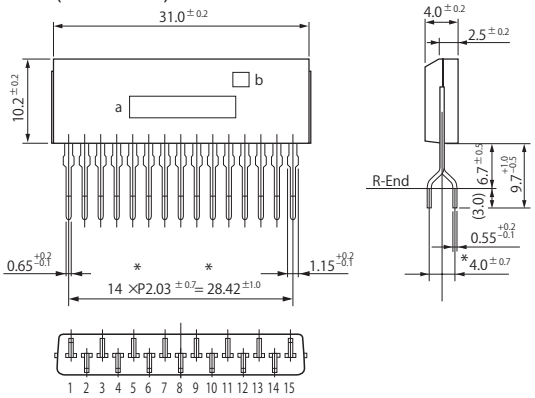

• SIP 12 with Fin (SLA12Pin)

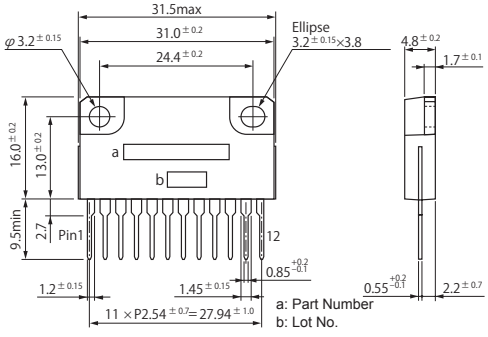

• SIP 15 with Fin (SLA15Pin)

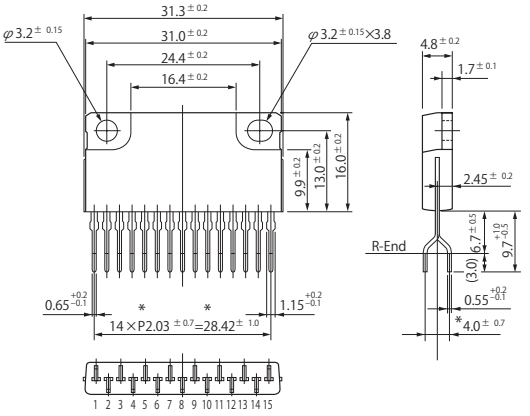

• SIP 21 with Fin (SLA21Pin)

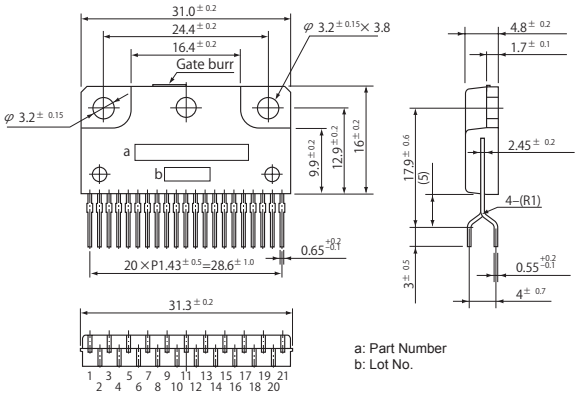

(Unit:mm)