Absolute maximum ratings

(Ta=25°C)

Symbol	Ratings		Unit
	NPN	PNP	
V_{CBO}	60	–60	V
V_{CEO}	60	–60	V
V_{EBO}	6	–6	V
I_C	4	–4	A
I_B	0.5	–0.5	A
P_T	5 (Ta=25°C)		W
	25 (Tc=25°C)		
V_{ISO}	1000 (Between fin and lead pin, AC)		V_{rms}
T_j	150		°C
T_{stg}	–40 to +150		°C
θ_{j-c}	5		°C/W

■Equivalent circuit diagram

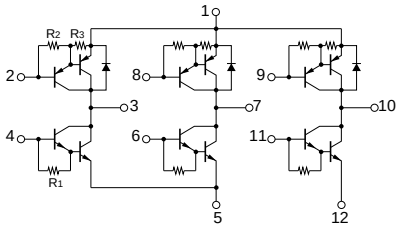

R_1: 3kΩ typ R_2: 2kΩ typ R_3: 150Ω typ

Not Recommended for New Designs

I_C-V_{CE} Characteristics (Typical)

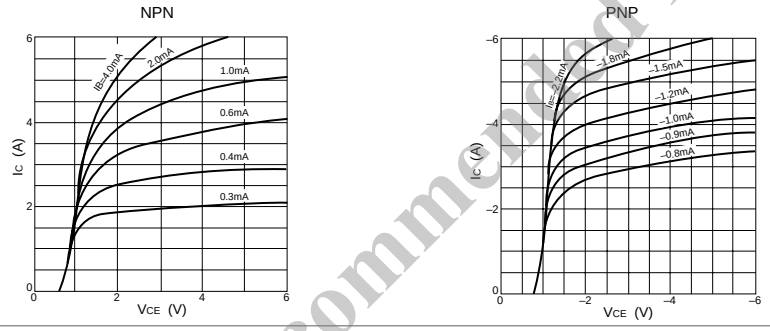

I_C-V_{BE} Temperature Characteristics (Typical)

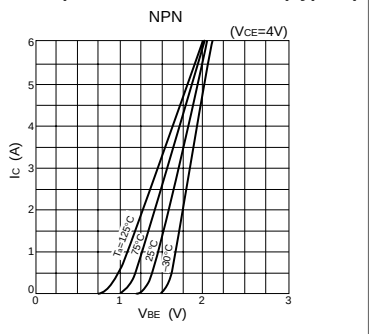

h_{FE}-I_C Characteristics (Typical)

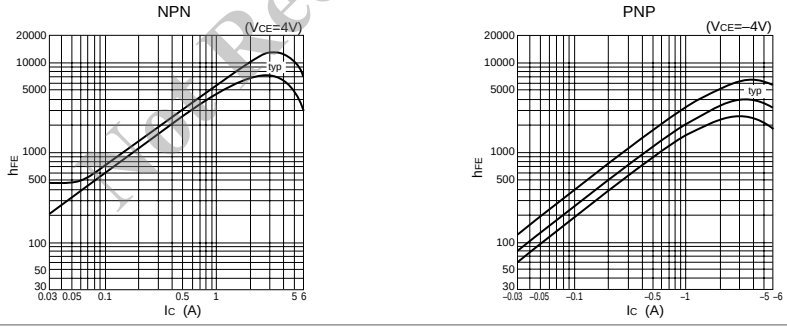

h_{FE}-I_C Temperature Characteristics (Typical)

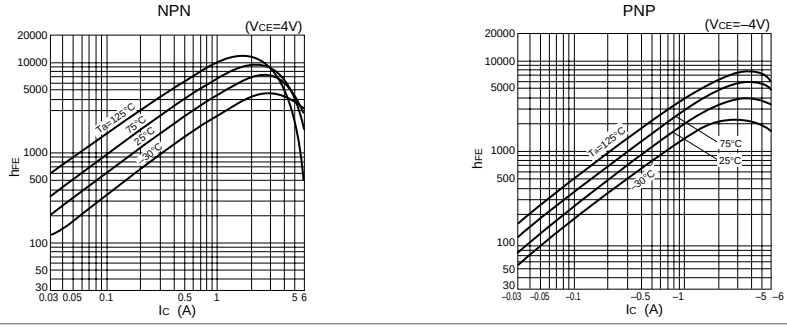

(Ta=25°C)

Symbol	NPN					PNP				
	Specification			Unit	Conditions	Specification			Unit	Conditions
	min	typ	max			min	typ	max		
I_{CBO}			10	μA	V_{CB}=60V			–10	μA	V_{CB}=–60V
I_{EBO}			10	μA	V_{EB}=6V			–10	mA	V_{EB}=–6V
V_{CEO}	60			V	I_C=10mA	–60			V	I_C=–10mA
h_{FE}	2000				V_{CE}=4V, I_C=3A	2000				V_{CE}=–4V, I_C=–3A
V_{CE}(sat)			1.5	V	I_C=3A, I_B=6mA			–1.5	V	I_C=–3A, I_B=–6mA

Not Recommended for New Designs

V_{CE}(sat)-I_B Characteristics (Typical)

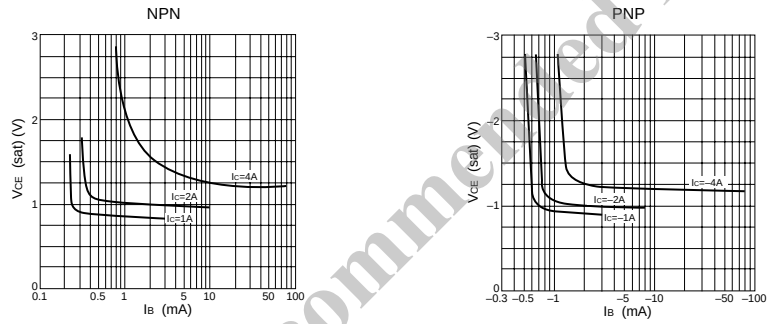

$\theta_{j\text{-}a}$-PW Characteristics

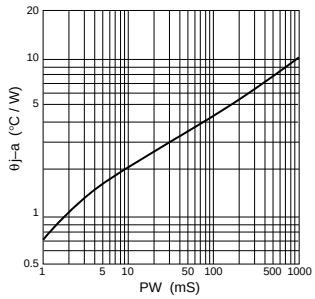

V_{CE}(sat)-I_C Temperature Characteristics (Typical)

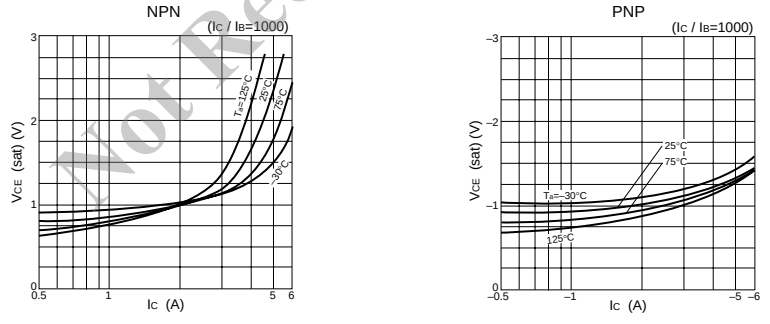

P_T-T_a Characteristics

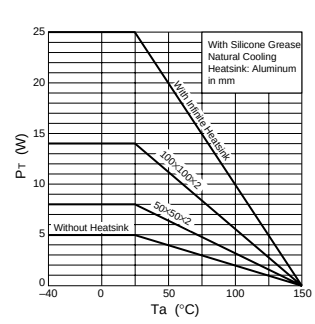

Safe Operating Area (SOA)

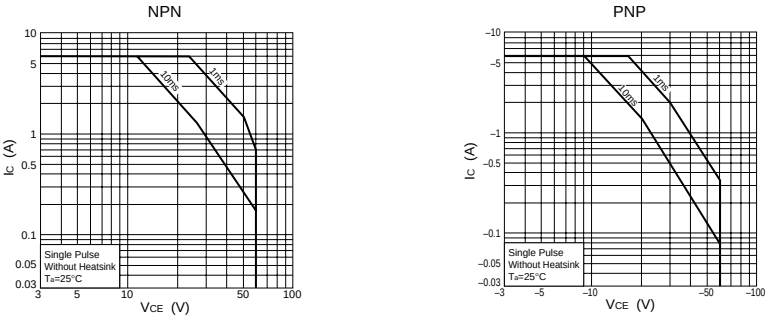

• SIP 8 (STA8Pin)

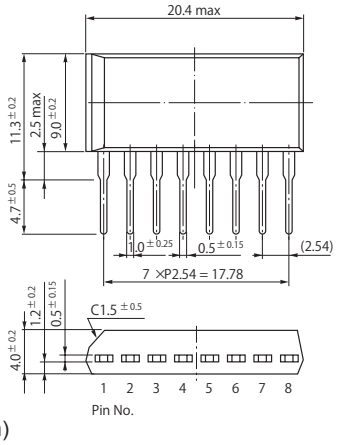

• SIP 10 (STA10Pin)

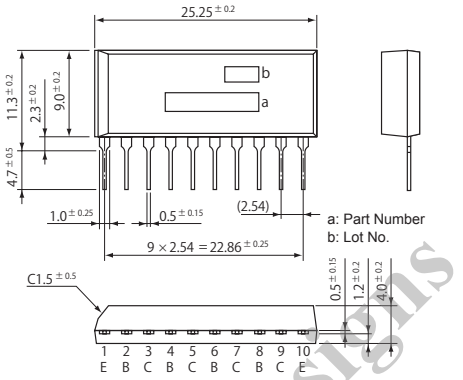

• SIP 12 (SMA12Pin)

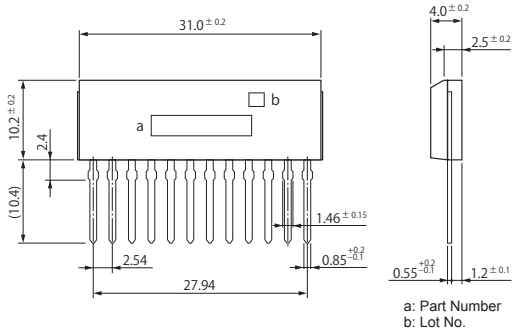

• SIP 15 (SMA15Pin)

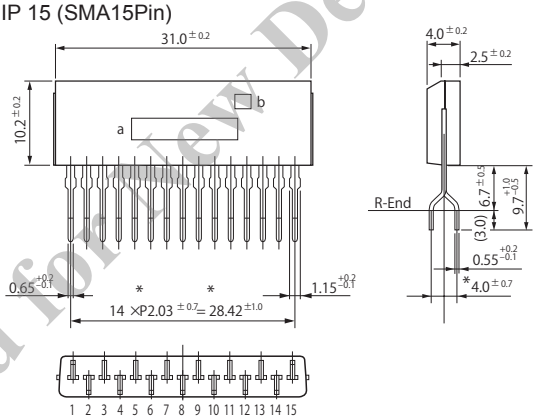

• SIP 12 with Fin (SLA12Pin)

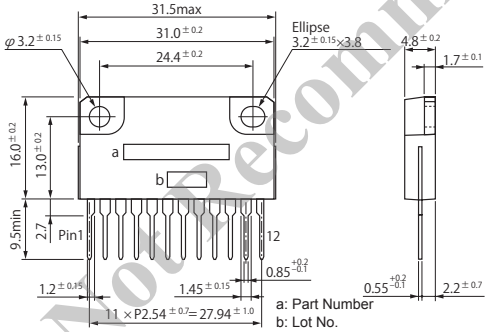

• SIP 15 with Fin (SLA15Pin)

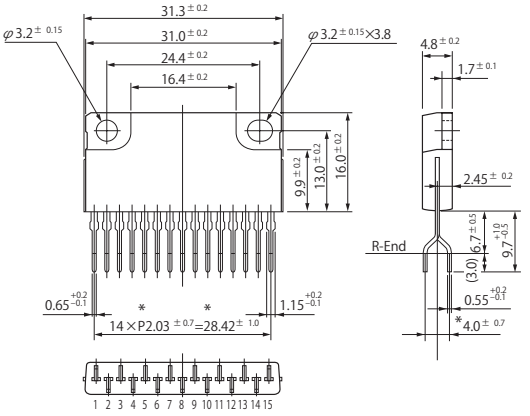

• SIP 21 with Fin (SLA21Pin)

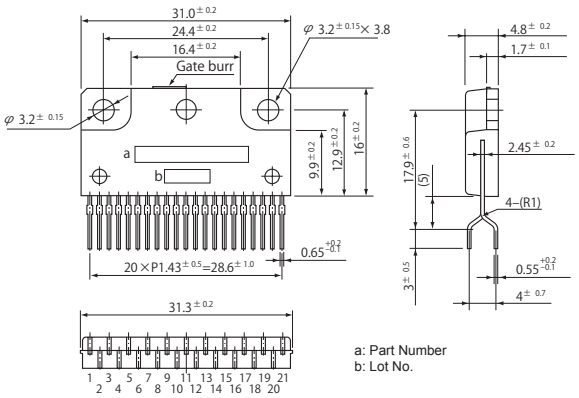

(Unit:mm)

Not Recommended for New Designs