SLLS095D – SEPTEMBER 1973 – REVISED OCTOBER 1998

- **Input Resistance . . . 3 kΩ to 7 kΩ**
- **Input Signal Range . . . ±30 V**
- **Operate From Single 5-V Supply**
- **Built-In Input Hysteresis (Double Thresholds)**
- **Response Control that Provides:**
  - **Input Threshold Shifting**
  - **Input Noise Filtering**
- **Meet or Exceed the Requirements of TIA/EIA-232-F and ITU Recommendation V.28**
- **Fully Interchangeable With Motorola™ MC1489 and MC1489A**

SN55189, SN55189A . . . J OR W PACKAGE
MC1489, MC1489A, SN75189, SN75189A
D, N, OR NS† PACKAGE
(TOP VIEW)

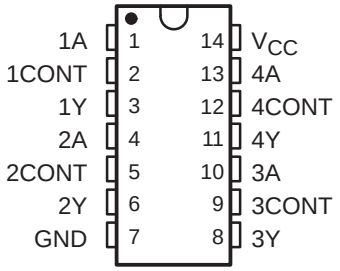

† The NS package is only available left-end taped and reeled. For SN75189, order SN75189NSR.

SN55189, SN55189A . . . FK PACKAGE
(TOP VIEW)

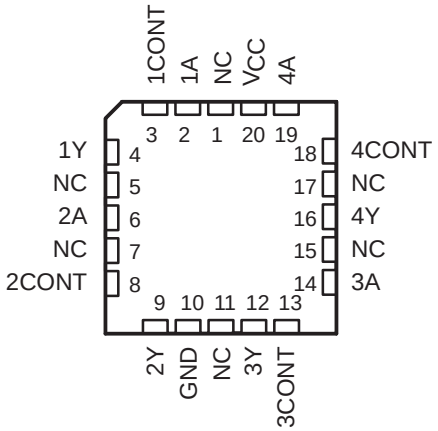

NC – No internal connection

description

These devices are monolithic low-power Schottky quadruple line receivers designed to satisfy the requirements of the standard interface between data-terminal equipment and data-communication equipment as defined by TIA/EIA-232-F. A separate response-control (CONT) terminal is provided for each receiver. A resistor or a resistor and bias-voltage source can be connected between this terminal and ground to shift the input threshold levels. An external capacitor can be connected between this terminal and ground to provide input noise filtering.

The SN55189 and SN55189A are characterized for operation over the full military temperature range of −55°C to 125°C. The MC1489, MC1489A, SN75189, and SN75189A are characterized for operation from 0°C to 70°C.

Please be aware that an important notice concerning availability, standard warranty, and use in critical applications of Texas Instruments semiconductor products and disclaimers thereto appears at the end of this data sheet.

Motorola is a trademark of Motorola, Incorporated.

PRODUCTION DATA information is current as of publication date. Products conform to specifications per the terms of Texas Instruments standard warranty. Production processing does not necessarily include testing of all parameters.

Copyright © 1998, Texas Instruments Incorporated

On products compliant to MIL-PRF-38535, all parameters are tested unless otherwise noted. On all other products, production processing does not necessarily include testing of all parameters.

logic symbol†

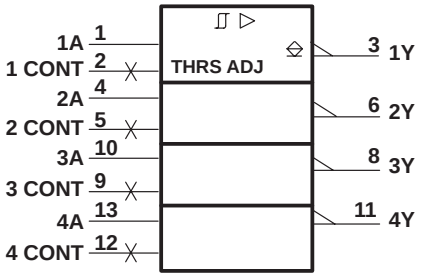

† This symbol is in accordance with ANSI/IEEE Std 91-1984 and IEC Publication 617-12.
Pin numbers shown are for the D, J, N, NS, and W packages.

logic diagram (positive logic)

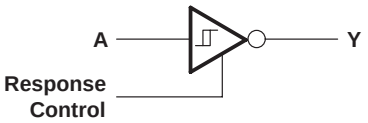

schematic (each receiver)

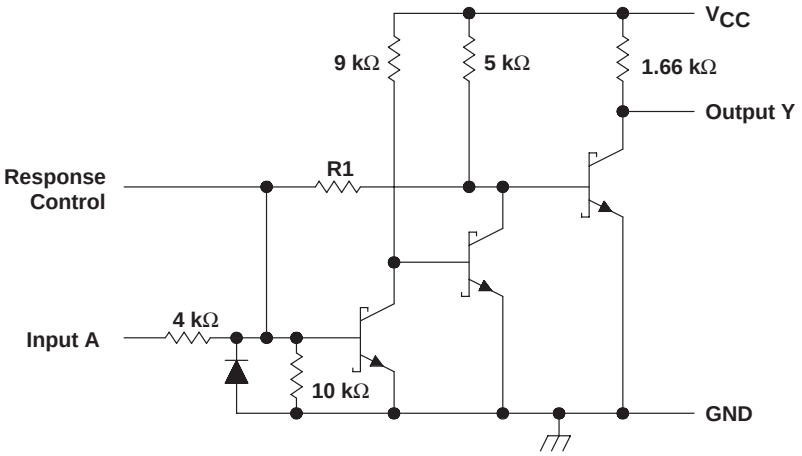

	MC1489 SN55189 SN75189	MC1489A SN55189A SN75189A
R1	8.4 kΩ	1.84 kΩ

Resistor values shown are nominal.

absolute maximum ratings over operating free-air temperature (unless otherwise noted)†

Supply voltage, V_{CC} (see Note 1) . . . . . 10 V
Input voltage, V_I . . . . . ±30 V
Output voltage, I_O . . . . . 20 mA
Continuous total power dissipation . . . . . See Dissipation Rating Table
Operating free-air temperature range, T_A: SN55189, SN55189A . . . . . –55°C to 125°C
MC1489, MC1489A, SN75189, SN75189A . . . . . 0°C to 70°C
Storage temperature range, T_{stg} . . . . . –65°C to 150°C
Case temperature for 60 seconds, FK package . . . . . 260°C
Lead temperature 1,6 mm (1/16 inch) from case for 60 seconds: J or W package . . . . . 300°C
Lead temperature 1,6 mm (1/16 inch) from case for 10 seconds: D, N, or NS package . . . . . 260°C

† Stresses beyond those listed under "absolute maximum ratings" may cause permanent damage to the device. These are stress ratings only, and functional operation of the device at these or any other conditions beyond those indicated under "recommended operating conditions" is not implied. Exposure to absolute-maximum-rated conditions for extended periods may affect device reliability.

NOTES: 1. All voltage values are with respect to the network ground terminal.

DISSIPATION RATING TABLE

PACKAGE	$T_A \leq 25°C$ POWER RATING	DERATING FACTOR ABOVE $T_A = 25°C$	$T_A = 70°C$ POWER RATING	$T_A = 125°C$ POWER RATING
D	950 mW	7.6 mW/°C	608 mW	N/A
FK	1375 mW	11.0 mW/°C	880 mW	275 mW
J‡	1375 mW	11.0 mW/°C	880 mW	275 mW
N	1150 mW	9.2 mW/°C	736 mW	N/A
NS	625 mW	4.0 mW/°C	445 mW	N/A
W	1000 mW	8.0 mW/°C	640 mW	200 mW

‡ In the J package, SN55189 and SN55189A chips are either silver glass or alloy mounted.

recommended operating conditions

	MIN	NOM	MAX	UNIT
Supply voltage, V_{CC}	4.5	5	5.5	V
Input voltage, V_I	–25		25	V
High-level output current, I_{OH}			–0.5	mA
Low-level output current, I_{OL}			10	mA
Operating free-air temperature, T_A	0		70	°C

electrical characteristics over operating free-air temperature range, V_{CC} = 5 V ± 1% (unless otherwise noted)

PARAMETER		TEST FIGURE	TEST CONDITIONS†		SN55189 SN55189A			MC1489, MC1489A SN75189 SN75189A			UNIT
					MIN	TYP‡	MAX	MIN	TYP‡	MAX	
V_{IT+}	Positive-going input threshold voltage	1	'89	T_A = 25°C	1	1.3	1.5	1	1.3	1.5	V
				T_A = 0°C to 70°C				0.9		1.6	
				T_A = –55°C to 125°C	0.6		1.9				
			'89A	T_A = 25°C	1.75	1.9	2.25	1.75	1.9	2.25	
				T_A = 0°C to 70°C				1.55		2.25	
				T_A = –55°C to 125°C	1.30		2.65				
V_{IT-}	Negative-going input threshold voltage	1	'89, '89A	T_A = 25°C	0.75	1.0	1.25	0.75	1.0	1.25	V
				T_A = 0°C to 70°C				0.65		1.25	
				T_A = –55°C to 125°C	0.35		1.6				
V_{OH}	High-level output voltage	1	V_I = 0.75 V,	I_{OH} = –0.5 mA	2.6	4	5	2.6	4	5	V
			Input open,	I_{OH} = –0.5 mA	2.6	4	5	2.6	4	5	
V_{OL}	Low-level output voltage	1	V_I = 3 V,	I_{OL} = 10 mA		0.2	0.45		0.2	0.45	V
I_{IH}	High-level input current	2	V_I = 25 V		3.6		8.3	3.6		8.3	mA
			V_I = 3 V		0.43			0.43			
I_{IL}	Low-level input current	2	V_I = –25 V		–3.6		–8.3	–3.6		–8.3	mA
			V_I = –3 V		–0.43			–0.43			
I_{OS}	Short-circuit output current	3				–3			–3		mA
I_{CC}	Supply current	2	V_I = 5 V,	Outputs open		20	26		20	26	mA

† All characteristics are measured with the response-control terminal open.
‡ All typical values are at V_{CC} = 5 V, T_A = 25°C.

switching characteristics, V_{CC} = 5 V, C_L = 15 pF, T_A = 25°C

PARAMETER		TEST FIGURE	TEST CONDITIONS	MIN	TYP	MAX	UNIT
t_{PLH}	Propagation delay time, low- to high-level output	4	R_L = 3.9 kΩ		25	85	ns
t_{PHL}	Propagation delay time, high- to low-level output		R_L = 390 Ω		25	50	
t_{TLH}	Transition time, low- to high-level output		R_L = 3.9 kΩ		120	175	ns
t_{THL}	Transition time, high- to low-level output		R_L = 390 Ω		10	20	

PARAMETER MEASUREMENT INFORMATION†

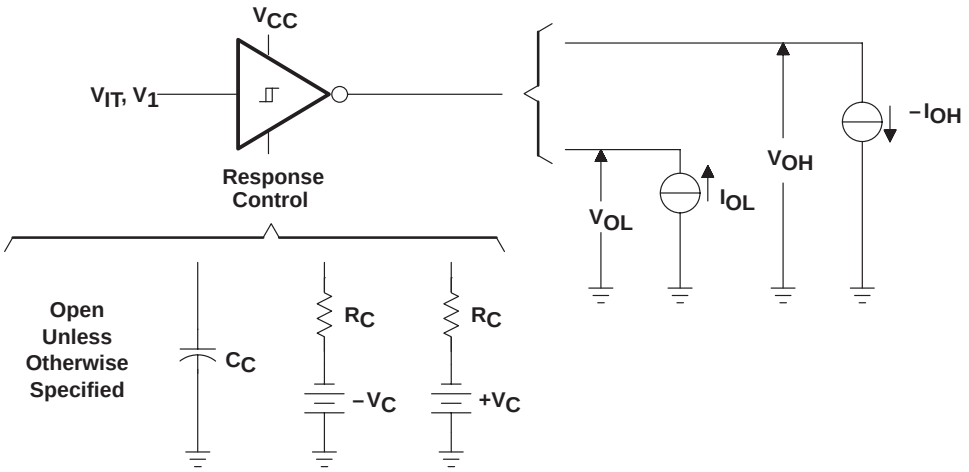

Figure 1. V_{IT+} , V_{IT-} , V_{OH} , V_{OL}

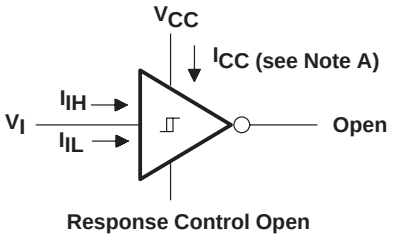

NOTE A: I_{CC} is tested for all four receivers simultaneously.

Figure 2. I_{IH} , I_{IL} , I_{CC}

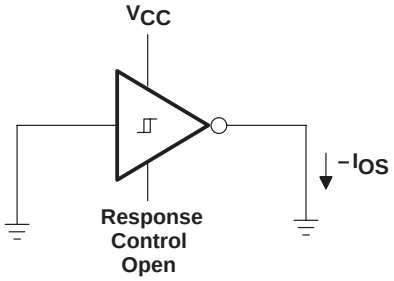

Figure 3. I_{OS}

† Arrows indicate actual direction of current flow. Current into a terminal is a positive value.

PARAMETER MEASUREMENT INFORMATION

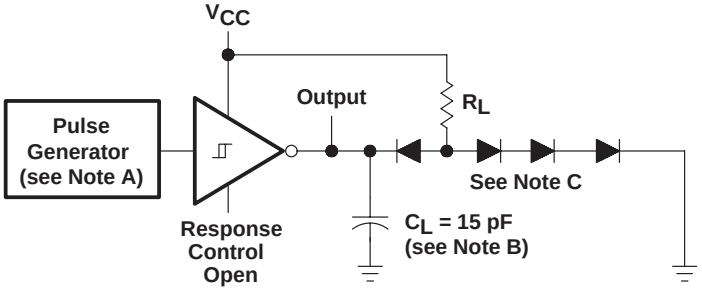

TEST CIRCUIT

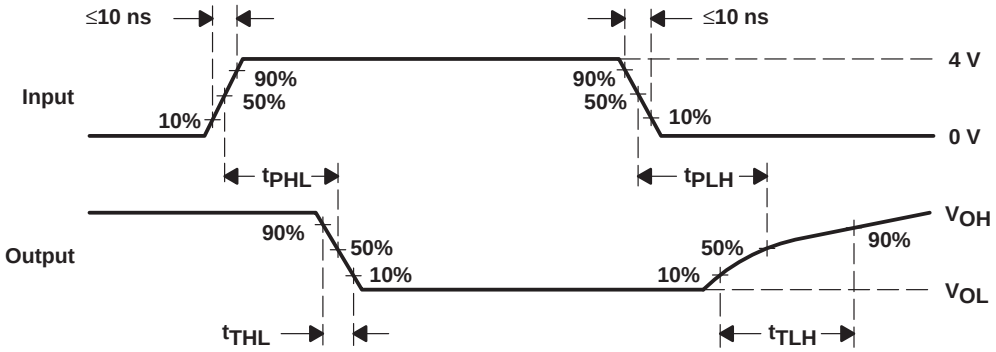

VOLTAGE WAVEFORMS

NOTES: A. The pulse generator has the following characteristics: Z_O = 50 Ω, t_W = 500 ns.
B. C_L includes probe and jig capacitances.
C. All diodes are 1N3064 or equivalent.

Figure 4. Test Circuit and Voltage Waveforms

TYPICAL CHARACTERISTICS

SN65189, SN75189
OUTPUT VOLTAGE
vs
INPUT VOLTAGE

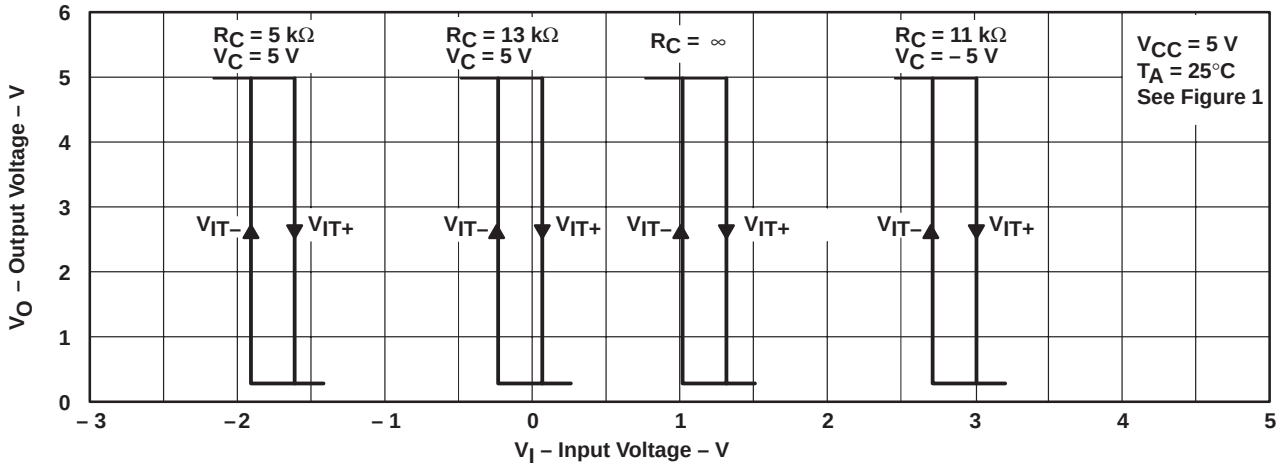

Figure 5

SN65189A, SN75189A
OUTPUT VOLTAGE
vs
INPUT VOLTAGE

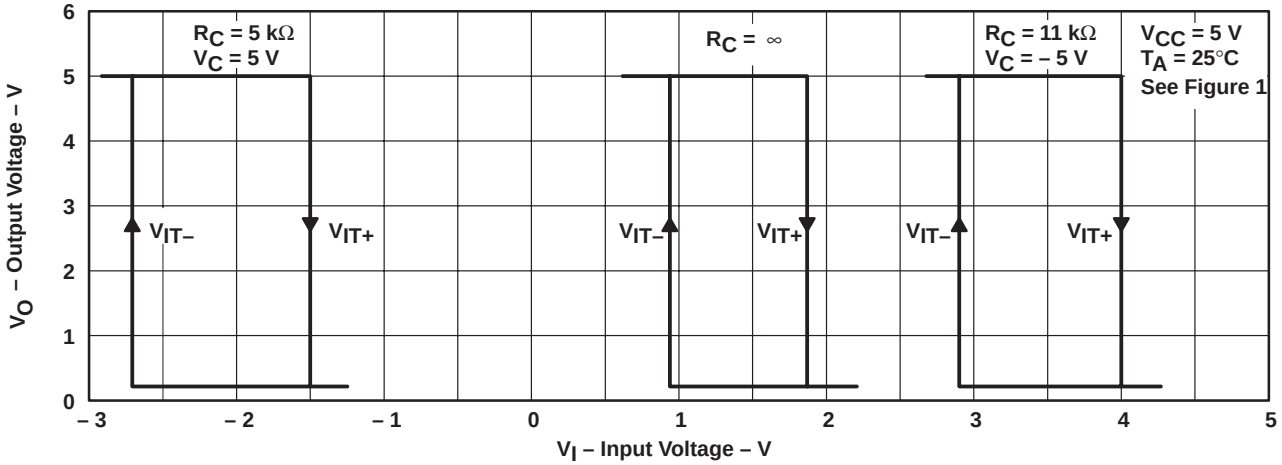

Figure 6

TYPICAL CHARACTERISTICS†

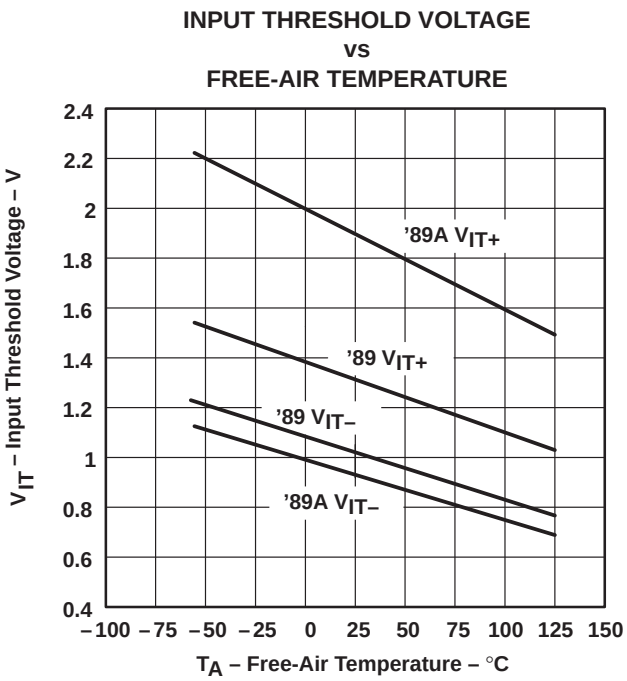

Figure 7

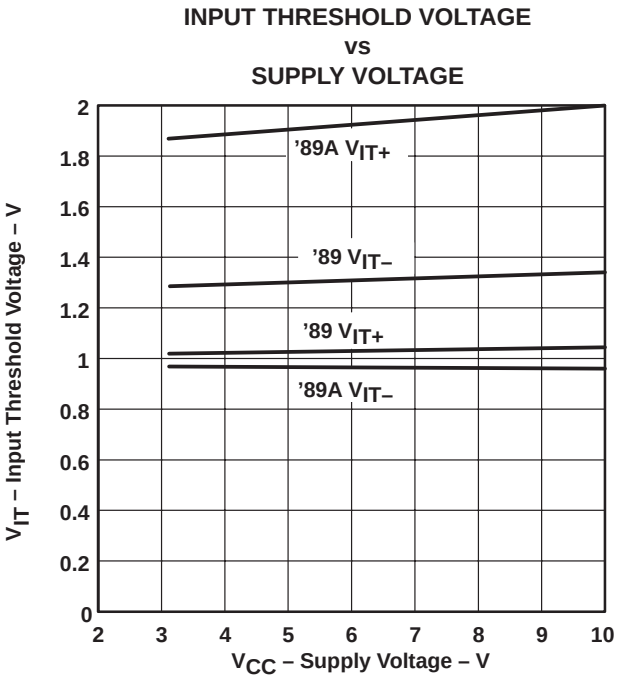

Figure 8

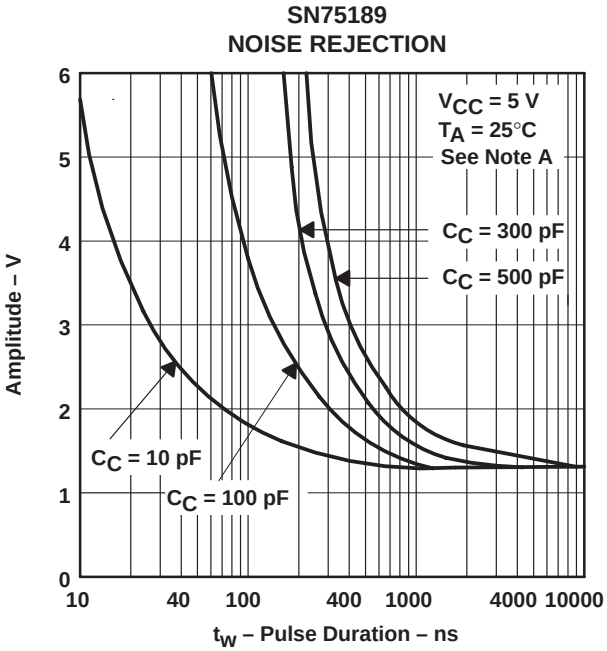

NOTE A: Maximum amplitude of a positive-going pulse that, starting from 0 V, will not cause a change in the output level.

Figure 9

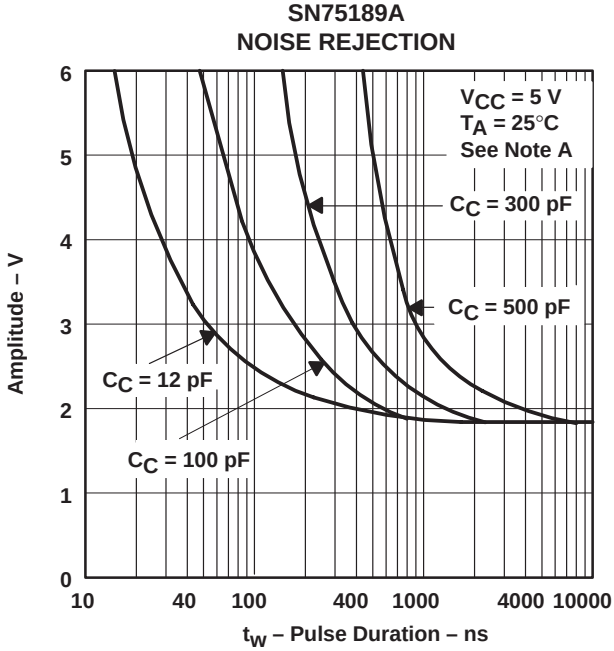

NOTE A: Maximum amplitude of a positive-going pulse that, starting from 0 V, will not cause a change in the output level.

Figure 10

† Data for free-air temperatures below 0°C and above 70°C are applicable to SN55189 and SN55189A circuits only.

TYPICAL CHARACTERISTICS

INPUT CURRENT
vs
INPUT VOLTAGE

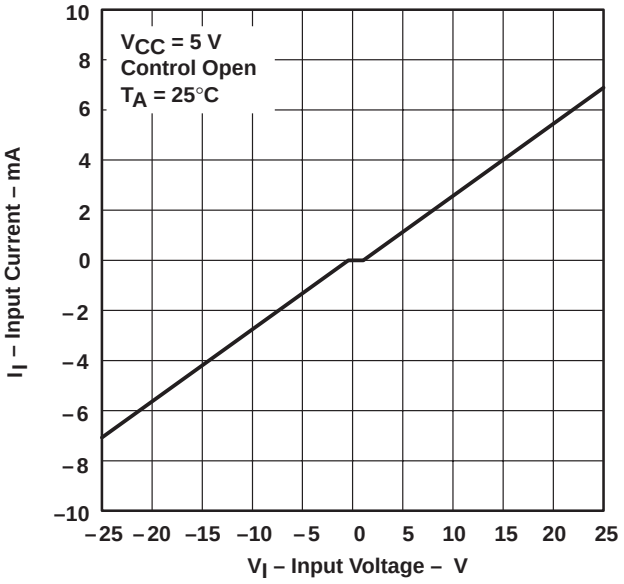

Figure 11

PACKAGING INFORMATION

Orderable part number	Status (1)	Material type (2)	Package | Pins	Package qty | Carrier	RoHS (3)	Lead finish/ Ball material (4)	MSL rating/ Peak reflow (5)	Op temp (°C)	Part marking (6)
5962-86888022A	Active	Production	LCCC (FK) | 20	55 | TUBE	No	SNPB	N/A for Pkg Type	-55 to 125	5962-86888022A SNJ55189AFK
5962-8688802CA	Active	Production	CDIP (J) | 14	25 | TUBE	No	SNPB	N/A for Pkg Type	-55 to 125	5962-8688802CA SNJ55189AJ
5962-8688802DA	Active	Production	CFP (W) | 14	25 | TUBE	No	SNPB	N/A for Pkg Type	-55 to 125	5962-8688802DA SNJ55189AW
MC1489AN	Obsolete	Production	PDIP (N) | 14	-	-	Call TI	Call TI	0 to 70	MC1489AN
MC1489N	Obsolete	Production	PDIP (N) | 14	-	-	Call TI	Call TI	0 to 70	MC1489N
SN55189AJ	Active	Production	CDIP (J) | 14	25 | TUBE	No	SNPB	N/A for Pkg Type	-55 to 125	SN55189AJ
SN55189AJ.A	Active	Production	CDIP (J) | 14	25 | TUBE	No	SNPB	N/A for Pkg Type	-55 to 125	SN55189AJ
SN75189AD	Active	Production	SOIC (D) | 14	50 | TUBE	Yes	NIPDAU	Level-1-260C-UNLIM	0 to 70	SN75189A
SN75189AD.A	Active	Production	SOIC (D) | 14	50 | TUBE	Yes	NIPDAU	Level-1-260C-UNLIM	0 to 70	SN75189A
SN75189ADR	Active	Production	SOIC (D) | 14	2500 | LARGE T&R	Yes	NIPDAU	Level-1-260C-UNLIM	0 to 70	SN75189A
SN75189ADR.A	Active	Production	SOIC (D) | 14	2500 | LARGE T&R	Yes	NIPDAU	Level-1-260C-UNLIM	0 to 70	SN75189A
SN75189ADRG4	Active	Production	SOIC (D) | 14	2500 | LARGE T&R	Yes	NIPDAU	Level-1-260C-UNLIM	0 to 70	SN75189A
SN75189AN	Active	Production	PDIP (N) | 14	25 | TUBE	Yes	NIPDAU	N/A for Pkg Type	0 to 70	SN75189AN
SN75189AN.A	Active	Production	PDIP (N) | 14	25 | TUBE	Yes	NIPDAU	N/A for Pkg Type	0 to 70	SN75189AN
SN75189ANSR	Active	Production	SOP (NS) | 14	2000 | LARGE T&R	Yes	NIPDAU	Level-1-260C-UNLIM	0 to 70	SN75189A
SN75189ANSR.A	Active	Production	SOP (NS) | 14	2000 | LARGE T&R	Yes	NIPDAU	Level-1-260C-UNLIM	0 to 70	SN75189A
SN75189ANSRG4	Active	Production	SOP (NS) | 14	2000 | LARGE T&R	Yes	NIPDAU	Level-1-260C-UNLIM	0 to 70	SN75189A
SN75189APWR	Active	Production	TSSOP (PW) | 14	2000 | LARGE T&R	Yes	NIPDAU	Level-1-260C-UNLIM	-	A189A
SN75189APWR.A	Active	Production	TSSOP (PW) | 14	2000 | LARGE T&R	Yes	NIPDAU	Level-1-260C-UNLIM	0 to 70	A189A
SN75189D	Active	Production	SOIC (D) | 14	50 | TUBE	Yes	NIPDAU	Level-1-260C-UNLIM	0 to 70	SN75189
SN75189D.A	Active	Production	SOIC (D) | 14	50 | TUBE	Yes	NIPDAU	Level-1-260C-UNLIM	0 to 70	SN75189
SN75189DR	Active	Production	SOIC (D) | 14	2500 | LARGE T&R	Yes	NIPDAU	Level-1-260C-UNLIM	0 to 70	SN75189
SN75189DR.A	Active	Production	SOIC (D) | 14	2500 | LARGE T&R	Yes	NIPDAU	Level-1-260C-UNLIM	0 to 70	SN75189
SN75189N	Active	Production	PDIP (N) | 14	25 | TUBE	Yes	NIPDAU	N/A for Pkg Type	0 to 70	SN75189N
SN75189N.A	Active	Production	PDIP (N) | 14	25 | TUBE	Yes	NIPDAU	N/A for Pkg Type	0 to 70	SN75189N

Orderable part number	Status (1)	Material type (2)	Package | Pins	Package qty | Carrier	RoHS (3)	Lead finish/ Ball material (4)	MSL rating/ Peak reflow (5)	Op temp (°C)	Part marking (6)
SN75189NSR	Active	Production	SOP (NS) | 14	2000 | LARGE T&R	Yes	NIPDAU	Level-1-260C-UNLIM	0 to 70	SN75189
SN75189NSR.A	Active	Production	SOP (NS) | 14	2000 | LARGE T&R	Yes	NIPDAU	Level-1-260C-UNLIM	0 to 70	SN75189
SNJ55189AFK	Active	Production	LCCC (FK) | 20	55 | TUBE	No	SNPB	N/A for Pkg Type	-55 to 125	5962-86888022A SNJ55 189AFK
SNJ55189AFK.A	Active	Production	LCCC (FK) | 20	55 | TUBE	No	SNPB	N/A for Pkg Type	-55 to 125	5962-86888022A SNJ55 189AFK
SNJ55189AJ	Active	Production	CDIP (J) | 14	25 | TUBE	No	SNPB	N/A for Pkg Type	-55 to 125	5962-8688802CA SNJ55189AJ
SNJ55189AJ.A	Active	Production	CDIP (J) | 14	25 | TUBE	No	SNPB	N/A for Pkg Type	-55 to 125	5962-8688802CA SNJ55189AJ
SNJ55189AW	Active	Production	CFP (W) | 14	25 | TUBE	No	SNPB	N/A for Pkg Type	-55 to 125	5962-8688802DA SNJ55189AW
SNJ55189AW.A	Active	Production	CFP (W) | 14	25 | TUBE	No	SNPB	N/A for Pkg Type	-55 to 125	5962-8688802DA SNJ55189AW

(1) **Status:** For more details on status, see our product life cycle.

(2) **Material type:** When designated, preproduction parts are prototypes/experimental devices, and are not yet approved or released for full production. Testing and final process, including without limitation quality assurance, reliability performance testing, and/or process qualification, may not yet be complete, and this item is subject to further changes or possible discontinuation. If available for ordering, purchases will be subject to an additional waiver at checkout, and are intended for early internal evaluation purposes only. These items are sold without warranties of any kind.

(3) **RoHS values:** Yes, No, RoHS Exempt. See the TI RoHS Statement for additional information and value definition.

(4) **Lead finish/Ball material:** Parts may have multiple material finish options. Finish options are separated by a vertical ruled line. Lead finish/Ball material values may wrap to two lines if the finish value exceeds the maximum column width.

(5) **MSL rating/Peak reflow:** The moisture sensitivity level ratings and peak solder (reflow) temperatures. In the event that a part has multiple moisture sensitivity ratings, only the lowest level per JEDEC standards is shown. Refer to the shipping label for the actual reflow temperature that will be used to mount the part to the printed circuit board.

(6) **Part marking:** There may be an additional marking, which relates to the logo, the lot trace code information, or the environmental category of the part.

Multiple part markings will be inside parentheses. Only one part marking contained in parentheses and separated by a "~" will appear on a part. If a line is indented then it is a continuation of the previous line and the two combined represent the entire part marking for that device.

Important Information and Disclaimer: The information provided on this page represents TI's knowledge and belief as of the date that it is provided. TI bases its knowledge and belief on information provided by third parties, and makes no representation or warranty as to the accuracy of such information. Efforts are underway to better integrate information from third parties. TI has taken and continues to take reasonable steps to provide representative and accurate information but may not have conducted destructive testing or chemical analysis on incoming materials and chemicals. TI and TI suppliers consider certain information to be proprietary, and thus CAS numbers and other limited information may not be available for release.

In no event shall TI's liability arising out of such information exceed the total purchase price of the TI part(s) at issue in this document sold by TI to Customer on an annual basis.

OTHER QUALIFIED VERSIONS OF SN55189A, SN75189A :

- Catalog : SN75189A
- Military : SN55189A

NOTE: Qualified Version Definitions:

- Catalog - TI's standard catalog product
- Military - QML certified for Military and Defense Applications

TAPE AND REEL INFORMATION

REEL DIMENSIONS

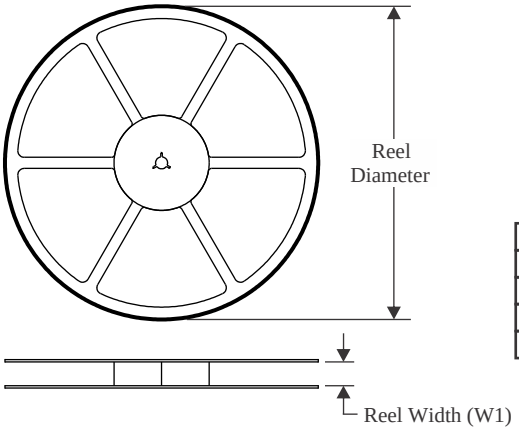

TAPE DIMENSIONS

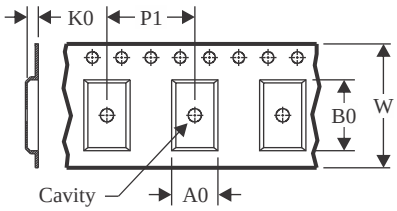

A0	Dimension designed to accommodate the component width
B0	Dimension designed to accommodate the component length
K0	Dimension designed to accommodate the component thickness
W	Overall width of the carrier tape
P1	Pitch between successive cavity centers

QUADRANT ASSIGNMENTS FOR PIN 1 ORIENTATION IN TAPE

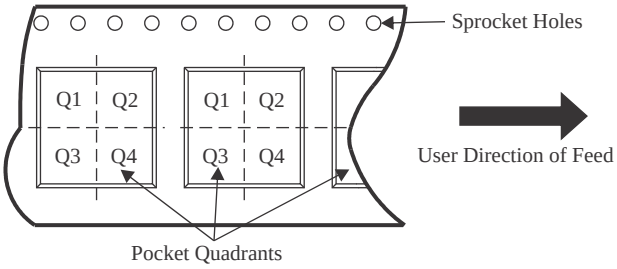

*All dimensions are nominal

Device	Package Type	Package Drawing	Pins	SPQ	Reel Diameter (mm)	Reel Width W1 (mm)	A0 (mm)	B0 (mm)	K0 (mm)	P1 (mm)	W (mm)	Pin1 Quadrant
SN75189ADR	SOIC	D	14	2500	330.0	16.4	6.5	9.0	2.1	8.0	16.0	Q1
SN75189ANSR	SOP	NS	14	2000	330.0	16.4	8.1	10.4	2.5	12.0	16.0	Q1
SN75189APWR	TSSOP	PW	14	2000	330.0	12.4	6.9	5.6	1.6	8.0	12.0	Q1
SN75189DR	SOIC	D	14	2500	330.0	16.4	6.5	9.0	2.1	8.0	16.0	Q1
SN75189NSR	SOP	NS	14	2000	330.0	16.4	8.1	10.4	2.5	12.0	16.0	Q1

TAPE AND REEL BOX DIMENSIONS

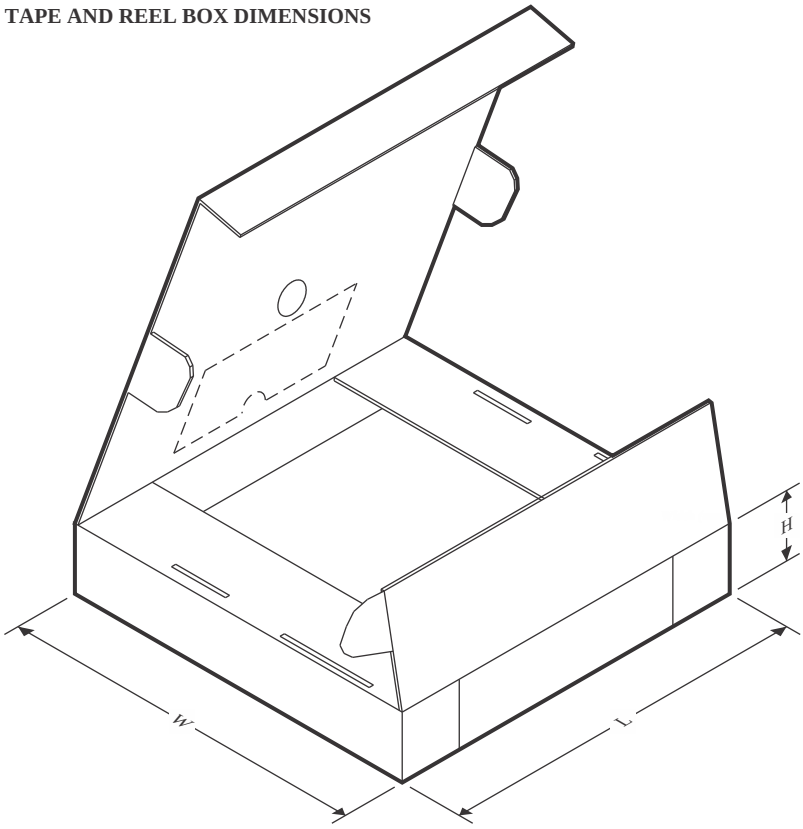

*All dimensions are nominal

Device	Package Type	Package Drawing	Pins	SPQ	Length (mm)	Width (mm)	Height (mm)
SN75189ADR	SOIC	D	14	2500	353.0	353.0	32.0
SN75189ANSR	SOP	NS	14	2000	353.0	353.0	32.0
SN75189APWR	TSSOP	PW	14	2000	353.0	353.0	32.0
SN75189DR	SOIC	D	14	2500	353.0	353.0	32.0
SN75189NSR	SOP	NS	14	2000	353.0	353.0	32.0

TUBE

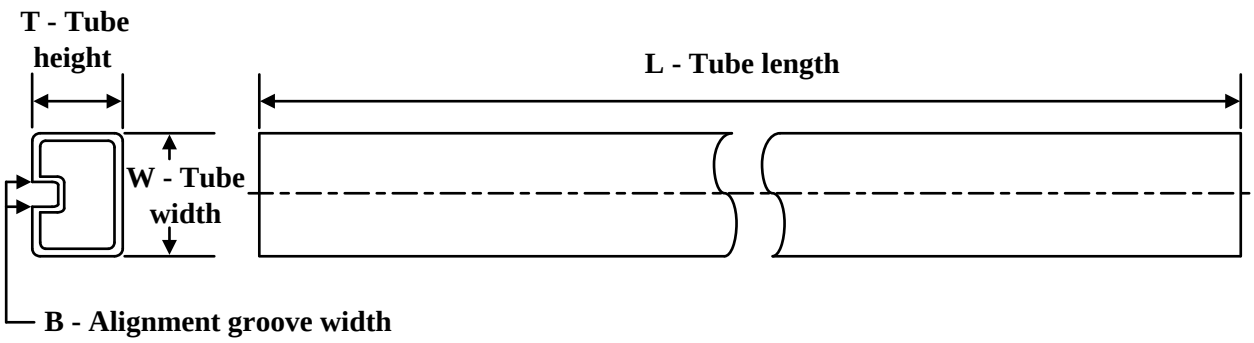

*All dimensions are nominal

Device	Package Name	Package Type	Pins	SPQ	L (mm)	W (mm)	T (µm)	B (mm)
5962-86888022A	FK	LCCC	20	55	506.98	12.06	2030	NA
5962-8688802DA	W	CFP	14	25	506.98	26.16	6220	NA
SN75189AD	D	SOIC	14	50	507	8	3940	4.32
SN75189AD	D	SOIC	14	50	506.6	8	3940	4.32
SN75189AD.A	D	SOIC	14	50	507	8	3940	4.32
SN75189AD.A	D	SOIC	14	50	506.6	8	3940	4.32
SN75189AN	N	PDIP	14	25	506	13.97	11230	4.32
SN75189AN	N	PDIP	14	25	506	13.97	11230	4.32
SN75189AN.A	N	PDIP	14	25	506	13.97	11230	4.32
SN75189AN.A	N	PDIP	14	25	506	13.97	11230	4.32
SN75189D	D	SOIC	14	50	506.6	8	3940	4.32
SN75189D.A	D	SOIC	14	50	506.6	8	3940	4.32
SN75189N	N	PDIP	14	25	506	13.97	11230	4.32
SN75189N.A	N	PDIP	14	25	506	13.97	11230	4.32
SNJ55189AFK	FK	LCCC	20	55	506.98	12.06	2030	NA
SNJ55189AFK.A	FK	LCCC	20	55	506.98	12.06	2030	NA
SNJ55189AW	W	CFP	14	25	506.98	26.16	6220	NA
SNJ55189AW.A	W	CFP	14	25	506.98	26.16	6220	NA

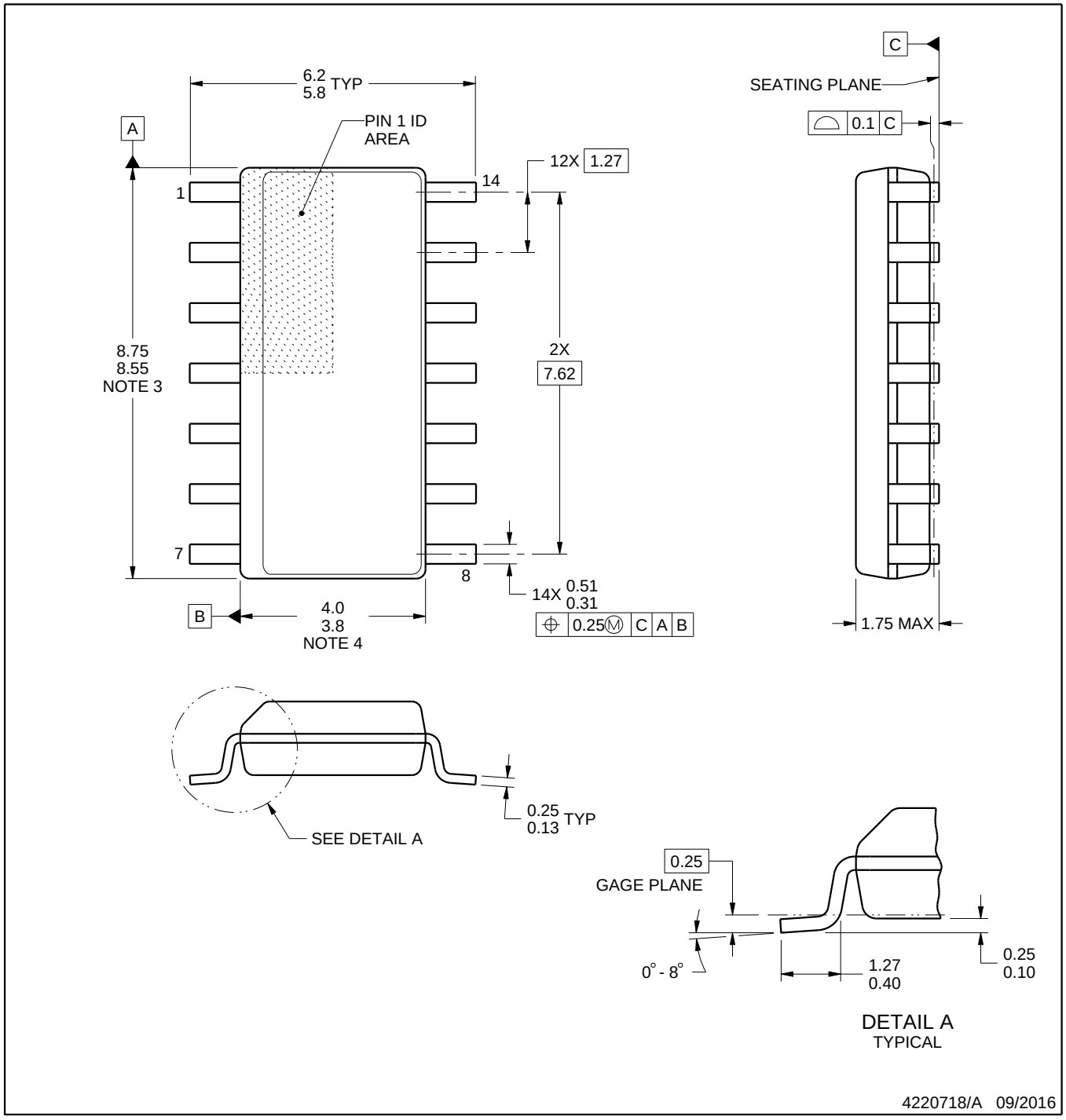

NOTES:

1. All linear dimensions are in millimeters. Dimensions in parenthesis are for reference only. Dimensioning and tolerancing per ASME Y14.5M.
2. This drawing is subject to change without notice.
3. This dimension does not include mold flash, protrusions, or gate burrs. Mold flash, protrusions, or gate burrs shall not exceed 0.15 mm, per side.
4. This dimension does not include interlead flash. Interlead flash shall not exceed 0.43 mm, per side.
5. Reference JEDEC registration MS-012, variation AB.

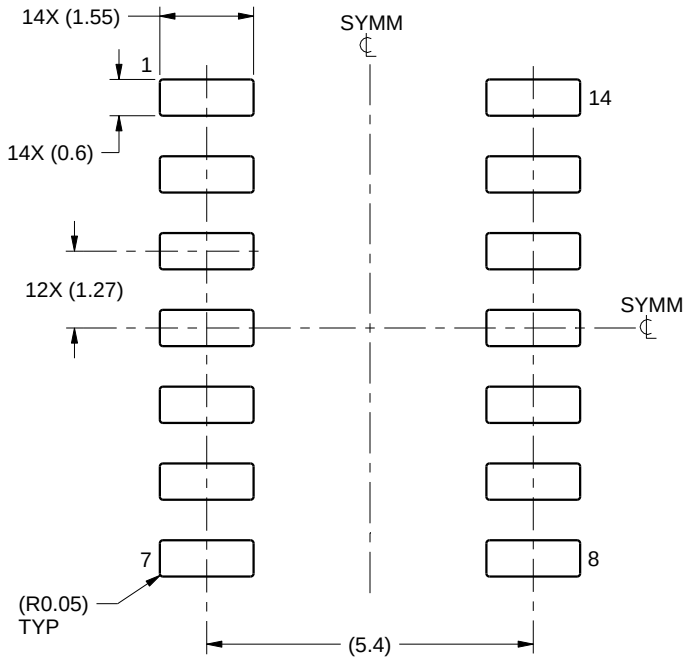

LAND PATTERN EXAMPLE
SCALE:8X

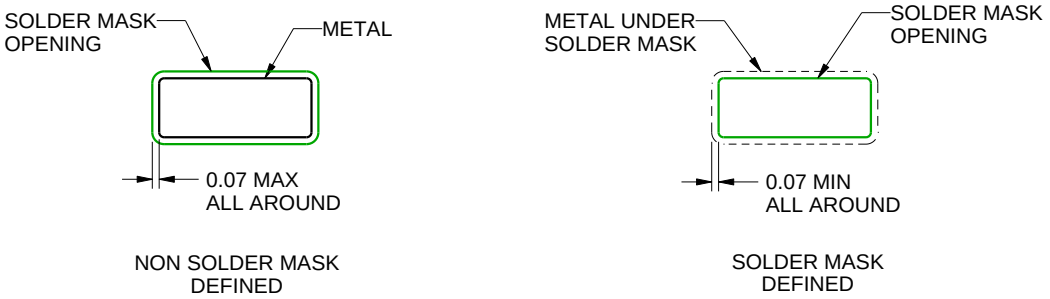

SOLDER MASK DETAILS

4220718/A 09/2016

NOTES: (continued)

6. Publication IPC-7351 may have alternate designs.
7. Solder mask tolerances between and around signal pads can vary based on board fabrication site.

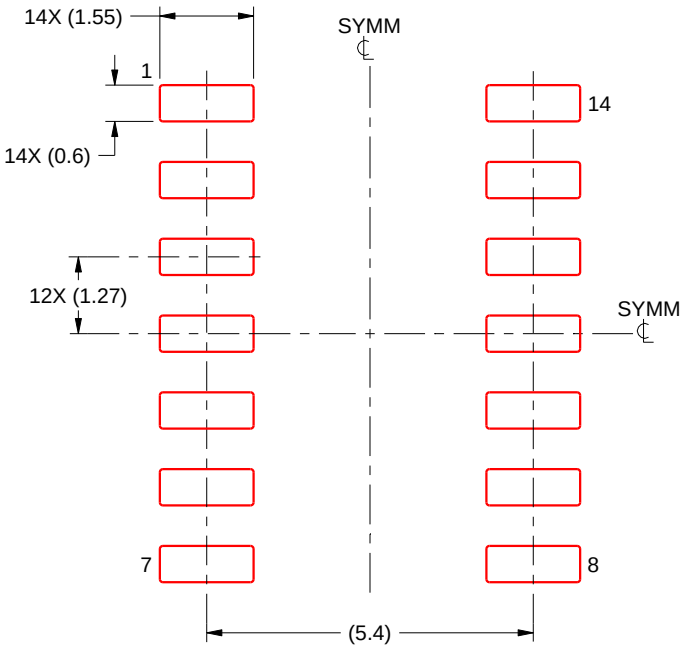

SOLDER PASTE EXAMPLE
BASED ON 0.125 mm THICK STENCIL
SCALE:8X

4220718/A 09/2016

NOTES: (continued)

8. Laser cutting apertures with trapezoidal walls and rounded corners may offer better paste release. IPC-7525 may have alternate design recommendations.
9. Board assembly site may have different recommendations for stencil design.

MECHANICAL DATA

NS (R-PDSO-G)** **PLASTIC SMALL-OUTLINE PACKAGE**

14-PINS SHOWN

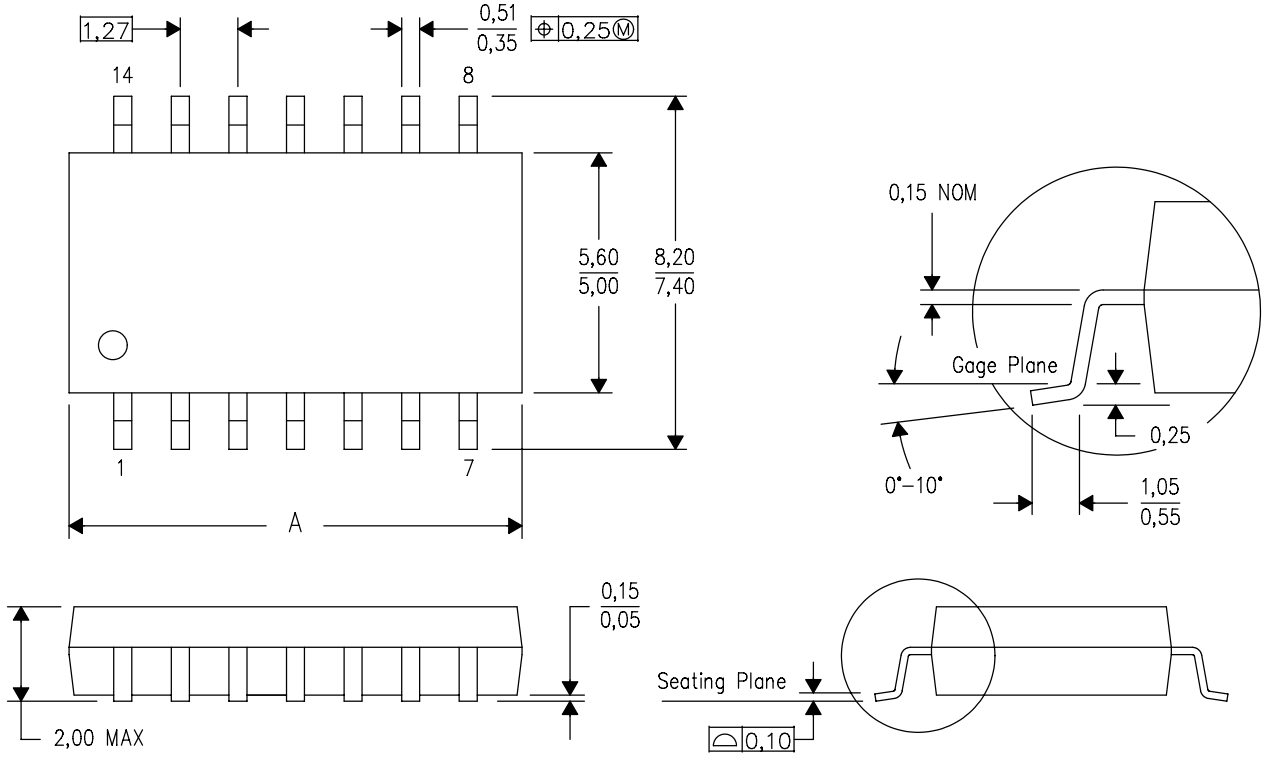

DIM \ PINS **	14	16	20	24
A MAX	10,50	10,50	12,90	15,30
A MIN	9,90	9,90	12,30	14,70

4040062/C 03/03

NOTES:
A. All linear dimensions are in millimeters.
B. This drawing is subject to change without notice.
C. Body dimensions do not include mold flash or protrusion, not to exceed 0,15.

W (R–GDFP–F14) CERAMIC DUAL FLATPACK

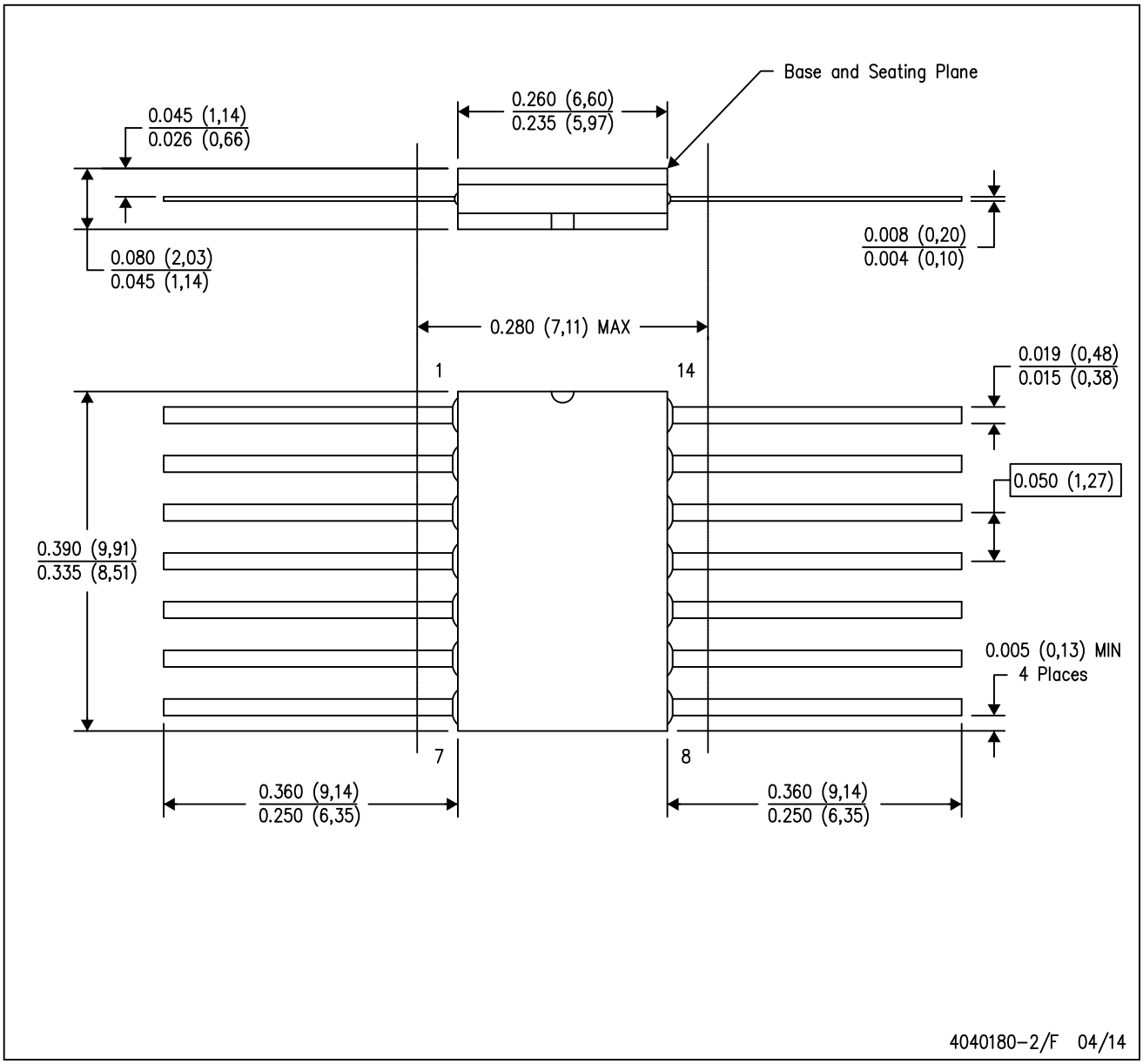

NOTES:
A. All linear dimensions are in inches (millimeters).
B. This drawing is subject to change without notice.
C. This package can be hermetically sealed with a ceramic lid using glass frit.
D. Index point is provided on cap for terminal identification only.
E. Falls within MIL STD 1835 GDFP1–F14

GENERIC PACKAGE VIEW

FK 20

LCCC - 2.03 mm max height

8.89 x 8.89, 1.27 mm pitch

LEADLESS CERAMIC CHIP CARRIER

This image is a representation of the package family, actual package may vary.
Refer to the product data sheet for package details.

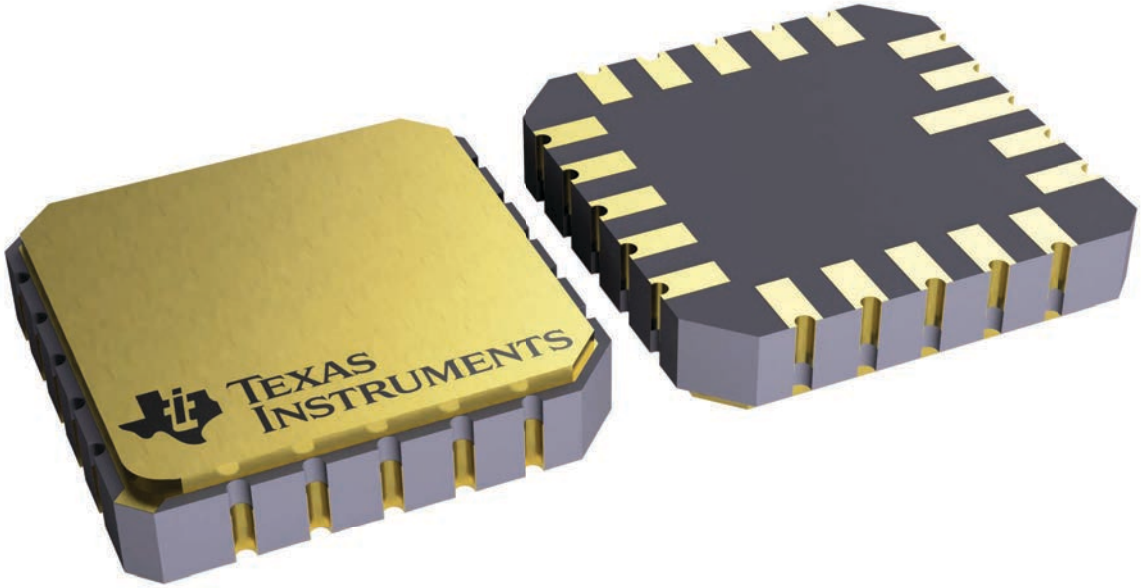

4229370VA\

J 14 CDIP - 5.08 mm max height

CERAMIC DUAL IN LINE PACKAGE

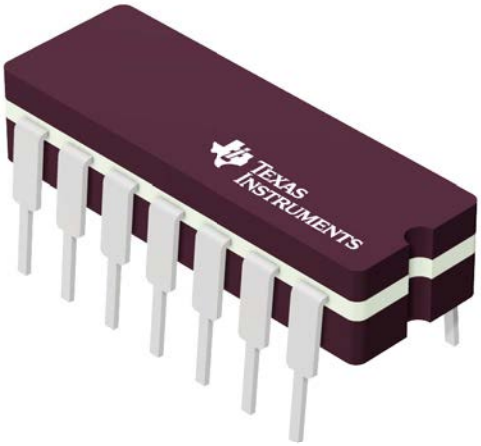

Images above are just a representation of the package family, actual package may vary.
Refer to the product data sheet for package details.

4040083-5/G

PACKAGE OUTLINE

J0014A

CDIP - 5.08 mm max height

CERAMIC DUAL IN LINE PACKAGE

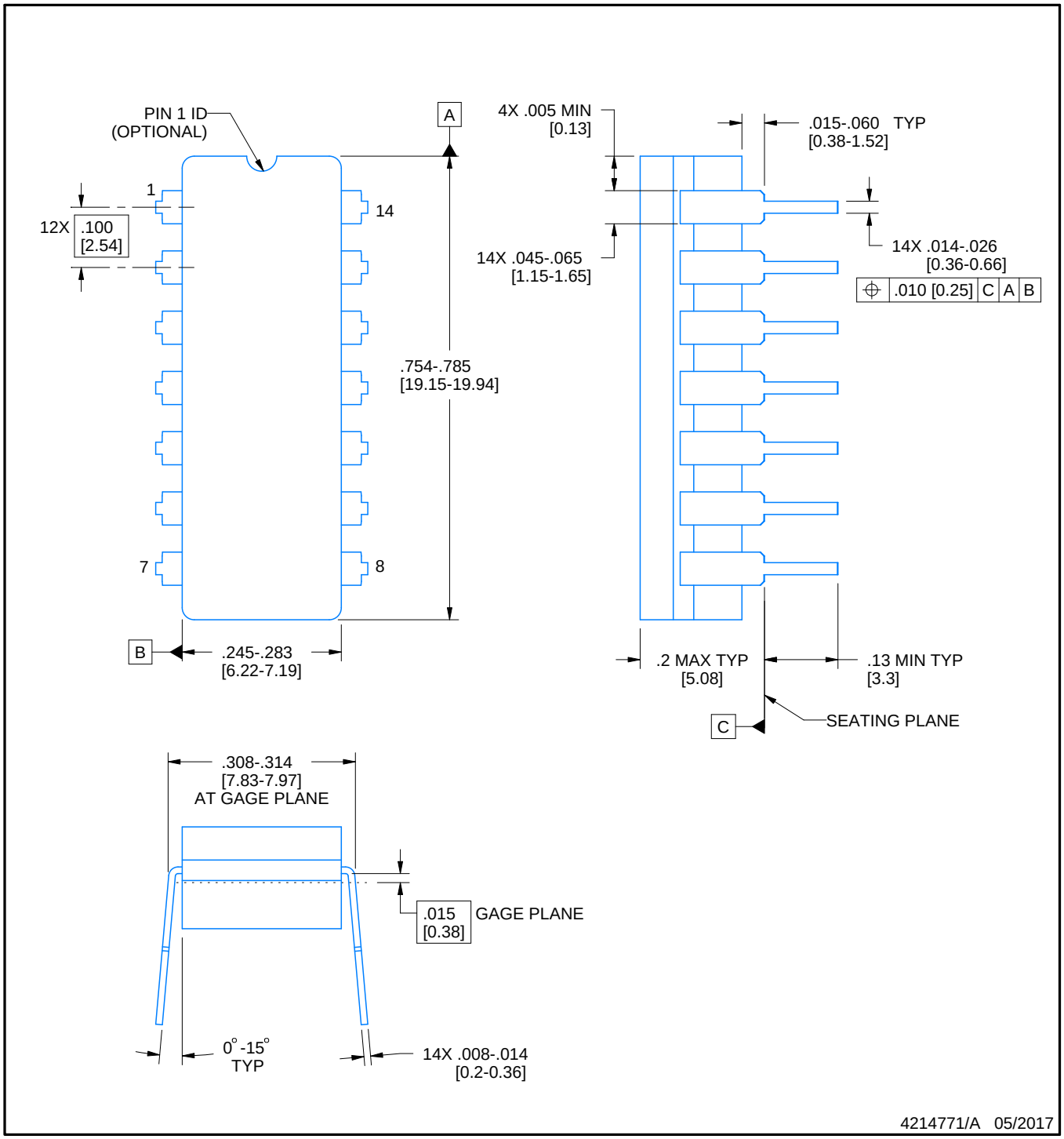

NOTES:

1. All controlling linear dimensions are in inches. Dimensions in brackets are in millimeters. Any dimension in brackets or parenthesis are for reference only. Dimensioning and tolerancing per ASME Y14.5M.
2. This drawing is subject to change without notice.
3. This package is hermitically sealed with a ceramic lid using glass frit.
4. Index point is provided on cap for terminal identification only and on press ceramic glass frit seal only.
5. Falls within MIL-STD-1835 and GDIP1-T14.

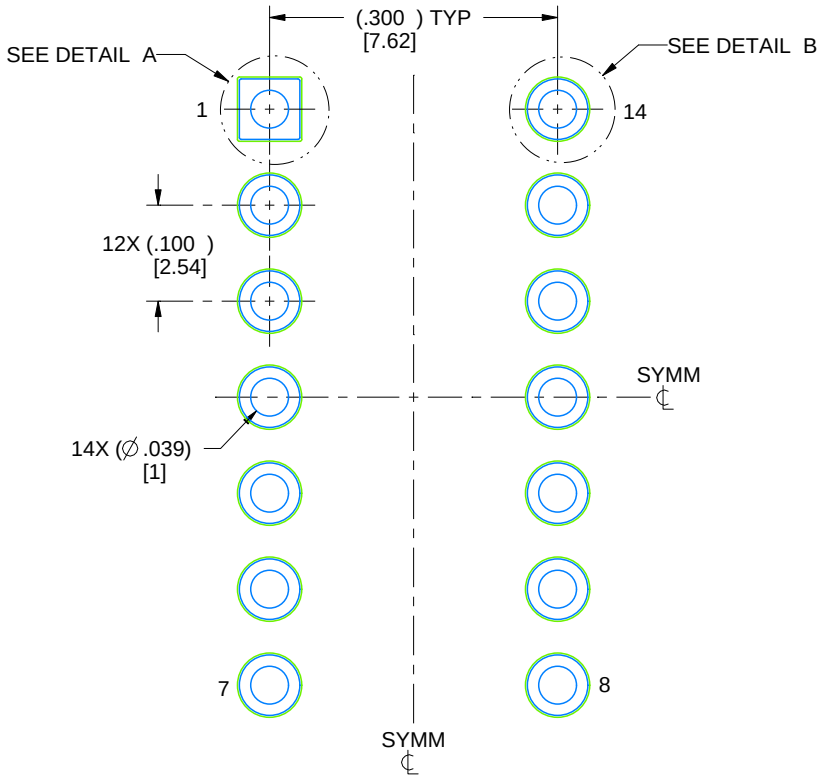

LAND PATTERN EXAMPLE
NON-SOLDER MASK DEFINED
SCALE: 5X

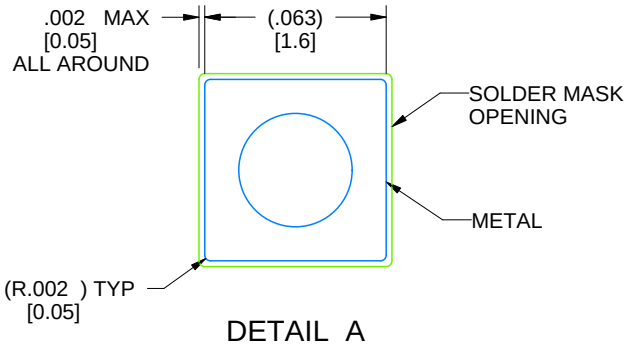

DETAIL A
SCALE: 15X

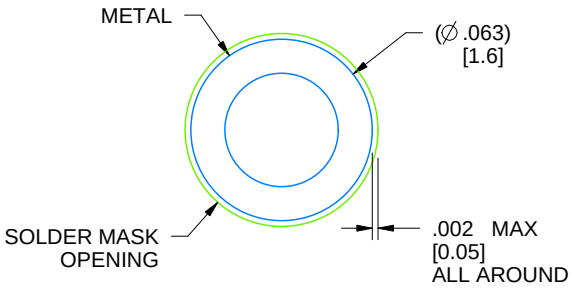

DETAIL B
13X, SCALE: 15X

4214771/A 05/2017

N (R–PDIP–T**) PLASTIC DUAL–IN–LINE PACKAGE

16 PINS SHOWN

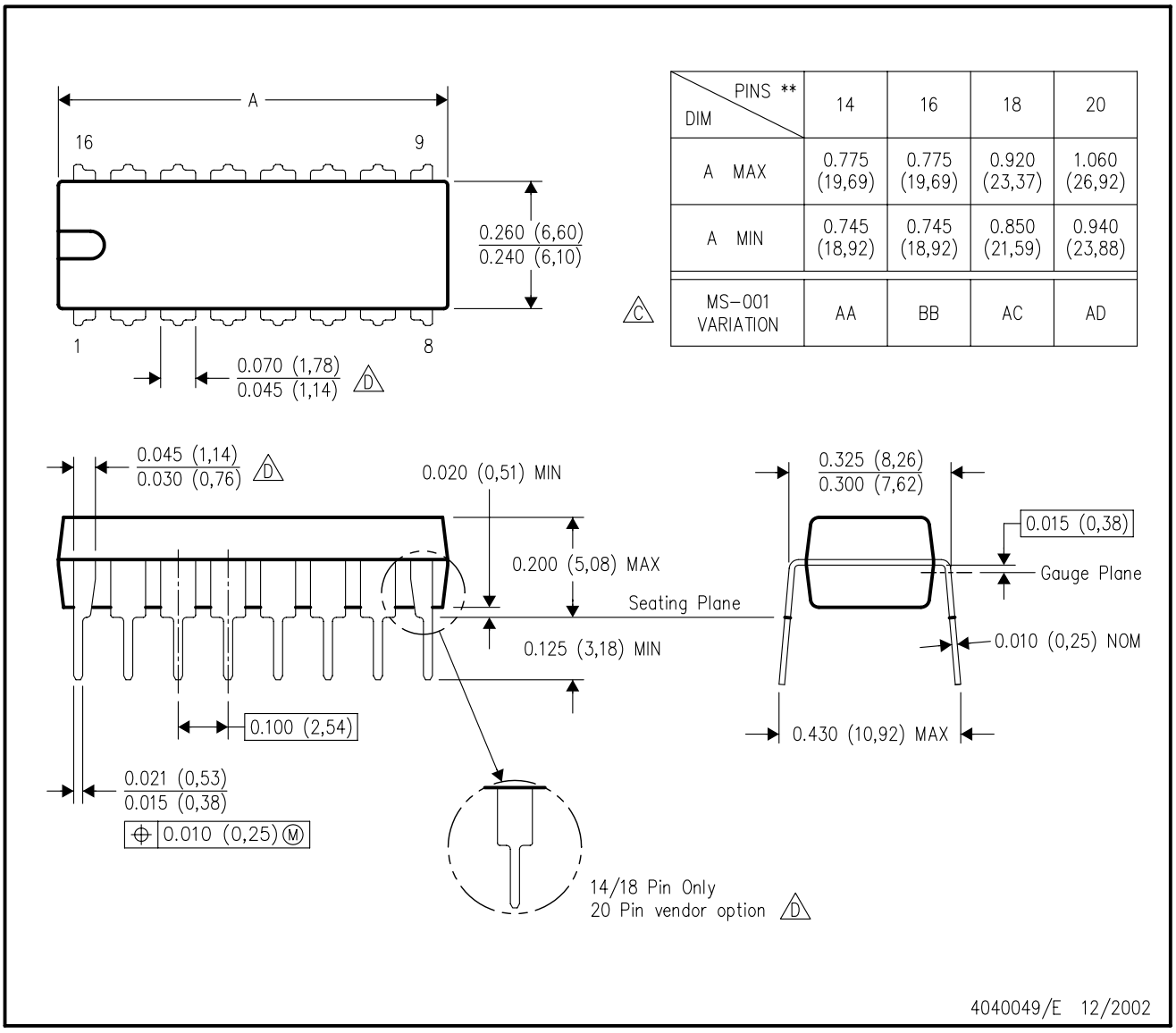

DIM \ PINS **	14	16	18	20
A MAX	0.775 (19,69)	0.775 (19,69)	0.920 (23,37)	1.060 (26,92)
A MIN	0.745 (18,92)	0.745 (18,92)	0.850 (21,59)	0.940 (23,88)
MS–001 VARIATION (C)	AA	BB	AC	AD

NOTES:
A. All linear dimensions are in inches (millimeters).
B. This drawing is subject to change without notice.
C. Falls within JEDEC MS–001, except 18 and 20 pin minimum body length (Dim A).
D. The 20 pin end lead shoulder width is a vendor option, either half or full width.

PW0014A

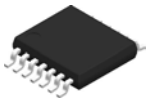

PACKAGE OUTLINE

TSSOP - 1.2 mm max height

SMALL OUTLINE PACKAGE

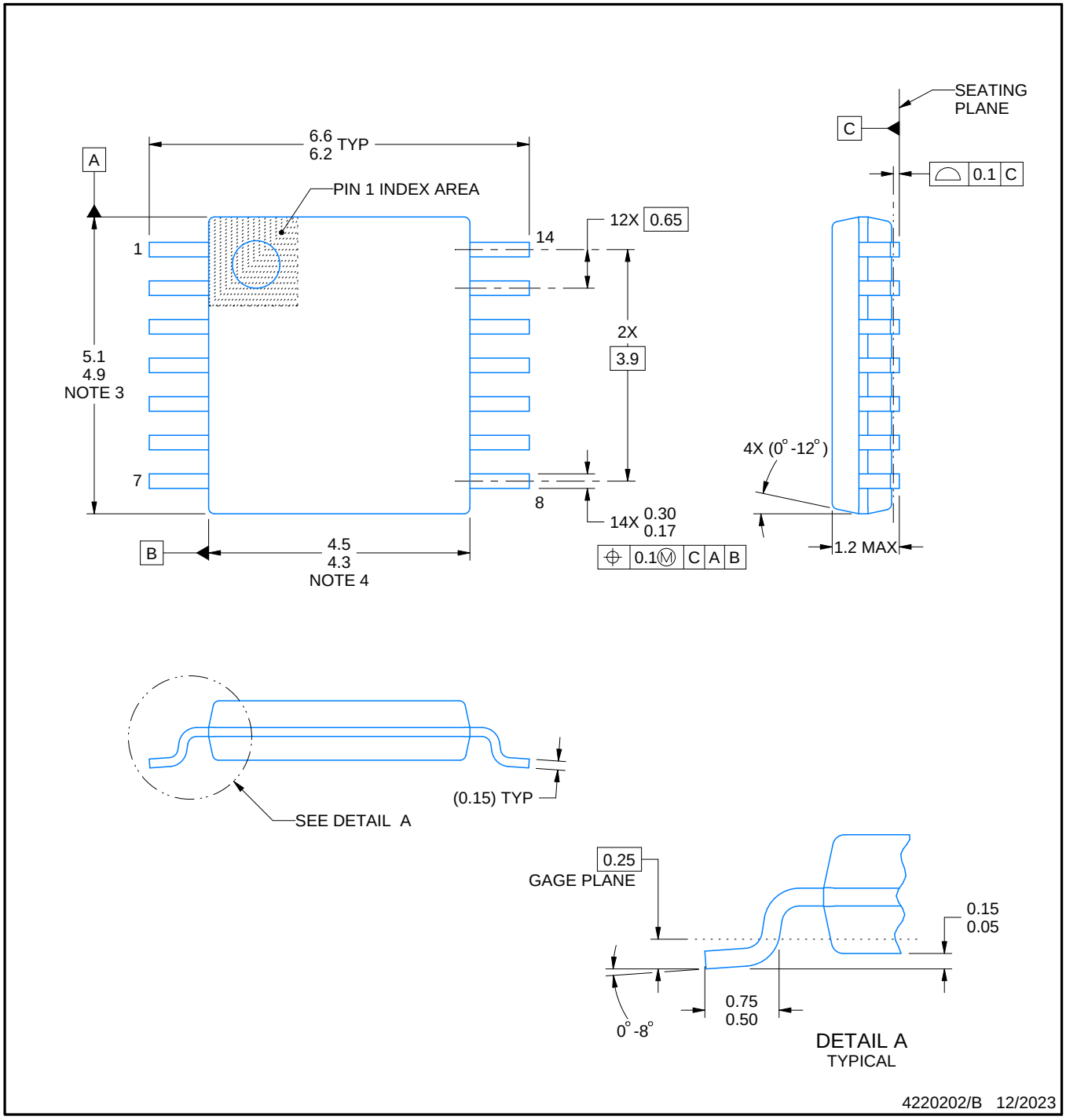

NOTES:

1. All linear dimensions are in millimeters. Any dimensions in parenthesis are for reference only. Dimensioning and tolerancing per ASME Y14.5M.
2. This drawing is subject to change without notice.
3. This dimension does not include mold flash, protrusions, or gate burrs. Mold flash, protrusions, or gate burrs shall not exceed 0.15 mm per side.
4. This dimension does not include interlead flash. Interlead flash shall not exceed 0.25 mm per side.
5. Reference JEDEC registration MO-153.

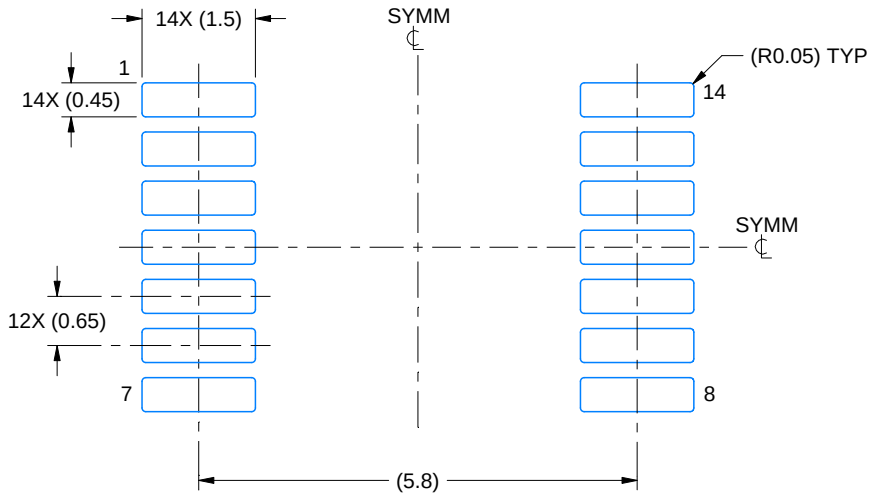

LAND PATTERN EXAMPLE
EXPOSED METAL SHOWN
SCALE: 10X

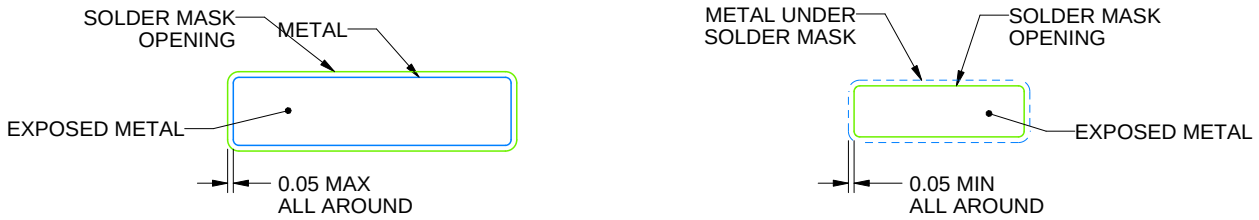

NON-SOLDER MASK DEFINED (PREFERRED)

SOLDER MASK DEFINED

SOLDER MASK DETAILS

4220202/B 12/2023

NOTES: (continued)

6. Publication IPC-7351 may have alternate designs.
7. Solder mask tolerances between and around signal pads can vary based on board fabrication site.

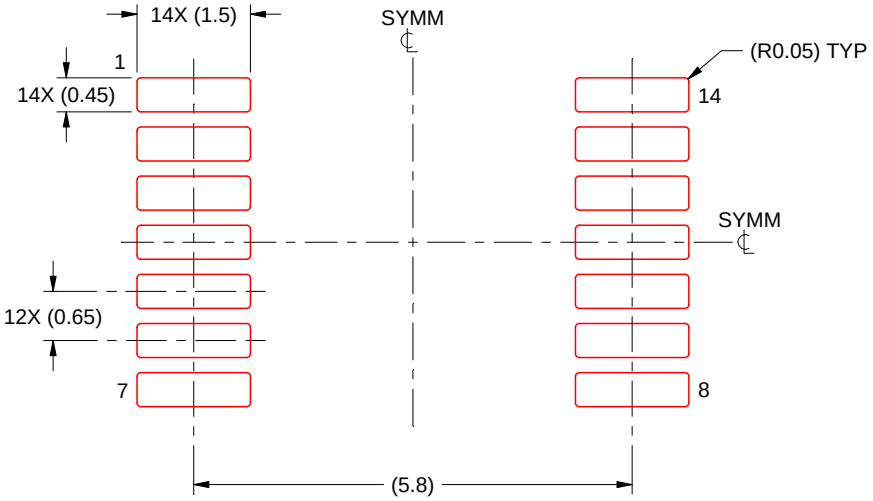

SOLDER PASTE EXAMPLE
BASED ON 0.125 mm THICK STENCIL
SCALE: 10X

4220202/B 12/2023

NOTES: (continued)

8. Laser cutting apertures with trapezoidal walls and rounded corners may offer better paste release. IPC-7525 may have alternate design recommendations.
9. Board assembly site may have different recommendations for stencil design.

IMPORTANT NOTICE AND DISCLAIMER

TI PROVIDES TECHNICAL AND RELIABILITY DATA (INCLUDING DATASHEETS), DESIGN RESOURCES (INCLUDING REFERENCE DESIGNS), APPLICATION OR OTHER DESIGN ADVICE, WEB TOOLS, SAFETY INFORMATION, AND OTHER RESOURCES “AS IS” AND WITH ALL FAULTS, AND DISCLAIMS ALL WARRANTIES, EXPRESS AND IMPLIED, INCLUDING WITHOUT LIMITATION ANY IMPLIED WARRANTIES OF MERCHANTABILITY, FITNESS FOR A PARTICULAR PURPOSE OR NON-INFRINGEMENT OF THIRD PARTY INTELLECTUAL PROPERTY RIGHTS.

These resources are intended for skilled developers designing with TI products. You are solely responsible for (1) selecting the appropriate TI products for your application, (2) designing, validating and testing your application, and (3) ensuring your application meets applicable standards, and any other safety, security, regulatory or other requirements.

These resources are subject to change without notice. TI grants you permission to use these resources only for development of an application that uses the TI products described in the resource. Other reproduction and display of these resources is prohibited. No license is granted to any other TI intellectual property right or to any third party intellectual property right. TI disclaims responsibility for, and you fully indemnify TI and its representatives against any claims, damages, costs, losses, and liabilities arising out of your use of these resources.

TI’s products are provided subject to TI’s Terms of Sale, TI’s General Quality Guidelines, or other applicable terms available either on ti.com or provided in conjunction with such TI products. TI’s provision of these resources does not expand or otherwise alter TI’s applicable warranties or warranty disclaimers for TI products. Unless TI explicitly designates a product as custom or customer-specified, TI products are standard, catalog, general purpose devices.

TI objects to and rejects any additional or different terms you may propose.

Copyright © 2026, Texas Instruments Incorporated

Last updated 10/2025