SLLS322A – NOVEMBER 1999 – REVISED JANUARY 2000

- **Provides High-Voltage Differential SCSI From Single-Ended Controller When Used With the SN75970B Control Transceiver**
- **Meets or Exceeds the Requirements of EIA Standard RS-485 and ISO-8482 Standards**
- **ESD Protection on Bus Pins to 12 kV**
- **Packaged in Shrink Small-Outline Package with 25 mil Terminal Pitch and Thin Small-Package with 20 mil Terminal Pitch**
- **Low Disabled-Supply Current 32 mA Typ**
- **Thermal Shutdown Protection**
- **Positive- and Negative-Current Limiting**
- **Power-Up/-Down Glitch Protection**
- **Open-Circuit Failsafe Receivers**

DGG OR DL PACKAGE
(TOP VIEW)

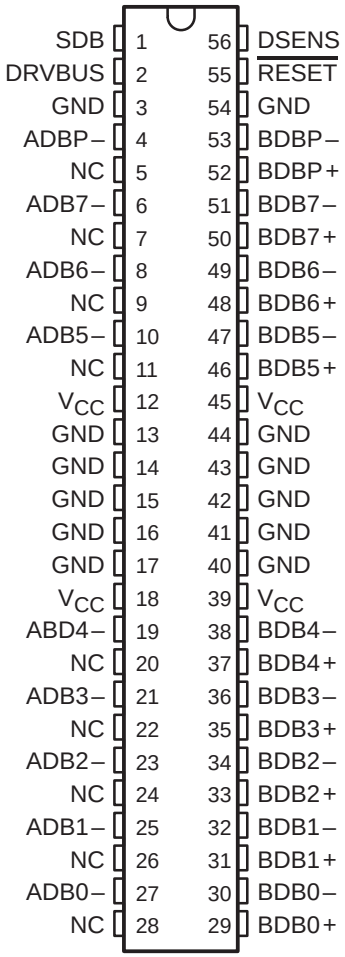

Pins 13 – 17 and 40 – 44 are connected together to the package lead frame and to signal ground.
NC – No internal connection

description

The SN75971B SCSI differential converter-data is a 9-channel RS-485 transceiver. When used in conjunction with its companion control transceiver, the SN75970B, the resulting chip set provides the superior electrical performance of differential SCSI from a single-ended SCSI bus or controller. A 16-bit Ultra-SCSI (or Fast-20) SCSI bus can be implemented with just three devices (two data and one control) in the space efficient, 56-pin, shrink small-outline package (SSOP) or thin shink small outline package (TSSOP) and a few external components. An 8-bit SCSI bus requires only one data and one control transceiver.

The SN75971B is available in a B2 (20 Mxfer) version and a B1 (10 Mxfer) version.

In a typical differential SCSI node, the SCSI controller provides an enable for each external RS-485 transceiver channel. This could require as many as 27 extra terminals for a 16-bit differential bus controller or relegate a 16-bit, single-ended controller to only an 8-bit differential bus. Using the standard nine SCSIcontrol signals, the SN75970B control transceiver decodes the state of the bus and enables the SN75971B data transceiver to transmit the single-ended SCSI input signals (A side) differentially to the cable or receive the differential cable signals (B side) and drive the single-ended outputs to the controller.

A reset function, which disables all outputs and clears internal latches, can be accomplished from two external inputs and two internally-generated signals. $\overline{\text{RESET}}$ (reset) and DSENS (differential sense) are available to external circuits for a bus reset or to disable all outputs should a single-ended cable be inadvertently connected to a differential connector. Internally-generated power-up and thermal-shutdown signals have the same affect when the supply voltage is below approximately 3.5 V or the junction temperature exceeds 175°C.

Please be aware that an important notice concerning availability, standard warranty, and use in critical applications of Texas Instruments semiconductor products and disclaimers thereto appears at the end of this data sheet.

PRODUCTION DATA information is current as of publication date. Products conform to specifications per the terms of Texas Instruments standard warranty. Production processing does not necessarily include testing of all parameters.

Copyright © 2000, Texas Instruments Incorporated

description (continued)

The SCSI, differential, converter-data chip operates in two modes depending on the state of the DRVBUS input. With DRVBUS low, a bidirectional latch circuit sets the direction of data transfer. Each data bit has its own latch, and each bit's direction is independent of all other bits. When neither the single-ended nor the differential sides are asserted, the latch disables both A- and B-side output drivers. When the input to either side is asserted, the latch enables the opposite side's driver and sets data flow from the asserted input to the opposite side of the device. When the input deasserts, the latch maintains the direction until the receiver on the enabled driver detects a deassertion. The latch then returns to the initial state. No parity checking is done by this device; the parity signal passes through the device like other data signals do.

When DRVBUS is high, direction is determined by the SDB signal. However, a change in SDB does not always immediately change the direction. When DRVBUS first asserts, the direction indicated by SDB is latched and takes effect immediately. When SDB changes while DRVBUS is high, the drivers that were on immediately turn off. However, the other driver set does not turn on until the receivers sense a deasserted state on all nine data lines. This is done to prevent the active drivers from turning on until all other drivers are off and the terminators pull the lines to a deasserted state.

The single-ended SCSI bus interface consists of CMOS, bidirectional inputs and outputs. The drivers are rated to ±16 mA of output current. The receiver inputs are pulled high with approximately 4 mA to eliminate the need for external pullup resistors for the open-drain outputs of most single-ended SCSI controllers. The single-ended side of the device is not intended to drive the SCSI bus directly.

The differential SCSI bus interface consists of bipolar, bidirectional inputs and outputs that meet or exceed the requirements of EIA-485 and ISO 8482-1982/TIA TR30.2 referenced by American National Standard of Information Systems (ANSI) X3.131-1994 Small Computer System Interface-2 (SCSI-2) and SCSI-3 Fast-20 Parallel Interface (Fast-20) X3.277:1996.

The SN75971B is characterized for operation over the temperature range of 0°C to 70°C.

Terminal Functions

TERMINAL NAME	TERMINAL NO.	I/O	DESCRIPTION
ADBn–, where n = {0,1,2,3,4,5,6,7,P}	4, 6, 8, 10, 19, 21, 23, 25, 27	I/O, Single-ended SCSI voltage levels, Strong pullup	Bidirectional I/O for data and parity bits to and from the single-ended SCSI controller. As outputs, these terminals can source or sink 16 mA. As inputs, they are pulled up with about 4-mA to eliminate external resistors.
BDBn+, where n = {0,1,2,3,4,5,6,7,P}	29, 31, 33, 35, 37, 46, 48, 50, 52	I/O, RS-485, Weak pulldown	Bidirectional I/O for data and parity to and from the differential SCSI bus.
BDBn–, where n = {0,1,2,3,4,5,6,7,P}	30, 32, 34, 36, 38,47, 49, 51, 53	I/O, RS-485, Weak pulldown	Bidirectional I/O for the complement of data and parity to and from the differential SCSI bus.
DRVBUS	2	Input, TTL levels, Weak pulldown	A high-level logic signal from the control transceiver enables either the single-ended or differential drivers as directed by SDB.
DSENS	56	Input, TTL levels, Weak pullup	A low-level input initializes the internal latches and disables all drivers.
$\overline{\text{RESET}}$	55	Input, TTL levels, Weak pullup	A low-level input initializes the internal latches and disables all drivers.
SDB	1	Input, TTL levels, Weak pulldown	A high-level logic signal from the control transceiver sends data from the differential bus to the single-ended bus. A low-level signal reverses the flow.

functional block diagram

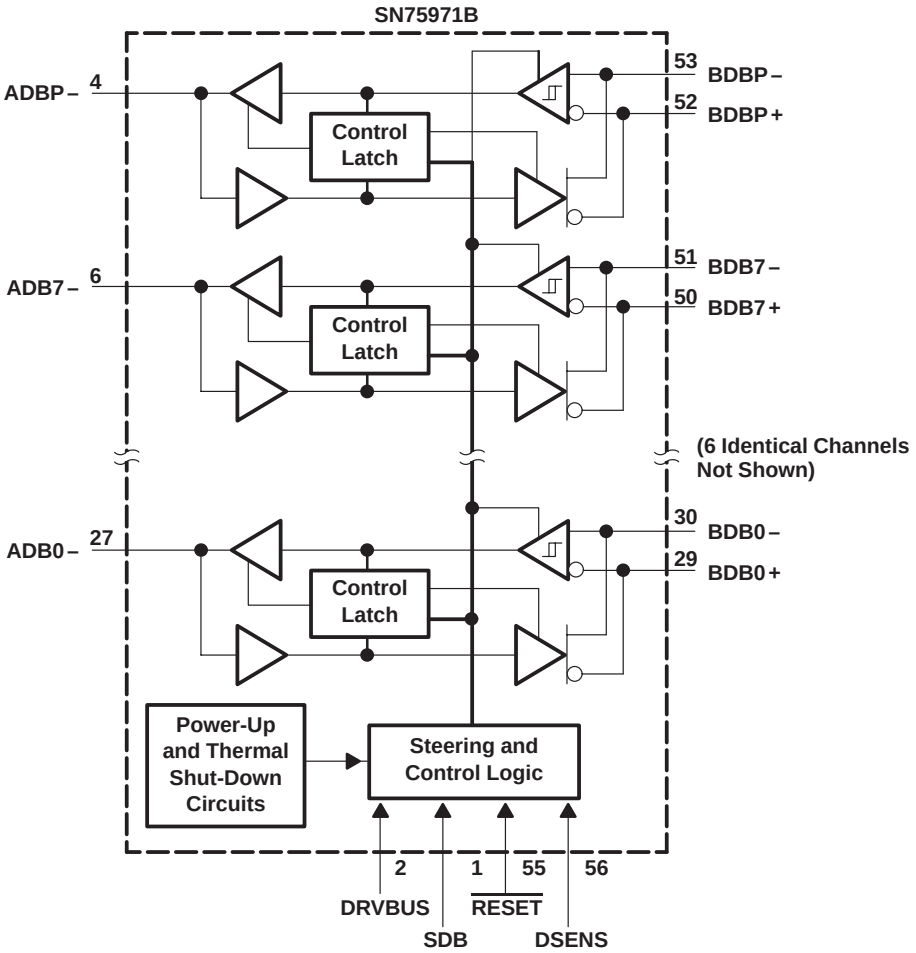

schematics of inputs and outputs

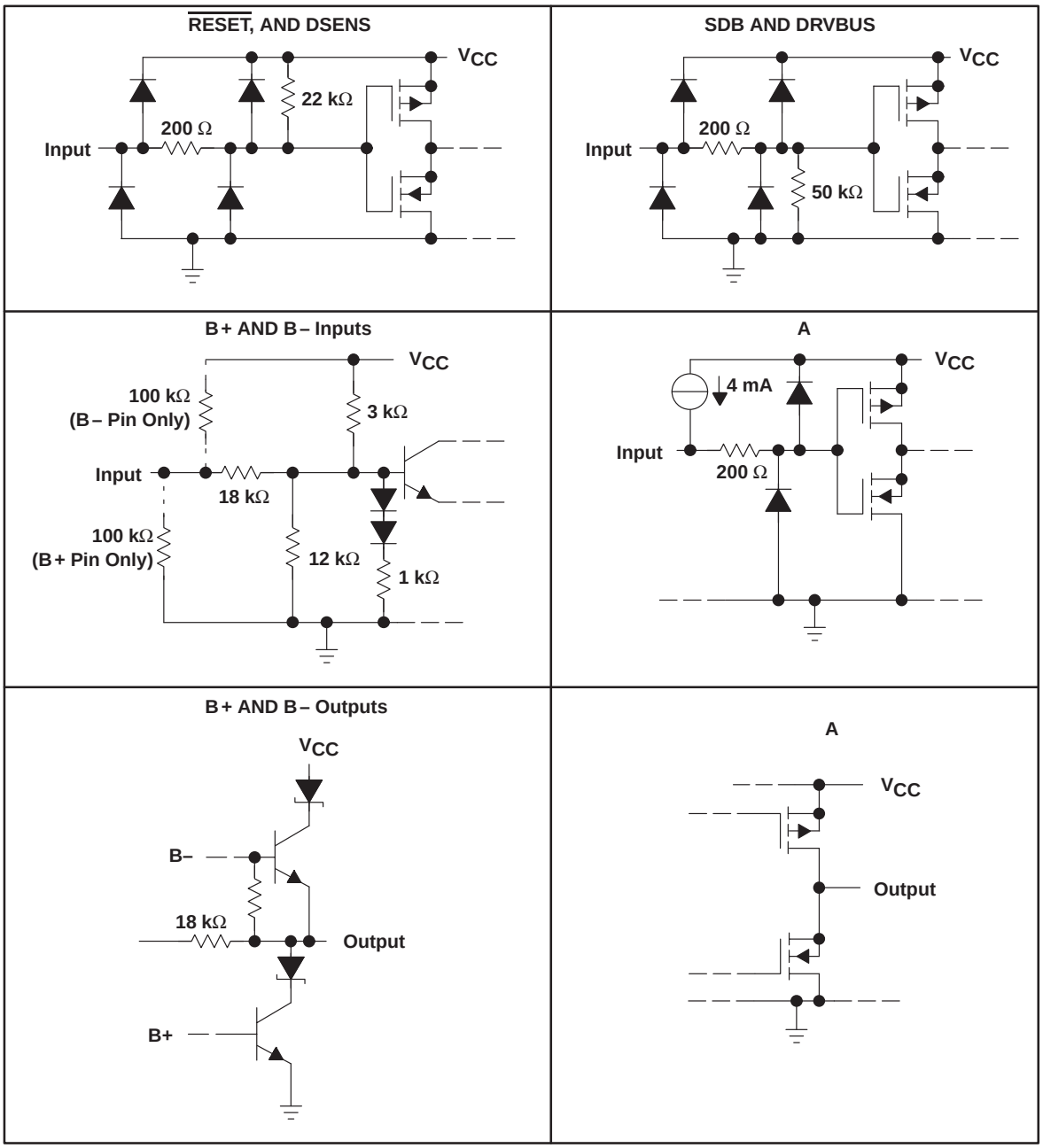

absolute maximum ratings over operating free-air temperature range (unless otherwise noted)†

Supply voltage range, V_{CC} (see Note 1) . . . . . –0.3 V to 7 V
Differential bus voltage range (B side) . . . . . –10 V to 15 V
Single-ended bus voltage range (A side and control inputs) . . . . . –0.3 V to 7 V
Continuous total power dissipation (see Note 2) . . . . . Internally Limited (see Dissipation Rating Table)
Electrostatic discharge (see Note 3): Class 2 A (all pins) . . . . . 4 kV
Class 2 B (all pins) . . . . . 400 V
Class 3 A (B-side and GND) . . . . . 12 kV
Class 3 B (B-side and GND) . . . . . 400 V
Operating free-air temperature range, T_A . . . . . 0°C to 70°C
Storage temperature range, T_{stg} . . . . . 65°C to 150°C
Lead temperature 1,6 mm (1/16 inch) from case for 10 seconds . . . . . 260°C

† Stresses beyond those listed under “absolute maximum ratings” may cause permanent damage to the device. These are stress ratings only, and functional operation of the device at these or any other conditions beyond those indicated under “recommended operating conditions” is not implied. Exposure to absolute-maximum-rated conditions for extended periods may affect device reliability.

NOTES:
1. All voltage values are with respect to GND.
2. The maximum operating junction temperature is internally limited. Use the dissipation rating table to operate below this temperature.
3. This absolute maximum rating is tested in accordance with MIL-STD-883C, Method 3015.7.

DISSIPATION RATING TABLE

PACKAGE	$T_A \le 25°C$ POWER RATING	DERATING FACTOR‡ ABOVE $T_A = 25°C$	$T_A = 70°C$ POWER RATING
DGG	3333 mW	26.7 mW/°C	2133 mW
DL	3709 mW	29.7 mW/°C	2374 mW

‡ This is the inverse of the traditional junction-to-case thermal resistance ($R_{\theta JA}$) for High-K (per JEDEC) PCB installations.

recommended operating conditions

		MIN	NOM	MAX	UNIT
Supply voltage, V_{CC}		4.75	5	5.25	V
High-level input voltage, V_{IH}	A side and control	2			V
Low-level input voltage, V_{IL}	A side and control			0.8	V
Voltage at any bus terminal (separately or common-mode), V_O or V_I	B side			12 –7	V
High-level output current, I_{OH}	A side			–16	mA
Low-level output current, I_{OL}	A side			16	mA
Operating case temperature, T_C		0		125	°C
Operating free-air temperature, T_A		0		70	°C

electrical characteristics over recommended operating conditions (unless otherwise noted)

PARAMETER			TEST CONDITIONS		MIN	TYP†	MAX	UNIT
$V_{OD(H)}$	Driver high-level differential output voltage		See Figure 1		–1	–2.2		V
$V_{OD(L)}$	Driver low-level differential output voltage		See Figure 1		1	1.8		V
V_{OH}	High-level output voltage	A side	V_{ID} = –200 mV,	I_{OH} = –16 mA	2.5	4.2		V
		B side	I_{OH} = –60 mA			3.4		
V_{OL}	Low-level output voltage	A side	V_{ID} = 200 mV,	I_{OL} = 16 mA		0.4	0.8	V
		B side	I_{OL} = 60 mA			1.6		
V_{IT+}	Receiver positive-going differential input threshold voltage	B side	I_{OH} = –16 mA	See Figure 2			0.2	V
V_{IT-}	Receiver negative-going differential input threshold voltage	B side	I_{OL} = 16 mA	See Figure 2	–0.2§			V
V_{hys}	Receiver input hysteresis voltage (V_{IT+} – V_{IT-})	B side			35	45		mV
I_I	Bus input current	B or $\overline{B}$	V_I = 12 V, Other input at 0 V	V_{CC} = 5 V		0.6	1	mA
				V_{CC} = 0		0.7	1	
			V_I = –7 V, Other input at 0 V	V_{CC} = 5 V		–0.5	–0.8	mA
				V_{CC} = 0		–0.4	–0.8	
I_{IH}	High-level input current	A side	V_{IH} = 2 V		–2	–5	–8	mA
		$\overline{RESET}$, DSENS				–70	–100	µA
		SDB, DRVBUS					25	
I_{IL}	Low-level input current	A side	V_{IL} = 0.8 V			–6	–9	mA
		$\overline{RESET}$, DSENS				–66	–100	µA
		SDB, DRVBUS					±30	
I_{OS}	Short-circuit output current	B side	V_O = 5 V and 0				±250	mA
I_{OZ}	High-impedance-state output current	A side			–2	–5	–8	
						–6	–9	
		B side				See I_I		
I_{CC}	Supply current	Disabled	$\overline{RESET}$ at 0.8 V,	Others open		38	46	mA
		B to A Enabled	SDB and DRVBUS at 2 V, All other inputs open,	V_{ID} = –1 V, No load		39	50	
		A to B Enabled	SDB at 0.8 V, All other inputs open,	DRVBUS at 2 V, No load		32	66	
C_O	Output capacitance		$V_I = 0.6 \sin(2\pi \times 10^6 t) + 1.5$ V,	BDBn to GND		18	21	pF
C_{pd}	Power dissipation capacitance‡		B to A,	One channel		40		pF
			A to B,	One channel		100		pF

† All typical values are at V_{CC} = 5 V, T_A = 25°C.
‡ C_{pd} determines the no-load dynamic current consumption, $I_S = C_{pd} \times V_{CC} \times f + I_{CC}$.
§ The algebraic convention with the least positive (more negative) limit is designated minimum, is used in this data sheet for the differential input voltage only.

switching characteristics over recommended of operating conditions (unless otherwise noted)

PARAMETER			TEST CONDITIONS	MIN	MAX	UNIT
t_{d1}, t_{d2}	Delay time, A to B, high- to low-level or low- to high-level output	SN75971B1	See Figures 3 and 4	3	14	ns
			V_{CC} = 5 V, T_A = 25°C, See Figures 3 and 4	4	12	
			V_{CC} = 5 V, T_A = 70°C, See Figures 3 and 4	4.9	12.9	
		SN75971B2	See Figures 3 and 4	5	12	
			V_{CC} = 5 V, T_A = 25°C, See Figures 3 and 4	6.2	10.2	
			V_{CC} = 5 V, T_A = 70°C, See Figures 3 and 4	6.9	10.9	
t_{d3}, t_{d4}	Delay time, B to A, high- to low-level or low- to high-level output	SN75971B1	See Figures 5 and 6	5.4	18.1	ns
			V_{CC} = 5 V, T_A = 25°C, See Figures 5 and 6	6.5	15.4	
			V_{CC} = 5 V, T_A = 70°C, See Figures 5 and 6	7.2	16.1	
		SN75971B2	See Figures 5 and 6	7.7	15	
			V_{CC} = 5 V, T_A = 25°C, See Figures 5 and 6	8.7	13.2	
			V_{CC} = 5 V, T_A = 70°C, See Figures 5 and 6	9.4	13.9	
$t_{sk(pp)}$	Skew, part-to-part†	SN75971B1	A to B See Figures 5 and 6		8	ns
			B to A See Figures 5 and 6		9	
		SN75971B2	A to B See Figures 5 and 6		4	
			B to A See Figures 5 and 6		5	
$t_{sk(p)}$	Pulse skew‡				4	ns
t_{dis1}	Disable time, A to B		See Figures 3 and 4		200	ns
t_{dis2}	Disable time, B to A		See Figures 5 and 6		35	ns
t_{en1}	Enable time, A to B		See Figures 3 and 4		65	ns
t_{en2}	Enable time, B to A		See Figures 5 and 6		65	ns
$t_{en(TX)}$	Enable time, receive-to-transmit		See Figure 7		142	ns

† Part-to-part skew is the magnitude of the difference in propagation delay times between any two devices when both operate with the same supply voltages, the same temperature, and the same loads.
‡ Pulse skew is the difference between the high-to-low and low-to-high propagation delay times of any single channel.

PARAMETER MEASUREMENT INFORMATION

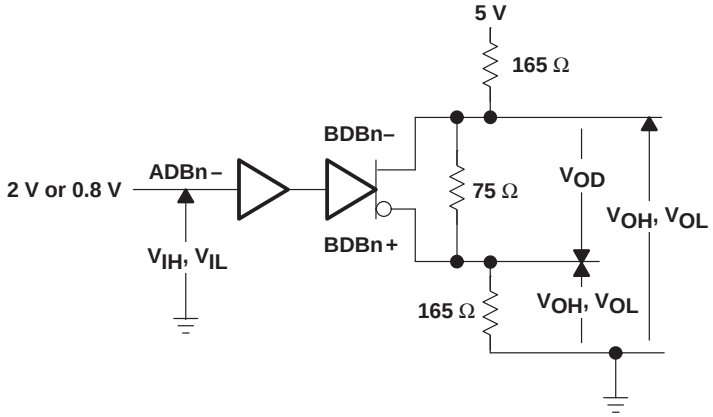

NOTES: A. Resistance values are in ohms with a tolerance of ± 5%.
B. All input voltage levels are held to within 0.01 V.
C. The logical function is set with SDB at 0.8 V, DRVBUS at 3.5 V, and all others left open.

Figure 1. Differential Driver V_{OD}, V_{OH}, and V_{OL} Test Circuit

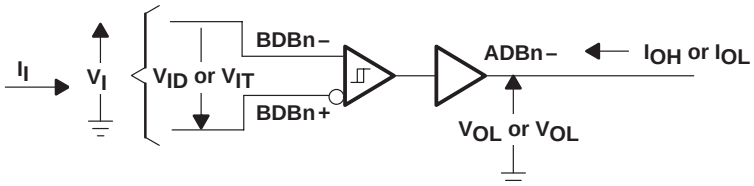

NOTES: A. Resistance values are in ohms with a tolerance of ± 5%.
B. All input voltage levels are held to within 0.01 V.
C. The logical function is set with SDB and DRVBUS at 3.5 V, and all others left open.

Figure 2. Single-Ended Driver V_{OH}, V_{OL}, V_{IT+}, and V_{IT-} Test Circuit

PARAMETER MEASUREMENT INFORMATION

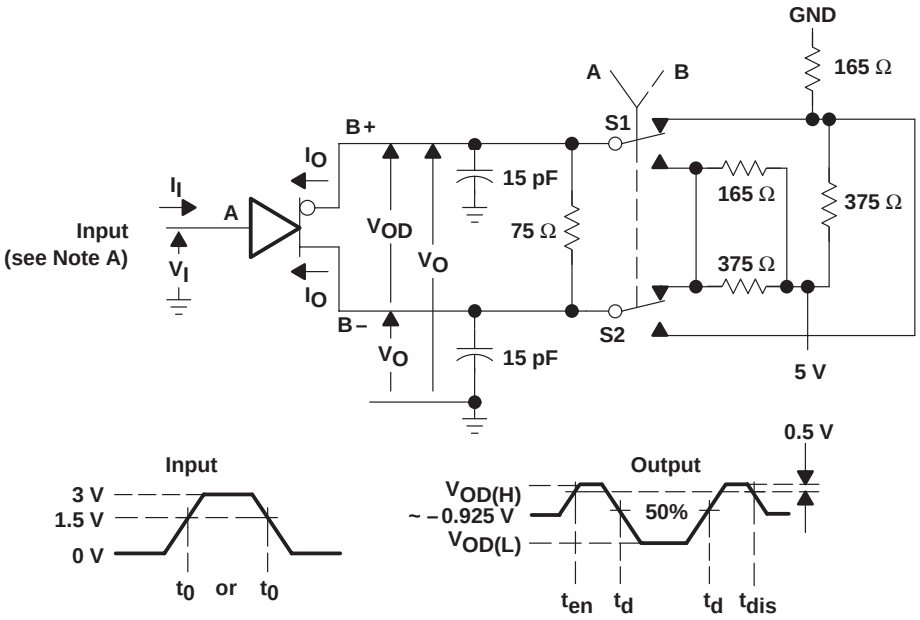

NOTES: A. The input pulse is supplied by a generator having the following characteristics: PRR ≤ 1 MHz, 45% < duty cycle < 50%, t_r ≤ 1 ns, t_f ≤ 1 ns, Z_O = 50 Ω.
B. C_L includes probe and jig capacitance.
C. Resistance values are in ohms with a tolerance of ± 5%.
D. All input voltage levels are held to within 0.01 V.

Figure 3. A to B Propagation Delay Time Test Circuit

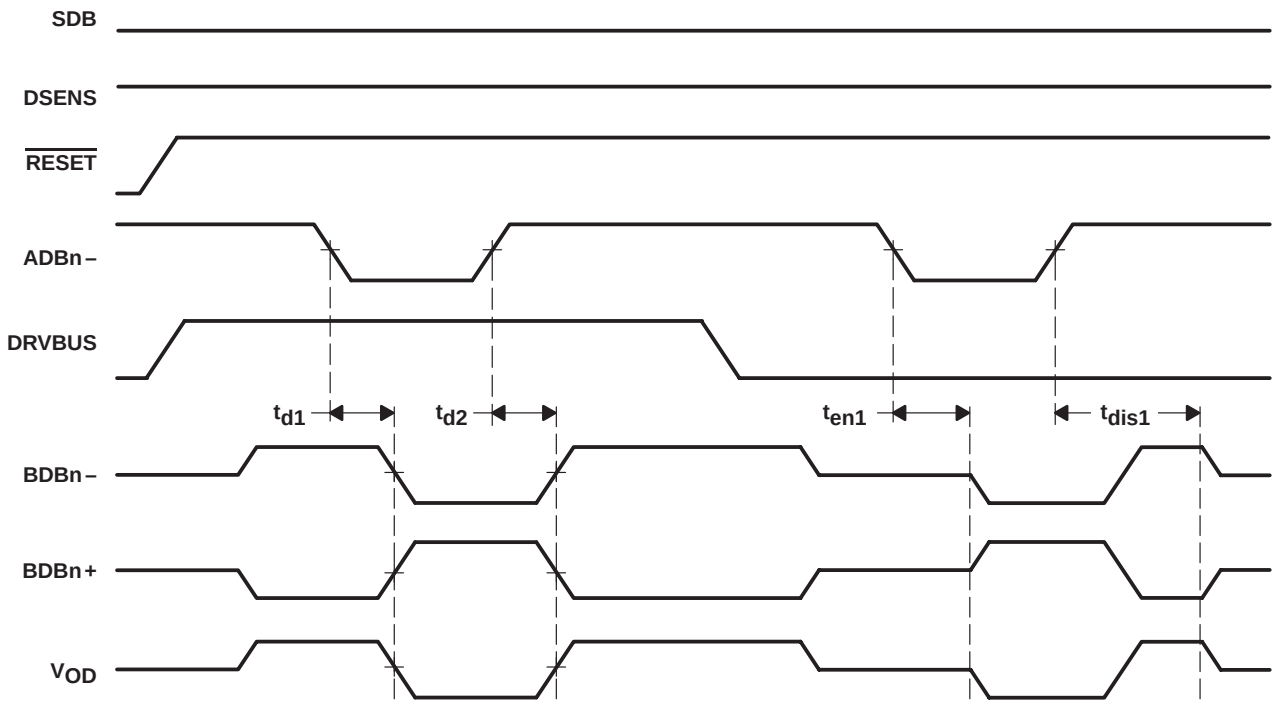

Figure 4. A to B Timing Waveforms

PARAMETER MEASUREMENT INFORMATION

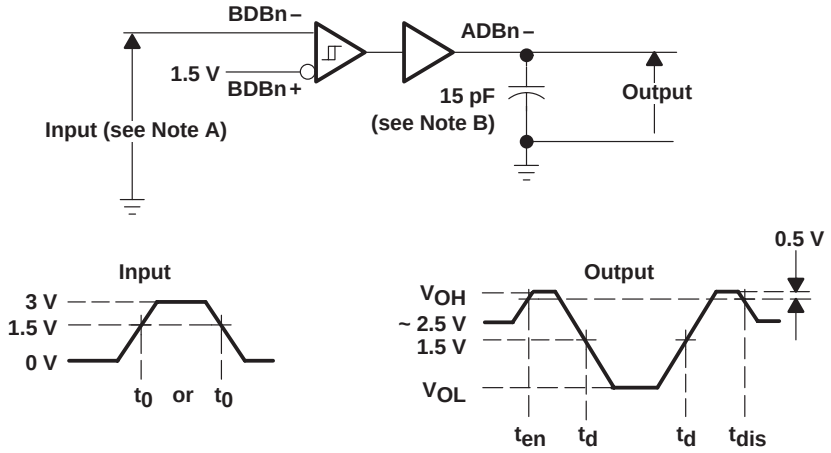

NOTES: A. The input pulse is supplied by a generator having the following characteristics: PRR ≤ 1 MHz, 45% < duty cycle < 50%, t_r ≤ 1 ns, t_f ≤ 1 ns, Z_O = 50 Ω.
B. C_L includes probe and jig capacitance.
C. Resistance values are in ohms with a tolerance of ± 5%.
D. All input voltage levels are held to within 0.01 V.

Figure 5. B to A Propagation Delay Time Test Circuit

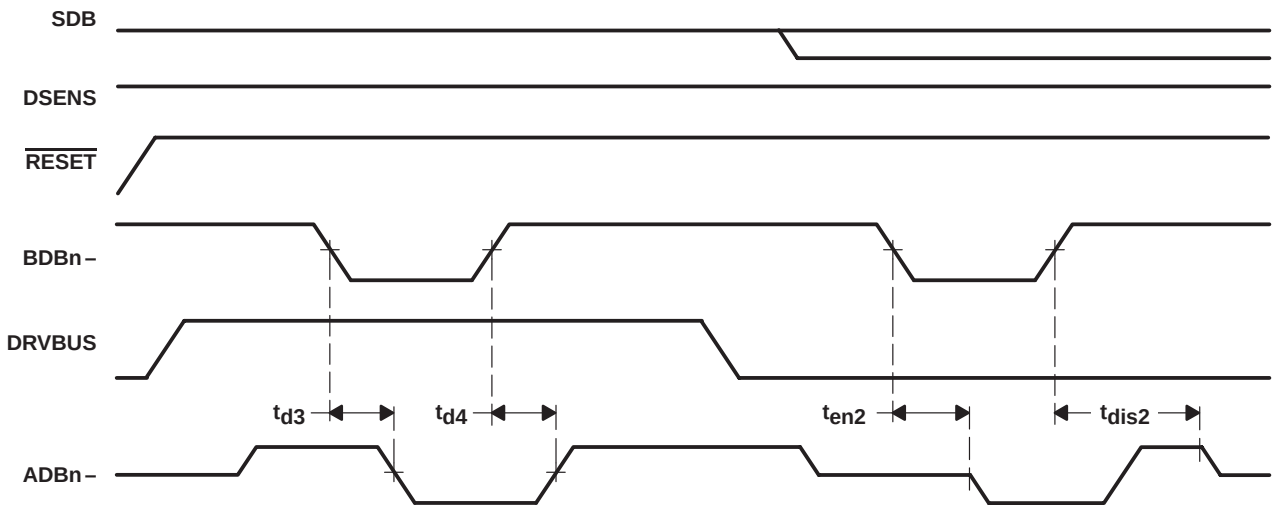

Figure 6. B to A Timing Waveforms

PARAMETER MEASUREMENT INFORMATION

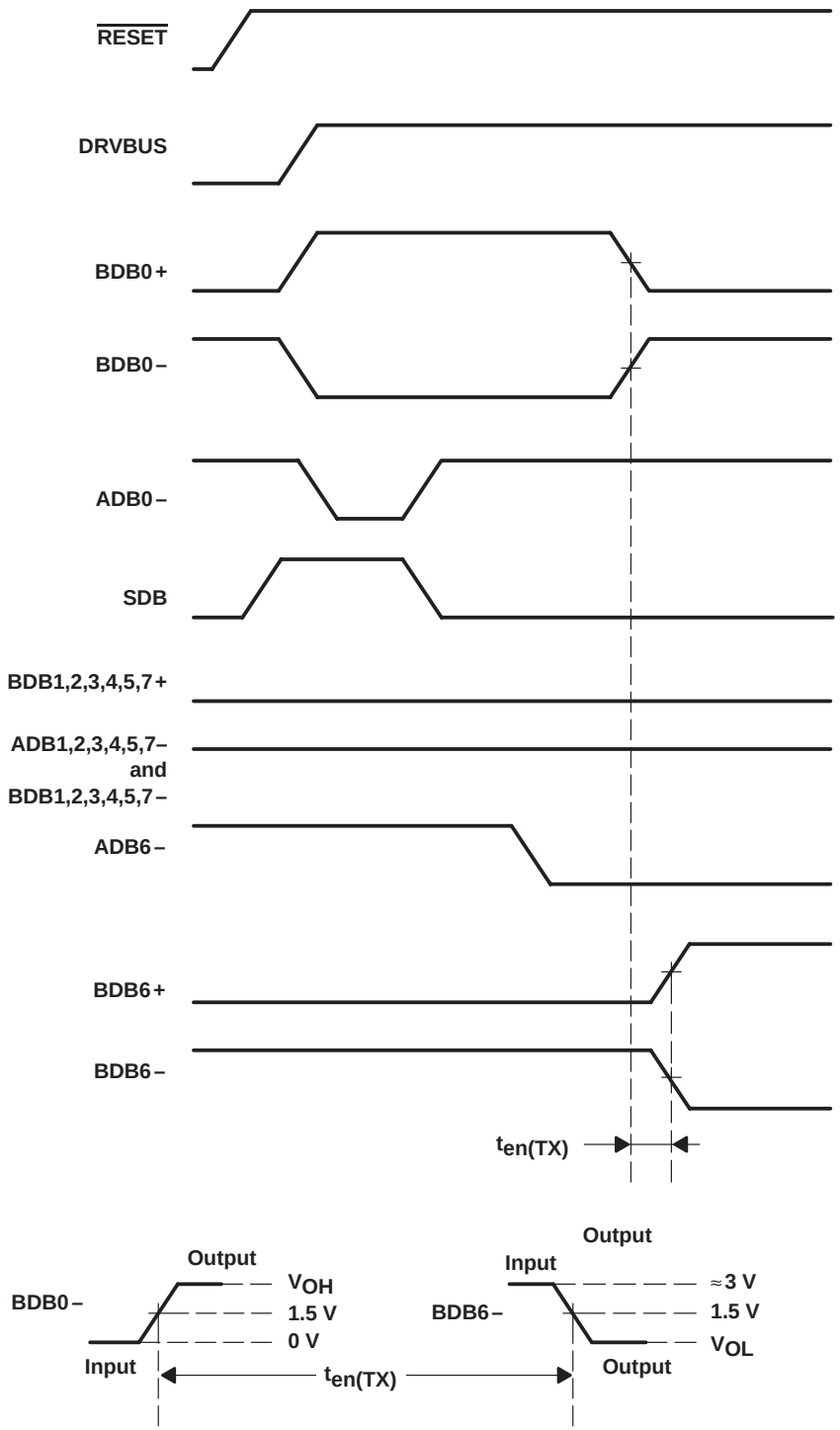

Figure 7. Receive-to-Transmit ($t_{en(TX)}$) Timing Waveforms

APPLICATION INFORMATION

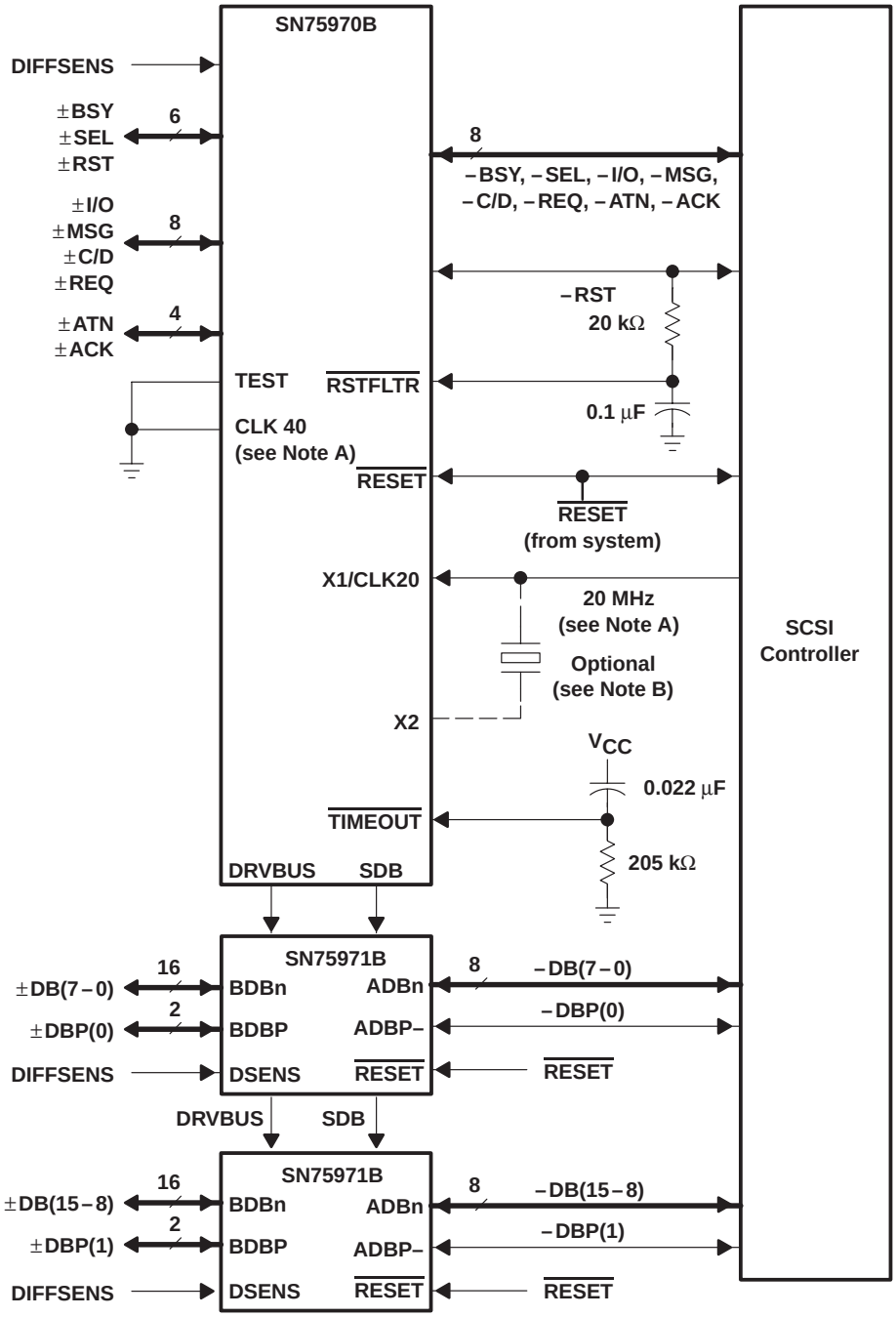

NOTES: A. When using the 40-MHz clock input, X1 must be connected to V_{CC}.
B. The oscillator cell of the SN75970B is for a series-resonant crystal and requires approximately 10 pF (including fixture capacitance) from X1 and X2 to ground in order to function.

Figure 8. Typical Application of the SN75970B and SN75971B

PACKAGING INFORMATION

Orderable part number	Status (1)	Material type (2)	Package | Pins	Package qty | Carrier	RoHS (3)	Lead finish/ Ball material (4)	MSL rating/ Peak reflow (5)	Op temp (°C)	Part marking (6)
SN75971B2DL	Active	Production	SSOP (DL) | 56	20 | TUBE	Yes	NIPDAU	Level-2-260C-1 YEAR	0 to 70	SN75971B2
SN75971B2DL.A	Active	Production	SSOP (DL) | 56	20 | TUBE	Yes	NIPDAU	Level-2-260C-1 YEAR	0 to 70	SN75971B2

(1) **Status:** For more details on status, see our product life cycle.

(2) **Material type:** When designated, preproduction parts are prototypes/experimental devices, and are not yet approved or released for full production. Testing and final process, including without limitation quality assurance, reliability performance testing, and/or process qualification, may not yet be complete, and this item is subject to further changes or possible discontinuation. If available for ordering, purchases will be subject to an additional waiver at checkout, and are intended for early internal evaluation purposes only. These items are sold without warranties of any kind.

(3) **RoHS values:** Yes, No, RoHS Exempt. See the TI RoHS Statement for additional information and value definition.

(4) **Lead finish/Ball material:** Parts may have multiple material finish options. Finish options are separated by a vertical ruled line. Lead finish/Ball material values may wrap to two lines if the finish value exceeds the maximum column width.

(5) **MSL rating/Peak reflow:** The moisture sensitivity level ratings and peak solder (reflow) temperatures. In the event that a part has multiple moisture sensitivity ratings, only the lowest level per JEDEC standards is shown. Refer to the shipping label for the actual reflow temperature that will be used to mount the part to the printed circuit board.

(6) **Part marking:** There may be an additional marking, which relates to the logo, the lot trace code information, or the environmental category of the part.

Multiple part markings will be inside parentheses. Only one part marking contained in parentheses and separated by a "~" will appear on a part. If a line is indented then it is a continuation of the previous line and the two combined represent the entire part marking for that device.

Important Information and Disclaimer: The information provided on this page represents TI's knowledge and belief as of the date that it is provided. TI bases its knowledge and belief on information provided by third parties, and makes no representation or warranty as to the accuracy of such information. Efforts are underway to better integrate information from third parties. TI has taken and continues to take reasonable steps to provide representative and accurate information but may not have conducted destructive testing or chemical analysis on incoming materials and chemicals. TI and TI suppliers consider certain information to be proprietary, and thus CAS numbers and other limited information may not be available for release.

In no event shall TI's liability arising out of such information exceed the total purchase price of the TI part(s) at issue in this document sold by TI to Customer on an annual basis.

TUBE

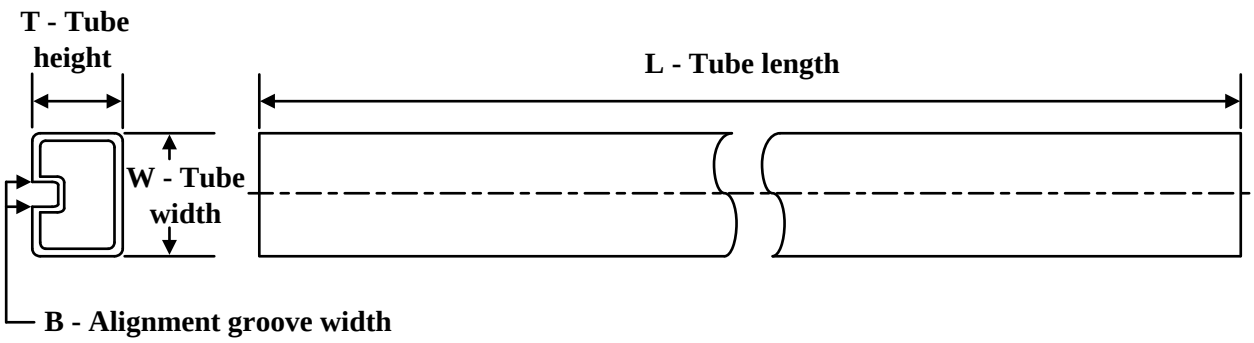

*All dimensions are nominal

Device	Package Name	Package Type	Pins	SPQ	L (mm)	W (mm)	T (µm)	B (mm)
SN75971B2DL	DL	SSOP	56	20	473.7	14.24	5110	7.87
SN75971B2DL.A	DL	SSOP	56	20	473.7	14.24	5110	7.87

IMPORTANT NOTICE AND DISCLAIMER

TI PROVIDES TECHNICAL AND RELIABILITY DATA (INCLUDING DATASHEETS), DESIGN RESOURCES (INCLUDING REFERENCE DESIGNS), APPLICATION OR OTHER DESIGN ADVICE, WEB TOOLS, SAFETY INFORMATION, AND OTHER RESOURCES “AS IS” AND WITH ALL FAULTS, AND DISCLAIMS ALL WARRANTIES, EXPRESS AND IMPLIED, INCLUDING WITHOUT LIMITATION ANY IMPLIED WARRANTIES OF MERCHANTABILITY, FITNESS FOR A PARTICULAR PURPOSE OR NON-INFRINGEMENT OF THIRD PARTY INTELLECTUAL PROPERTY RIGHTS.

These resources are intended for skilled developers designing with TI products. You are solely responsible for (1) selecting the appropriate TI products for your application, (2) designing, validating and testing your application, and (3) ensuring your application meets applicable standards, and any other safety, security, regulatory or other requirements.

These resources are subject to change without notice. TI grants you permission to use these resources only for development of an application that uses the TI products described in the resource. Other reproduction and display of these resources is prohibited. No license is granted to any other TI intellectual property right or to any third party intellectual property right. TI disclaims responsibility for, and you fully indemnify TI and its representatives against any claims, damages, costs, losses, and liabilities arising out of your use of these resources.

TI’s products are provided subject to TI’s Terms of Sale, TI’s General Quality Guidelines, or other applicable terms available either on ti.com or provided in conjunction with such TI products. TI’s provision of these resources does not expand or otherwise alter TI’s applicable warranties or warranty disclaimers for TI products. Unless TI explicitly designates a product as custom or customer-specified, TI products are standard, catalog, general purpose devices.

TI objects to and rejects any additional or different terms you may propose.

Copyright © 2026, Texas Instruments Incorporated

Last updated 10/2025