TL4051 Precision Micropower Shunt Voltage Reference

1 Features

- 1.225V fixed and adjustable (1.225V to 10V) outputs
- Tight output tolerances and low temperature coefficient
  - Max 0.1%, 50ppm/°C – A Grade
  - Max 0.2%, 50ppm/°C – B Grade
  - Max 0.5%, 50ppm/°C – C Grade
- Low output noise…20μV_{RMS} (typical)
- Wide operating current range… 60μA (typical) to 12mA
- Stable with all capacitive loads; No output capacitor required
- Available in
  - Industrial Temperature: –40°C to 85°C
  - Extended Temperature: –40°C to 125°C

2 Applications

- Data-acquisition systems
- Power supplies and power-supply monitors
- Instrumentation and Test Equipment
- Process control
- Precision audio
- Automotive electronics
- Energy management/metering
- Battery-powered equipment

3 Description

The TL4051 series of shunt voltage references are versatile easy-to-use references designed for a wide array of applications. The device is available in a fixed 1.225V output or an adjustable output whose voltage is determined by an external resistor divider. The device requires no external capacitors for operation and is stable with all capacitive loads. Additionally, the reference offers low dynamic impedance, low noise, and low temperature coefficient to maintain a stable output voltage over a wide range of operating currents and temperatures.

The TL4051 is offered in three initial tolerances, ranging from 0.1% (max) for the A grade to 0.5% (max) for the C grade. Thus, a great deal of flexibility is offered to designers in choosing the best cost-to-performance ratio for any application. Packaged in the space-saving SOT-23-3 and SC-70 packages and requiring a minimum current of 45μA (typical), the TL4051 also is an excellent choice for portable applications.

The TL4051xI is characterized for operation over an ambient temperature range of –40°C to 85°C. The TL4051xQ is characterized for operation over an ambient temperature range of –40°C to 125°C.

An IMPORTANT NOTICE at the end of this data sheet addresses availability, warranty, changes, use in safety-critical applications, intellectual property matters and other important disclaimers. PRODUCTION DATA.

Table of Contents

1 Features....1
2 Applications....1
3 Description....1
4 Pin Configuration and Functions....3
5 Specifications....4
5.1 Absolute Maximum Ratings [1]....4
5.2 ESD Ratings....4
5.3 Recommended Operating Conditions....4
5.4 TL4051x12I Electrical Characteristics....5
5.5 TL4051x12Q Electrical Characteristics....6
5.6 TL4051xI (Adjustable Version) Electrical Characteristics....7
5.7 TL4051xQ (Adjustable Version) Electrical Characteristics....8
5.8 Typical Characteristics....9
6 Detailed Description....12
6.1 Functional Block Diagram....12
7 Application Information....13
7.1 Output Capacitor....13
7.2 SOT-23 Pin Connections....13
7.3 Adjustable Version....14
7.4 Cathode and Load Currents....14
8 Device and Documentation Support....15
8.1 Ordering Information [1]....15
8.2 Ordering Information [1]....16
8.3 Receiving Notification of Documentation Updates....16
8.4 Support Resources....16
8.5 Trademarks....16
8.6 Electrostatic Discharge Caution....17
8.7 Glossary....17
9 Revision History....17
10 Mechanical, Packaging, and Orderable Information....18

Copyright © 2025 Texas Instruments Incorporated

4 Pin Configuration and Functions

1.2 V...DBZ (SOT-23-3) PACKAGE (TOP VIEW)

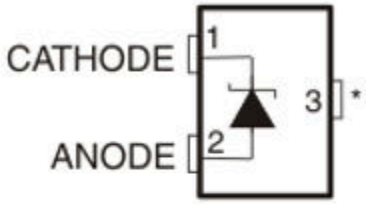

1.2 V...DCK (SC-70) PACKAGE (TOP VIEW)

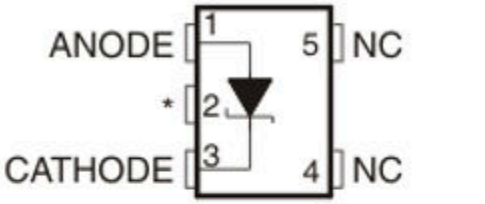

NC – No internal connection

Adjustable...DBZ (SOT-23-3) PACKAGE (TOP VIEW)

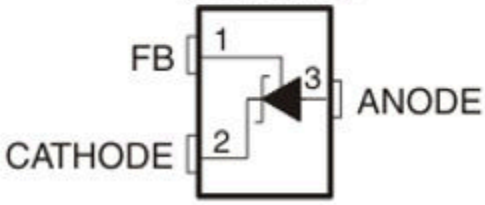

Adjustable...DCK (SC-70) PACKAGE (TOP VIEW)

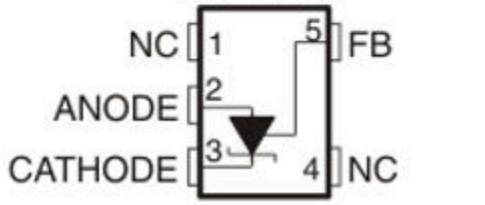

NC – No internal connection

***This pin must be connected to ANODE or left open. In applications with high electromagnetic interference (for example, when placed near transformers or other electromagnetic sources) or significant high-frequency switching noise, it is recommended to connect this pin to the anode.**

5 Specifications

5.1 Absolute Maximum Ratings [1]

over free-air temperature range (unless otherwise noted)

			MIN	MAX	UNIT
V_Z	Continuous cathode voltage			15	V
I_Z	Continuous cathode current		–10	20	mA
θ_{JA}	Package thermal impedance[2] [3]	DBZ package		206	°C/W
		DCK package		252	
T_J	Operating virtual junction temperature			150	°C
T_{stg}	Storage temperature range		–65	150	°C

(1) Stresses beyond those listed under *Absolute Maximum Ratings* may cause permanent damage to the device. These are stress ratings only, and functional operation of the device at these or any other conditions beyond those indicated under *Recommended Operating Conditions* is not implied. Exposure to absolute-maximum-rated conditions for extended periods may affect device reliability.
(2) Maximum power dissipation is a function of $T_J(max)$, θ_{JA}, and T_A. The maximum allowable power dissipation at any allowable ambient temperature is $P_D = (T_J(max) – T_A)/\theta_{JA}$. Operating at the absolute maximum T_J of 150°C can affect reliability.
(3) The package thermal impedance is calculated in accordance with JESD 51-7.

5.2 ESD Ratings

			VALUE	UNIT
$V_{(ESD)}$	Electrostatic discharge	Human-body model (HBM), per ANSI/ESDA/JEDEC JS-001[1] [2]	±2000	V
		Charged-device model (CDM), per JEDEC specification JESD22-C101[3]	±500	

(1) JEDEC document JEP155 states that 500V HBM allows safe manufacturing with a standard ESD control process.
(2) The human-body model is a 100pF capacitor discharged through a 1.5kΩ resistor into each pin. All pins are rated at 2kV for human-body model, but the feedback pin which is rated at 1kV.
(3) JEDEC document JEP157 states that 250V CDM allows safe manufacturing with a standard ESD control process. Manufacturing with less than 250V CDM is possible with the necessary precautions.

5.3 Recommended Operating Conditions

			MIN	MAX	UNIT
I_Z	Cathode current		[1]	12	mA
V_Z	Reverse breakdown voltage (adjustable version)			10	V
T_A	Free-air temperature	I temperature	–40	85	°C
		Q temperature	–40	125	

(1) See parametric tables

Copyright © 2025 Texas Instruments Incorporated

5.4 TL4051x12I Electrical Characteristics

full range T_A = –40°C to 85°C (unless otherwise noted)

PARAMETER		TEST CONDITIONS	T_A	TL4051A12I			TL4051B12I			TL4051C12I			UNIT
				MIN	TYP	MAX	MIN	TYP	MAX	MIN	TYP	MAX	
V_Z	Reverse breakdown voltage	I_Z = 100µA	25°C		1.225			1.225			1.225		V
	Reverse breakdown voltage tolerance	I_Z = 100µA	25°C	–1.2		1.2	–2.4		2.4	–6		6	mV
			Full range	–5.2		5.2	–6.4		6.4	–10.1		10.1	
$I_{Z,min}$	Minimum cathode current		25°C		39	60		39	60		39	60	µA
			Full range			65			65			65	
α_{VZ}	Average temperature coefficient of reverse breakdown voltage	I_Z = 10mA	25°C		±20			±20			±20		ppm/°C
		I_Z = 1mA	25°C		±15			±15			±15		
		I_Z = 100µA	25°C		±15			±15			±15		
			Full range			±50			±50			±50	
$\frac{\Delta V_Z}{\Delta I_Z}$	Reverse breakdown voltage change with cathode current change	$I_{Z,min} < I_Z < 1mA$	25°C		0.3	1.1		0.3	1.1		0.3	1.1	mV
			Full range			1.5			1.5			1.5	
		1mA < I_Z < 12mA	25°C		1.8	6		1.8	6		1.8	6	
			Full range			8			8			8	
Z_Z	Reverse dynamic impedance	I_Z = 1mA, f = 120Hz, I_{AC} = 0.1 I_Z	25°C		0.5			0.5			0.5		Ω
e_N	Wide band noise	I_Z = 100µA, 10Hz ≤ f ≤ 10kHz	25°C		20			20			20		$µV_{RMS}$
	Long-term stability of reverse breakdown voltage	t = 1000h, T_A = 25°C ± 0.1°C, I_Z = 100µA	25°C		120			120			120		ppm
V_{HYST}	Thermal hysteresis(1)	ΔT_A = –40°C to 125°C			0.36			0.36			0.36		mV/V

(1) Thermal hysteresis is defined as $V_{Z,25°C}$ (after cycling to –40°C) – $V_{Z,25°C}$ (after cycling to 125°C).

5.5 TL4051x12Q Electrical Characteristics

full range T_A = –40°C to 125°C (unless otherwise noted)

PARAMETER		TEST CONDITIONS	T_A	TL4051A12Q			TL4051B12Q			TL4051C12Q			UNIT
				MIN	TYP	MAX	MIN	TYP	MAX	MIN	TYP	MAX	
V_Z	Reverse breakdown voltage	I_Z = 100µA	25°C		1.225			1.225			1.225		V
	Reverse breakdown voltage tolerance	I_Z = 100µA	25°C	–1.2		1.2	–2.4		2.4	–6		6	mV
			Full range	–7.4		7.4	–8.6		8.6	–12.2		12.2	
$I_{Z,min}$	Minimum cathode current		25°C		39	60		39	60		39	60	µA
			Full range			65			65			65	
α_{VZ}	Average temperature coefficient of reverse breakdown voltage	I_Z = 10mA	25°C		±20			±20			±20		ppm/°C
		I_Z = 1mA	25°C		±15			±15			±15		
		I_Z = 100µA	25°C		±15			±15			±15		
			Full range			±50			±50			±50	
$\frac{\Delta V_Z}{\Delta I_Z}$	Reverse breakdown voltage change with cathode current change	$I_{Z,min} < I_Z < 1mA$	25°C		0.3	1.1		0.3	1.1		0.3	1.1	mV
			Full range			1.5			1.5			1.5	
		1mA < I_Z < 12mA	25°C		1.8	6		1.8	6		1.8	6	
			Full range			8			8			8	
Z_Z	Reverse dynamic impedance	I_Z = 1mA, f = 120Hz, I_{AC} = 0.1 I_Z	25°C		0.5			0.5			0.5		Ω
e_N	Wide band noise	I_Z = 100µA, 10Hz ≤ f ≤ 10kHz	25°C		20			20			20		$µV_{RMS}$
	Long-term stability of reverse breakdown voltage	t = 1000 h, T_A = 25°C ± 0.1°C, I_Z = 100µA	25°C		120			120			120		ppm
V_{HYST}	Thermal hysteresis(1)	ΔT_A = –40°C to 125°C			0.36			0.36			0.36		mV/V

Copyright © 2025 Texas Instruments Incorporated

5.6 TL4051xI (Adjustable Version) Electrical Characteristics

full range T_A = –40°C to 85°C (unless otherwise noted)

PARAMETER		TEST CONDITIONS	T_A	TL4051AI			TL4051BI			TL4051CI			UNIT
				MIN	TYP	MAX	MIN	TYP	MAX	MIN	TYP	MAX	
V_{REF}	Reference voltage	I_Z = 100µA, V_Z = 5V	25°C		1.212			1.212			1.212		V
	Reference voltage tolerance(1)	I_Z = 100µA, V_Z = 5V	25°C	–1.2		1.2	–2.4		2.4	–6		6	mV
			Full range	–5.2		5.2	–6.4		6.4	–10.1		10.1	
$I_{Z,min}$	Minimum cathode current		25°C		36	60		36	60		36	65	µA
			Full range			65			65			70	
$\frac{\Delta V_{REF}}{\Delta I_Z}$	Reference voltage change with cathode current change	$I_{Z,min} < I_Z < 1mA$	25°C		0.3	1.1		0.3	1.1		0.3	1.1	mV
			Full range			1.5			1.5			1.5	
		1mA < I_Z < 12mA	25°C		0.6	6		0.6	6		0.6	6	
			Full range			8			8			8	
$\frac{\Delta V_{REF}}{\Delta V_{KA}}$	Reference voltage change with output voltage change	I_Z = 1mA	25°C		–1.69	–2.8		–1.69	–2.8		–1.69	–2.8	mV/V
			Full range			–3.5			–3.5			–3.5	
I_{FB}	Feedback current		25°C		70	130		70	130		70	130	nA
			Full range			150			150			150	
αV_{REF}	Average temperature coefficient of reference voltage(1)	I_Z = 10mA, V_Z = 2.5V	25°C		±20			±20			±20		ppm/°C
		I_Z = 1mA, V_Z = 2.5V	25°C		±15			±15			±15		
		I_Z = 100µA, V_Z = 2.5V	25°C		±15			±15			±15		
			Full range			±50			±50			±50	
Z_Z	Reverse dynamic impedance	I_Z = 1mA, f = 120Hz, I_{AC} = 0.1 I_Z, V_Z = V_{REF}	25°C		0.3			0.3			0.3		Ω
		I_Z = 1mA, f = 120Hz, I_{AC} = 0.1 I_Z, V_Z = 10V	25°C		2			2			2		
e_N	Wide band noise	I_Z = 100µA, V_Z = V_{REF}, 10Hz ≤ f ≤ 10kHz	25°C		20			20			20		$µV_{RMS}$
	Long-term stability of reverse breakdown voltage	t = 1000 h, T_A = 25°C ± 0.1°C, I_Z = 100µA	25°C		120			120			120		ppm
V_{HYST}	Thermal hysteresis(2)	ΔT_A = –40°C to 125°C			0.3			0.3			0.3		mV/V

(1) Reference voltage tolerance and average temperature coefficient change with output voltage (V_Z). See *Typical Characteristics*.
(2) Thermal hysteresis is defined as $V_{Z,25°C}$ (after cycling to –40°C) – $V_{Z,25°C}$ (after cycling to 125°C).

5.7 TL4051xQ (Adjustable Version) Electrical Characteristics

full range T_A = –40°C to 125°C (unless otherwise noted)

PARAMETER		TEST CONDITIONS	T_A	TL4051AQ			TL4051BQ			TL4051CQ			UNIT
				MIN	TYP	MAX	MIN	TYP	MAX	MIN	TYP	MAX	
V_{REF}	Reference voltage	I_Z = 100µA, V_Z = 5V	25°C		1.212			1.212			1.212		V
	Reference voltage tolerance(1)	I_Z = 100µA, V_Z = 5V	25°C	–1.2		1.2	–2.4		2.4	–6		6	mV
			Full range	–7.4		7.4	–8.6		8.6	–12.2		12.2	
$I_{Z,min}$	Minimum cathode current		25°C		36	60		36	60		36	65	µA
			Full range			70			70			75	
$\frac{\Delta V_{REF}}{\Delta I_Z}$	Reference voltage change with cathode current change	$I_{Z,min} < I_Z < 1mA$	25°C		0.3	1.1		0.3	1.1		0.3	1.1	mV
			Full range			1.5			1.5			1.5	
		1mA < I_Z < 12mA	25°C		0.6	6		0.6	6		0.6	6	
			Full range			8			8			8	
$\frac{\Delta V_{REF}}{\Delta V_{KA}}$	Reference voltage change with output voltage change	I_Z = 1mA	25°C		–1.69	–2.8		–1.69	–2.8		–1.69	–2.8	mV/V
			Full range			–3.5			–3.5			–3.5	
I_{FB}	Feedback current		25°C		70	130		70	130		70	130	nA
			Full range			150			150			150	
αV_{REF}	Average temperature coefficient of reference voltage(1)	I_Z = 10mA, V_Z = 2.5V	25°C		±20			±20			±20		ppm/°C
		I_Z = 1mA, V_Z = 2.5V	25°C		±15			±15			±15		
		I_Z = 100µA, V_Z = 2.5V	25°C		±15			±15			±15		
			Full range			±50			±50			±50	
Z_Z	Reverse dynamic impedance	I_Z = 1mA, f = 120Hz, I_{AC} = 0.1 I_Z, V_Z = V_{REF}	25°C		0.3			0.3			0.3		Ω
		I_Z = 1mA, f = 120Hz, I_{AC} = 0.1 I_Z, V_Z = 10V	25°C		2			2			2		
e_N	Wide band noise	I_Z = 100µA, V_Z = V_{REF}, 10Hz ≤ f ≤ 10kHz	25°C		20			20			20		μV_{RMS}
	Long-term stability of reverse breakdown voltage	t = 1000 h, T_A = 25°C ± 0.1°C, I_Z = 100µA	25°C		120			120			120		ppm
V_{HYST}	Thermal hysteresis(1)	ΔT_A = –40°C to 125°C			0.3			0.3			0.3		mV/V

(1) Thermal hysteresis is defined as $V_{Z,25°C}$ (after cycling to –40°C) – $V_{Z,25°C}$ (after cycling to 125°C).

Copyright © 2025 Texas Instruments Incorporated

5.8 Typical Characteristics

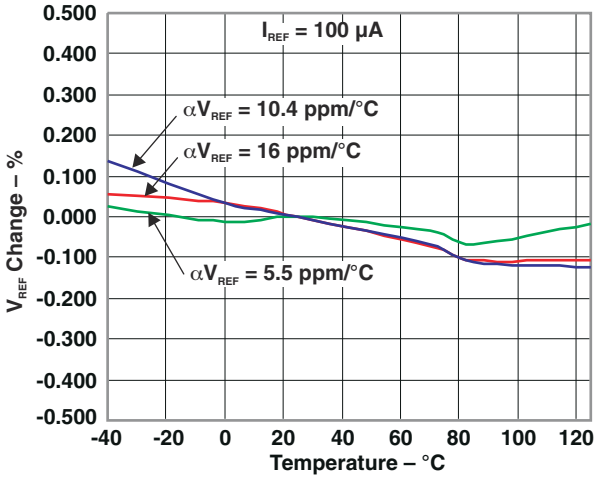

Figure 5-1. Temperature Drift For Different Average Temperature Coefficients

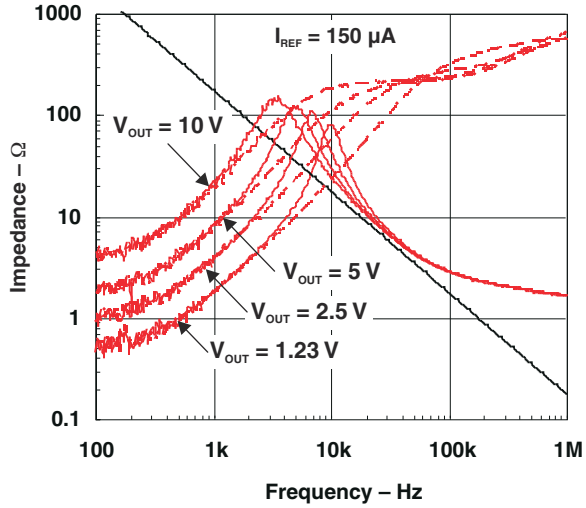

Figure 5-2. Output Impedance vs Frequency

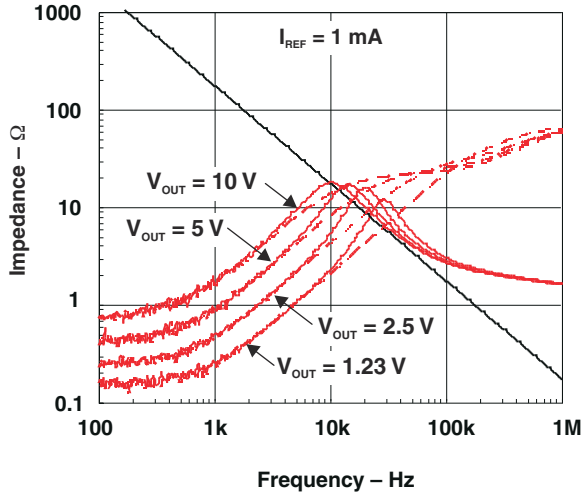

Figure 5-3. Output Impedance vs Frequency

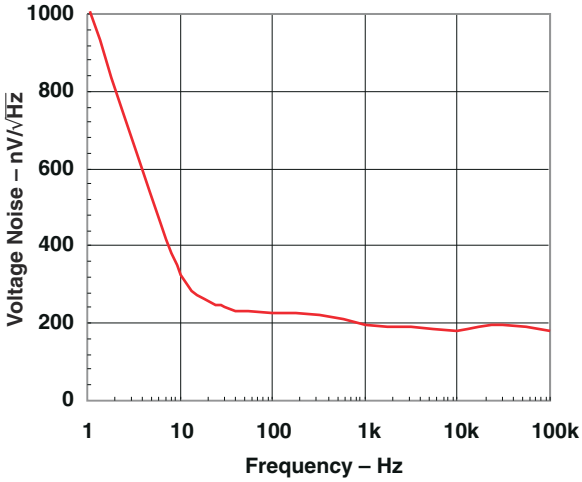

Figure 5-4. Noise Voltage vs Frequency

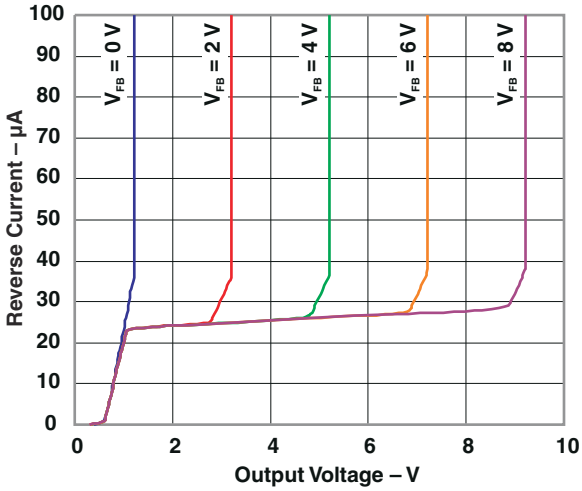

Figure 5-5. Reverse Characteristics

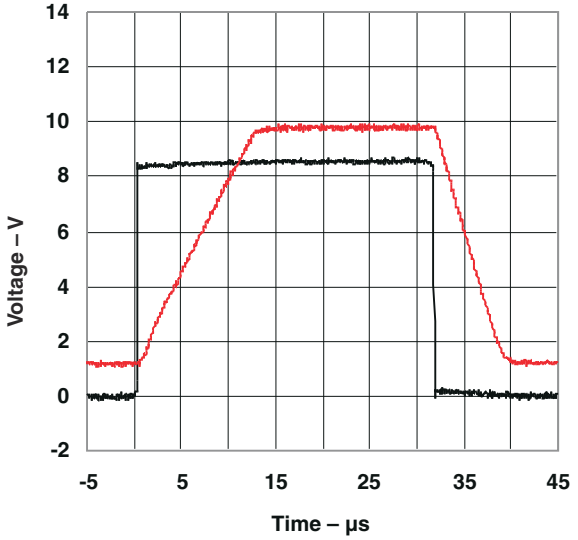

Figure 5-6. Large Signal Pulse Response

Copyright © 2025 Texas Instruments Incorporated

5.8 Typical Characteristics (continued)

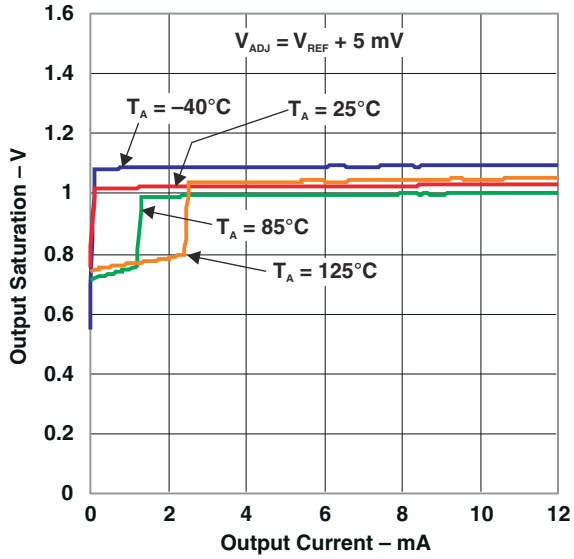

Figure 5-7. Output Saturation vs Output Current

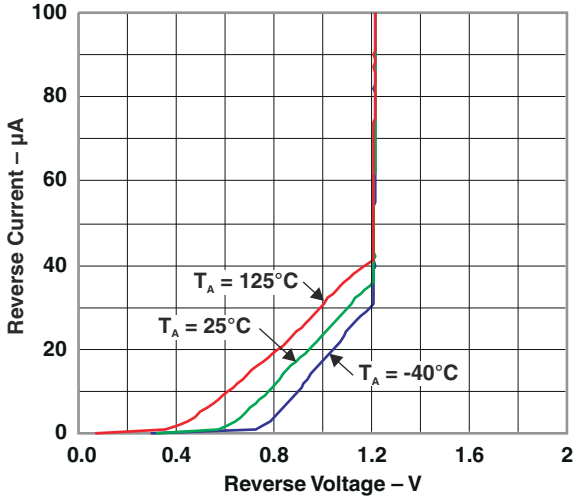

Figure 5-8. Reverse Current vs Reverse Voltage

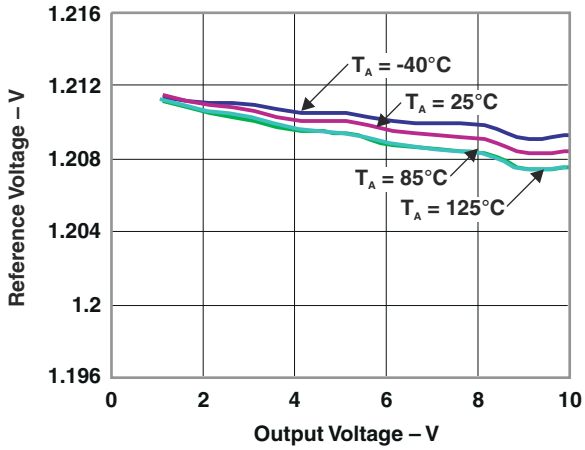

Figure 5-9. Reference Voltage vs Output Voltage

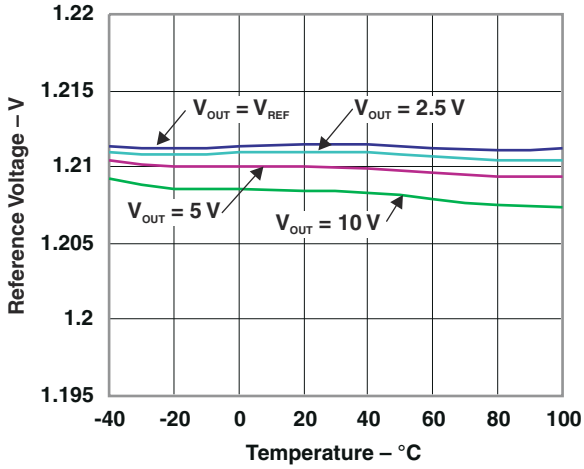

Figure 5-10. Reference Voltage vs Temperature

Copyright © 2025 Texas Instruments Incorporated

5.8 Typical Characteristics (continued)

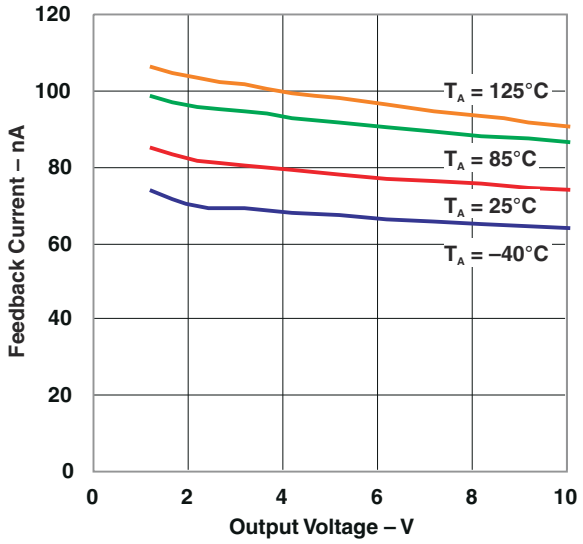

Figure 5-11. Feedback Current vs Output Voltage

6 Detailed Description

6.1 Functional Block Diagram

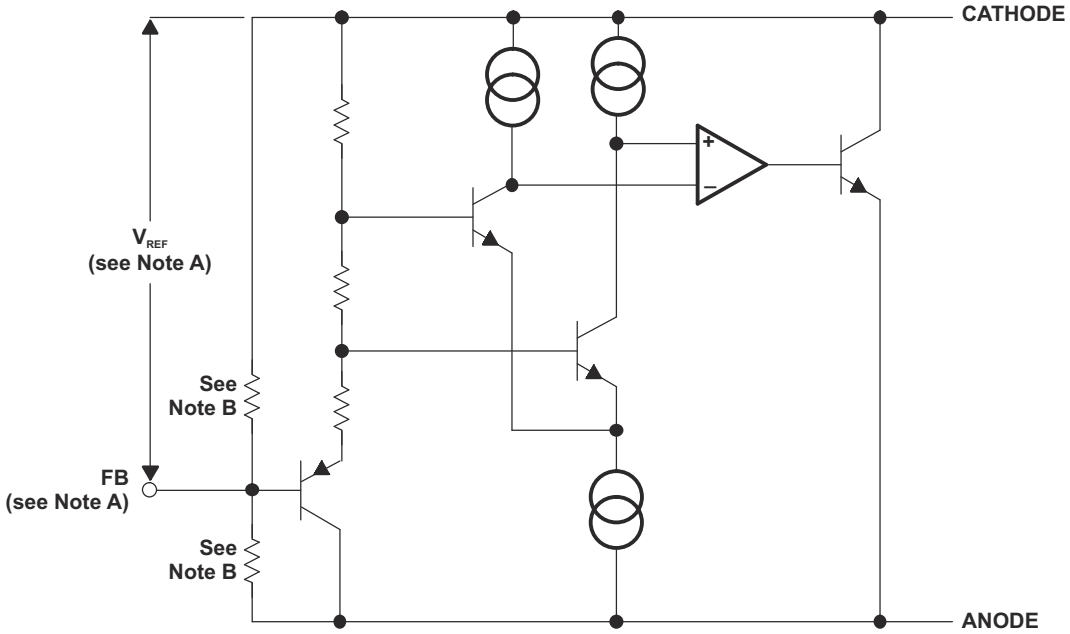

A. TL4051x (Adjustable) only
B. TL4051x12 only

Copyright © 2025 Texas Instruments Incorporated

7 Application Information

Note

Information in the following applications sections is not part of the TI component specification, and TI does not warrant its accuracy or completeness. TI's customers are responsible for determining suitability of components for their purposes, as well as validating and testing their design implementation to confirm system functionality.

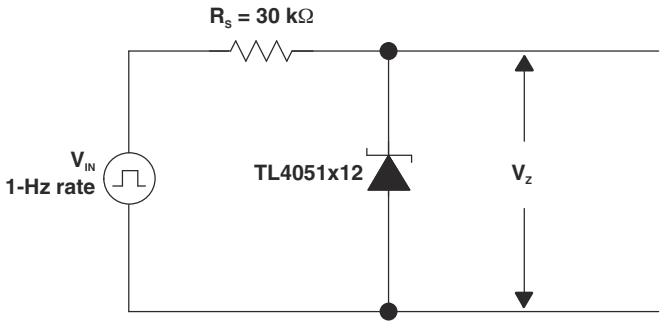

Figure 7-1. Start-Up Characteristics Test Circuit

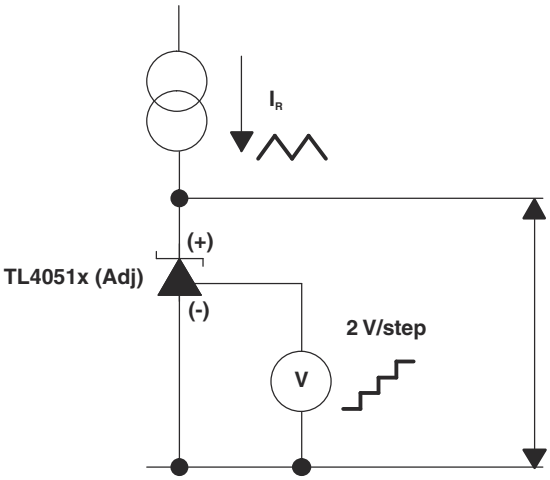

Figure 7-2. Reverse Characteristics Test Circuit

7.1 Output Capacitor

The TL4051 does not require an output capacitor across CATHODE and ANODE for stability. However, if an output bypass capacitor is desired, the TL4051 is designed to be stable with all capacitive loads.

7.2 SOT-23 Pin Connections

There is a parasitic Schottky diode connected between pins 2 and 3 of the SOT-23 packaged device. Thus, pin 3 of the SOT-23 package must be left floating or connected to pin 2.

Copyright © 2025 Texas Instruments Incorporated

7.3 Adjustable Version

The adjustable version allows V_Z to be set by a user-defined resistor divider. The output voltage, V_Z, is set according to the equation shown in Figure 7-3.

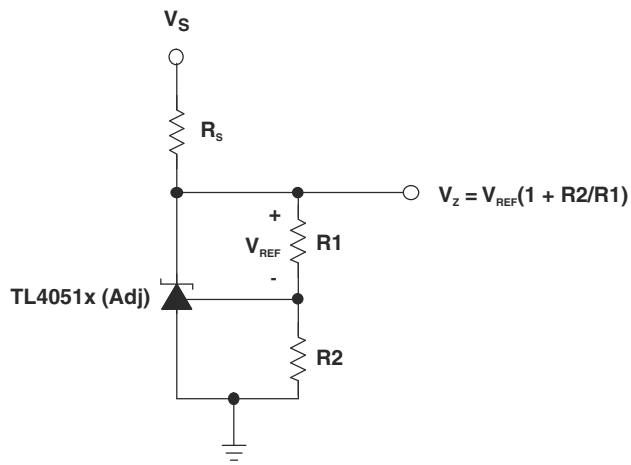

Figure 7-3. Adjustable Shunt Regulator

When the output voltage, VZ, is set below 2.5V on adjustable versions of TL4051, the device can experience increased reference voltage change with output voltage change (ΔVREF/ΔVKA) when compared to output voltages set equal to or above 2.5V

7.4 Cathode and Load Currents

In a typical shunt regulator configuration (see Figure 7-4), an external resistor, R_S, is connected between the supply and the cathode of the TL4051. R_S must be set properly, as it sets the total current available to supply the load (I_L) and bias the TL4051 (I_Z). In all cases, I_Z must stay within a specified range for proper operation of the reference. Taking into consideration one extreme in the variation of the load and supply voltage (maximum I_L and minimum V_S), R_S must be small enough to supply the minimum I_Z required for operation of the regulator, as given by data sheet parameters. At the other extreme, maximum V_S and minimum I_L, R_S must be large enough to limit I_Z to less than its maximum recommended rating of 12 mA.

R_S is calculated as shown in Equation 1.

$$R_S = \frac{(V_S - V_Z)}{(I_L + I_Z)} \tag{1}$$

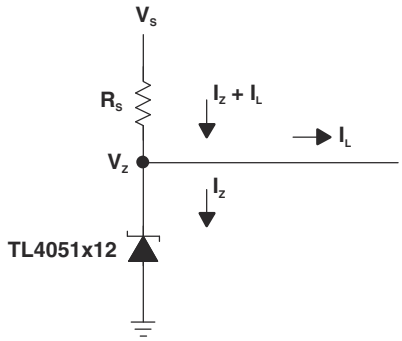

Figure 7-4. Shunt Regulator

Copyright © 2025 Texas Instruments Incorporated

8 Device and Documentation Support

8.1 Ordering Information (1)

Table 8-1. Ordering Information (1)

T_A	DEVICE GRADE	V_Z	PACKAGE(2)		ORDERABLE PART NUMBER	TOP-SIDE MARKING(3)
–40°C to 85°C	A grade: 0.1% initial accuracy and 50ppm/°C temperature coefficient	ADJ	SOT-23-3 – DBZ	Reel of 3000	TL4051AIDBZR	TN2_
				Reel of 250	TL4051AIDBZT	
			SC-70 – DCK	Reel of 3000	TL4051AIDCKR	97_
				Reel of 250	TL4051AIDCKT	
		1.2V	SOT-23-3 – DBZ	Reel of 3000	TL4051A12IDBZR	TN8_
				Reel of 250	TL4051A12IDBZT	
			SC-70 – DCK	Reel of 3000	TL4051A12IDCKR	9D_
				Reel of 250	TL4051A12IDCKT	
	B grade: 0.2% initial accuracy and 50ppm/°C temperature coefficient	ADJ	SOT-23-3 – DBZ	Reel of 3000	TL4051BIDBZR	TN3_
				Reel of 250	TL4051BIDBZT	
			SC-70 – DCK	Reel of 3000	TL4051BIDCKR	98_
				Reel of 250	TL4051BIDCKT	
		1.2V	SOT-23-3 – DBZ	Reel of 3000	TL4051B12IDBZR	TN9_
				Reel of 250	TL4051B12IDBZT	
			SC-70 – DCK	Reel of 3000	TL4051B12IDCKR	9E_
				Reel of 250	TL4051B12IDCKT	
	C grade: 0.5% initial accuracy and 50ppm/°C temperature coefficient	ADJ	SOT-23-3 – DBZ	Reel of 3000	TL4051CIDBZR	TN4_
				Reel of 250	TL4051CIDBZT	
			SC-70 – DCK	Reel of 3000	TL4051CIDCKR	99_
				Reel of 250	TL4051CIDCKT	
		1.2V	SOT-23-3 – DBZ	Reel of 3000	TL4051C12IDBZR	TNU_
				Reel of 250	TL4051C12IDBZT	
			SC-70 – DCK	Reel of 3000	TL4051C12IDCKR	9F_
				Reel of 250	TL4051C12IDCKT	

(1) For the most current package and ordering information, see the Package Option Addendum at the end of this document, or see the TI web site at www.ti.com.
(2) Package drawings, standard packing quantities, thermal data, symbolization, and PCB design guidelines are available at www.ti.com/sc/package.
(3) The actual top-side marking has one additional character that designates the assembly/test site.

8.2 Ordering Information [1]

Table 8-2. Ordering Information [1]

T_A	DEVICE GRADE	V_Z	PACKAGE[2]		ORDERABLE PART NUMBER	TOP-SIDE MARKING[3]
–40°C to 125°C	A grade: 0.1% initial accuracy and 50ppm/°C temperature coefficient	ADJ	SOT-23-3 – DBZ	Reel of 3000	TL4051AQDBZR	TN5_
				Reel of 250	TL4051AQDBZT	
			SC-70 – DCK	Reel of 3000	TL4051AQDCKR	9A_
				Reel of 250	TL4051AQDCKT	
		1.2V	SOT-23-3 – DBZ	Reel of 3000	TL4051A12QDBZR	TNV_
				Reel of 250	TL4051A12QDBZT	
			SC-70 – DCK	Reel of 3000	TL4051A12QDCKR	9G_
				Reel of 250	TL4051A12QDCKT	
	B grade: 0.2% initial accuracy and 50ppm/°C temperature coefficient	ADJ	SOT-23-3 – DBZ	Reel of 3000	TL4051BQDBZR	TN6_
				Reel of 250	TL4051BQDBZT	
			SC-70 – DCK	Reel of 3000	TL4051BQDCKR	9B_
				Reel of 250	TL4051BQDCKT	
		1.2V	SOT-23-3 – DBZ	Reel of 3000	TL4051B12QDBZR	TNW_
				Reel of 250	TL4051B12QDBZT	
			SC-70 – DCK	Reel of 3000	TL4051B12QDCKR	9H_
				Reel of 250	TL4051B12QDCKT	
	C grade: 0.5% initial accuracy and 50ppm/°C temperature coefficient	ADJ	SOT-23-3 – DBZ	Reel of 3000	TL4051CQDBZR	TN7_
				Reel of 250	TL4051CQDBZT	
			SC-70 – DCK	Reel of 3000	TL4051CQDCKR	9C_
				Reel of 250	TL4051CQDCKT	
		1.2V	SOT-23-3 – DBZ	Reel of 3000	TL4051C12QDBZR	TNY_
				Reel of 250	TL4051C12QDBZT	
			SC-70 – DCK	Reel of 3000	TL4051C12QDCKR	9J_
				Reel of 250	TL4051C12QDCKT	

(1) For the most current package and ordering information, see the Package Option Addendum at the end of this document, or see the TI web site at www.ti.com.
(2) Package drawings, standard packing quantities, thermal data, symbolization, and PCB design guidelines are available at www.ti.com/sc/package.
(3) The actual top-side marking has one additional character that designates the assembly/test site.

8.3 Receiving Notification of Documentation Updates

To receive notification of documentation updates, navigate to the device product folder on ti.com. Click on *Notifications* to register and receive a weekly digest of any product information that has changed. For change details, review the revision history included in any revised document.

8.4 Support Resources

TI E2E™ support forums are an engineer's go-to source for fast, verified answers and design help — straight from the experts. Search existing answers or ask your own question to get the quick design help you need.

Linked content is provided "AS IS" by the respective contributors. They do not constitute TI specifications and do not necessarily reflect TI's views; see TI's Terms of Use.

8.5 Trademarks

TI E2E™ is a trademark of Texas Instruments.
All trademarks are the property of their respective owners.

Copyright © 2025 Texas Instruments Incorporated

8.6 Electrostatic Discharge Caution

This integrated circuit can be damaged by ESD. Texas Instruments recommends that all integrated circuits be handled with appropriate precautions. Failure to observe proper handling and installation procedures can cause damage.

ESD damage can range from subtle performance degradation to complete device failure. Precision integrated circuits may be more susceptible to damage because very small parametric changes could cause the device not to meet its published specifications.

8.7 Glossary

TI Glossary This glossary lists and explains terms, acronyms, and definitions.

9 Revision History

NOTE: Page numbers for previous revisions may differ from page numbers in the current version.

Changes from Revision * (June 2007) to Revision A (March 2025)	Page
• Updated the numbering format for tables, figures, and cross-references throughout the document	1
• Added information about device behavior in high EMI environments	1
• Added ESD ratings	4
• Added information about device behavior with cathode voltage <2.5V	14

10 Mechanical, Packaging, and Orderable Information

The following pages include mechanical, packaging, and orderable information. This information is the most current data available for the designated devices. This data is subject to change without notice and revision of this document. For browser-based versions of this data sheet, refer to the left-hand navigation.

Copyright © 2025 Texas Instruments Incorporated

PACKAGING INFORMATION

Orderable part number	Status (1)	Material type (2)	Package | Pins	Package qty | Carrier	RoHS (3)	Lead finish/ Ball material (4)	MSL rating/ Peak reflow (5)	Op temp (°C)	Part marking (6)
TL4051A12IDBZR	Active	Production	SOT-23 (DBZ) | 3	3000 | LARGE T&R	Yes	NIPDAU | SN	Level-1-260C-UNLIM	-40 to 85	TN8U
TL4051A12IDBZR.A	Active	Production	SOT-23 (DBZ) | 3	3000 | LARGE T&R	Yes	SN	Level-1-260C-UNLIM	-40 to 85	TN8U
TL4051A12IDBZT	Active	Production	SOT-23 (DBZ) | 3	250 | SMALL T&R	Yes	NIPDAU | SN	Level-1-260C-UNLIM	-40 to 85	TN8U
TL4051A12IDBZT.A	Active	Production	SOT-23 (DBZ) | 3	250 | SMALL T&R	Yes	SN	Level-1-260C-UNLIM	-40 to 85	TN8U
TL4051A12QDBZR	Active	Production	SOT-23 (DBZ) | 3	3000 | LARGE T&R	Yes	NIPDAU | SN	Level-1-260C-UNLIM	-40 to 125	TNVU
TL4051A12QDBZR.A	Active	Production	SOT-23 (DBZ) | 3	3000 | LARGE T&R	Yes	SN	Level-1-260C-UNLIM	-40 to 125	TNVU
TL4051A12QDBZT	Active	Production	SOT-23 (DBZ) | 3	250 | SMALL T&R	Yes	NIPDAU | SN	Level-1-260C-UNLIM	-40 to 125	TNVU
TL4051A12QDBZT.A	Active	Production	SOT-23 (DBZ) | 3	250 | SMALL T&R	Yes	SN	Level-1-260C-UNLIM	-40 to 125	TNVU
TL4051A12QDCKR	Active	Production	SC70 (DCK) | 5	3000 | LARGE T&R	Yes	NIPDAU | POST-PLAT AG SPOT	Level-1-260C-UNLIM	-40 to 125	9GU
TL4051A12QDCKR.A	Active	Production	SC70 (DCK) | 5	3000 | LARGE T&R	Yes	POST-PLAT AG SPOT	Level-1-260C-UNLIM	-40 to 125	9GU
TL4051A12QDCKRG4	Active	Production	SC70 (DCK) | 5	3000 | LARGE T&R	Yes	NIPDAU	Level-1-260C-UNLIM	-40 to 125	9GU
TL4051A12QDCKRG4.A	Active	Production	SC70 (DCK) | 5	3000 | LARGE T&R	Yes	NIPDAU	Level-1-260C-UNLIM	-40 to 125	9GU
TL4051AIDBZR	Active	Production	SOT-23 (DBZ) | 3	3000 | LARGE T&R	Yes	NIPDAU | SN	Level-1-260C-UNLIM	-40 to 85	TN2U
TL4051AIDBZR.A	Active	Production	SOT-23 (DBZ) | 3	3000 | LARGE T&R	Yes	SN	Level-1-260C-UNLIM	-40 to 85	TN2U
TL4051AIDBZT	Active	Production	SOT-23 (DBZ) | 3	250 | SMALL T&R	Yes	NIPDAU | SN	Level-1-260C-UNLIM	-40 to 85	TN2U
TL4051AIDBZT.A	Active	Production	SOT-23 (DBZ) | 3	250 | SMALL T&R	Yes	SN	Level-1-260C-UNLIM	-40 to 85	TN2U
TL4051AIDCKR	Active	Production	SC70 (DCK) | 5	3000 | LARGE T&R	Yes	NIPDAU | POST-PLAT AG SPOT	Level-1-260C-UNLIM	-40 to 85	97U
TL4051AIDCKR.A	Active	Production	SC70 (DCK) | 5	3000 | LARGE T&R	Yes	POST-PLAT AG SPOT	Level-1-260C-UNLIM	-40 to 85	97U
TL4051AQDBZR	Active	Production	SOT-23 (DBZ) | 3	3000 | LARGE T&R	Yes	NIPDAU | SN	Level-1-260C-UNLIM	-40 to 125	TN5U
TL4051AQDBZR.A	Active	Production	SOT-23 (DBZ) | 3	3000 | LARGE T&R	Yes	SN	Level-1-260C-UNLIM	-40 to 125	TN5U
TL4051AQDCKR	Active	Production	SC70 (DCK) | 5	3000 | LARGE T&R	Yes	NIPDAU | POST-PLAT AG SPOT	Level-1-260C-UNLIM	-40 to 125	9AU
TL4051AQDCKR.A	Active	Production	SC70 (DCK) | 5	3000 | LARGE T&R	Yes	POST-PLAT AG SPOT	Level-1-260C-UNLIM	-40 to 125	9AU
TL4051B12IDBZR	Active	Production	SOT-23 (DBZ) | 3	3000 | LARGE T&R	Yes	NIPDAU | SN	Level-1-260C-UNLIM	-40 to 85	(TN93, TN9U)
TL4051B12IDBZR.A	Active	Production	SOT-23 (DBZ) | 3	3000 | LARGE T&R	Yes	SN	Level-1-260C-UNLIM	-40 to 85	(TN93, TN9U)
TL4051B12IDBZT	Active	Production	SOT-23 (DBZ) | 3	250 | SMALL T&R	Yes	NIPDAU | SN	Level-1-260C-UNLIM	-40 to 85	(TN93, TN9U)
TL4051B12IDBZT.A	Active	Production	SOT-23 (DBZ) | 3	250 | SMALL T&R	Yes	SN	Level-1-260C-UNLIM	-40 to 85	(TN93, TN9U)
TL4051B12QDBZR	Active	Production	SOT-23 (DBZ) | 3	3000 | LARGE T&R	Yes	NIPDAU | SN	Level-1-260C-UNLIM	-40 to 125	(TNW3, TNWU)

Orderable part number	Status (1)	Material type (2)	Package | Pins	Package qty | Carrier	RoHS (3)	Lead finish/ Ball material (4)	MSL rating/ Peak reflow (5)	Op temp (°C)	Part marking (6)
TL4051B12QDBZR.A	Active	Production	SOT-23 (DBZ) | 3	3000 | LARGE T&R	Yes	SN	Level-1-260C-UNLIM	-40 to 125	(TNW3, TNWU)
TL4051B12QDCKR	Active	Production	SC70 (DCK) | 5	3000 | LARGE T&R	Yes	NIPDAU | POST-PLAT AG SPOT	Level-1-260C-UNLIM	-40 to 125	9HU
TL4051B12QDCKR.A	Active	Production	SC70 (DCK) | 5	3000 | LARGE T&R	Yes	POST-PLAT AG SPOT	Level-1-260C-UNLIM	-40 to 125	9HU
TL4051BIDBZR	Active	Production	SOT-23 (DBZ) | 3	3000 | LARGE T&R	Yes	NIPDAU | SN	Level-1-260C-UNLIM	-40 to 85	TN3U
TL4051BIDBZR.A	Active	Production	SOT-23 (DBZ) | 3	3000 | LARGE T&R	Yes	SN	Level-1-260C-UNLIM	-40 to 85	TN3U
TL4051BIDBZT	Active	Production	SOT-23 (DBZ) | 3	250 | SMALL T&R	Yes	NIPDAU | SN	Level-1-260C-UNLIM	-40 to 85	TN3U
TL4051BIDBZT.A	Active	Production	SOT-23 (DBZ) | 3	250 | SMALL T&R	Yes	SN	Level-1-260C-UNLIM	-40 to 85	TN3U
TL4051BIDCKR	Active	Production	SC70 (DCK) | 5	3000 | LARGE T&R	Yes	NIPDAU | POST-PLAT AG SPOT	Level-1-260C-UNLIM	-40 to 85	98U
TL4051BIDCKR.A	Active	Production	SC70 (DCK) | 5	3000 | LARGE T&R	Yes	POST-PLAT AG SPOT	Level-1-260C-UNLIM	-40 to 85	98U
TL4051BQDBZR	Active	Production	SOT-23 (DBZ) | 3	3000 | LARGE T&R	Yes	NIPDAU | SN	Level-1-260C-UNLIM	-40 to 125	TN6U
TL4051BQDBZR.A	Active	Production	SOT-23 (DBZ) | 3	3000 | LARGE T&R	Yes	SN	Level-1-260C-UNLIM	-40 to 125	TN6U
TL4051BQDCKR	Active	Production	SC70 (DCK) | 5	3000 | LARGE T&R	Yes	NIPDAU | POST-PLAT AG SPOT	Level-1-260C-UNLIM	-40 to 125	9BU
TL4051BQDCKR.A	Active	Production	SC70 (DCK) | 5	3000 | LARGE T&R	Yes	POST-PLAT AG SPOT	Level-1-260C-UNLIM	-40 to 125	9BU
TL4051BQDCKRG4	NRND	Production	SC70 (DCK) | 5	3000 | LARGE T&R	Yes	NIPDAU	Level-1-260C-UNLIM	-40 to 125	9BU
TL4051BQDCKRG4.A	NRND	Production	SC70 (DCK) | 5	3000 | LARGE T&R	Yes	NIPDAU	Level-1-260C-UNLIM	-40 to 125	9BU
TL4051C12IDBZR	Active	Production	SOT-23 (DBZ) | 3	3000 | LARGE T&R	Yes	NIPDAU | SN	Level-1-260C-UNLIM	-40 to 85	TNUU
TL4051C12IDBZR.A	Active	Production	SOT-23 (DBZ) | 3	3000 | LARGE T&R	Yes	SN	Level-1-260C-UNLIM	-40 to 85	TNUU
TL4051C12IDBZT	Active	Production	SOT-23 (DBZ) | 3	250 | SMALL T&R	Yes	NIPDAU | SN	Level-1-260C-UNLIM	-40 to 85	TNUU
TL4051C12IDBZT.A	Active	Production	SOT-23 (DBZ) | 3	250 | SMALL T&R	Yes	SN	Level-1-260C-UNLIM	-40 to 85	TNUU
TL4051C12IDCKR	Active	Production	SC70 (DCK) | 5	3000 | LARGE T&R	Yes	NIPDAU | POST-PLAT AG SPOT	Level-1-260C-UNLIM	-40 to 85	9FU
TL4051C12IDCKR.A	Active	Production	SC70 (DCK) | 5	3000 | LARGE T&R	Yes	POST-PLAT AG SPOT	Level-1-260C-UNLIM	-40 to 85	9FU
TL4051C12QDBZR	Active	Production	SOT-23 (DBZ) | 3	3000 | LARGE T&R	Yes	NIPDAU | SN	Level-1-260C-UNLIM	-40 to 125	TNYU
TL4051C12QDBZR.A	Active	Production	SOT-23 (DBZ) | 3	3000 | LARGE T&R	Yes	SN	Level-1-260C-UNLIM	-40 to 125	TNYU
TL4051C12QDBZT	Active	Production	SOT-23 (DBZ) | 3	250 | SMALL T&R	Yes	NIPDAU | SN	Level-1-260C-UNLIM	-40 to 125	TNYU
TL4051C12QDBZT.A	Active	Production	SOT-23 (DBZ) | 3	250 | SMALL T&R	Yes	SN	Level-1-260C-UNLIM	-40 to 125	TNYU
TL4051C12QDCKR	Active	Production	SC70 (DCK) | 5	3000 | LARGE T&R	Yes	NIPDAU | POST-PLAT AG SPOT	Level-1-260C-UNLIM	-40 to 125	9JU
TL4051C12QDCKR.A	Active	Production	SC70 (DCK) | 5	3000 | LARGE T&R	Yes	POST-PLAT AG SPOT	Level-1-260C-UNLIM	-40 to 125	9JU

Orderable part number	Status (1)	Material type (2)	Package | Pins	Package qty | Carrier	RoHS (3)	Lead finish/ Ball material (4)	MSL rating/ Peak reflow (5)	Op temp (°C)	Part marking (6)
TL4051CIDBZR	Active	Production	SOT-23 (DBZ) | 3	3000 | LARGE T&R	Yes	NIPDAU | SN	Level-1-260C-UNLIM	-40 to 85	TN4U
TL4051CIDBZR.A	Active	Production	SOT-23 (DBZ) | 3	3000 | LARGE T&R	Yes	SN	Level-1-260C-UNLIM	-40 to 85	TN4U
TL4051CIDBZT	Active	Production	SOT-23 (DBZ) | 3	250 | SMALL T&R	Yes	NIPDAU | SN	Level-1-260C-UNLIM	-40 to 85	TN4U
TL4051CIDBZT.A	Active	Production	SOT-23 (DBZ) | 3	250 | SMALL T&R	Yes	SN	Level-1-260C-UNLIM	-40 to 85	TN4U
TL4051CIDCKR	Active	Production	SC70 (DCK) | 5	3000 | LARGE T&R	Yes	NIPDAU | POST-PLAT AG SPOT	Level-1-260C-UNLIM	-40 to 85	99U
TL4051CIDCKR.A	Active	Production	SC70 (DCK) | 5	3000 | LARGE T&R	Yes	POST-PLAT AG SPOT	Level-1-260C-UNLIM	-40 to 85	99U
TL4051CQDBZR	Active	Production	SOT-23 (DBZ) | 3	3000 | LARGE T&R	Yes	Call TI | Nipdau	Level-1-260C-UNLIM	-40 to 125	TN7U
TL4051CQDBZR.A	Active	Production	SOT-23 (DBZ) | 3	3000 | LARGE T&R	Yes	Call TI	Level-1-260C-UNLIM	-40 to 125	TN7U
TL4051CQDCKR	Active	Production	SC70 (DCK) | 5	3000 | LARGE T&R	Yes	NIPDAU | POST-PLAT AG SPOT	Level-1-260C-UNLIM	-40 to 125	9CU
TL4051CQDCKR.A	Active	Production	SC70 (DCK) | 5	3000 | LARGE T&R	Yes	POST-PLAT AG SPOT	Level-1-260C-UNLIM	-40 to 125	9CU

(1) **Status:** For more details on status, see our product life cycle.

(2) **Material type:** When designated, preproduction parts are prototypes/experimental devices, and are not yet approved or released for full production. Testing and final process, including without limitation quality assurance, reliability performance testing, and/or process qualification, may not yet be complete, and this item is subject to further changes or possible discontinuation. If available for ordering, purchases will be subject to an additional waiver at checkout, and are intended for early internal evaluation purposes only. These items are sold without warranties of any kind.

(3) **RoHS values:** Yes, No, RoHS Exempt. See the TI RoHS Statement for additional information and value definition.

(4) **Lead finish/Ball material:** Parts may have multiple material finish options. Finish options are separated by a vertical ruled line. Lead finish/Ball material values may wrap to two lines if the finish value exceeds the maximum column width.

(5) **MSL rating/Peak reflow:** The moisture sensitivity level ratings and peak solder (reflow) temperatures. In the event that a part has multiple moisture sensitivity ratings, only the lowest level per JEDEC standards is shown. Refer to the shipping label for the actual reflow temperature that will be used to mount the part to the printed circuit board.

(6) **Part marking:** There may be an additional marking, which relates to the logo, the lot trace code information, or the environmental category of the part.

Multiple part markings will be inside parentheses. Only one part marking contained in parentheses and separated by a "~" will appear on a part. If a line is indented then it is a continuation of the previous line and the two combined represent the entire part marking for that device.

Important Information and Disclaimer: The information provided on this page represents TI's knowledge and belief as of the date that it is provided. TI bases its knowledge and belief on information provided by third parties, and makes no representation or warranty as to the accuracy of such information. Efforts are underway to better integrate information from third parties. TI has taken and continues to take reasonable steps to provide representative

and accurate information but may not have conducted destructive testing or chemical analysis on incoming materials and chemicals. TI and TI suppliers consider certain information to be proprietary, and thus CAS numbers and other limited information may not be available for release.

In no event shall TI's liability arising out of such information exceed the total purchase price of the TI part(s) at issue in this document sold by TI to Customer on an annual basis.

TAPE AND REEL INFORMATION

REEL DIMENSIONS

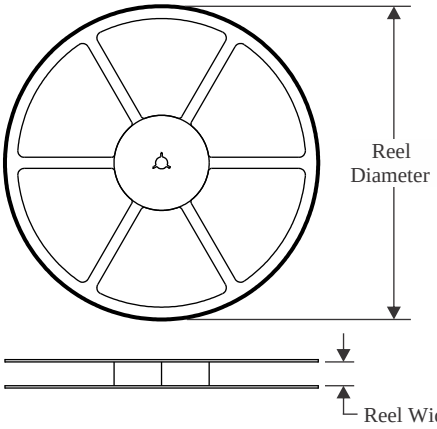

TAPE DIMENSIONS

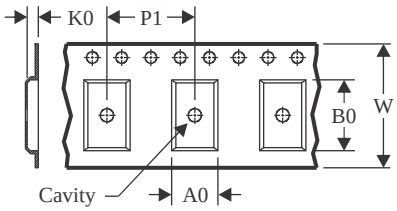

A0	Dimension designed to accommodate the component width
B0	Dimension designed to accommodate the component length
K0	Dimension designed to accommodate the component thickness
W	Overall width of the carrier tape
P1	Pitch between successive cavity centers

QUADRANT ASSIGNMENTS FOR PIN 1 ORIENTATION IN TAPE

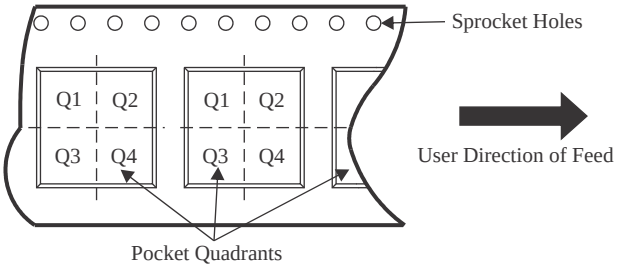

*All dimensions are nominal

Device	Package Type	Package Drawing	Pins	SPQ	Reel Diameter (mm)	Reel Width W1 (mm)	A0 (mm)	B0 (mm)	K0 (mm)	P1 (mm)	W (mm)	Pin1 Quadrant
TL4051A12IDBZR	SOT-23	DBZ	3	3000	180.0	8.4	3.2	2.85	1.3	4.0	8.0	Q3
TL4051A12IDBZT	SOT-23	DBZ	3	250	180.0	8.4	3.2	2.85	1.3	4.0	8.0	Q3
TL4051A12QDBZR	SOT-23	DBZ	3	3000	180.0	8.4	3.2	2.85	1.3	4.0	8.0	Q3
TL4051A12QDBZT	SOT-23	DBZ	3	250	180.0	8.4	3.2	2.85	1.3	4.0	8.0	Q3
TL4051A12QDCKR	SC70	DCK	5	3000	179.0	8.4	2.2	2.5	1.2	4.0	8.0	Q3
TL4051A12QDCKR	SC70	DCK	5	3000	180.0	8.4	2.3	2.55	1.2	4.0	8.0	Q3
TL4051A12QDCKRG4	SC70	DCK	5	3000	179.0	8.4	2.2	2.5	1.2	4.0	8.0	Q3
TL4051AIDBZR	SOT-23	DBZ	3	3000	179.0	8.4	3.15	2.95	1.22	4.0	8.0	Q3
TL4051AIDBZT	SOT-23	DBZ	3	250	179.0	8.4	3.15	2.95	1.22	4.0	8.0	Q3
TL4051AIDCKR	SC70	DCK	5	3000	180.0	8.4	2.3	2.55	1.2	4.0	8.0	Q3
TL4051AIDCKR	SC70	DCK	5	3000	179.0	8.4	2.2	2.5	1.2	4.0	8.0	Q3
TL4051AQDBZR	SOT-23	DBZ	3	3000	180.0	8.4	3.2	2.85	1.3	4.0	8.0	Q3
TL4051AQDBZR	SOT-23	DBZ	3	3000	179.0	8.4	3.15	2.95	1.22	4.0	8.0	Q3
TL4051AQDCKR	SC70	DCK	5	3000	180.0	8.4	2.3	2.55	1.2	4.0	8.0	Q3
TL4051AQDCKR	SC70	DCK	5	3000	179.0	8.4	2.2	2.5	1.2	4.0	8.0	Q3
TL4051B12IDBZR	SOT-23	DBZ	3	3000	180.0	8.4	3.2	2.85	1.3	4.0	8.0	Q3

Device	Package Type	Package Drawing	Pins	SPQ	Reel Diameter (mm)	Reel Width W1 (mm)	A0 (mm)	B0 (mm)	K0 (mm)	P1 (mm)	W (mm)	Pin1 Quadrant
TL4051B12IDBZR	SOT-23	DBZ	3	3000	179.0	8.4	3.15	2.95	1.22	4.0	8.0	Q3
TL4051B12IDBZR	SOT-23	DBZ	3	3000	178.0	9.2	3.15	2.77	1.22	4.0	8.0	Q3
TL4051B12IDBZT	SOT-23	DBZ	3	250	180.0	8.4	3.2	2.85	1.3	4.0	8.0	Q3
TL4051B12QDBZR	SOT-23	DBZ	3	3000	180.0	8.4	3.2	2.85	1.3	4.0	8.0	Q3
TL4051B12QDCKR	SC70	DCK	5	3000	179.0	8.4	2.2	2.5	1.2	4.0	8.0	Q3
TL4051B12QDCKR	SC70	DCK	5	3000	180.0	8.4	2.3	2.55	1.2	4.0	8.0	Q3
TL4051BIDBZR	SOT-23	DBZ	3	3000	180.0	8.4	3.2	2.85	1.3	4.0	8.0	Q3
TL4051BIDBZR	SOT-23	DBZ	3	3000	179.0	8.4	3.15	2.95	1.22	4.0	8.0	Q3
TL4051BIDBZT	SOT-23	DBZ	3	250	179.0	8.4	3.15	2.95	1.22	4.0	8.0	Q3
TL4051BIDBZT	SOT-23	DBZ	3	250	180.0	8.4	3.2	2.85	1.3	4.0	8.0	Q3
TL4051BIDCKR	SC70	DCK	5	3000	180.0	8.4	2.3	2.55	1.2	4.0	8.0	Q3
TL4051BIDCKR	SC70	DCK	5	3000	179.0	8.4	2.2	2.5	1.2	4.0	8.0	Q3
TL4051BQDBZR	SOT-23	DBZ	3	3000	179.0	8.4	3.15	2.95	1.22	4.0	8.0	Q3
TL4051BQDBZR	SOT-23	DBZ	3	3000	180.0	8.4	3.2	2.85	1.3	4.0	8.0	Q3
TL4051BQDCKR	SC70	DCK	5	3000	180.0	8.4	2.3	2.55	1.2	4.0	8.0	Q3
TL4051BQDCKR	SC70	DCK	5	3000	179.0	8.4	2.2	2.5	1.2	4.0	8.0	Q3
TL4051BQDCKRG4	SC70	DCK	5	3000	179.0	8.4	2.2	2.5	1.2	4.0	8.0	Q3
TL4051C12IDBZR	SOT-23	DBZ	3	3000	180.0	8.4	3.2	2.85	1.3	4.0	8.0	Q3
TL4051C12IDBZR	SOT-23	DBZ	3	3000	179.0	8.4	3.15	2.95	1.22	4.0	8.0	Q3
TL4051C12IDBZT	SOT-23	DBZ	3	250	180.0	8.4	3.2	2.85	1.3	4.0	8.0	Q3
TL4051C12IDCKR	SC70	DCK	5	3000	179.0	8.4	2.2	2.5	1.2	4.0	8.0	Q3
TL4051C12IDCKR	SC70	DCK	5	3000	180.0	8.4	2.3	2.55	1.2	4.0	8.0	Q3
TL4051C12QDBZR	SOT-23	DBZ	3	3000	180.0	8.4	3.2	2.85	1.3	4.0	8.0	Q3
TL4051C12QDBZT	SOT-23	DBZ	3	250	180.0	8.4	3.2	2.85	1.3	4.0	8.0	Q3
TL4051C12QDCKR	SC70	DCK	5	3000	180.0	8.4	2.3	2.55	1.2	4.0	8.0	Q3
TL4051C12QDCKR	SC70	DCK	5	3000	179.0	8.4	2.2	2.5	1.2	4.0	8.0	Q3
TL4051CIDBZR	SOT-23	DBZ	3	3000	180.0	8.4	3.2	2.85	1.3	4.0	8.0	Q3
TL4051CIDBZR	SOT-23	DBZ	3	3000	179.0	8.4	3.15	2.95	1.22	4.0	8.0	Q3
TL4051CIDBZT	SOT-23	DBZ	3	250	180.0	8.4	3.2	2.85	1.3	4.0	8.0	Q3
TL4051CIDBZT	SOT-23	DBZ	3	250	179.0	8.4	3.15	2.95	1.22	4.0	8.0	Q3
TL4051CIDCKR	SC70	DCK	5	3000	179.0	8.4	2.2	2.5	1.2	4.0	8.0	Q3
TL4051CIDCKR	SC70	DCK	5	3000	180.0	8.4	2.3	2.55	1.2	4.0	8.0	Q3
TL4051CQDBZR	SOT-23	DBZ	3	3000	180.0	8.4	3.2	2.85	1.3	4.0	8.0	Q3
TL4051CQDBZR	SOT-23	DBZ	3	3000	179.0	8.4	3.15	2.95	1.22	4.0	8.0	Q3
TL4051CQDCKR	SC70	DCK	5	3000	179.0	8.4	2.2	2.5	1.2	4.0	8.0	Q3
TL4051CQDCKR	SC70	DCK	5	3000	180.0	8.4	2.3	2.55	1.2	4.0	8.0	Q3

TAPE AND REEL BOX DIMENSIONS

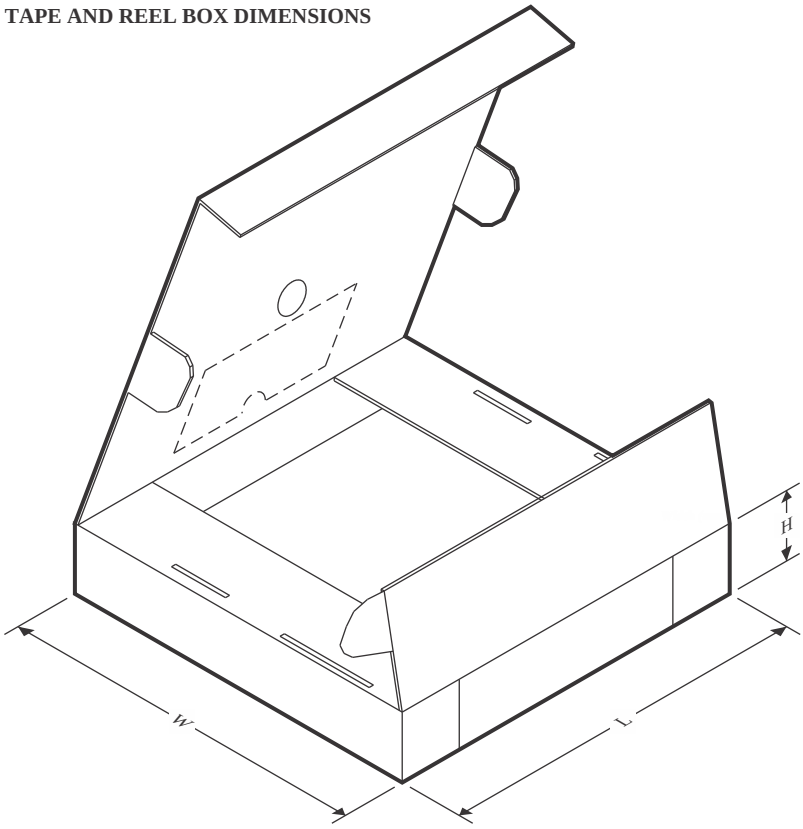

*All dimensions are nominal

Device	Package Type	Package Drawing	Pins	SPQ	Length (mm)	Width (mm)	Height (mm)
TL4051A12IDBZR	SOT-23	DBZ	3	3000	210.0	185.0	35.0
TL4051A12IDBZT	SOT-23	DBZ	3	250	210.0	185.0	35.0
TL4051A12QDBZR	SOT-23	DBZ	3	3000	210.0	185.0	35.0
TL4051A12QDBZT	SOT-23	DBZ	3	250	210.0	185.0	35.0
TL4051A12QDCKR	SC70	DCK	5	3000	200.0	183.0	25.0
TL4051A12QDCKR	SC70	DCK	5	3000	210.0	185.0	35.0
TL4051A12QDCKRG4	SC70	DCK	5	3000	200.0	183.0	25.0
TL4051AIDBZR	SOT-23	DBZ	3	3000	200.0	183.0	25.0
TL4051AIDBZT	SOT-23	DBZ	3	250	203.0	203.0	35.0
TL4051AIDCKR	SC70	DCK	5	3000	210.0	185.0	35.0
TL4051AIDCKR	SC70	DCK	5	3000	203.0	203.0	35.0
TL4051AQDBZR	SOT-23	DBZ	3	3000	210.0	185.0	35.0
TL4051AQDBZR	SOT-23	DBZ	3	3000	200.0	183.0	25.0
TL4051AQDCKR	SC70	DCK	5	3000	210.0	185.0	35.0
TL4051AQDCKR	SC70	DCK	5	3000	200.0	183.0	25.0
TL4051B12IDBZR	SOT-23	DBZ	3	3000	210.0	185.0	35.0
TL4051B12IDBZR	SOT-23	DBZ	3	3000	200.0	183.0	25.0
TL4051B12IDBZR	SOT-23	DBZ	3	3000	180.0	180.0	18.0

Device	Package Type	Package Drawing	Pins	SPQ	Length (mm)	Width (mm)	Height (mm)
TL4051B12IDBZT	SOT-23	DBZ	3	250	210.0	185.0	35.0
TL4051B12QDBZR	SOT-23	DBZ	3	3000	210.0	185.0	35.0
TL4051B12QDCKR	SC70	DCK	5	3000	203.0	203.0	35.0
TL4051B12QDCKR	SC70	DCK	5	3000	210.0	185.0	35.0
TL4051BIDBZR	SOT-23	DBZ	3	3000	210.0	185.0	35.0
TL4051BIDBZR	SOT-23	DBZ	3	3000	200.0	183.0	25.0
TL4051BIDBZT	SOT-23	DBZ	3	250	203.0	203.0	35.0
TL4051BIDBZT	SOT-23	DBZ	3	250	210.0	185.0	35.0
TL4051BIDCKR	SC70	DCK	5	3000	210.0	185.0	35.0
TL4051BIDCKR	SC70	DCK	5	3000	203.0	203.0	35.0
TL4051BQDBZR	SOT-23	DBZ	3	3000	203.0	203.0	35.0
TL4051BQDBZR	SOT-23	DBZ	3	3000	210.0	185.0	35.0
TL4051BQDCKR	SC70	DCK	5	3000	210.0	185.0	35.0
TL4051BQDCKR	SC70	DCK	5	3000	200.0	183.0	25.0
TL4051BQDCKRG4	SC70	DCK	5	3000	200.0	183.0	25.0
TL4051C12IDBZR	SOT-23	DBZ	3	3000	210.0	185.0	35.0
TL4051C12IDBZR	SOT-23	DBZ	3	3000	200.0	183.0	25.0
TL4051C12IDBZT	SOT-23	DBZ	3	250	210.0	185.0	35.0
TL4051C12IDCKR	SC70	DCK	5	3000	200.0	183.0	25.0
TL4051C12IDCKR	SC70	DCK	5	3000	210.0	185.0	35.0
TL4051C12QDBZR	SOT-23	DBZ	3	3000	210.0	185.0	35.0
TL4051C12QDBZT	SOT-23	DBZ	3	250	210.0	185.0	35.0
TL4051C12QDCKR	SC70	DCK	5	3000	210.0	185.0	35.0
TL4051C12QDCKR	SC70	DCK	5	3000	200.0	183.0	25.0
TL4051CIDBZR	SOT-23	DBZ	3	3000	210.0	185.0	35.0
TL4051CIDBZR	SOT-23	DBZ	3	3000	200.0	183.0	25.0
TL4051CIDBZT	SOT-23	DBZ	3	250	210.0	185.0	35.0
TL4051CIDBZT	SOT-23	DBZ	3	250	200.0	183.0	25.0
TL4051CIDCKR	SC70	DCK	5	3000	200.0	183.0	25.0
TL4051CIDCKR	SC70	DCK	5	3000	210.0	185.0	35.0
TL4051CQDBZR	SOT-23	DBZ	3	3000	210.0	185.0	35.0
TL4051CQDBZR	SOT-23	DBZ	3	3000	200.0	183.0	25.0
TL4051CQDCKR	SC70	DCK	5	3000	203.0	203.0	35.0
TL4051CQDCKR	SC70	DCK	5	3000	210.0	185.0	35.0

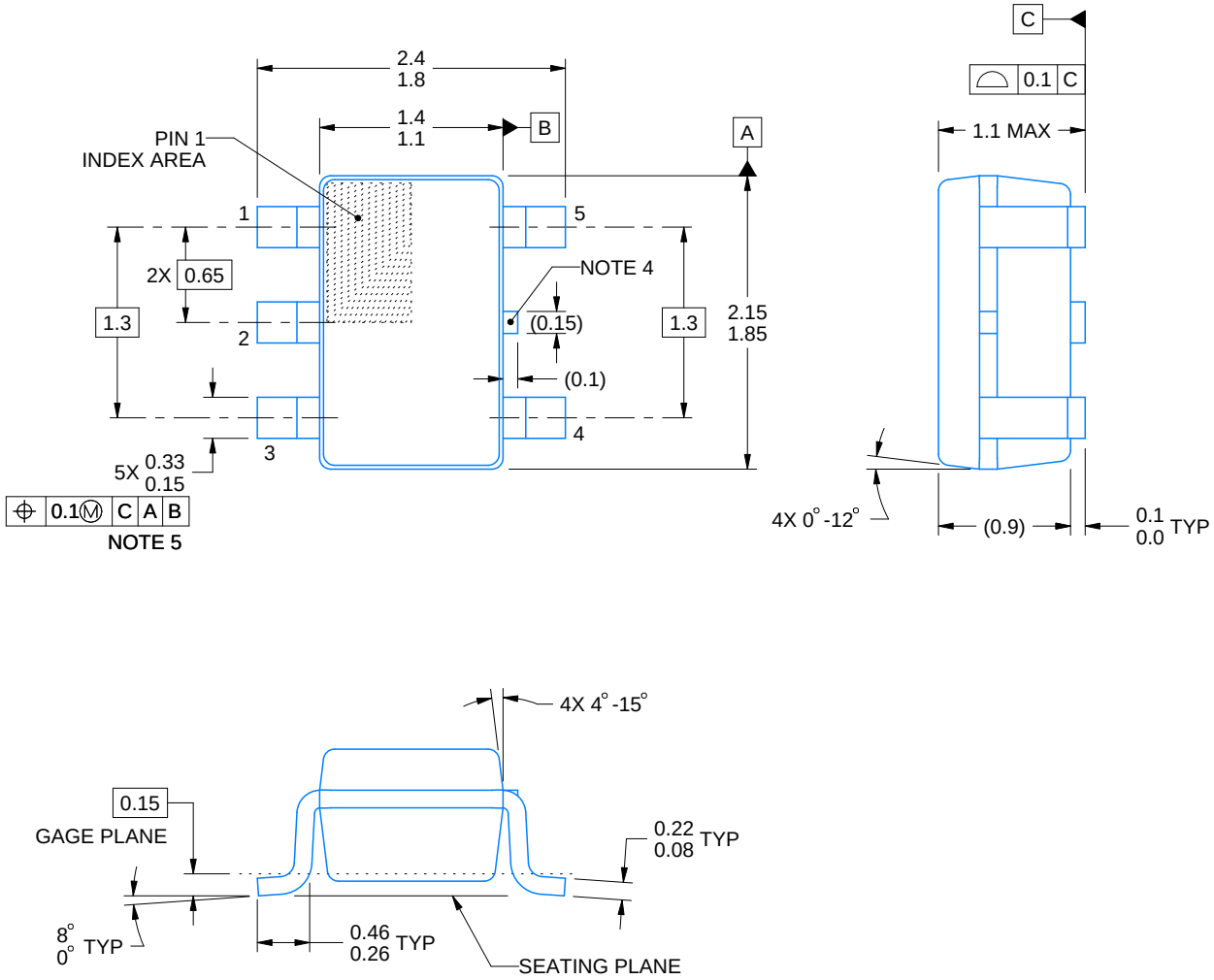

NOTES:

1. All linear dimensions are in millimeters. Any dimensions in parenthesis are for reference only. Dimensioning and tolerancing per ASME Y14.5M.
2. This drawing is subject to change without notice.
3. Refernce JEDEC MO-203.
4. Support pin may differ or may not be present.
5. Lead width does not comply with JEDEC.
6. Body dimensions do not include mold flash, protrusions, or gate burrs. Mold flash, protrusions, or gate burrs shall not exceed 0.25mm per side

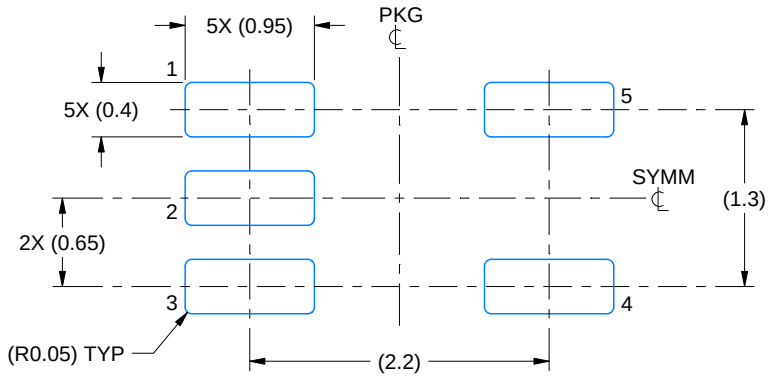

LAND PATTERN EXAMPLE
EXPOSED METAL SHOWN
SCALE:18X

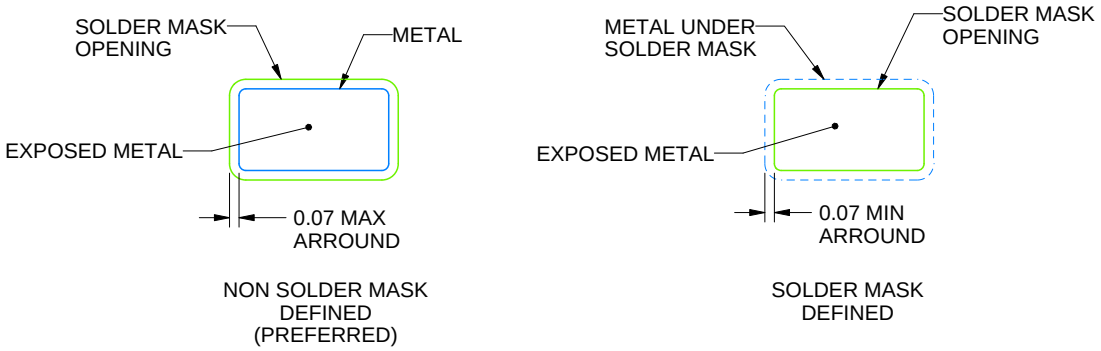

SOLDER MASK DETAILS

4214834/G 11/2024

NOTES: (continued)

7. Publication IPC-7351 may have alternate designs.
8. Solder mask tolerances between and around signal pads can vary based on board fabrication site.

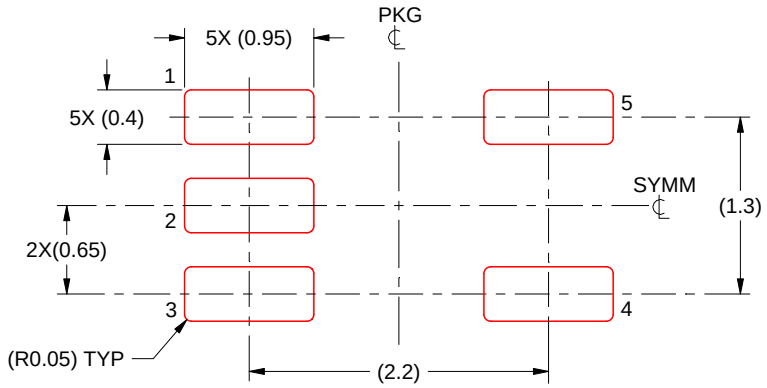

SOLDER PASTE EXAMPLE
BASED ON 0.125 THICK STENCIL
SCALE:18X

4214834/G 11/2024

NOTES: (continued)

9. Laser cutting apertures with trapezoidal walls and rounded corners may offer better paste release. IPC-7525 may have alternate design recommendations.
10. Board assembly site may have different recommendations for stencil design.

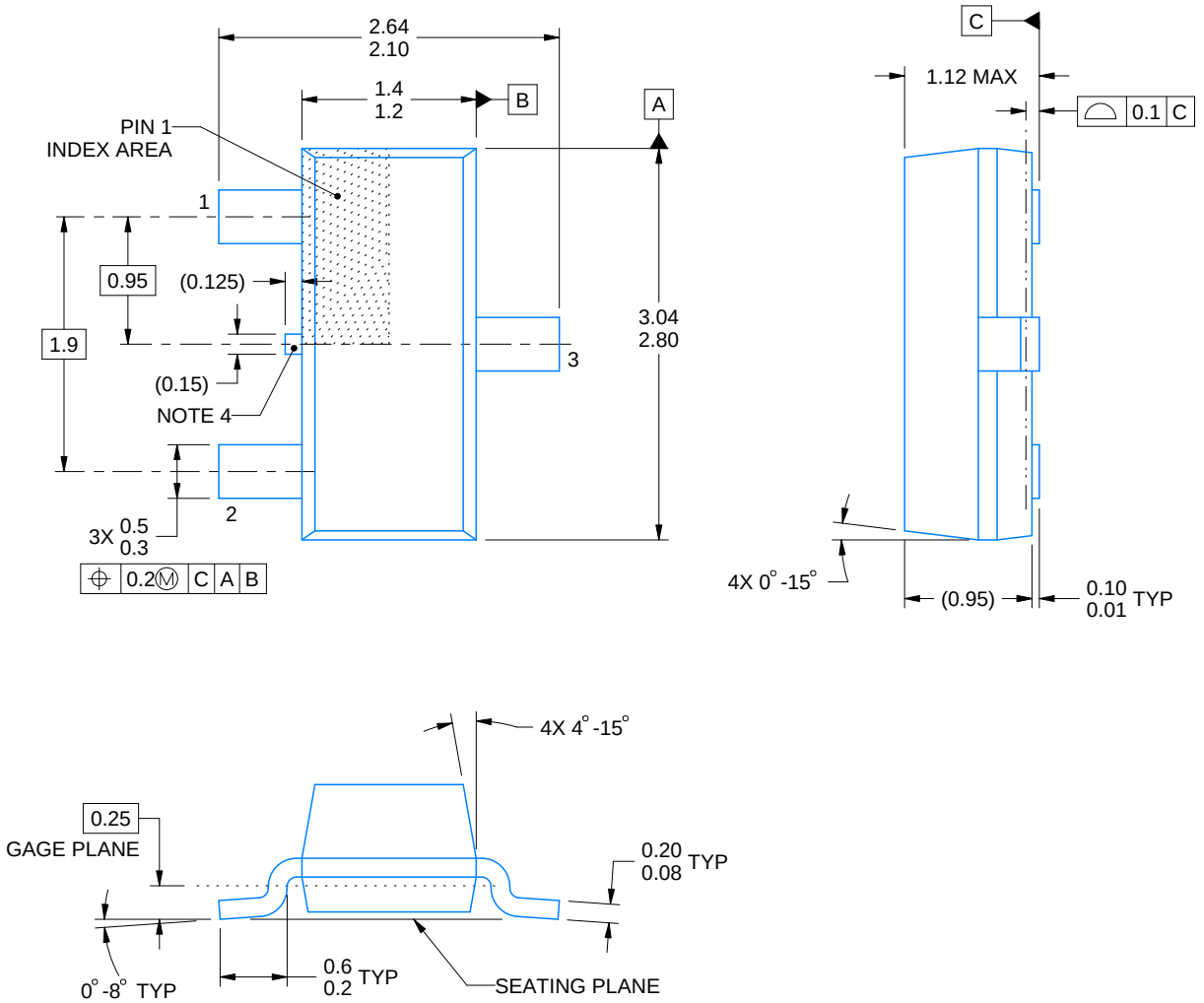

4214838/F 08/2024

NOTES:

1. All linear dimensions are in millimeters. Any dimensions in parenthesis are for reference only. Dimensioning and tolerancing per ASME Y14.5M.
2. This drawing is subject to change without notice.
3. Reference JEDEC registration TO-236, except minimum foot length.
4. Support pin may differ or may not be present.
5. Body dimensions do not include mold flash, protrusions, or gate burrs. Mold flash, protrusions, or gate burrs shall not exceed 0.25mm per side

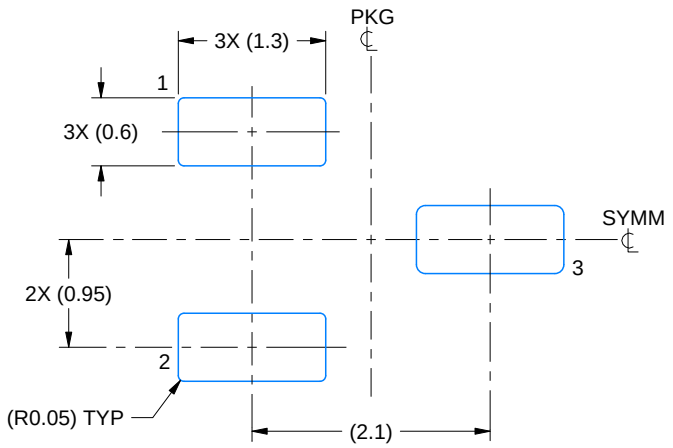

LAND PATTERN EXAMPLE
SCALE:15X

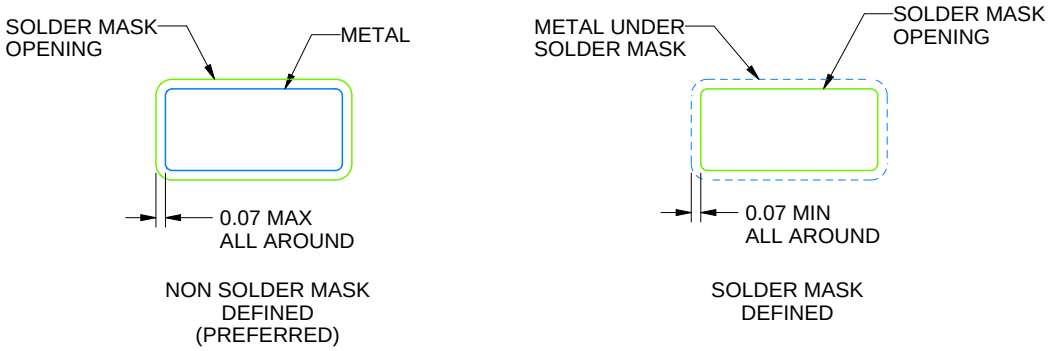

SOLDER MASK DETAILS

4214838/F 08/2024

NOTES: (continued)

5. Publication IPC-7351 may have alternate designs.
6. Solder mask tolerances between and around signal pads can vary based on board fabrication site.

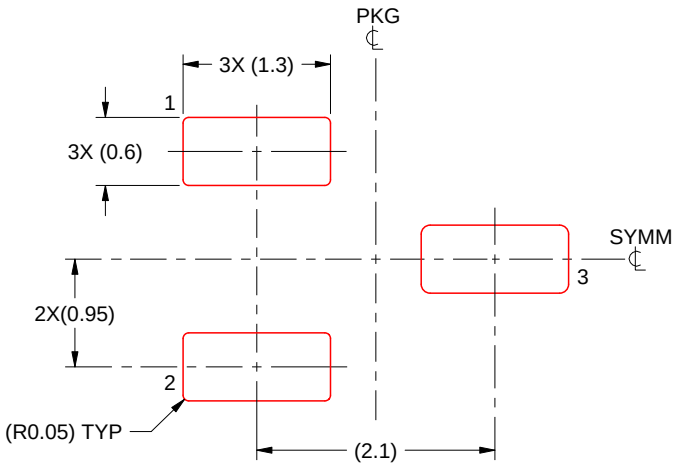

SOLDER PASTE EXAMPLE
BASED ON 0.125 THICK STENCIL
SCALE:15X

4214838/F 08/2024

NOTES: (continued)

7. Laser cutting apertures with trapezoidal walls and rounded corners may offer better paste release. IPC-7525 may have alternate design recommendations.
8. Board assembly site may have different recommendations for stencil design.

IMPORTANT NOTICE AND DISCLAIMER

TI PROVIDES TECHNICAL AND RELIABILITY DATA (INCLUDING DATASHEETS), DESIGN RESOURCES (INCLUDING REFERENCE DESIGNS), APPLICATION OR OTHER DESIGN ADVICE, WEB TOOLS, SAFETY INFORMATION, AND OTHER RESOURCES “AS IS” AND WITH ALL FAULTS, AND DISCLAIMS ALL WARRANTIES, EXPRESS AND IMPLIED, INCLUDING WITHOUT LIMITATION ANY IMPLIED WARRANTIES OF MERCHANTABILITY, FITNESS FOR A PARTICULAR PURPOSE OR NON-INFRINGEMENT OF THIRD PARTY INTELLECTUAL PROPERTY RIGHTS.

These resources are intended for skilled developers designing with TI products. You are solely responsible for (1) selecting the appropriate TI products for your application, (2) designing, validating and testing your application, and (3) ensuring your application meets applicable standards, and any other safety, security, regulatory or other requirements.

These resources are subject to change without notice. TI grants you permission to use these resources only for development of an application that uses the TI products described in the resource. Other reproduction and display of these resources is prohibited. No license is granted to any other TI intellectual property right or to any third party intellectual property right. TI disclaims responsibility for, and you fully indemnify TI and its representatives against any claims, damages, costs, losses, and liabilities arising out of your use of these resources.

TI’s products are provided subject to TI’s Terms of Sale, TI’s General Quality Guidelines, or other applicable terms available either on ti.com or provided in conjunction with such TI products. TI’s provision of these resources does not expand or otherwise alter TI’s applicable warranties or warranty disclaimers for TI products. Unless TI explicitly designates a product as custom or customer-specified, TI products are standard, catalog, general purpose devices.

TI objects to and rejects any additional or different terms you may propose.

Copyright © 2026, Texas Instruments Incorporated

Last updated 10/2025