- **Members of the Texas Instruments *Widebus*™ Family**
- **A-Port Outputs Have Equivalent 25-Ω Series Resistors, So No External Resistors Are Required**
- **State-of-the-Art *EPIC*-II*B*™ BiCMOS Design Significantly Reduces Power Dissipation**
- **Typical V_{OLP} (Output Ground Bounce) < 1 V at V_{CC} = 5 V, T_A = 25°C**
- **Distributed V_{CC} and GND Pin Configuration Minimizes High-Speed Switching Noise**
- **Flow-Through Architecture Optimizes PCB Layout**
- **Bus Hold on Data Inputs Eliminates the Need for External Pullup/Pulldown Resistors**
- **Latch-Up Performance Exceeds 500 mA Per JESD 17**
- **ESD Protection Exceeds 2000 V Per MIL-STD-833, Method 3015; Exceeds 200 V Using Machine Model (C = 200 pF, R = 0)**
- **Package Options Include Plastic Thin Shrink Small-Outline (DGG), Thin Very Small-Outline (DGV), and Shrink Small-Outline (DL) Packages and 380-mil Fine-Pitch Ceramic Flat (WD) Package Using 25-mil Center-to-Center Spacings**

SN54ABTH162245 . . . WD PACKAGE
SN74ABTH162245 . . . DGG, DGV, OR DL PACKAGE
(TOP VIEW)

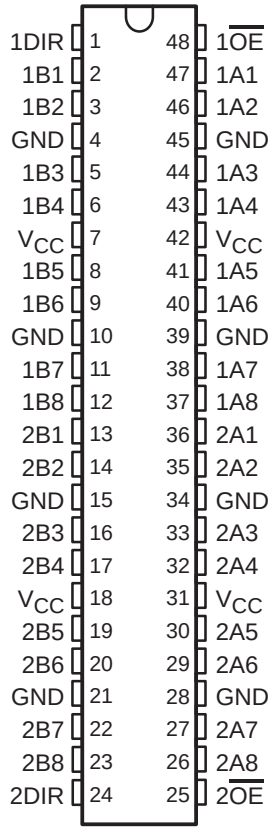

description

The ’ABTH162245 devices are 16-bit noninverting 3-state transceivers designed for synchronous two-way communication between data buses. The control-function implementation minimizes external timing requirements.

These devices can be used as two 8-bit transceivers or one 16-bit transceiver. They allow data transmission from the A bus to the B bus or from the B bus to the A bus, depending on the logic level at the direction-control (DIR) input. The output-enable ($\overline{OE}$) input can be used to disable the device so that the buses are effectively isolated.

The A-port outputs, which are designed to source or sink up to 12 mA, include equivalent 25-Ω series resistors to reduce overshoot and undershoot.

Active bus-hold circuitry is provided to hold unused or floating data inputs at a valid logic level.

To ensure the high-impedance state during power up or power down, $\overline{OE}$ should be tied to V_{CC} through a pullup resistor; the minimum value of the resistor is determined by the current-sinking capability of the driver.

The SN54ABTH162245 is characterized for operation over the full military temperature range of –55°C to 125°C. The SN74ABTH162245 is characterized for operation from –40°C to 85°C.

Please be aware that an important notice concerning availability, standard warranty, and use in critical applications of Texas Instruments semiconductor products and disclaimers thereto appears at the end of this data sheet.

Widebus and EPIC-IIB are trademarks of Texas Instruments Incorporated.

UNLESS OTHERWISE NOTED this document contains PRODUCTION DATA information current as of publication date. Products conform to specifications per the terms of Texas Instruments standard warranty. Production processing does not necessarily include testing of all parameters.

Copyright © 1999, Texas Instruments Incorporated

FUNCTION TABLE
(each 8-bit section)

INPUTS		OPERATION
$\overline{OE}$	DIR	
L	L	B data to A bus
L	H	A data to B bus
H	X	Isolation

logic symbol†

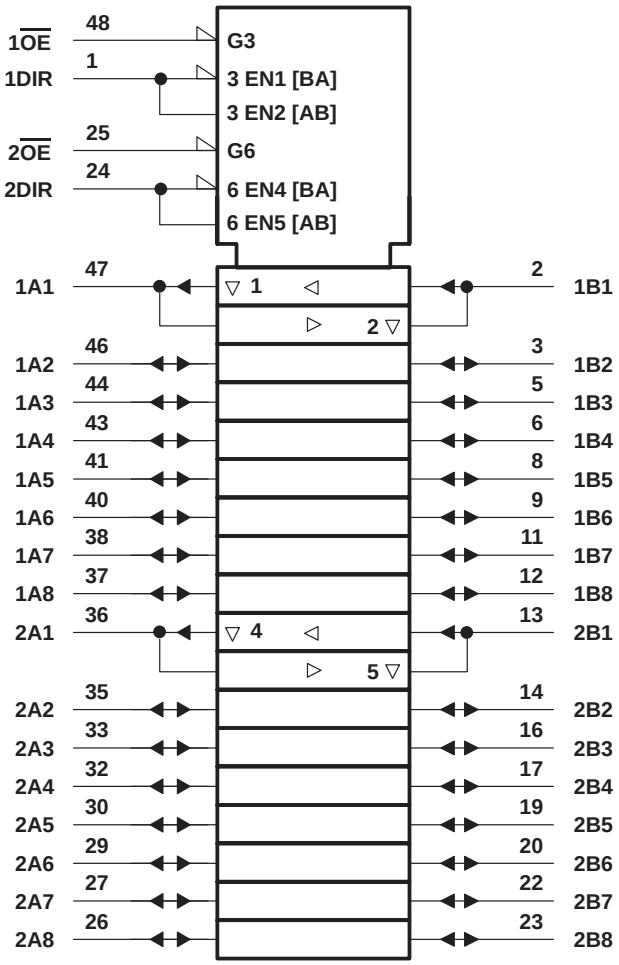

† This symbol is in accordance with ANSI/IEEE Std 91-1984 and IEC Publication 617-12.

logic diagram (positive logic)

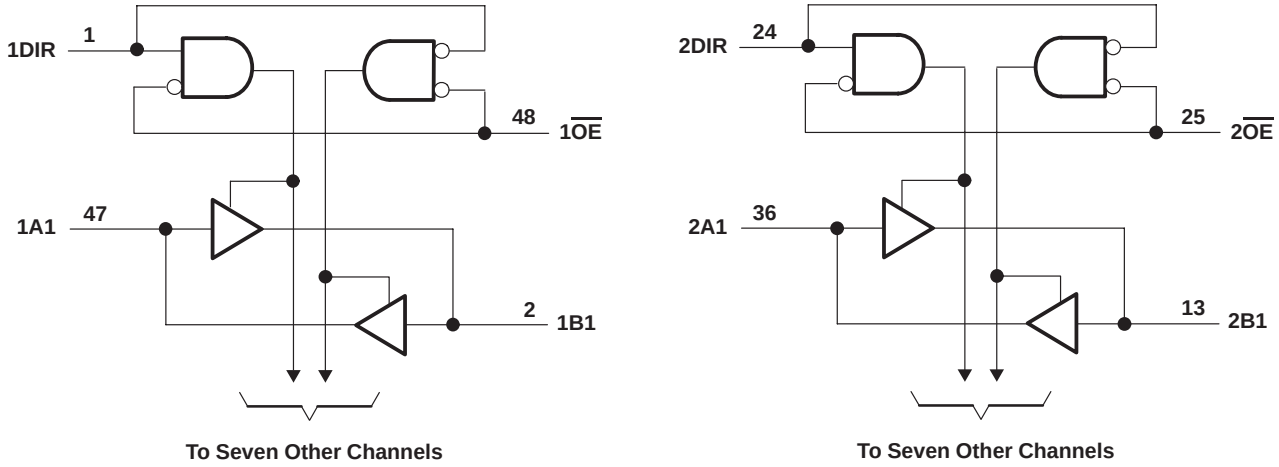

absolute maximum ratings over operating free-air temperature range (unless otherwise noted)†

Supply voltage range, V_{CC}	–0.5 V to 7 V
Input voltage range, V_I (except I/O ports) (see Note 1)	–0.5 V to 7 V
Voltage range applied to any output in the high or power-off state, V_O	–0.5 V to 5.5 V
Current into any output in the low state, I_O: SN54ABTH162245 (B port)	96 mA
SN74ABTH162245 (B port)	128 mA
SN54/74ABTH162245 (A port)	30 mA
Input clamp current, I_{IK} ($V_I < 0$)	–18 mA
Output clamp current, I_{OK} ($V_O < 0$)	–50 mA
Package thermal impedance, θ_{JA} (see Note 2): DGG package	89°C/W
DGV package	93°C/W
DL package	94°C/W
Storage temperature range, T_{stg}	–65°C to 150°C

† Stresses beyond those listed under “absolute maximum ratings” may cause permanent damage to the device. These are stress ratings only, and functional operation of the device at these or any other conditions beyond those indicated under “recommended operating conditions” is not implied. Exposure to absolute-maximum-rated conditions for extended periods may affect device reliability.

NOTES: 1. The input and output negative-voltage ratings may be exceeded if the input and output clamp-current ratings are observed.
2. The package thermal impedance is calculated in accordance with JESD 51.

recommended operating conditions (see Note 3)

			SN54ABTH162245		SN74ABTH162245		UNIT
			MIN	MAX	MIN	MAX	
V_{CC}	Supply voltage		4.5	5.5	4.5	5.5	V
V_{IH}	High-level input voltage		2		2		V
V_{IL}	Low-level input voltage			0.8		0.8	V
V_I	Input voltage		0	V_{CC}	0	V_{CC}	V
I_{OH}	High-level output current	B port		–24		–32	mA
		A port		–12		–12	
I_{OL}	Low-level output current	B port		48		64	mA
		A port		12		12	
$\Delta t/\Delta v$	Input transition rise or fall rate	Outputs enabled		10		10	ns/V
T_A	Operating free-air temperature		–55	125	–40	85	°C

NOTE 3: All unused control inputs of the device must be held at V_{CC} or GND to ensure proper device operation. Refer to the TI application report, *Implications of Slow or Floating CMOS Inputs*, literature number SCBA004.

PRODUCT PREVIEW

PRODUCT PREVIEW information concerns products in the formative or design phase of development. Characteristic data and other specifications are design goals. Texas Instruments reserves the right to change or discontinue these products without notice.

electrical characteristics over recommended operating free-air temperature range (unless otherwise noted)

PARAMETER		TEST CONDITIONS		SN54ABTH162245 MIN	SN54ABTH162245 TYP†	SN54ABTH162245 MAX	SN74ABTH162245 MIN	SN74ABTH162245 TYP†	SN74ABTH162245 MAX	UNIT
V_{IK}		V_{CC} = 4.5 V,	I_I = –18 mA			–1.2			–1.2	V
V_{OH}	A port	V_{CC} = 5 V,	I_{OH} = –1 mA	2.5			2.5			V
		V_{CC} = 4.5 V	I_{OH} = –1 mA	3			3			
			I_{OH} = –3 mA	3			3.1			
			I_{OH} = –12 mA				2.6			
	B port	V_{CC} = 5 V,	I_{OH} = –3 mA	3			3			
		V_{CC} = 4.5 V	I_{OH} = –3 mA	2.5			2.5			
			I_{OH} = –24 mA	2						
			I_{OH} = –32 mA				2			
V_{OL}	A port	V_{CC} = 4.5 V	I_{OL} = 12 mA			0.8			0.8	V
	B port		I_{OL} = 48 mA			0.45			0.45	
			I_{OL} = 64 mA						0.55	
V_{hys}					100			100		mV
I_I	Control inputs	V_{CC} = 5.5 V, V_I = V_{CC} or GND				±1			±1	µA
	A or B ports					±20			±20	
$I_{I(hold)}$		V_{CC} = 4.5 V	V_I = 0.8 V	100			100			µA
			V_I = 2 V	–100			–100			
I_{off}		V_{CC} = 0, V_I or V_O = 0 to 4.5 V							±100	µA
I_O‡	A port	V_{CC} = 5.5 V,	V_O = 2.5 V	–25		–90	–25		–100	mA
	B port			–50		–180	–50		–180	
I_{CEX}		V_{CC} = 5.5 V, V_O = 5.5 V	Outputs high			50			50	µA
I_{CC}	A or B ports	V_{CC} = 5.5 V, I_O = 0, V_I = V_{CC} or GND	Outputs high			2			2	mA
			Outputs low			32			32	
			Outputs disabled			2			2	
ΔI_{CC}§	Data inputs	V_{CC} = 5.5 V, One input at 3.4 V, Other inputs at V_{CC} or GND				2			2	mA
	Control inputs	V_{CC} = 5.5 V, One input at 3.4 V, Other inputs at V_{CC} or GND				1.5			1.5	
C_i		V_I = 2.5 V or 0.5 V			3			3		pF
C_{io}		V_O = 2.5 V or 0.5 V			6			6		pF

† All typical values are at V_{CC} = 5 V.
‡ Not more than one output should be tested at a time, and the duration of the test should not exceed one second.
§ This is the increase in supply current for each input that is at the specified TTL voltage level rather than V_{CC} or GND.

PRODUCT PREVIEW

PRODUCT PREVIEW information concerns products in the formative or design phase of development. Characteristic data and other specifications are design goals. Texas Instruments reserves the right to change or discontinue these products without notice.

switching characteristics over recommended ranges of supply voltage and operating free-air temperature, C_L = 50 pF (unless otherwise noted) (see Figure 1)

PARAMETER	FROM (INPUT)	TO (OUTPUT)	V_{CC} = 5 V, T_A = 25°C			SN54ABTH162245		SN74ABTH162245		UNIT
			MIN	TYP	MAX	MIN	MAX	MIN	MAX	
t_{PLH}	A	B	1	2.2	3.4	1	4.1	1	3.9	ns
t_{PHL}			1	2.3	3.7	1	4.4	1	4.2	
t_{PLH}	B	A	1	2.7	4.1	1	4.9	1	4.6	ns
t_{PHL}			1.5	3.1	4.6	1.5	5.2	1.5	5.1	
t_{PZH}	$\overline{OE}$	B	1	3.6	5.2	1	6.4	1	6.3	ns
t_{PZL}			1	3.7	5.4	1	6.5	1	6.4	
t_{PHZ}	$\overline{OE}$	B	2	4.4	5.8	2	6.4	2	6.3	ns
t_{PLZ}			1.5	3.3	4.7	1.5	5.6	1.5	5.2	
t_{PZH}	$\overline{OE}$	A	1.5	4.1	6	1.5	7.2	1.5	7.1	ns
t_{PZL}			1.5	4.3	6.1	1.5	7.3	1.5	7	
t_{PHZ}	$\overline{OE}$	A	2	4.5	6.1	2	6.8	2	6.6	ns
t_{PLZ}			1.5	3.7	5.1	1.5	6.1	1.5	5.7	

PRODUCT PREVIEW

PRODUCT PREVIEW information concerns products in the formative or design phase of development. Characteristic data and other specifications are design goals. Texas Instruments reserves the right to change or discontinue these products without notice.

PARAMETER MEASUREMENT INFORMATION

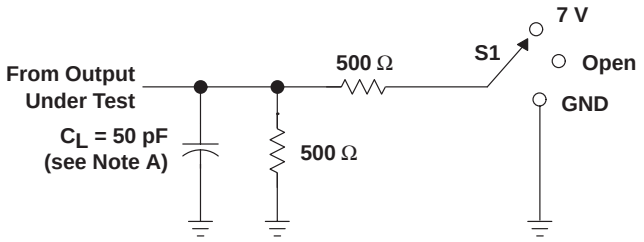

LOAD CIRCUIT

TEST	S1
t_{PLH}/t_{PHL}	Open
t_{PLZ}/t_{PZL}	7 V
t_{PHZ}/t_{PZH}	Open

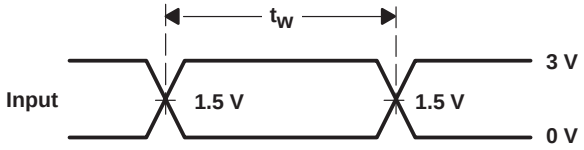

VOLTAGE WAVEFORMS
PULSE DURATION

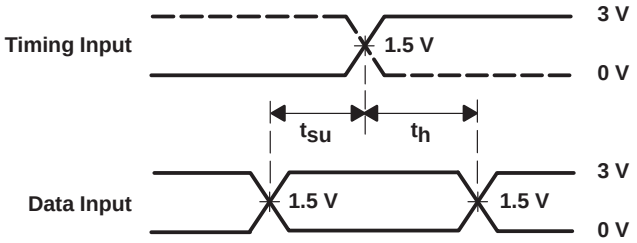

VOLTAGE WAVEFORMS
SETUP AND HOLD TIMES

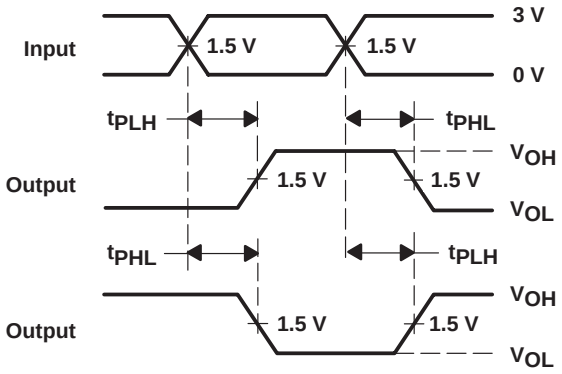

VOLTAGE WAVEFORMS
PROPAGATION DELAY TIMES
INVERTING AND NONINVERTING OUTPUTS

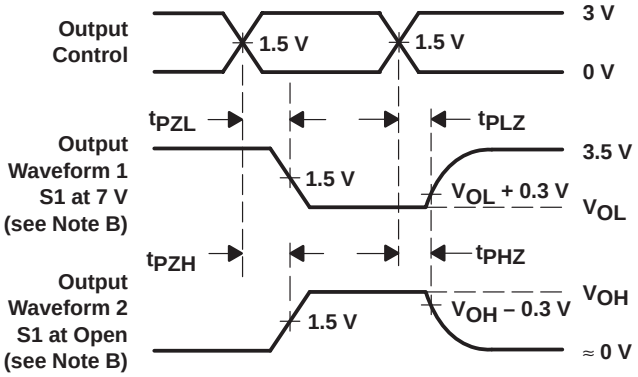

VOLTAGE WAVEFORMS
ENABLE AND DISABLE TIMES
LOW- AND HIGH-LEVEL ENABLING

NOTES: A. C_L includes probe and jig capacitance.
B. Waveform 1 is for an output with internal conditions such that the output is low except when disabled by the output control. Waveform 2 is for an output with internal conditions such that the output is high except when disabled by the output control.
C. All input pulses are supplied by generators having the following characteristics: PRR ≤ 10 MHz, Z_O = 50 Ω, t_r ≤ 2.5 ns, t_f ≤ 2.5 ns.
D. The outputs are measured one at a time with one transition per measurement.

Figure 1. Load Circuit and Voltage Waveforms

PACKAGING INFORMATION

Orderable part number	Status (1)	Material type (2)	Package | Pins	Package qty | Carrier	RoHS (3)	Lead finish/ Ball material (4)	MSL rating/ Peak reflow (5)	Op temp (°C)	Part marking (6)
74ABTH162245DGGRG4	Active	Production	TSSOP (DGG) | 48	2000 | LARGE T&R	Yes	NIPDAU	Level-1-260C-UNLIM	-40 to 85	ABTH162245
74ABTH162245DGGRG4.B	Active	Production	TSSOP (DGG) | 48	2000 | LARGE T&R	Yes	NIPDAU	Level-1-260C-UNLIM	-40 to 85	ABTH162245
SN74ABTH162245DGGR	Active	Production	TSSOP (DGG) | 48	2000 | LARGE T&R	Yes	NIPDAU	Level-1-260C-UNLIM	-40 to 85	ABTH162245
SN74ABTH162245DGGR.B	Active	Production	TSSOP (DGG) | 48	2000 | LARGE T&R	Yes	NIPDAU	Level-1-260C-UNLIM	-40 to 85	ABTH162245
SN74ABTH162245DL	Active	Production	SSOP (DL) | 48	25 | TUBE	Yes	NIPDAU	Level-1-260C-UNLIM	-40 to 85	ABTH162245
SN74ABTH162245DL.B	Active	Production	SSOP (DL) | 48	25 | TUBE	Yes	NIPDAU	Level-1-260C-UNLIM	-40 to 85	ABTH162245

(1) **Status:** For more details on status, see our product life cycle.

(2) **Material type:** When designated, preproduction parts are prototypes/experimental devices, and are not yet approved or released for full production. Testing and final process, including without limitation quality assurance, reliability performance testing, and/or process qualification, may not yet be complete, and this item is subject to further changes or possible discontinuation. If available for ordering, purchases will be subject to an additional waiver at checkout, and are intended for early internal evaluation purposes only. These items are sold without warranties of any kind.

(3) **RoHS values:** Yes, No, RoHS Exempt. See the TI RoHS Statement for additional information and value definition.

(4) **Lead finish/Ball material:** Parts may have multiple material finish options. Finish options are separated by a vertical ruled line. Lead finish/Ball material values may wrap to two lines if the finish value exceeds the maximum column width.

(5) **MSL rating/Peak reflow:** The moisture sensitivity level ratings and peak solder (reflow) temperatures. In the event that a part has multiple moisture sensitivity ratings, only the lowest level per JEDEC standards is shown. Refer to the shipping label for the actual reflow temperature that will be used to mount the part to the printed circuit board.

(6) **Part marking:** There may be an additional marking, which relates to the logo, the lot trace code information, or the environmental category of the part.

Multiple part markings will be inside parentheses. Only one part marking contained in parentheses and separated by a "~" will appear on a part. If a line is indented then it is a continuation of the previous line and the two combined represent the entire part marking for that device.

Important Information and Disclaimer: The information provided on this page represents TI's knowledge and belief as of the date that it is provided. TI bases its knowledge and belief on information provided by third parties, and makes no representation or warranty as to the accuracy of such information. Efforts are underway to better integrate information from third parties. TI has taken and continues to take reasonable steps to provide representative and accurate information but may not have conducted destructive testing or chemical analysis on incoming materials and chemicals. TI and TI suppliers consider certain information to be proprietary, and thus CAS numbers and other limited information may not be available for release.

In no event shall TI's liability arising out of such information exceed the total purchase price of the TI part(s) at issue in this document sold by TI to Customer on an annual basis.

TAPE AND REEL INFORMATION

REEL DIMENSIONS

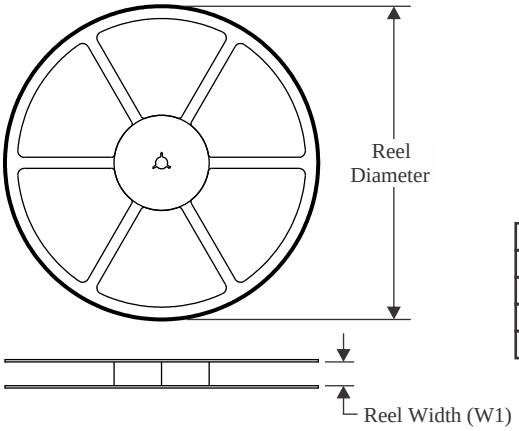

TAPE DIMENSIONS

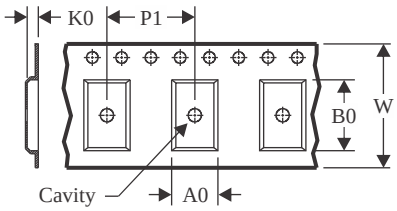

A0	Dimension designed to accommodate the component width
B0	Dimension designed to accommodate the component length
K0	Dimension designed to accommodate the component thickness
W	Overall width of the carrier tape
P1	Pitch between successive cavity centers

QUADRANT ASSIGNMENTS FOR PIN 1 ORIENTATION IN TAPE

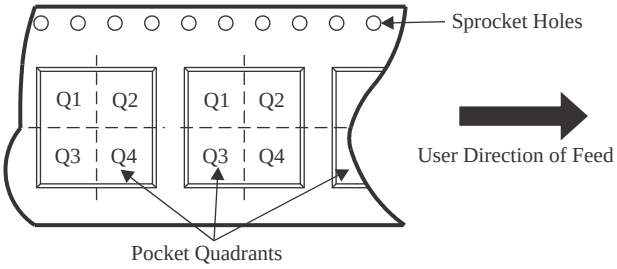

*All dimensions are nominal

Device	Package Type	Package Drawing	Pins	SPQ	Reel Diameter (mm)	Reel Width W1 (mm)	A0 (mm)	B0 (mm)	K0 (mm)	P1 (mm)	W (mm)	Pin1 Quadrant
74ABTH162245DGGRG4	TSSOP	DGG	48	2000	330.0	24.4	8.6	13.0	1.8	12.0	24.0	Q1
SN74ABTH162245DGGR	TSSOP	DGG	48	2000	330.0	24.4	8.6	13.0	1.8	12.0	24.0	Q1

TAPE AND REEL BOX DIMENSIONS

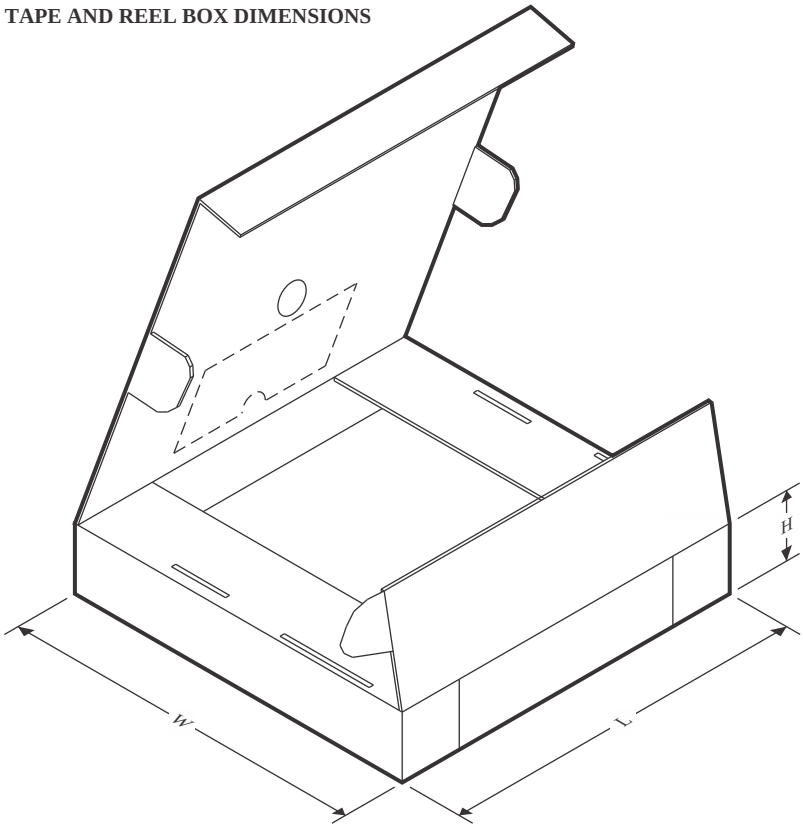

*All dimensions are nominal

Device	Package Type	Package Drawing	Pins	SPQ	Length (mm)	Width (mm)	Height (mm)
74ABTH162245DGGRG4	TSSOP	DGG	48	2000	356.0	356.0	45.0
SN74ABTH162245DGGR	TSSOP	DGG	48	2000	356.0	356.0	45.0

TUBE

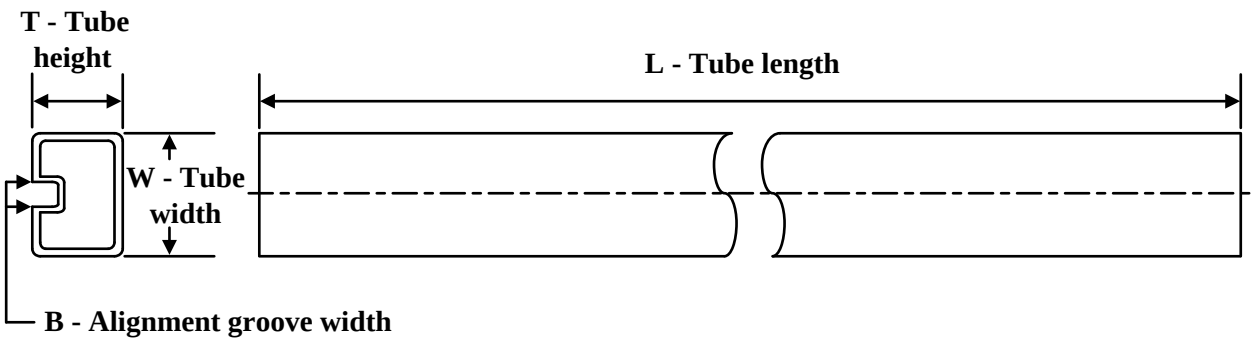

*All dimensions are nominal

Device	Package Name	Package Type	Pins	SPQ	L (mm)	W (mm)	T (µm)	B (mm)
SN74ABTH162245DL	DL	SSOP	48	25	473.7	14.24	5110	7.87
SN74ABTH162245DL.B	DL	SSOP	48	25	473.7	14.24	5110	7.87

IMPORTANT NOTICE AND DISCLAIMER

TI PROVIDES TECHNICAL AND RELIABILITY DATA (INCLUDING DATASHEETS), DESIGN RESOURCES (INCLUDING REFERENCE DESIGNS), APPLICATION OR OTHER DESIGN ADVICE, WEB TOOLS, SAFETY INFORMATION, AND OTHER RESOURCES “AS IS” AND WITH ALL FAULTS, AND DISCLAIMS ALL WARRANTIES, EXPRESS AND IMPLIED, INCLUDING WITHOUT LIMITATION ANY IMPLIED WARRANTIES OF MERCHANTABILITY, FITNESS FOR A PARTICULAR PURPOSE OR NON-INFRINGEMENT OF THIRD PARTY INTELLECTUAL PROPERTY RIGHTS.

These resources are intended for skilled developers designing with TI products. You are solely responsible for (1) selecting the appropriate TI products for your application, (2) designing, validating and testing your application, and (3) ensuring your application meets applicable standards, and any other safety, security, regulatory or other requirements.

These resources are subject to change without notice. TI grants you permission to use these resources only for development of an application that uses the TI products described in the resource. Other reproduction and display of these resources is prohibited. No license is granted to any other TI intellectual property right or to any third party intellectual property right. TI disclaims responsibility for, and you fully indemnify TI and its representatives against any claims, damages, costs, losses, and liabilities arising out of your use of these resources.

TI’s products are provided subject to TI’s Terms of Sale, TI’s General Quality Guidelines, or other applicable terms available either on ti.com or provided in conjunction with such TI products. TI’s provision of these resources does not expand or otherwise alter TI’s applicable warranties or warranty disclaimers for TI products. Unless TI explicitly designates a product as custom or customer-specified, TI products are standard, catalog, general purpose devices.

TI objects to and rejects any additional or different terms you may propose.

Copyright © 2026, Texas Instruments Incorporated

Last updated 10/2025