SNx4ACT11 Triple 3-Input AND Gates

1 Features

- 4.5V to 5.5V V_{CC} operation
- Inputs accept voltages to 5.5V
- Max t_{pd} of 10.5ns at 5V
- Inputs are TTL-voltage compatible

2 Description

The SNx4ACT11 device contains three independent 3-input AND gates. These devices perform the Boolean function Y = A • B • C in positive logic.

Device Information

PART NUMBER	PACKAGE(1)	PACKAGE SIZE(2)	BODY SIZE(3)
SNx4ACT11	BQA (WQFN, 14)	3mm x 2.5mm	3mm x 2.5mm
	DB (SSOP, 14)	6.2mm x 7.8mm	6.2mm x 5.3mm
	D (SOIC, 14)	8.65mm x 6mm	8.65 mm x 3.9mm
	N (PDIP, 14)	19.3mm x 9.4mm	19.3mm x 6.3 mm
	PW (TSSOP, 14)	5mm x 6.4mm	5mm x 4.4mm
	W (CFP , 14)	9.21mm x 9mm	9.21mm x 6.28mm
	FK, (LCCC , 14)	8.9mm x 8.9mm	8.9mm x 8.9mm

(1) For more information, see Section 10.
(2) The package size (length × width) is a nominal value and includes pins, where applicable.
(3) The body size (length × width) is a nominal value and does not include pins.

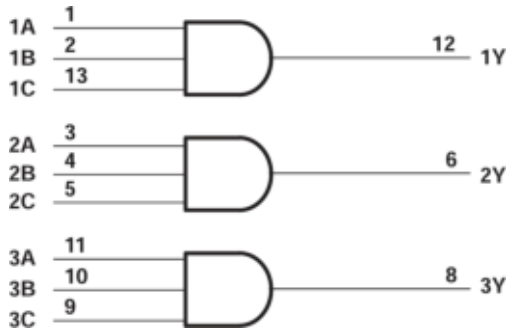

Logic Diagram, Each Gate (Positive Logic)

An IMPORTANT NOTICE at the end of this data sheet addresses availability, warranty, changes, use in safety-critical applications, intellectual property matters and other important disclaimers. PRODUCTION DATA.

Table of Contents

1 Features.....1
2 Description.....1
3 Pin Configuration and Functions.....3
4 Specifications.....5
4.1 Absolute Maximum Ratings.....5
4.2 Recommended Operating Conditions.....5
4.3 Thermal Information.....5
4.4 Electrical Characteristics.....6
4.5 Switching Characteristics.....6
4.6 Operating Characteristics.....6
5 Parameter Measurement Information.....7
6 Detailed Description.....8
6.1 Functional Block Diagram.....8
6.2 Device Functional Modes.....8
7 Application and Implementation.....9
7.1 Application Information.....9
7.2 Typical Application.....9
7.3 Power Supply Recommendations.....10
7.4 Layout.....11
8 Device and Documentation Support.....12
8.1 Documentation Support (Analog).....12
8.2 Receiving Notification of Documentation Updates.....12
8.3 Support Resources.....12
8.4 Trademarks.....12
8.5 Electrostatic Discharge Caution.....12
8.6 Glossary.....12
9 Revision History.....12
10 Mechanical, Packaging, and Orderable Information.....13

Copyright © 2025 Texas Instruments Incorporated

3 Pin Configuration and Functions

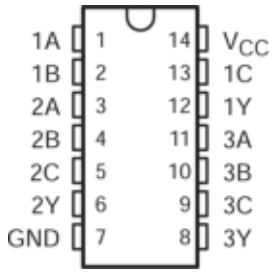

Figure 3-1. SN54ACT11 W Package; SN74ACT11 D, DB, N, or PW Package (Top View)

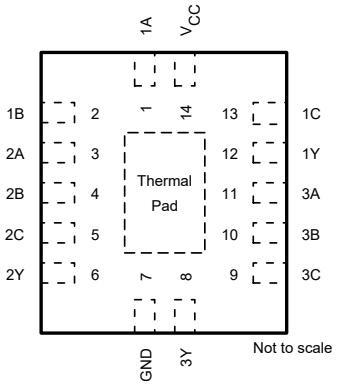

Figure 3-2. BQA Package, 14-Pin WQFN (Top View)

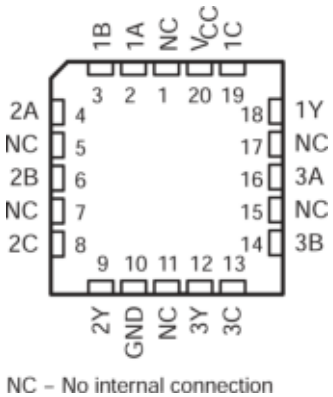

Figure 3-3. SN54ACT11 FK Package (Top View)

PIN		I/O[1]	DESCRIPTION
NAME	NO.		
1A	1	I	Channel 1, Input A
1B	2	I	Channel 1, Input B
2A	3	I	Channel 2, Input A
2B	4	I	Channel 2, Input B
2C	5	I	Channel 2, Input C
2Y	6	O	Channel 2, Output Y
GND	7	G	Ground
3Y	8	O	Channel 3, Output Y
3C	9	I	Channel 3, Input A
3B	10	I	Channel 3, Input B
3A	11	I	Channel 3, Input C
1Y	12	O	Channel 1, Output Y

Copyright © 2025 Texas Instruments Incorporated

PIN		I/O[1]	DESCRIPTION
NAME	NO.		
1C	13	I	Channel 1, Input C
V_{CC}	14	P	Positive Supply
Thermal pad[2]		—	The thermal pad can be connected to GND or left floating. Do not connect to any other signal or supply

(1) I = input, O = output, P = power, G = ground
(2) BQA Package only

Copyright © 2025 Texas Instruments Incorporated

4 Specifications

4.1 Absolute Maximum Ratings

over operating free-air temperature range (unless otherwise noted)[1]

			MIN	MAX	UNIT
V_{CC}	Supply voltage range		–0.5	7	V
V_I [2]	Input voltage range		-0.5	V_{CC} + 0.5	V
V_O [2]	Output voltage range		-0.5	V_{CC} + 0.5	V
I_{IK}	Input clamp current	(V_I < 0 or V_I > V_{CC})		±20	mA
I_{OK}	Output clamp current	(V_O < 0 or V_O > V_{CC})		±20	mA
I_O	Continuous output current	(V_O = 0 or V_{CC})		±50	mA
	Continuous current through V_{CC} or GND			±200	mA
T_{stg}	Storage temperature range		–65	150	°C

(1) Stresses beyond those listed under “absolute maximum ratings” may cause permanent damage to the device. These are stress ratings only, and functional operation of the device at these or any other conditions beyond those indicated under “recommended operating conditions” is not implied. Exposure to absolute-maximum-rated conditions for extended periods may affect device reliability.
(2) The input and output voltage ratings may be exceeded if the input and output current ratings are observed.

4.2 Recommended Operating Conditions

over operating free-air temperature range (unless otherwise noted)[1]

		SN54ACT11		SN74ACT11		UNIT
		MIN	MAX	MIN	MAX	
V_{CC}	Supply voltage	4.5	5.5	4.5	5.5	V
V_{IH}	High-level input voltage	2		2		V
V_{IL}	Low-level input voltage		0.8		0.8	V
V_I	Input voltage	0	V_{CC}	0	V_{CC}	V
V_O	Output voltage	0	V_{CC}	0	V_{CC}	V
I_{OH}	High-level output current		-24		-24	mA
I_{OL}	Low-level output current		24		24	mA
Δt/Δv	Input transition rise or fall rate		8		8	ns/V
T_A	Operating free-air temperature	-55	125	-40	85	°C

(1) All unused inputs of the device must be held at V_{CC} or GND to ensure proper device operation. Refer to the TI application report, *Implications of Slow or Floating CMOS Inputs*, literature number SCBA004.

4.3 Thermal Information

THERMAL METRIC[1]		SNx4ACT11						UNIT
		BQA (WQFN)	D (SOIC)	DB (SSOP)	N (PDIP)	NS (SOP)	PW (TSSOP)	
		14 PINS	14 PINS	14 PINS	14 PINS	14 PINS	14 PINS	
$R_{\theta JA}$	Junction-to-ambient thermal resistance	91.3	119.9	96	80	76	145.7	°C/W

(1) For more information about traditional and new thermal metrics, see the Semiconductor and IC Package Thermal Metrics application report.

4.4 Electrical Characteristics

over recommended operating free-air temperature range (unless otherwise noted)

PARAMETER	TEST CONDITIONS		V_{CC}	T_A = 25°C			SN54ACT11		SN74ACT11		UNIT
				MIN	TYP	MAX	MIN	MAX	MIN	MAX	
V_{OH}	I_{OH} = –50µA		4.5V	4.4	4.49		4.4		4.4		V
			5.5V	5.4	5.49		5.4		5.4		
	I_{OH} = –24mA		4.5V	3.86			3.7		3.76		
			5.5V	4.86			4.7		4.76		
	I_{OH} = –50mA(1)		5.5V				3.85				
	I_{OH} = –75mA(1)		5.5V						3.85		
V_{OL}	I_{OL} = 50µA		4.5V		0.001	0.1		0.1		0.1	V
			5.5V		0.001	0.1		0.1		0.1	
	I_{OL} = 24mA		4.5V			0.36		0.5		0.44	
			5.5V			0.36		0.5		0.44	
	I_{OL} = 50mA(1)		5.5V					1.65			
	I_{OL} = 75mA(1)		5.5V							1.65	
I_I	V_I = V_{CC} or GND		5.5V			±0.1		±1		±1	µA
I_{CC}	V_I = V_{CC} or GND,	I_O = 0	5.5V			2		40		20	µA
ΔI_{CC} (2)	One input at 3.4V, Other inputs at GND or V_{CC}		5.5 V		0.6			1.6		1.5	mA
C_i	V_I = V_{CC} or GND		5V		2.6						pF

(1) Not more than one output should be tested at a time, and the duration of the test should not exceed 10ms.
(2) This is the increase in supply current for each input that is at one of the specified TTL voltage levels, rather than 0V or V_{CC}.

4.5 Switching Characteristics

over recommended operating free-air temperature range, V_{CC} = 5V ± 0.5V (unless otherwise noted) (see Load Circuit and Voltage Waveforms)

PARAMETER	FROM (INPUT)	TO (OUTPUT)	T_A = 25°C			SN54ACT11		SN74ACT11		UNIT
			MIN	TYP	MAX	MIN	MAX	MIN	MAX	
t_{PLH}	A, B, or C	Y	1.5	6	9.5	1	10.5	1	10.5	ns
t_{PHL}			1.5	6	9.5	1	10.5	1	10.5	

4.6 Operating Characteristics

V_{CC} = 5V, T_A = 25°C

PARAMETER		TEST CONDITIONS		TYP	UNIT
C_{pd}	Power dissipation capacitance	C_L = 50pF,	f = 1MHz	20	pF

Copyright © 2025 Texas Instruments Incorporated

5 Parameter Measurement Information

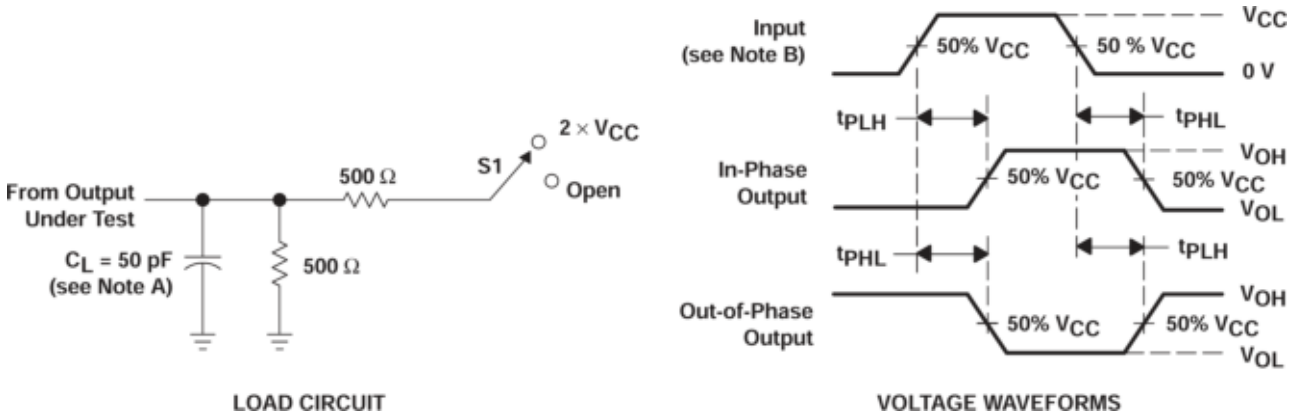

A. C_L includes probe and jig capacitance.

B. All input pulses are supplied by generators having the following characteristics: PRR ≤ 1 MHz, Z_O = 50 Ω, t_r ≤ 2.5 ns, t_f ≤ 2.5 ns.

C. The outputs are measured one at a time with one input transition per measurement.

Figure 5-1. Load Circuit and Voltage Waveforms

TEST	S1
t_{PLH}/t_{PHL}	Open

6 Detailed Description

6.1 Functional Block Diagram

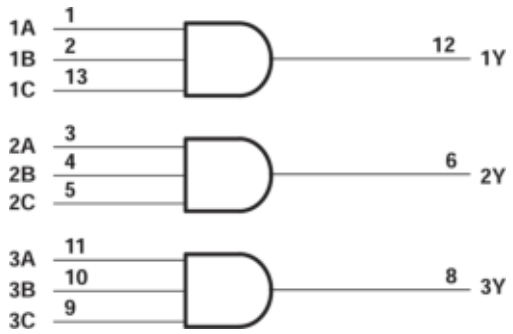

Figure 6-1. Logic Diagram, Each Gate (Positive Logic)

Pin numbers shown are for the D, DB, J, N, NS, PW, and W packages.

6.2 Device Functional Modes

Table 6-1. Function Table (Each Gate)

INPUTS			OUTPUT
A	B	C	Y
H	H	H	H
L	X	X	L
X	L	X	L
X	X	L	L

Copyright © 2025 Texas Instruments Incorporated

7 Application and Implementation

Note

Information in the following applications sections is not part of the TI component specification, and TI does not warrant its accuracy or completeness. TI's customers are responsible for determining suitability of components for their purposes, as well as validating and testing their design implementation to confirm system functionality.

7.1 Application Information

In this application, this device is used to directly control the RESET pin of a motor controller. The controller requires three input signals to all be HIGH before being enabled, and should be disabled in the event that any one signal goes LOW. The 3-input AND gate function combines the three individual reset signals into a single active-low reset signal.

7.2 Typical Application

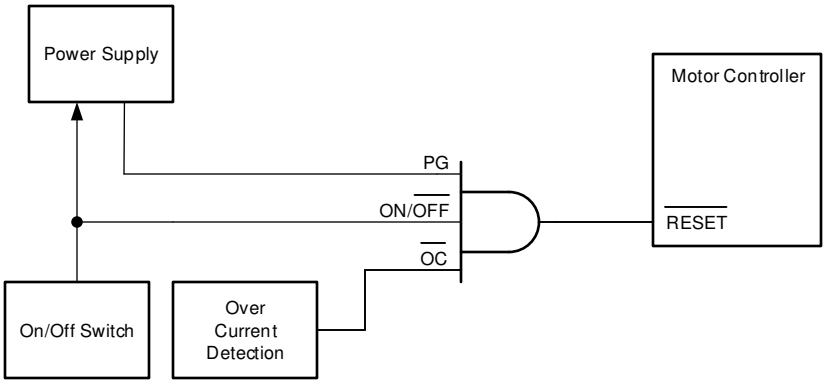

Figure 7-1. Typical application schematic

7.2.1 Design Requirements

7.2.1.1 Power Considerations

Ensure the desired supply voltage is within the range specified in the *Recommended Operating Conditions*. The supply voltage sets the device's electrical characteristics as described in the *Electrical Characteristics*.

The supply must be capable of sourcing current equal to the total current to be sourced by all outputs of the SN74HC11 plus the maximum supply current, I_{CC}, listed in the *Electrical Characteristics*. The logic device can only source or sink as much current as it is provided at the supply and ground pins, respectively. Be sure not to exceed the maximum total current through GND or V_{CC} listed in the *Absolute Maximum Ratings*.

Total power consumption can be calculated using the information provided in .CMOS Power Consumption and Cpd Calculation

Thermal increase can be calculated using the information provided in *Thermal Characteristics of Standard Linear and Logic (SSL) Packages and Devices*.

CAUTION

The maximum junction temperature, T_J(max) listed in the *Absolute Maximum Ratings*, is an *additional limitation* to prevent damage to the device. Do not violate any values listed in the *Absolute Maximum Ratings*. These limits are provided to prevent damage to the device.

7.2.1.2 Input Considerations

Unused inputs must be terminated to either V_{CC} or ground. These can be directly terminated if the input is completely unused, or they can be connected with a pull-up or pull-down resistor if the input is to be used sometimes, but not always. A pull-up resistor is used for a default state of HIGH, and a pull-down resistor is used for a default state of LOW. The resistor size is limited by drive current of the controller, leakage current into the SN74HC11, as specified in the *Electrical Characteristics*, and the desired input transition rate. A 10-kΩ resistor value is often used due to these factors.

The SN74HC11 has standard CMOS inputs, so input signal edge rates cannot be slow. Slow input edge rates can cause oscillations and damaging shoot-through current. The recommended rates are defined in the *Recommended Operating Conditions*.

Refer to *Feature Description* for additional information regarding the inputs for this device.

7.2.1.3 Output Considerations

The positive supply voltage is used to produce the output HIGH voltage. Drawing current from the output will decrease the output voltage as specified by the V_{OH} specification in the *Electrical Characteristics*. Similarly, the ground voltage is used to produce the output LOW voltage. Sinking current into the output will increase the output voltage as specified by the V_{OL} specification in the *Electrical Characteristics*.

Unused outputs can be left floating. Do not connect outputs directly to V_{CC} or ground.

Refer to *Feature Description* for additional information regarding the outputs for this device.

7.2.2 Detailed Design Procedure

1. Add a decoupling capacitor from V_{CC} to GND. The capacitor needs to be placed physically close to the device and electrically close to both the V_{CC} and GND pins. An example layout is shown in *Layout*.
2. Ensure the capacitive load at the output is ≤ 70 pF. This is not a hard limit, however it will ensure optimal performance. This can be accomplished by providing short, appropriately sized traces from the SN74HC11 to the receiving device.
3. Ensure the resistive load at the output is larger than (V_{CC} / I_O(max)) Ω. This will ensure that the maximum output current from the *Absolute Maximum Ratings* is not violated. Most CMOS inputs have a resistive load measured in megaohms; much larger than the minimum calculated above.
4. Thermal issues are rarely a concern for logic gates, however the power consumption and thermal increase can be calculated using the steps provided in the application report, CMOS Power Consumption and Cpd Calculation

7.2.3 Application Curves

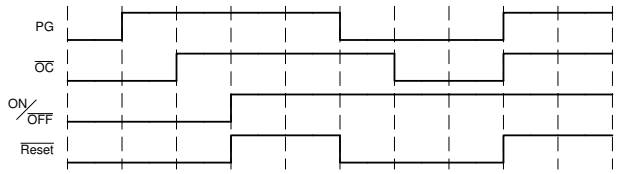

Figure 7-2. Typical application timing diagram

7.3 Power Supply Recommendations

The power supply can be any voltage between the minimum and maximum supply voltage rating located in the *Recommended Operating Conditions*. Each V_{CC} terminal should have a bypass capacitor to prevent power disturbance. A 0.1µF capacitor is recommended for this device. It is acceptable to parallel multiple bypass caps to reject different frequencies of noise. The 0.1µF and 1µF capacitors are commonly used in parallel. The bypass capacitor should be installed as close to the power terminal as possible for best results.

Copyright © 2025 Texas Instruments Incorporated

7.4 Layout

7.4.1 Layout Guidelines

When using multiple-input and multiple-channel logic devices inputs must not ever be left floating. In many cases, functions or parts of functions of digital logic devices are unused; for example, when only two inputs of a triple-input AND gate are used. Such unused input pins must not be left unconnected because the undefined voltages at the outside connections result in undefined operational states. All unused inputs of digital logic devices must be connected to a logic high or logic low voltage, as defined by the input voltage specifications, to prevent them from floating. The logic level that must be applied to any particular unused input depends on the function of the device. Generally, the inputs are tied to GND or V_{CC}, whichever makes more sense for the logic function or is more convenient.

Copyright © 2025 Texas Instruments Incorporated

8 Device and Documentation Support

8.1 Documentation Support (Analog)

8.1.1 Related Links

The table below lists quick access links. Categories include technical documents, support and community resources, tools and software, and quick access to sample or buy.

PARTS	PRODUCT FOLDER	SAMPLE & BUY	TECHNICAL DOCUMENTS	TOOLS & SOFTWARE	SUPPORT & COMMUNITY
SN54ACT11	Click here	Click here	Click here	Click here	Click here
SN74ACT11	Click here	Click here	Click here	Click here	Click here

8.2 Receiving Notification of Documentation Updates

To receive notification of documentation updates, navigate to the device product folder on ti.com. Click on *Notifications* to register and receive a weekly digest of any product information that has changed. For change details, review the revision history included in any revised document.

8.3 Support Resources

TI E2E™ support forums are an engineer's go-to source for fast, verified answers and design help — straight from the experts. Search existing answers or ask your own question to get the quick design help you need.

Linked content is provided "AS IS" by the respective contributors. They do not constitute TI specifications and do not necessarily reflect TI's views; see TI's Terms of Use.

8.4 Trademarks

TI E2E™ is a trademark of Texas Instruments.
All trademarks are the property of their respective owners.

8.5 Electrostatic Discharge Caution

This integrated circuit can be damaged by ESD. Texas Instruments recommends that all integrated circuits be handled with appropriate precautions. Failure to observe proper handling and installation procedures can cause damage.

ESD damage can range from subtle performance degradation to complete device failure. Precision integrated circuits may be more susceptible to damage because very small parametric changes could cause the device not to meet its published specifications.

8.6 Glossary

TI Glossary — This glossary lists and explains terms, acronyms, and definitions.

9 Revision History

NOTE: Page numbers for previous revisions may differ from page numbers in the current version.

Changes from Revision D (July 2024) to Revision E (February 2025) — **Page**

- Added BQA package to *Device Information* table, *Pin Configuration and Functions* section, and *Thermal Information* table 1

Changes from Revision C (October 2003) to Revision D (July 2024) — **Page**

- Added *Device Information* table, *Pin Functions* table, *Thermal Information* table, *Device Functional Modes,* Application and Implementation section, *Device and Documentation Support* section, and *Mechanical, Packaging, and Orderable Information* section 1
- Updated RθJA values: D = 86 to 119.9, PW = 113 to 145.7, all values in °C/W 5

Copyright © 2025 Texas Instruments Incorporated

10 Mechanical, Packaging, and Orderable Information

The following pages include mechanical, packaging, and orderable information. This information is the most current data available for the designated devices. This data is subject to change without notice and revision of this document. For browser-based versions of this data sheet, refer to the left-hand navigation.

PACKAGING INFORMATION

Orderable part number	Status (1)	Material type (2)	Package | Pins	Package qty | Carrier	RoHS (3)	Lead finish/ Ball material (4)	MSL rating/ Peak reflow (5)	Op temp (°C)	Part marking (6)
5962-9077201Q2A	Active	Production	LCCC (FK) | 20	55 | TUBE	No	SNPB	N/A for Pkg Type	-55 to 125	5962-9077201Q2A SNJ54ACT 11FK
5962-9077201QDA	Active	Production	CFP (W) | 14	25 | TUBE	No	SNPB	N/A for Pkg Type	-55 to 125	5962-9077201QDA SNJ54ACT11W
SN74ACT11BQAR	Active	Production	WQFN (BQA) | 14	3000 | LARGE T&R	Yes	NIPDAU	Level-1-260C-UNLIM	-40 to 85	AD11
SN74ACT11BQAR.A	Active	Production	WQFN (BQA) | 14	3000 | LARGE T&R	Yes	NIPDAU	Level-1-260C-UNLIM	-40 to 85	AD11
SN74ACT11D	Obsolete	Production	SOIC (D) | 14	-	-	Call TI	Call TI	-40 to 85	ACT11
SN74ACT11DBR	Active	Production	SSOP (DB) | 14	2000 | LARGE T&R	Yes	NIPDAU	Level-1-260C-UNLIM	-40 to 85	AD11
SN74ACT11DBR.A	Active	Production	SSOP (DB) | 14	2000 | LARGE T&R	Yes	NIPDAU	Level-1-260C-UNLIM	-40 to 85	AD11
SN74ACT11DR	Active	Production	SOIC (D) | 14	2500 | LARGE T&R	Yes	NIPDAU	Level-1-260C-UNLIM	-40 to 85	ACT11
SN74ACT11DR.A	Active	Production	SOIC (D) | 14	2500 | LARGE T&R	Yes	NIPDAU	Level-1-260C-UNLIM	-40 to 85	ACT11
SN74ACT11DRG4	Active	Production	SOIC (D) | 14	2500 | LARGE T&R	Yes	NIPDAU	Level-1-260C-UNLIM	-40 to 85	ACT11
SN74ACT11N	Active	Production	PDIP (N) | 14	25 | TUBE	Yes	NIPDAU	N/A for Pkg Type	-40 to 85	SN74ACT11N
SN74ACT11N.A	Active	Production	PDIP (N) | 14	25 | TUBE	Yes	NIPDAU	N/A for Pkg Type	-40 to 85	SN74ACT11N
SN74ACT11PW	Obsolete	Production	TSSOP (PW) | 14	-	-	Call TI	Call TI	-40 to 85	AD11
SN74ACT11PWR	Active	Production	TSSOP (PW) | 14	2000 | LARGE T&R	Yes	NIPDAU | SN	Level-1-260C-UNLIM	-40 to 85	AD11
SN74ACT11PWR.A	Active	Production	TSSOP (PW) | 14	2000 | LARGE T&R	Yes	NIPDAU	Level-1-260C-UNLIM	-40 to 85	AD11
SNJ54ACT11FK	Active	Production	LCCC (FK) | 20	55 | TUBE	No	SNPB	N/A for Pkg Type	-55 to 125	5962-9077201Q2A SNJ54ACT 11FK
SNJ54ACT11FK.A	Active	Production	LCCC (FK) | 20	55 | TUBE	No	SNPB	N/A for Pkg Type	-55 to 125	5962-9077201Q2A SNJ54ACT 11FK
SNJ54ACT11W	Active	Production	CFP (W) | 14	25 | TUBE	No	SNPB	N/A for Pkg Type	-55 to 125	5962-9077201QDA SNJ54ACT11W

Orderable part number	Status (1)	Material type (2)	Package | Pins	Package qty | Carrier	RoHS (3)	Lead finish/ Ball material (4)	MSL rating/ Peak reflow (5)	Op temp (°C)	Part marking (6)
SNJ54ACT11W.A	Active	Production	CFP (W) | 14	25 | TUBE	No	SNPB	N/A for Pkg Type	-55 to 125	5962-9077201QD A SNJ54ACT11W

(1) **Status:** For more details on status, see our product life cycle.

(2) **Material type:** When designated, preproduction parts are prototypes/experimental devices, and are not yet approved or released for full production. Testing and final process, including without limitation quality assurance, reliability performance testing, and/or process qualification, may not yet be complete, and this item is subject to further changes or possible discontinuation. If available for ordering, purchases will be subject to an additional waiver at checkout, and are intended for early internal evaluation purposes only. These items are sold without warranties of any kind.

(3) **RoHS values:** Yes, No, RoHS Exempt. See the TI RoHS Statement for additional information and value definition.

(4) **Lead finish/Ball material:** Parts may have multiple material finish options. Finish options are separated by a vertical ruled line. Lead finish/Ball material values may wrap to two lines if the finish value exceeds the maximum column width.

(5) **MSL rating/Peak reflow:** The moisture sensitivity level ratings and peak solder (reflow) temperatures. In the event that a part has multiple moisture sensitivity ratings, only the lowest level per JEDEC standards is shown. Refer to the shipping label for the actual reflow temperature that will be used to mount the part to the printed circuit board.

(6) **Part marking:** There may be an additional marking, which relates to the logo, the lot trace code information, or the environmental category of the part.

Multiple part markings will be inside parentheses. Only one part marking contained in parentheses and separated by a "~" will appear on a part. If a line is indented then it is a continuation of the previous line and the two combined represent the entire part marking for that device.

Important Information and Disclaimer: The information provided on this page represents TI's knowledge and belief as of the date that it is provided. TI bases its knowledge and belief on information provided by third parties, and makes no representation or warranty as to the accuracy of such information. Efforts are underway to better integrate information from third parties. TI has taken and continues to take reasonable steps to provide representative and accurate information but may not have conducted destructive testing or chemical analysis on incoming materials and chemicals. TI and TI suppliers consider certain information to be proprietary, and thus CAS numbers and other limited information may not be available for release.

In no event shall TI's liability arising out of such information exceed the total purchase price of the TI part(s) at issue in this document sold by TI to Customer on an annual basis.

OTHER QUALIFIED VERSIONS OF SN54ACT11, SN74ACT11 :

- Catalog : SN74ACT11
- Automotive : SN74ACT11-Q1, SN74ACT11-Q1

- Military : SN54ACT11

NOTE: Qualified Version Definitions:

- Catalog - TI's standard catalog product
- Automotive - Q100 devices qualified for high-reliability automotive applications targeting zero defects
- Military - QML certified for Military and Defense Applications

TAPE AND REEL INFORMATION

REEL DIMENSIONS

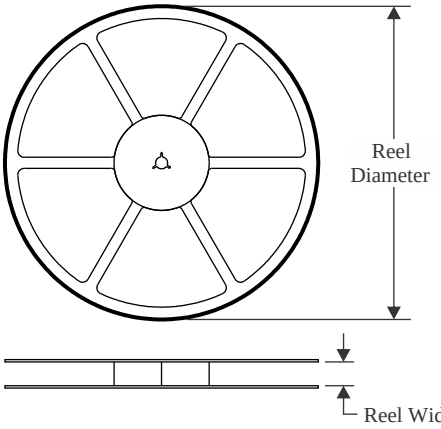

TAPE DIMENSIONS

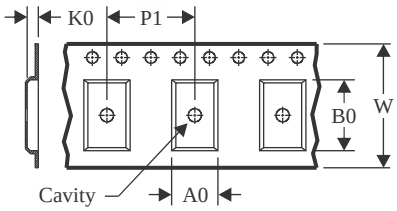

A0	Dimension designed to accommodate the component width
B0	Dimension designed to accommodate the component length
K0	Dimension designed to accommodate the component thickness
W	Overall width of the carrier tape
P1	Pitch between successive cavity centers

QUADRANT ASSIGNMENTS FOR PIN 1 ORIENTATION IN TAPE

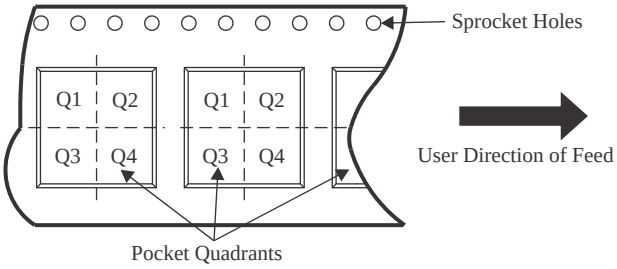

*All dimensions are nominal

Device	Package Type	Package Drawing	Pins	SPQ	Reel Diameter (mm)	Reel Width W1 (mm)	A0 (mm)	B0 (mm)	K0 (mm)	P1 (mm)	W (mm)	Pin1 Quadrant
SN74ACT11BQAR	WQFN	BQA	14	3000	180.0	12.4	2.8	3.3	1.1	4.0	12.0	Q1
SN74ACT11DBR	SSOP	DB	14	2000	330.0	16.4	8.35	6.6	2.4	12.0	16.0	Q1
SN74ACT11DR	SOIC	D	14	2500	330.0	16.4	6.5	9.0	2.1	8.0	16.0	Q1
SN74ACT11PWR	TSSOP	PW	14	2000	330.0	12.4	6.9	5.6	1.6	8.0	12.0	Q1

TAPE AND REEL BOX DIMENSIONS

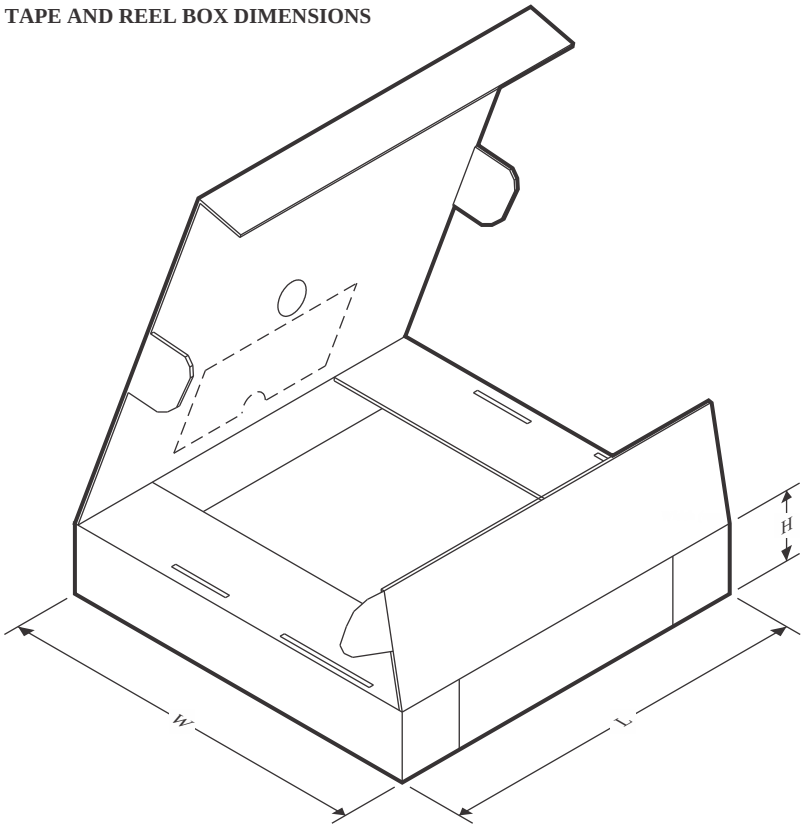

*All dimensions are nominal

Device	Package Type	Package Drawing	Pins	SPQ	Length (mm)	Width (mm)	Height (mm)
SN74ACT11BQAR	WQFN	BQA	14	3000	210.0	185.0	35.0
SN74ACT11DBR	SSOP	DB	14	2000	353.0	353.0	32.0
SN74ACT11DR	SOIC	D	14	2500	353.0	353.0	32.0
SN74ACT11PWR	TSSOP	PW	14	2000	353.0	353.0	32.0

TUBE

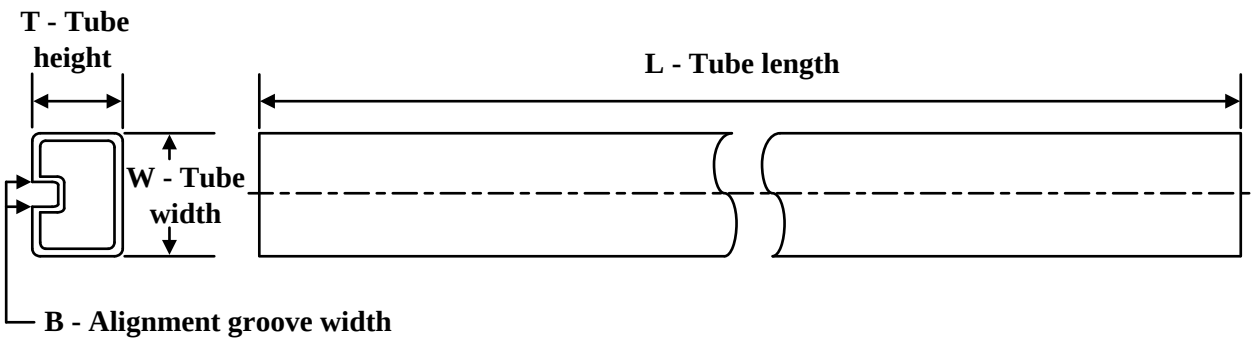

*All dimensions are nominal

Device	Package Name	Package Type	Pins	SPQ	L (mm)	W (mm)	T (µm)	B (mm)
5962-9077201Q2A	FK	LCCC	20	55	506.98	12.06	2030	NA
5962-9077201QDA	W	CFP	14	25	506.98	26.16	6220	NA
SN74ACT11N	N	PDIP	14	25	506	13.97	11230	4.32
SN74ACT11N	N	PDIP	14	25	506	13.97	11230	4.32
SN74ACT11N.A	N	PDIP	14	25	506	13.97	11230	4.32
SN74ACT11N.A	N	PDIP	14	25	506	13.97	11230	4.32
SNJ54ACT11FK	FK	LCCC	20	55	506.98	12.06	2030	NA
SNJ54ACT11FK.A	FK	LCCC	20	55	506.98	12.06	2030	NA
SNJ54ACT11W	W	CFP	14	25	506.98	26.16	6220	NA
SNJ54ACT11W.A	W	CFP	14	25	506.98	26.16	6220	NA

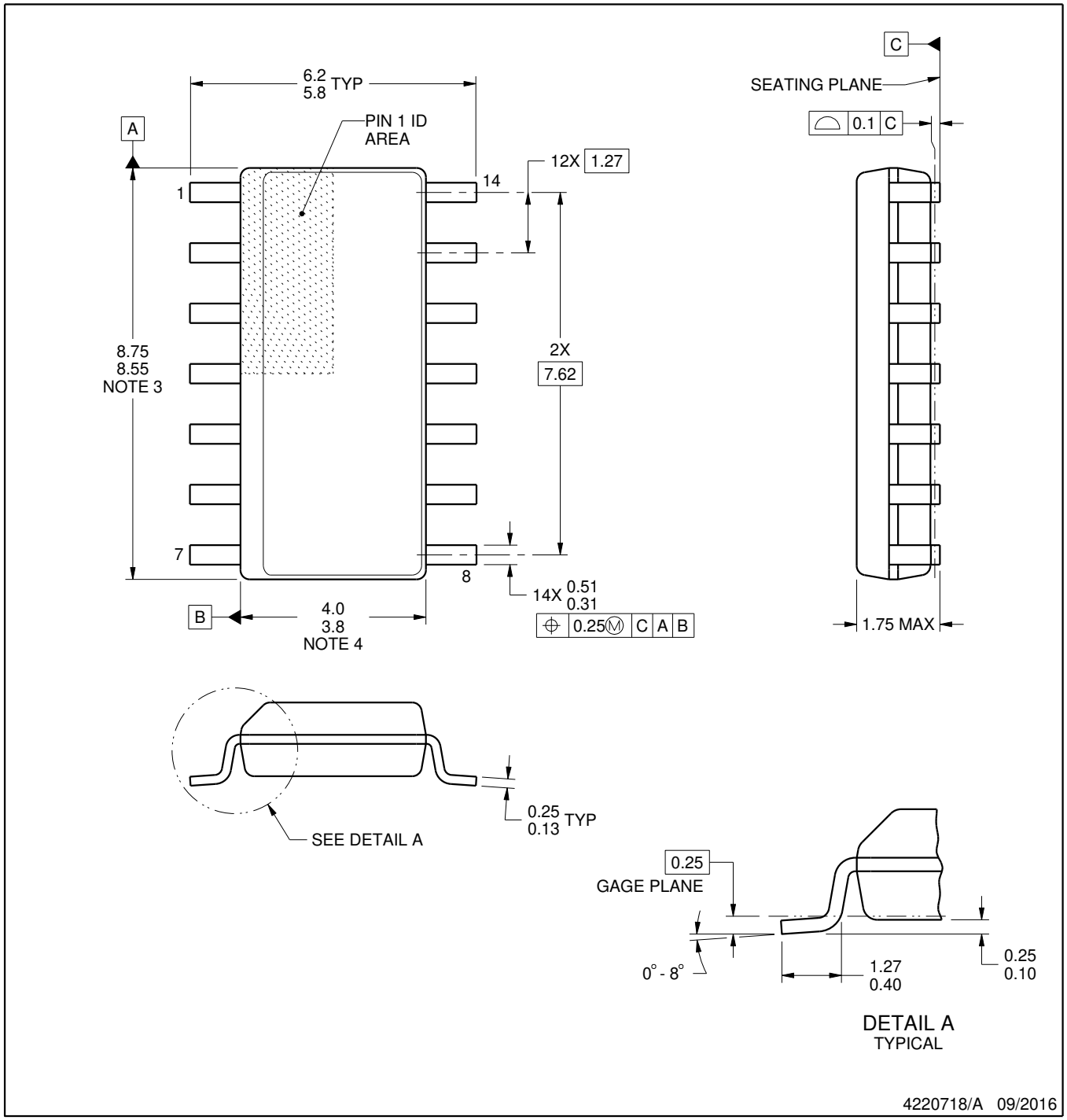

NOTES:

1. All linear dimensions are in millimeters. Dimensions in parenthesis are for reference only. Dimensioning and tolerancing per ASME Y14.5M.
2. This drawing is subject to change without notice.
3. This dimension does not include mold flash, protrusions, or gate burrs. Mold flash, protrusions, or gate burrs shall not exceed 0.15 mm, per side.
4. This dimension does not include interlead flash. Interlead flash shall not exceed 0.43 mm, per side.
5. Reference JEDEC registration MS-012, variation AB.

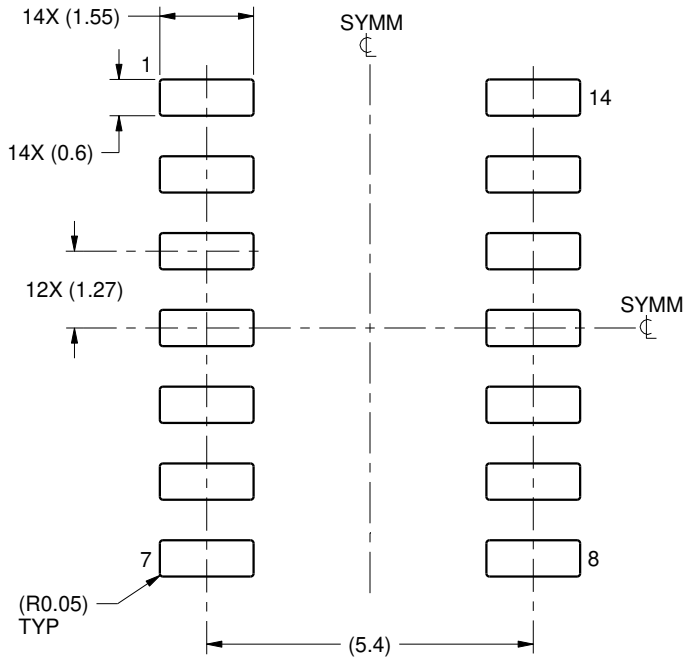

LAND PATTERN EXAMPLE
SCALE:8X

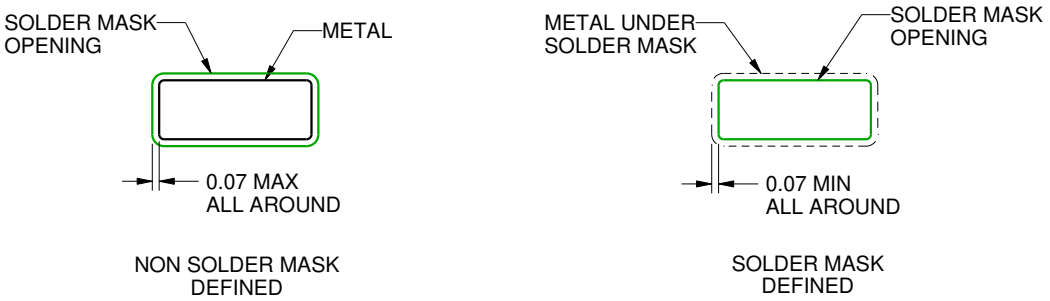

SOLDER MASK DETAILS

4220718/A 09/2016

NOTES: (continued)

6. Publication IPC-7351 may have alternate designs.
7. Solder mask tolerances between and around signal pads can vary based on board fabrication site.

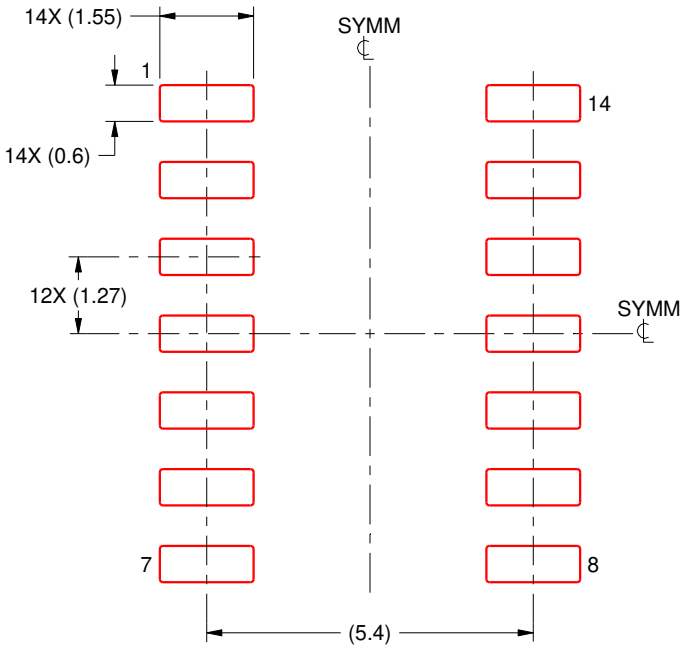

SOLDER PASTE EXAMPLE
BASED ON 0.125 mm THICK STENCIL
SCALE:8X

4220718/A 09/2016

NOTES: (continued)

8. Laser cutting apertures with trapezoidal walls and rounded corners may offer better paste release. IPC-7525 may have alternate design recommendations.
9. Board assembly site may have different recommendations for stencil design.

GENERIC PACKAGE VIEW

BQA 14

WQFN - 0.8 mm max height

2.5 x 3, 0.5 mm pitch

PLASTIC QUAD FLATPACK - NO LEAD

This image is a representation of the package family, actual package may vary.
Refer to the product data sheet for package details.

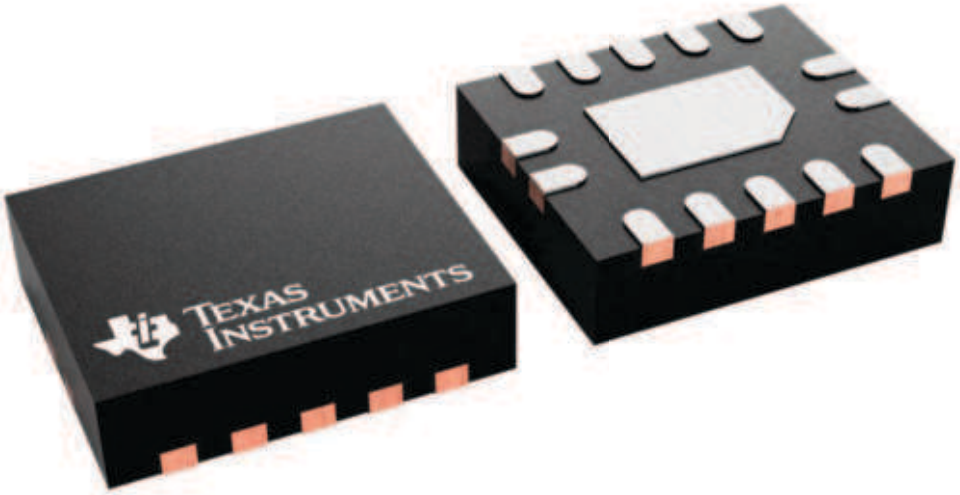

4227145/A

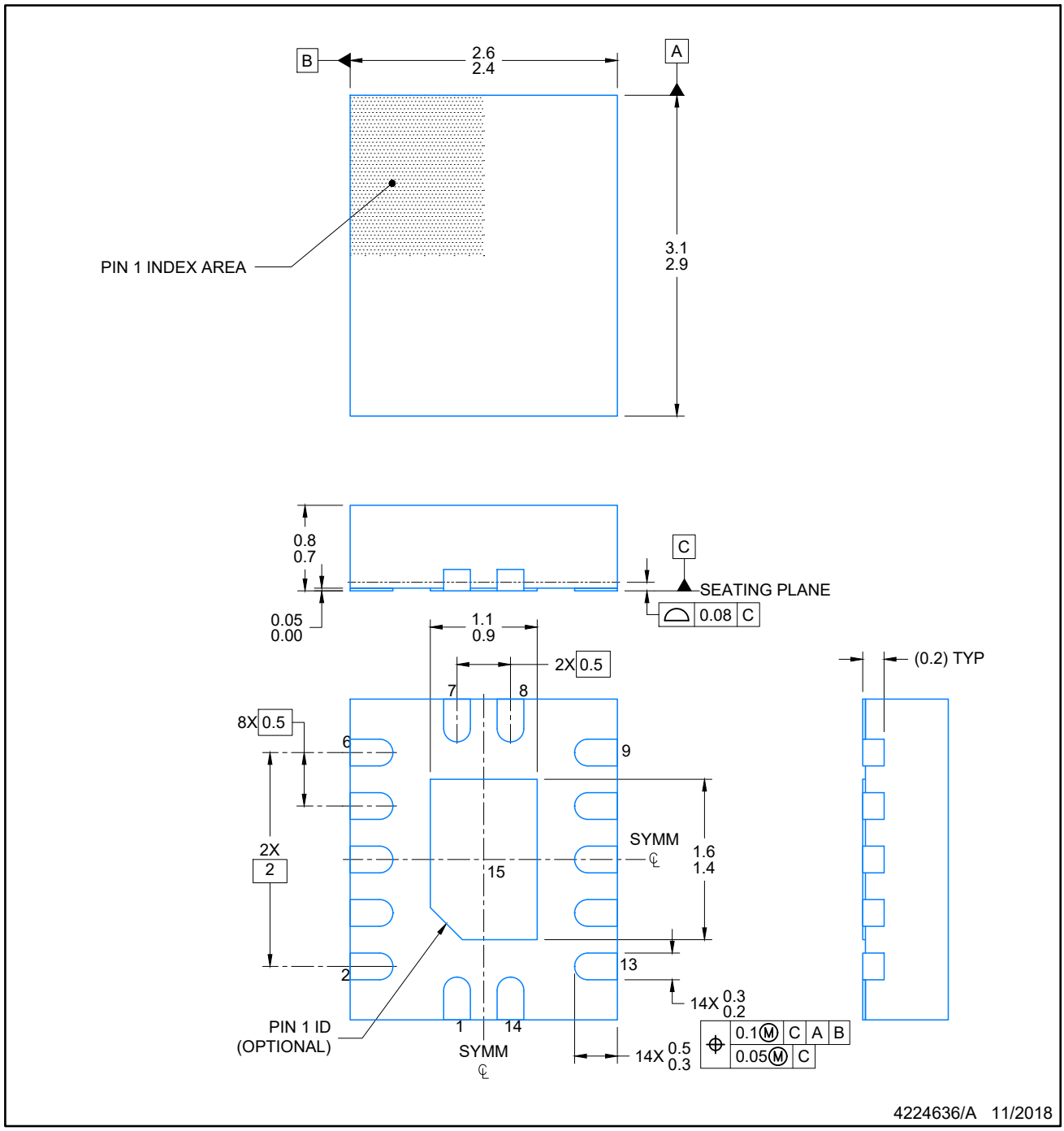

NOTES:

1. All linear dimensions are in millimeters. Any dimensions in parenthesis are for reference only. Dimensioning and tolerancing per ASME Y14.5M.
2. This drawing is subject to change without notice.
3. The package thermal pad must be soldered to the printed circuit board for optimal thermal and mechanical performance.

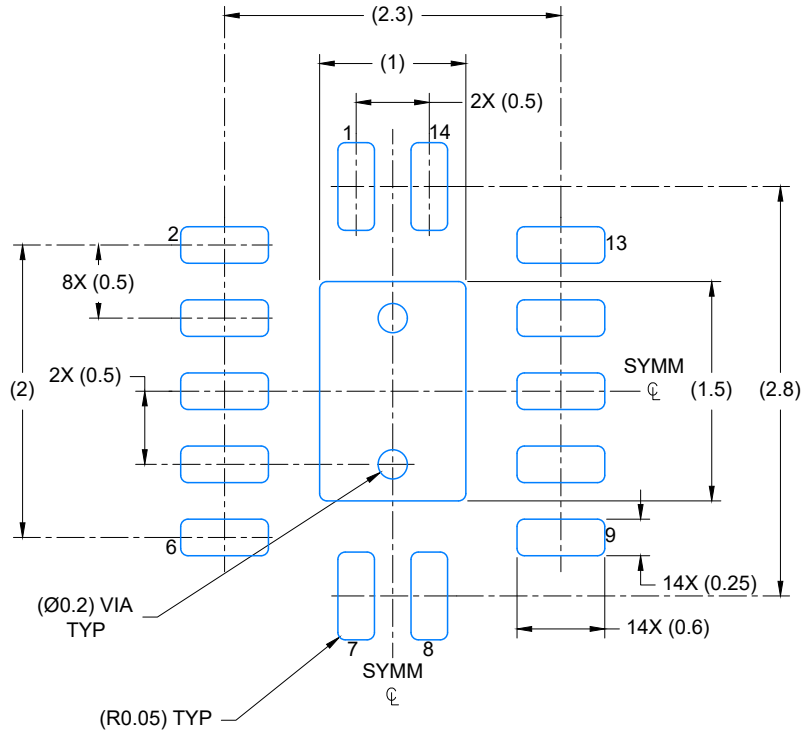

LAND PATTERN EXAMPLE
EXPOSED METAL SHOWN
SCALE: 20X

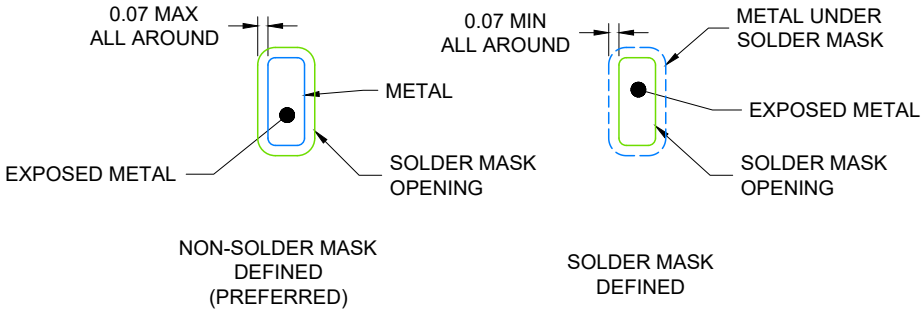

4224636/A 11/2018

NOTES: (continued)

4. This package is designed to be soldered to a thermal pad on the board. For more information, see Texas Instruments literature number SLUA271 (www.ti.com/lit/slua271).
5. Vias are optional depending on application, refer to device data sheet. If any vias are implemented, refer to their locations shown on this view. It is recommended that vias under paste be filled, plugged or tented.

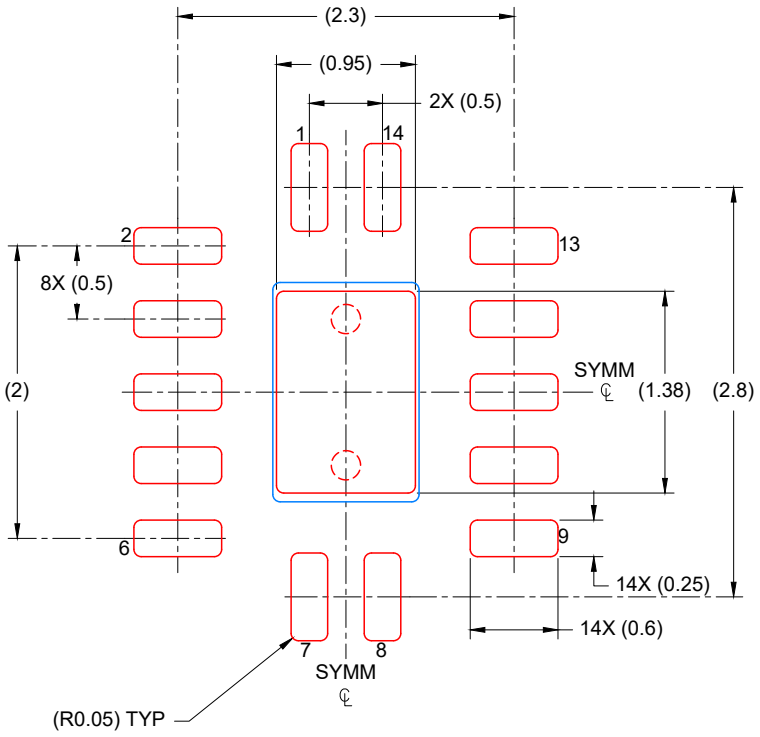

SOLDER PASTE EXAMPLE
BASED ON 0.125 mm THICK STENCIL

EXPOSED PAD
88% PRINTED COVERAGE BY AREA
SCALE: 20X

4224636/A 11/2018

NOTES: (continued)

6. Laser cutting apertures with trapezoidal walls and rounded corners may offer better paste release. IPC-7525 may have alternate design recommendations.

W (R–GDFP–F14) CERAMIC DUAL FLATPACK

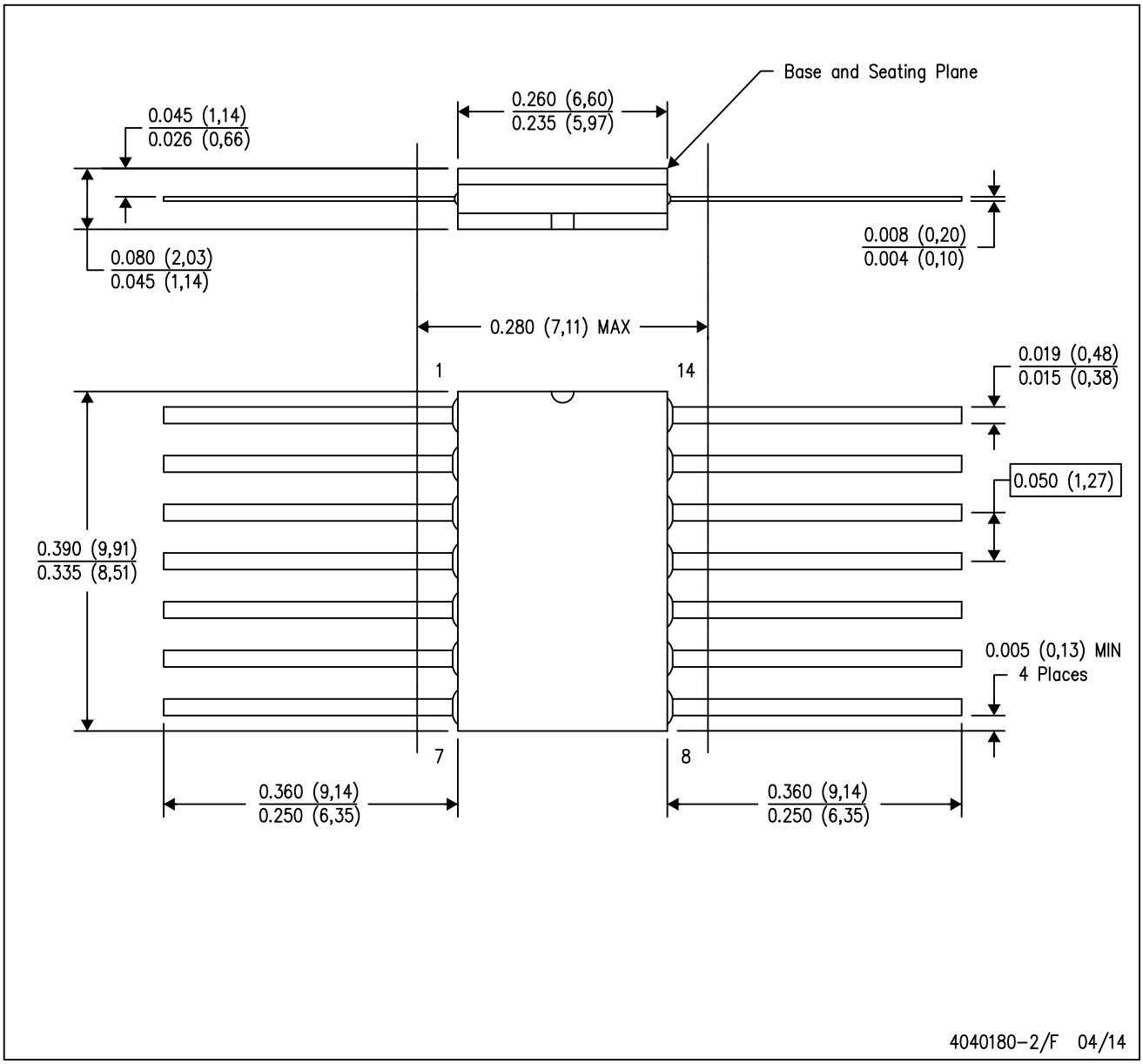

NOTES:
A. All linear dimensions are in inches (millimeters).
B. This drawing is subject to change without notice.
C. This package can be hermetically sealed with a ceramic lid using glass frit.
D. Index point is provided on cap for terminal identification only.
E. Falls within MIL STD 1835 GDFP1–F14

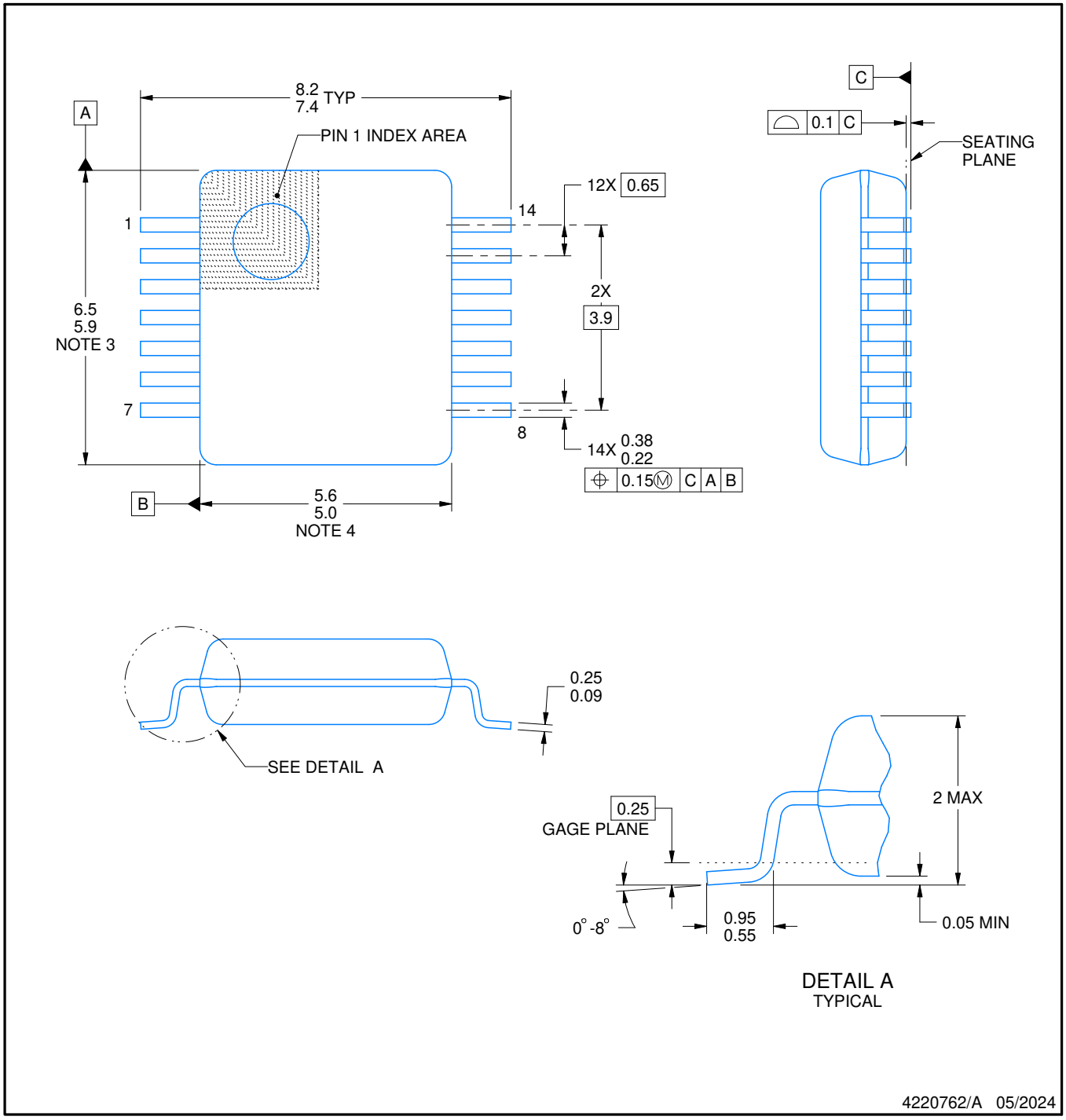

NOTES:

1. All linear dimensions are in millimeters. Any dimensions in parenthesis are for reference only. Dimensioning and tolerancing per ASME Y14.5M.
2. This drawing is subject to change without notice.
3. This dimension does not include mold flash, protrusions, or gate burrs. Mold flash, protrusions, or gate burrs shall not exceed 0.15 mm per side.
4. Reference JEDEC registration MO-150.

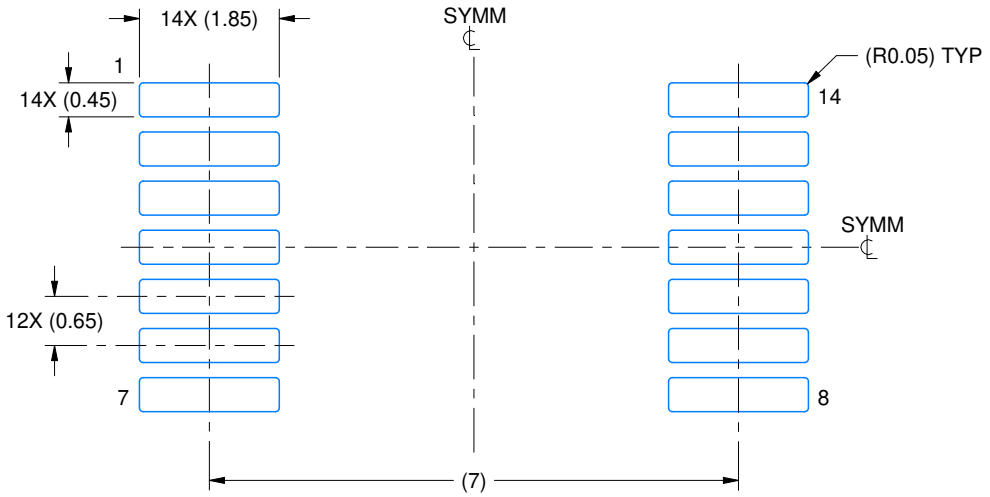

LAND PATTERN EXAMPLE
EXPOSED METAL SHOWN
SCALE: 10X

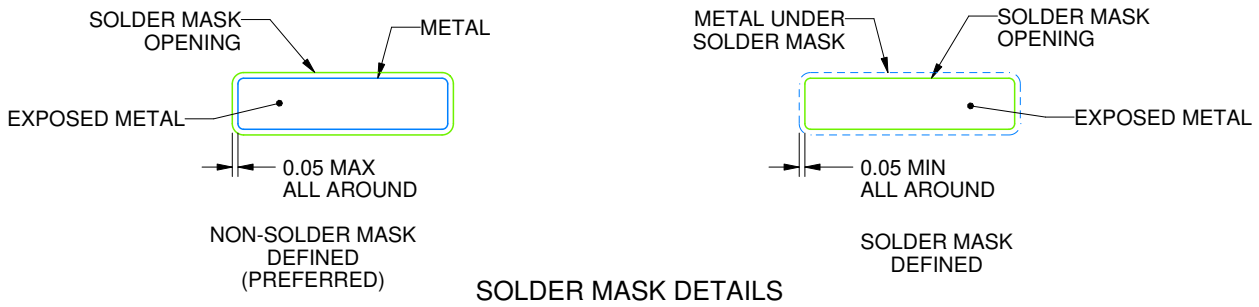

SOLDER MASK DETAILS

4220762/A 05/2024

NOTES: (continued)

5. Publication IPC-7351 may have alternate designs.
6. Solder mask tolerances between and around signal pads can vary based on board fabrication site.

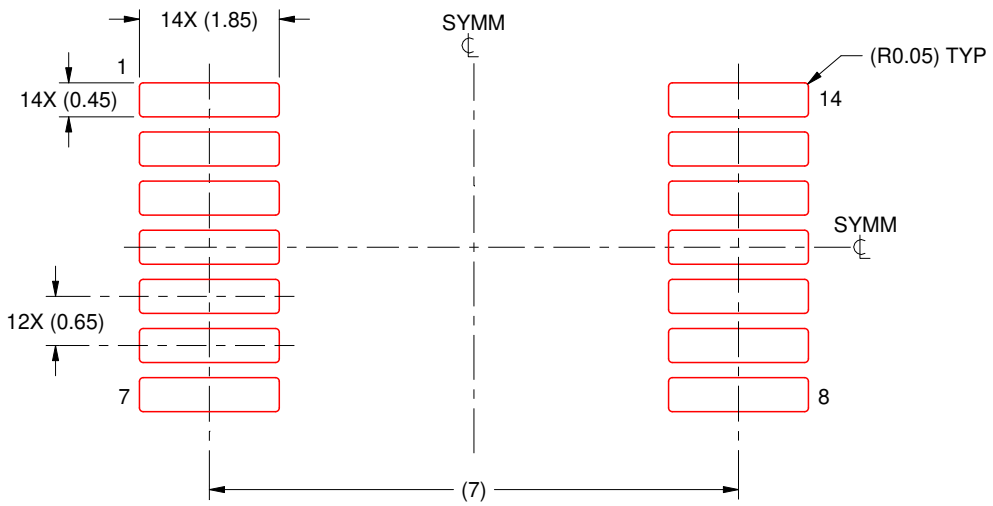

SOLDER PASTE EXAMPLE
BASED ON 0.125 mm THICK STENCIL
SCALE: 10X

4220762/A 05/2024

NOTES: (continued)

7. Laser cutting apertures with trapezoidal walls and rounded corners may offer better paste release. IPC-7525 may have alternate design recommendations.
8. Board assembly site may have different recommendations for stencil design.

GENERIC PACKAGE VIEW

FK 20

LCCC - 2.03 mm max height

8.89 x 8.89, 1.27 mm pitch

LEADLESS CERAMIC CHIP CARRIER

This image is a representation of the package family, actual package may vary.
Refer to the product data sheet for package details.

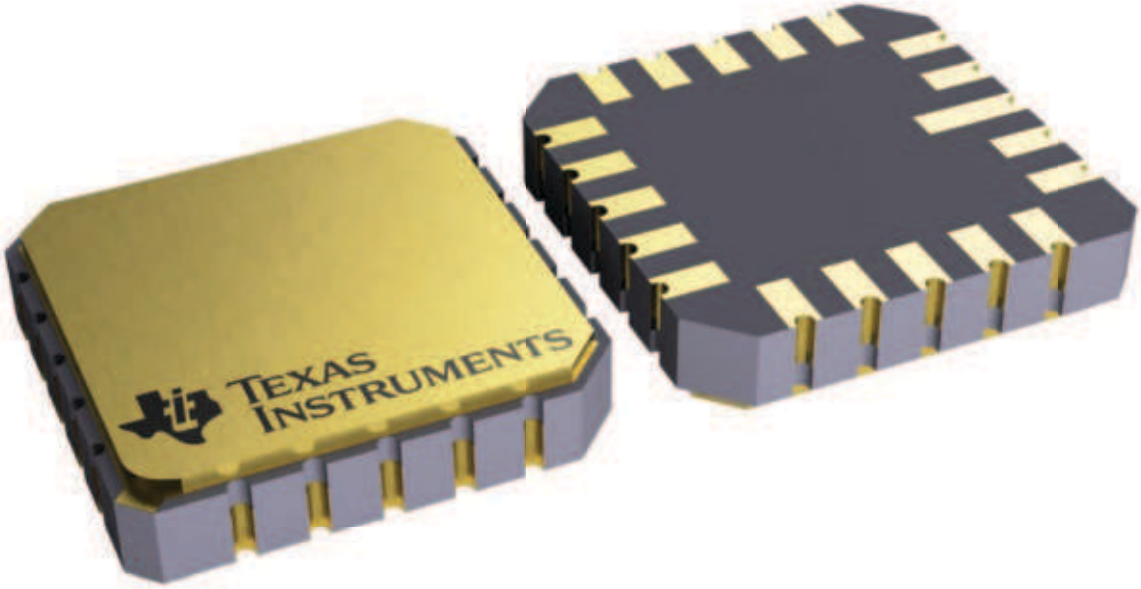

4229370\VA\

N (R–PDIP–T**) PLASTIC DUAL–IN–LINE PACKAGE

16 PINS SHOWN

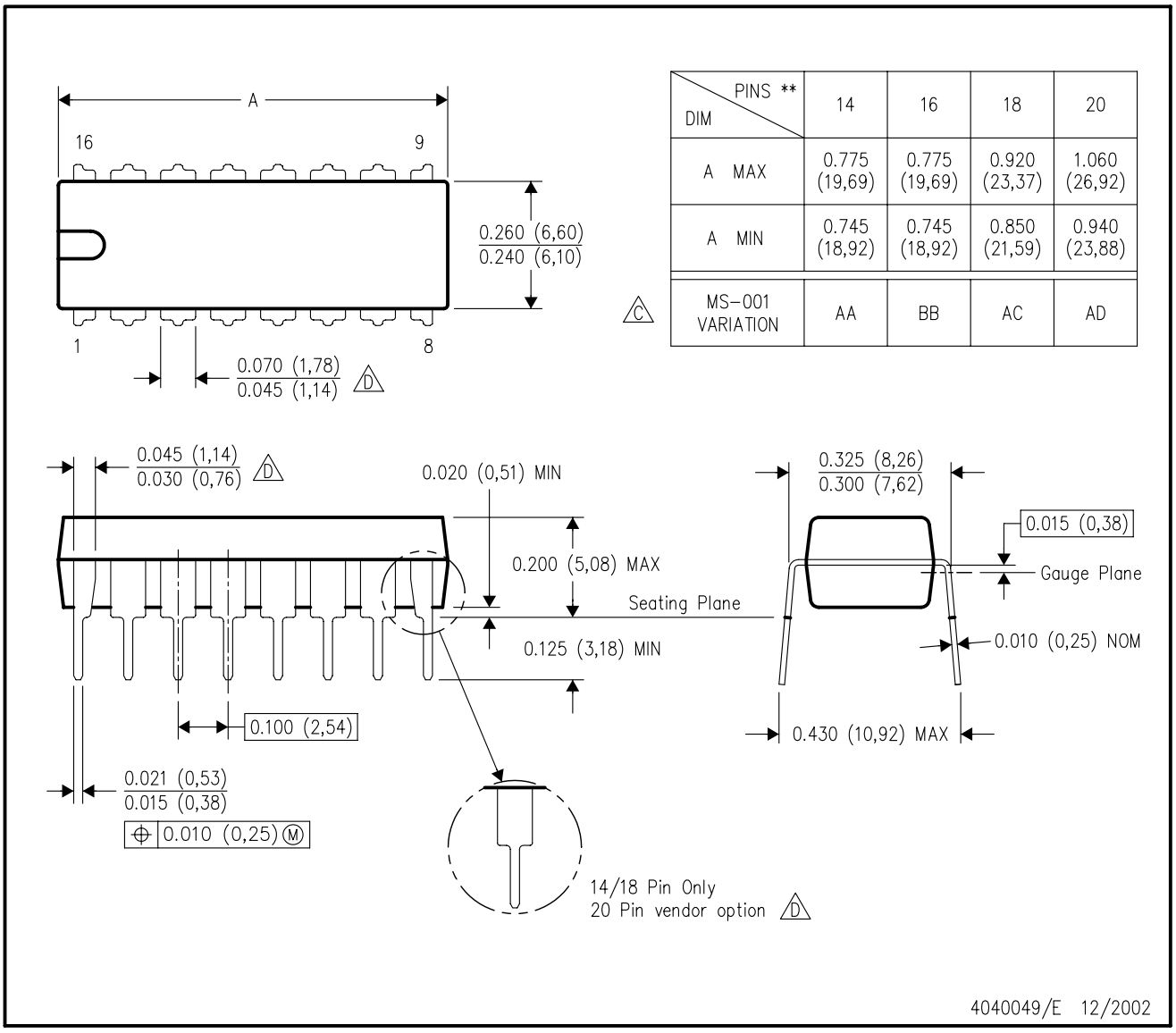

DIM \ PINS **	14	16	18	20
A MAX	0.775 (19,69)	0.775 (19,69)	0.920 (23,37)	1.060 (26,92)
A MIN	0.745 (18,92)	0.745 (18,92)	0.850 (21,59)	0.940 (23,88)
MS–001 VARIATION (C)	AA	BB	AC	AD

NOTES:
A. All linear dimensions are in inches (millimeters).
B. This drawing is subject to change without notice.
C. Falls within JEDEC MS–001, except 18 and 20 pin minimum body length (Dim A).
D. The 20 pin end lead shoulder width is a vendor option, either half or full width.

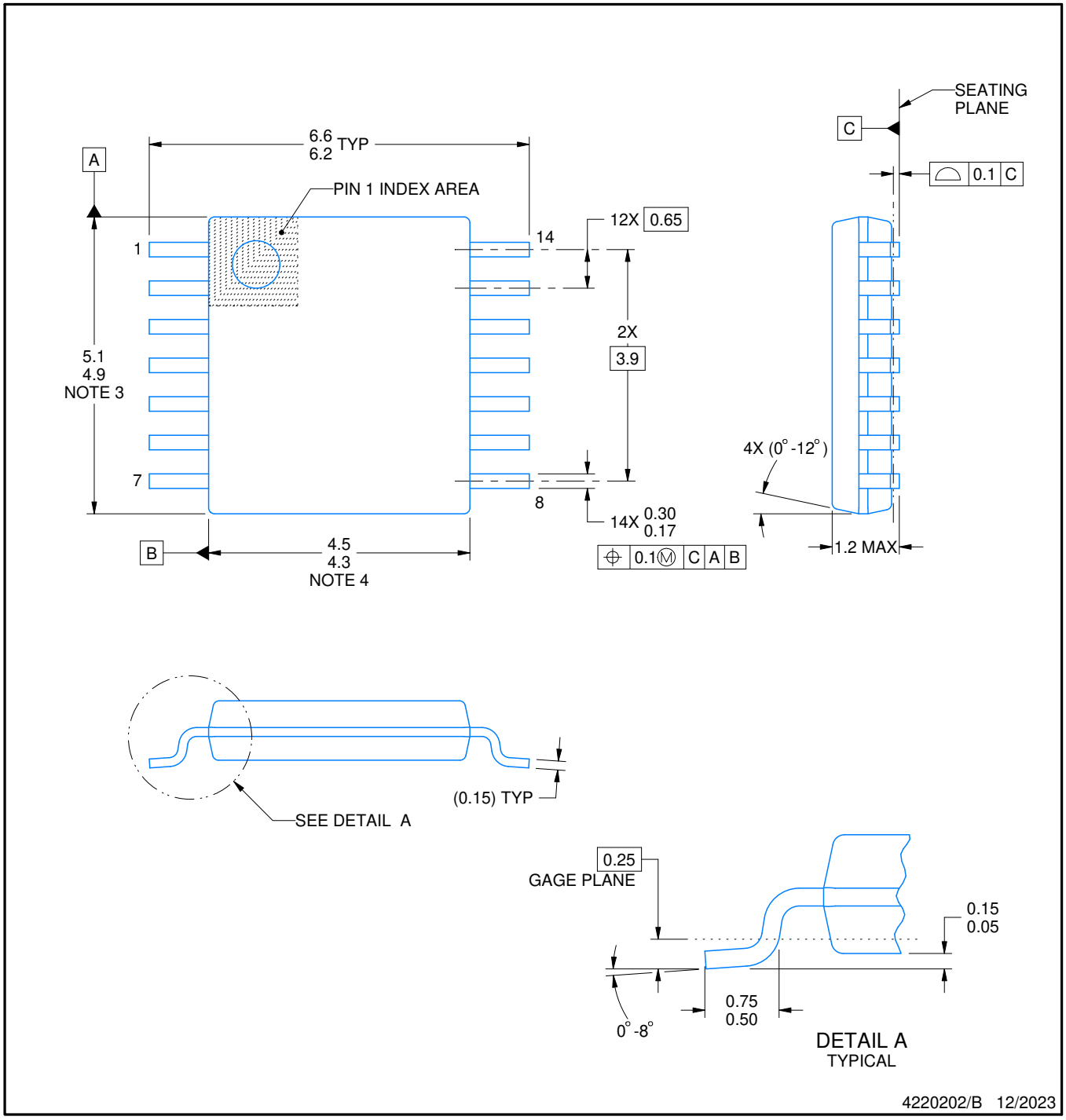

NOTES:

1. All linear dimensions are in millimeters. Any dimensions in parenthesis are for reference only. Dimensioning and tolerancing per ASME Y14.5M.
2. This drawing is subject to change without notice.
3. This dimension does not include mold flash, protrusions, or gate burrs. Mold flash, protrusions, or gate burrs shall not exceed 0.15 mm per side.
4. This dimension does not include interlead flash. Interlead flash shall not exceed 0.25 mm per side.
5. Reference JEDEC registration MO-153.

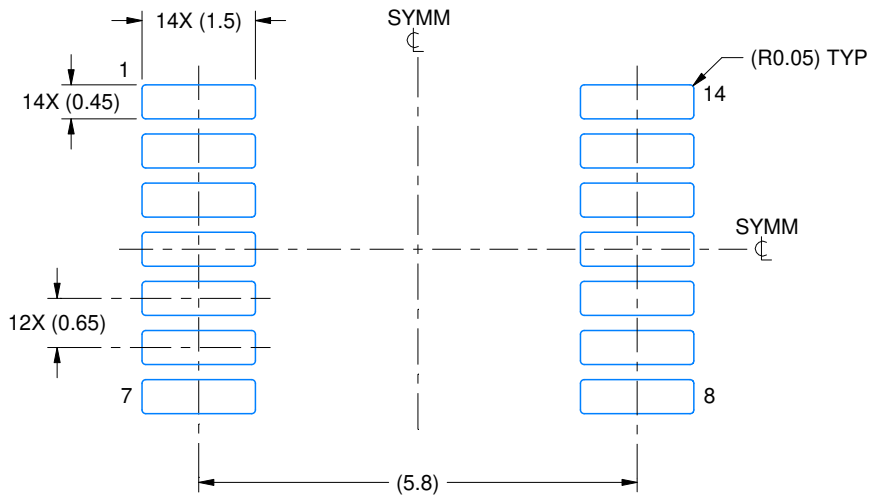

LAND PATTERN EXAMPLE
EXPOSED METAL SHOWN
SCALE: 10X

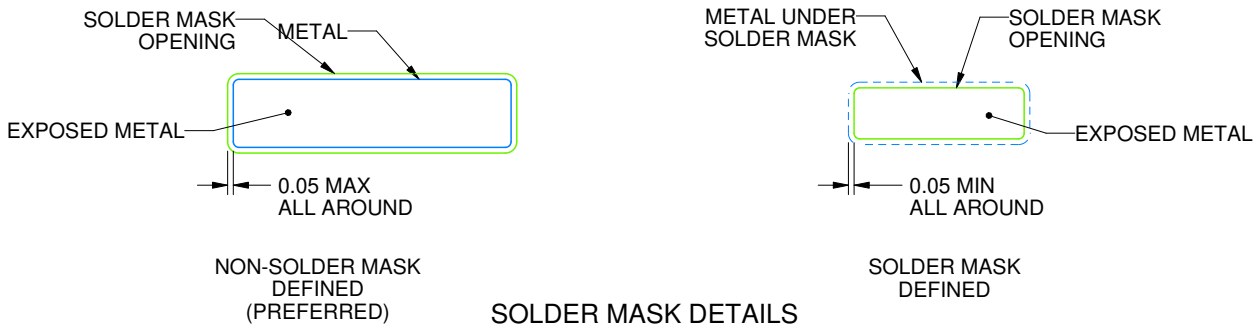

SOLDER MASK DETAILS

4220202/B 12/2023

NOTES: (continued)

6. Publication IPC-7351 may have alternate designs.
7. Solder mask tolerances between and around signal pads can vary based on board fabrication site.

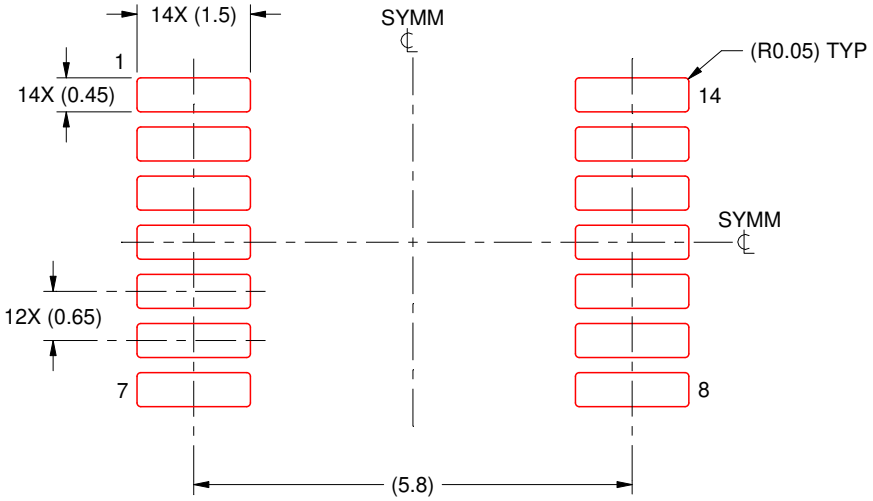

SOLDER PASTE EXAMPLE
BASED ON 0.125 mm THICK STENCIL
SCALE: 10X

4220202/B 12/2023

NOTES: (continued)

8. Laser cutting apertures with trapezoidal walls and rounded corners may offer better paste release. IPC-7525 may have alternate design recommendations.
9. Board assembly site may have different recommendations for stencil design.

IMPORTANT NOTICE AND DISCLAIMER

TI PROVIDES TECHNICAL AND RELIABILITY DATA (INCLUDING DATASHEETS), DESIGN RESOURCES (INCLUDING REFERENCE DESIGNS), APPLICATION OR OTHER DESIGN ADVICE, WEB TOOLS, SAFETY INFORMATION, AND OTHER RESOURCES “AS IS” AND WITH ALL FAULTS, AND DISCLAIMS ALL WARRANTIES, EXPRESS AND IMPLIED, INCLUDING WITHOUT LIMITATION ANY IMPLIED WARRANTIES OF MERCHANTABILITY, FITNESS FOR A PARTICULAR PURPOSE OR NON-INFRINGEMENT OF THIRD PARTY INTELLECTUAL PROPERTY RIGHTS.

These resources are intended for skilled developers designing with TI products. You are solely responsible for (1) selecting the appropriate TI products for your application, (2) designing, validating and testing your application, and (3) ensuring your application meets applicable standards, and any other safety, security, regulatory or other requirements.

These resources are subject to change without notice. TI grants you permission to use these resources only for development of an application that uses the TI products described in the resource. Other reproduction and display of these resources is prohibited. No license is granted to any other TI intellectual property right or to any third party intellectual property right. TI disclaims responsibility for, and you fully indemnify TI and its representatives against any claims, damages, costs, losses, and liabilities arising out of your use of these resources.

TI’s products are provided subject to TI’s Terms of Sale, TI’s General Quality Guidelines, or other applicable terms available either on ti.com or provided in conjunction with such TI products. TI’s provision of these resources does not expand or otherwise alter TI’s applicable warranties or warranty disclaimers for TI products. Unless TI explicitly designates a product as custom or customer-specified, TI products are standard, catalog, general purpose devices.

TI objects to and rejects any additional or different terms you may propose.

Copyright © 2026, Texas Instruments Incorporated

Last updated 10/2025