SN54ALS257A, SN54ALS258A, SN74ALS257A, SN74ALS258A, SN74AS257, SN74AS258
QUADRUPLE 2-LINE TO 1-LINE DATA SELECTORS/MULTIPLEXERS WITH 3-STATE OUTPUTS

SDAS124C − APRIL 1982 − REVISED AUGUST 1996

- **3-State Outputs Interface Directly With System Bus**
- **Provide Bus Interface From Multiple Sources in High-Performance Systems**
- **Package Options Include Plastic Small-Outline (D) Packages, Ceramic Chip Carriers (FK), and Standard Plastic (N) and Ceramic (J) 300-mil DIPs**

description

These data selectors/multiplexers are designed to multiplex signals from 4-bit data sources to 4-output data lines in bus-organized systems. The 3-state outputs do not load the data lines when the output-enable ($\overline{OE}$) input is at a high logic level.

The SN54ALS257A and SN54ALS258A are characterized for operation over the full military temperature range of −55°C to 125°C. The SN74ALS257A, SN74ALS258A, SN74AS257, and SN74AS258 are characterized for operation from 0°C to 70°C.

SN54ALS257A, SN54ALS258A . . . J PACKAGE
SN74ALS257A, SN74ALS258A, SN74AS257,
SN74AS258 . . . D OR N PACKAGE
(TOP VIEW)

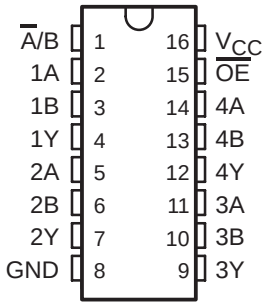

SN54ALS257A, SN54ALS258A . . . FK PACKAGE
(TOP VIEW)

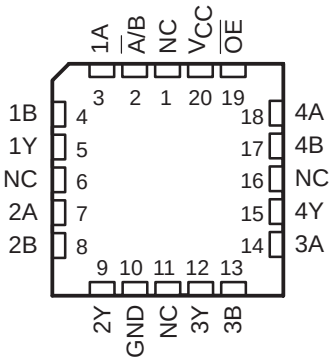

NC − No internal connection

FUNCTION TABLE

INPUTS				OUTPUT Y	
$\overline{OE}$	$\overline{A}$/B	DATA A	DATA B	SN54ALS257A SN74ALS257A SN74AS257	SN54ALS258A SN74ALS258A SN74AS258
H	X	X	X	Z	Z
L	L	L	X	L	H
L	L	H	X	H	L
L	H	X	L	L	H
L	H	X	H	H	L

Please be aware that an important notice concerning availability, standard warranty, and use in critical applications of Texas Instruments semiconductor products and disclaimers thereto appears at the end of this data sheet.

PRODUCTION DATA information is current as of publication date. Products conform to specifications per the terms of Texas Instruments standard warranty. Production processing does not necessarily include testing of all parameters.

Copyright © 1996, Texas Instruments Incorporated

TEXAS INSTRUMENTS
POST OFFICE BOX 655303 • DALLAS, TEXAS 75265
POST OFFICE BOX 1443 • HOUSTON, TEXAS 77251−1443

logic symbols†

SN54ALS257A, SN74ALS257A, SN74AS257

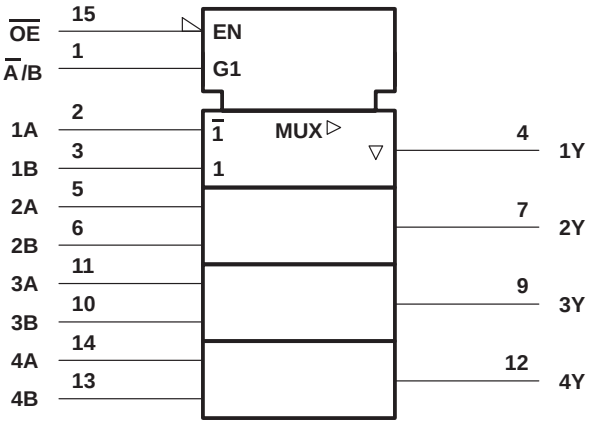

SN54ALS258A, SN74ALS258A, SN74AS258

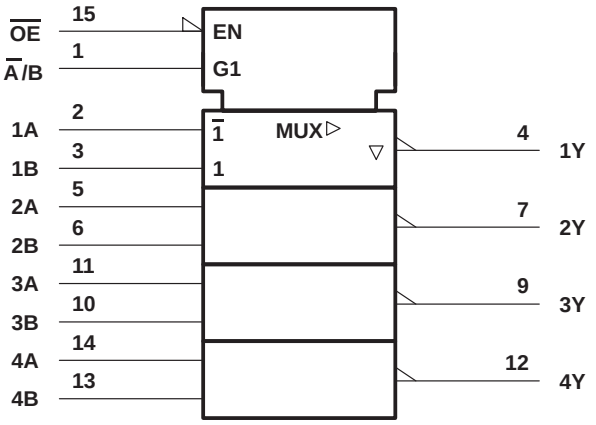

† These symbols are in accordance with ANSI/IEEE Std 91-1984 and IEC Publication 617-12.
Pin numbers shown are for the D, J, and N packages.

logic diagrams (positive logic)

SN54ALS257A, SN74ALS257A, SN74AS257

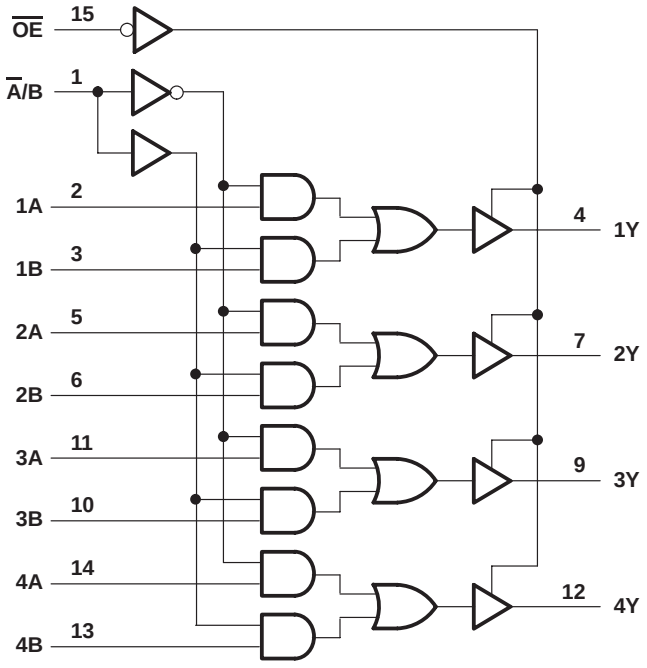

SN54ALS258A, SN74ALS258A, SN74AS258

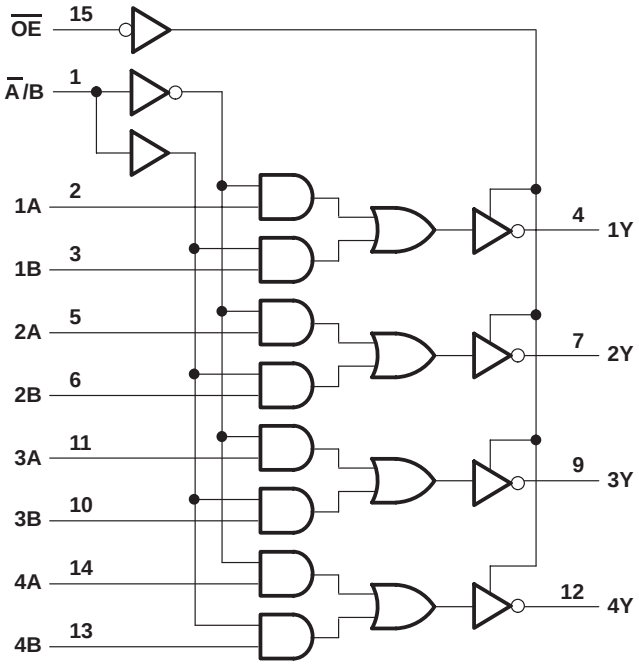

Pin numbers shown are for the D, J, and N packages.

absolute maximum ratings over operating free-air temperature range (unless otherwise noted)†

Supply voltage, V_{CC} . . . . . 7 V
Input voltage, V_I . . . . . 7 V
Voltage applied to a disabled 3-state output . . . . . 5.5 V
Maximum power dissipation at T_A = 55°C (in still air) (see Note 1): D package . . . . . 1.3 W
N package . . . . . 1.1 W
Operating free-air temperature range, T_A: SN54ALS257A, SN54ALS258A . . . . . −55°C to 125°C
SN74ALS257A, SN74ALS258A . . . . . 0°C to 70°C
Storage temperature range, T_{stg} . . . . . −65°C to 150°C

† Stresses beyond those listed under “absolute maximum ratings” may cause permanent damage to the device. These are stress ratings only, and functional operation of the device at these or any other conditions beyond those indicated under “recommended operating conditions” is not implied. Exposure to absolute-maximum-rated conditions for extended periods may affect device reliability.

NOTE 1: The maximum package power dissipation is calculated using a junction temperature of 150°C and a board trace length of 750 mils, except for the N package, which has a trace length of zero.

recommended operating conditions

		SN54ALS257A SN54ALS258A			SN74ALS257A SN74ALS258A			UNIT
		MIN	NOM	MAX	MIN	NOM	MAX	
V_{CC}	Supply voltage	4.5	5	5.5	4.5	5	5.5	V
V_{IH}	High-level input voltage	2			2			V
V_{IL}	Low-level input voltage			0.7			0.8	V
I_{OH}	High-level output current			−1			−2.6	mA
I_{OL}	Low-level output current			12			24	mA
T_A	Operating free-air temperature	−55		125	0		70	°C

electrical characteristics over recommended operating free-air temperature range (unless otherwise noted)

PARAMETER		TEST CONDITIONS		SN54ALS257A SN54ALS258A			SN74ALS257A SN74ALS258A			UNIT
				MIN	TYP†	MAX	MIN	TYP†	MAX	
V_{IK}		V_{CC} = 4.5 V,	I_I = −18 mA			−1.5			−1.5	V
V_{OH}		V_{CC} = 4.5 V to 5.5 V,	I_{OH} = −0.4 mA	V_{CC}−2			V_{CC}−2			V
		V_{CC} = 4.5 V	I_{OH} = −1 mA	2.4	3.3					
			I_{OH} = −2.6 mA				2.4	3.2		
V_{OH}		V_{CC} = 4.5 V	I_{OL} = 12 mA		0.25	0.4		0.25	0.4	V
			I_{OL} = 24 mA					0.35	0.5	
I_{OZH}		V_{CC} = 5.5 V,	V_O = 2.7 V			20			20	µA
I_{OZL}		V_{CC} = 5.5 V,	V_O = 0.4 V			−20			−20	µA
I_I		V_{CC} = 5.5 V,	V_I = 7 V			0.1			0.1	mA
I_{IH}		V_{CC} = 5.5 V,	V_I = 2.7 V			20			20	µA
I_{IL}		V_{CC} = 5.5 V,	V_I = 0.4 V			−0.1			−0.1	mA
I_O‡		V_{CC} = 5.5 V,	V_O = 2.25 V	−20		−112	−30		−112	mA
I_{CC}	SN54ALS257A, SN74ALS257A	V_{CC} = 5.5 V	Outputs high		3	8		3	6	mA
			Outputs low		8	12		8	12	
			Outputs disabled		9	14		9	14	
	SN54ALS258A, SN74ALS258A	V_{CC} = 5.5 V	Outputs high		2.5	5		2.5	4	
			Outputs low		7	11		7	11	
			Outputs disabled		8	13		8	13	

† All typical values are at V_{CC} = 5 V, T_A = 25°C.
‡ The output conditions have been chosen to produce a current that closely approximates one half of the true short-circuit output current, I_{OS}.

switching characteristics (see Figure 1)

PARAMETER	FROM (INPUT)	TO (OUTPUT)	V_{CC} = 4.5 V to 5.5 V, C_L = 50 pF, R1 = 500 Ω, R2 = 500 Ω, T_A = MIN to MAX§				UNIT
			SN54ALS257A		SN74ALS257A		
			MIN	MAX	MIN	MAX	
t_{PLH}	A or B	Any Y	2	12	2	10	ns
t_{PHL}			2	14	2	12	
t_{PLH}	$\overline{A}$/B	Any Y	4	21	6	18	ns
t_{PHL}			6	25	6	22	
t_{PZH}	$\overline{OE}$	Any Y	3	20	4	16	ns
t_{PZL}			4	22	5	18	
t_{PHZ}	$\overline{OE}$	Any Y	2	12	2	10	ns
t_{PLZ}			2	35	4	15	

§ For conditions shown MIN or MAX, use the appropriate value specified under recommended operating conditions.

switching characteristics (see Figure 1)

PARAMETER	FROM (INPUT)	TO (OUTPUT)	V_{CC} = 4.5 V to 5.5 V, C_L = 50 pF, R1 = 500 Ω, R2 = 500 Ω, T_A = MIN to MAX†				UNIT
			SN54ALS258A		SN74ALS258A		
			MIN	MAX	MIN	MAX	
t_{PLH}	A or B	Any Y	1	12	2	8	ns
t_{PHL}			2	9	2	7	
t_{PLH}	$\overline{A}$/B	Any Y	4	28	5	25	ns
t_{PHL}			5	25	6	20	
t_{PZH}	$\overline{OE}$	Any Y	3	20	4	18	ns
t_{PZL}			5	21	5	18	
t_{PHZ}	$\overline{OE}$	Any Y	2	12	2	10	ns
t_{PLZ}			3	37	4	18	

† For conditions shown MIN or MAX, use the appropriate value specified under recommended operating conditions.

absolute maximum ratings over operating free-air temperature range (unless otherwise noted)‡

Supply voltage, V_{CC} . . . . . 7 V
Input voltage, V_I . . . . . 7 V
Voltage applied to a disabled 3-state output . . . . . 5.5 V
Maximum power dissipation at T_A = 55°C (in still air) (see Note 1): D package . . . . . 1.3 W
N package . . . . . 1.1 W
Operating free-air temperature range, T_A: SN74AS257, SN74AS258 . . . . . 0°C to 70°C
Storage temperature range, T_{stg} . . . . . −65°C to 150°C

‡ Stresses beyond those listed under “absolute maximum ratings” may cause permanent damage to the device. These are stress ratings only, and functional operation of the device at these or any other conditions beyond those indicated under “recommended operating conditions” is not implied. Exposure to absolute-maximum-rated conditions for extended periods may affect device reliability.

NOTE 1: The maximum package power dissipation is calculated using a junction temperature of 150°C and a board trace length of 750 mils, except for the N package, which has a trace length of zero.

recommended operating conditions

		SN74AS257 SN74AS258			UNIT
		MIN	NOM	MAX	
V_{CC}	Supply voltage	4.5	5	5.5	V
V_{IH}	High-level input voltage	2			V
V_{IL}	Low-level input voltage			0.8	V
I_{OH}	High-level output current			−15	mA
I_{OL}	Low-level output current			48	mA
T_A	Operating free-air temperature	0		70	°C

electrical characteristics over recommended operating free-air temperature range (unless otherwise noted)

PARAMETER		TEST CONDITIONS		SN74AS257 SN74AS258			UNIT
				MIN	TYP†	MAX	
V_{IK}		V_{CC} = 4.5 V,	I_I = −18 mA			−1.2	V
V_{OH}		V_{CC} = 4.5 V to 5.5 V,	I_{OH} = −2 mA	V_{CC} −2			V
		V_{CC} = 4.5 V,	I_{OH} = −15 mA	2.4	3.2		
V_{OL}		V_{CC} = 4.5 V,	I_{OL} = 48 mA		0.35	0.5	V
I_{OZH}		V_{CC} = 5.5 V,	V_O = 2.7 V			50	µA
I_{OZL}		V_{CC} = 5.5 V,	V_O = 0.4 V			−50	µA
I_I	A, B, or $\overline{OE}$	V_{CC} = 5.5 V,	V_I = 7 V			0.1	mA
	$\overline{A}$/B					0.2	
I_{IH}	A, B, or $\overline{OE}$	V_{CC} = 5.5 V,	V_I = 2.7 V			20	µA
	$\overline{A}$/B					40	
I_{IL}	A, B, or $\overline{OE}$	V_{CC} = 5.5 V,	V_I = 0.4 V			−0.5	mA
	$\overline{A}$/B					−1	
I_O‡		V_{CC} = 5.5 V,	V_O = 2.25 V	−30		−112	mA
I_{CC}	SN74AS257	V_{CC} = 5.5 V	Outputs high		12.1	19.7	mA
			Outputs low		19	30.6	
			Outputs disabled		19.7	31.9	
	SN74AS258	V_{CC} = 5.5 V	Outputs high		8.4	13.5	
			Outputs low		15.2	24.6	
			Outputs disabled		15.5	25.2	

† All typical values are at V_{CC} = 5 V, T_A = 25°C.
‡ The output conditions have been chosen to produce a current that closely approximates one half of the true short-circuit output current, I_{OS}.

switching characteristics (see Figure 1)

PARAMETER	FROM (INPUT)	TO (OUTPUT)	V_{CC} = 4.5 V to 5.5 V, C_L = 50 pF, R1 = 500 Ω, R2 = 500 Ω, T_A = MIN to MAX†		UNIT
			SN74AS257		
			MIN	MAX	
t_{PLH}	A or B	Any Y	1	5.5	ns
t_{PHL}			1	6	
t_{PLH}	$\overline{A}$/B	Any Y	2	11	ns
t_{PHL}			2	10	
t_{PZH}	$\overline{OE}$	Any Y	2	7.5	ns
t_{PZL}			2	9.5	
t_{PHZ}	$\overline{OE}$	Any Y	1.5	6.5	ns
t_{PLZ}			2	7	

switching characteristics (see Figure 1)

PARAMETER	FROM (INPUT)	TO (OUTPUT)	V_{CC} = 4.5 V to 5.5 V, C_L = 50 pF, R1 = 500 Ω, R2 = 500 Ω, T_A = MIN to MAX†		UNIT
			SN74AS258		
			MIN	MAX	
t_{PLH}	A or B	Any Y	1	5	ns
t_{PHL}			1	4	
t_{PLH}	$\overline{A}$/B	Any Y	2	9.5	ns
t_{PHL}			2	10	
t_{PZH}	$\overline{OE}$	Any Y	2	8	ns
t_{PZL}			2	10	
t_{PHZ}	$\overline{OE}$	Any Y	1.5	6	ns
t_{PLZ}			2	6.5	

† For conditions shown MIN or MAX, use the appropriate value specified under recommended operating conditions.

PARAMETER MEASUREMENT INFORMATION
SERIES 54ALS/74ALS AND 54AS/74AS DEVICES

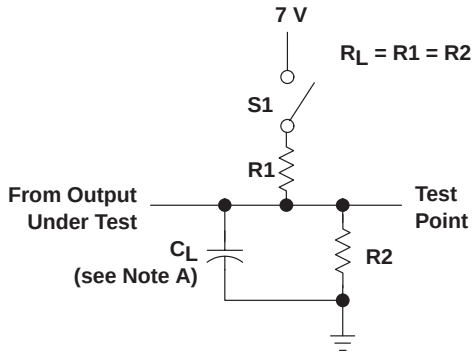

LOAD CIRCUIT
FOR 3-STATE OUTPUTS

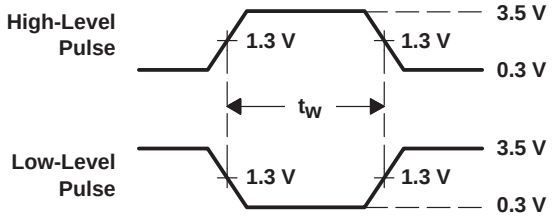

VOLTAGE WAVEFORMS
PULSE DURATIONS

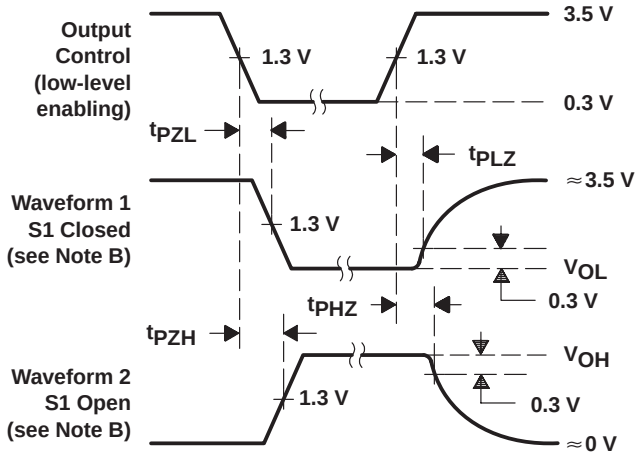

VOLTAGE WAVEFORMS
ENABLE AND DISABLE TIMES, 3-STATE OUTPUTS

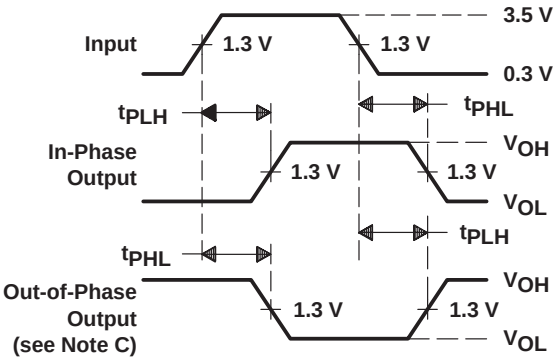

VOLTAGE WAVEFORMS
PROPAGATION DELAY TIMES

NOTES: A. C_L includes probe and jig capacitance.
B. Waveform 1 is for an output with internal conditions such that the output is low except when disabled by the output control. Waveform 2 is for an output with internal conditions such that the output is high except when disabled by the output control.
C. When measuring propagation delay items of 3-state outputs, switch S1 is open.
D. All input pulses have the following characteristics: PRR ≤ 1 MHz, $t_r = t_f$ = 2 ns, duty cycle = 50%.
E. The outputs are measured one at a time with one transition per measurement.

Figure 1. Load Circuits and Voltage Waveforms

PACKAGING INFORMATION

Orderable part number	Status (1)	Material type (2)	Package | Pins	Package qty | Carrier	RoHS (3)	Lead finish/ Ball material (4)	MSL rating/ Peak reflow (5)	Op temp (°C)	Part marking (6)
5962-8862601EA	Active	Production	CDIP (J) | 16	25 | TUBE	No	SNPB	N/A for Pkg Type	-55 to 125	5962-8862601EA SNJ54ALS258AJ
85097012A	Active	Production	LCCC (FK) | 20	55 | TUBE	No	SNPB	N/A for Pkg Type	-55 to 125	85097012A SNJ54ALS 257AFK
8509701EA	Active	Production	CDIP (J) | 16	25 | TUBE	No	SNPB	N/A for Pkg Type	-55 to 125	8509701EA SNJ54ALS257AJ
SN74ALS257AD	Obsolete	Production	SOIC (D) | 16	-	-	Call TI	Call TI	0 to 70	ALS257A
SN74ALS257ADR	Active	Production	SOIC (D) | 16	2500 | LARGE T&R	Yes	NIPDAU	Level-1-260C-UNLIM	0 to 70	ALS257A
SN74ALS257ADR.A	Active	Production	SOIC (D) | 16	2500 | LARGE T&R	Yes	NIPDAU	Level-1-260C-UNLIM	0 to 70	ALS257A
SN74ALS257AN	Active	Production	PDIP (N) | 16	25 | TUBE	Yes	NIPDAU	N/A for Pkg Type	0 to 70	SN74ALS257AN
SN74ALS257AN.A	Active	Production	PDIP (N) | 16	25 | TUBE	Yes	NIPDAU	N/A for Pkg Type	0 to 70	SN74ALS257AN
SN74ALS257ANSR	Active	Production	SOP (NS) | 16	2000 | LARGE T&R	Yes	NIPDAU	Level-1-260C-UNLIM	0 to 70	ALS257A
SN74ALS257ANSR.A	Active	Production	SOP (NS) | 16	2000 | LARGE T&R	Yes	NIPDAU	Level-1-260C-UNLIM	0 to 70	ALS257A
SN74ALS258AN	Active	Production	PDIP (N) | 16	25 | TUBE	Yes	NIPDAU	N/A for Pkg Type	0 to 70	SN74ALS258AN
SN74ALS258AN.A	Active	Production	PDIP (N) | 16	25 | TUBE	Yes	NIPDAU	N/A for Pkg Type	0 to 70	SN74ALS258AN
SN74AS257D	Active	Production	SOIC (D) | 16	40 | TUBE	Yes	NIPDAU	Level-1-260C-UNLIM	0 to 70	AS257
SN74AS257D.A	Active	Production	SOIC (D) | 16	40 | TUBE	Yes	NIPDAU	Level-1-260C-UNLIM	0 to 70	AS257
SN74AS257N	Active	Production	PDIP (N) | 16	25 | TUBE	Yes	NIPDAU	N/A for Pkg Type	0 to 70	SN74AS257N
SN74AS257N.A	Active	Production	PDIP (N) | 16	25 | TUBE	Yes	NIPDAU	N/A for Pkg Type	0 to 70	SN74AS257N
SN74AS257NSR	Active	Production	SOP (NS) | 16	2000 | LARGE T&R	Yes	NIPDAU	Level-1-260C-UNLIM	0 to 70	74AS257
SN74AS257NSR.A	Active	Production	SOP (NS) | 16	2000 | LARGE T&R	Yes	NIPDAU	Level-1-260C-UNLIM	0 to 70	74AS257
SN74AS258N	Active	Production	PDIP (N) | 16	25 | TUBE	Yes	NIPDAU	N/A for Pkg Type	0 to 70	SN74AS258N
SN74AS258N.A	Active	Production	PDIP (N) | 16	25 | TUBE	Yes	NIPDAU	N/A for Pkg Type	0 to 70	SN74AS258N
SNJ54ALS257AFK	Active	Production	LCCC (FK) | 20	55 | TUBE	No	SNPB	N/A for Pkg Type	-55 to 125	85097012A SNJ54ALS 257AFK
SNJ54ALS257AFK.A	Active	Production	LCCC (FK) | 20	55 | TUBE	No	SNPB	N/A for Pkg Type	-55 to 125	85097012A SNJ54ALS 257AFK

Orderable part number	Status (1)	Material type (2)	Package | Pins	Package qty | Carrier	RoHS (3)	Lead finish/ Ball material (4)	MSL rating/ Peak reflow (5)	Op temp (°C)	Part marking (6)
SNJ54ALS257AJ	Active	Production	CDIP (J) | 16	25 | TUBE	No	SNPB	N/A for Pkg Type	-55 to 125	8509701EA SNJ54ALS257AJ
SNJ54ALS257AJ.A	Active	Production	CDIP (J) | 16	25 | TUBE	No	SNPB	N/A for Pkg Type	-55 to 125	8509701EA SNJ54ALS257AJ
SNJ54ALS258AJ	Active	Production	CDIP (J) | 16	25 | TUBE	No	SNPB	N/A for Pkg Type	-55 to 125	5962-8862601EA SNJ54ALS258AJ
SNJ54ALS258AJ.A	Active	Production	CDIP (J) | 16	25 | TUBE	No	SNPB	N/A for Pkg Type	-55 to 125	5962-8862601EA SNJ54ALS258AJ

(1) **Status:** For more details on status, see our product life cycle.

(2) **Material type:** When designated, preproduction parts are prototypes/experimental devices, and are not yet approved or released for full production. Testing and final process, including without limitation quality assurance, reliability performance testing, and/or process qualification, may not yet be complete, and this item is subject to further changes or possible discontinuation. If available for ordering, purchases will be subject to an additional waiver at checkout, and are intended for early internal evaluation purposes only. These items are sold without warranties of any kind.

(3) **RoHS values:** Yes, No, RoHS Exempt. See the TI RoHS Statement for additional information and value definition.

(4) **Lead finish/Ball material:** Parts may have multiple material finish options. Finish options are separated by a vertical ruled line. Lead finish/Ball material values may wrap to two lines if the finish value exceeds the maximum column width.

(5) **MSL rating/Peak reflow:** The moisture sensitivity level ratings and peak solder (reflow) temperatures. In the event that a part has multiple moisture sensitivity ratings, only the lowest level per JEDEC standards is shown. Refer to the shipping label for the actual reflow temperature that will be used to mount the part to the printed circuit board.

(6) **Part marking:** There may be an additional marking, which relates to the logo, the lot trace code information, or the environmental category of the part.

Multiple part markings will be inside parentheses. Only one part marking contained in parentheses and separated by a "~" will appear on a part. If a line is indented then it is a continuation of the previous line and the two combined represent the entire part marking for that device.

Important Information and Disclaimer: The information provided on this page represents TI's knowledge and belief as of the date that it is provided. TI bases its knowledge and belief on information provided by third parties, and makes no representation or warranty as to the accuracy of such information. Efforts are underway to better integrate information from third parties. TI has taken and continues to take reasonable steps to provide representative and accurate information but may not have conducted destructive testing or chemical analysis on incoming materials and chemicals. TI and TI suppliers consider certain information to be proprietary, and thus CAS numbers and other limited information may not be available for release.

In no event shall TI's liability arising out of such information exceed the total purchase price of the TI part(s) at issue in this document sold by TI to Customer on an annual basis.

OTHER QUALIFIED VERSIONS OF SN54ALS257A, SN54ALS258A, SN74ALS257A, SN74ALS258A :

- Catalog : SN74ALS257A, SN74ALS258A
- Military : SN54ALS257A, SN54ALS258A

NOTE: Qualified Version Definitions:

- Catalog - TI's standard catalog product
- Military - QML certified for Military and Defense Applications

TAPE AND REEL INFORMATION

REEL DIMENSIONS

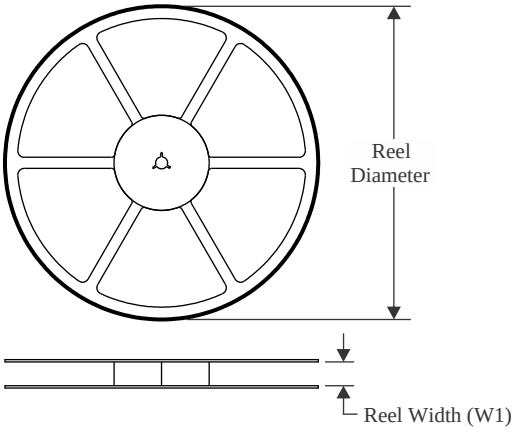

TAPE DIMENSIONS

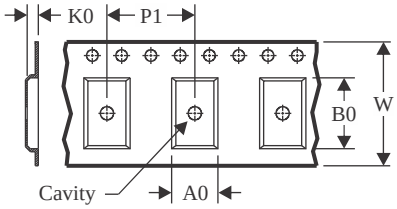

A0	Dimension designed to accommodate the component width
B0	Dimension designed to accommodate the component length
K0	Dimension designed to accommodate the component thickness
W	Overall width of the carrier tape
P1	Pitch between successive cavity centers

QUADRANT ASSIGNMENTS FOR PIN 1 ORIENTATION IN TAPE

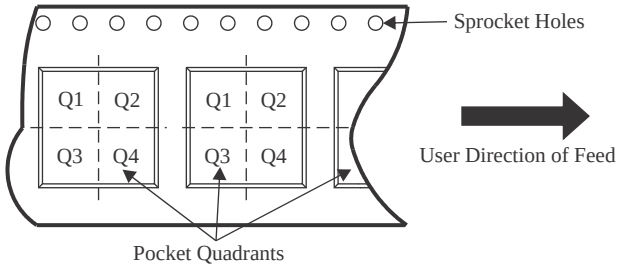

*All dimensions are nominal

Device	Package Type	Package Drawing	Pins	SPQ	Reel Diameter (mm)	Reel Width W1 (mm)	A0 (mm)	B0 (mm)	K0 (mm)	P1 (mm)	W (mm)	Pin1 Quadrant
SN74ALS257ADR	SOIC	D	16	2500	330.0	16.4	6.5	10.3	2.1	8.0	16.0	Q1
SN74ALS257ANSR	SOP	NS	16	2000	330.0	16.4	8.1	10.4	2.5	12.0	16.0	Q1
SN74AS257NSR	SOP	NS	16	2000	330.0	16.4	8.1	10.4	2.5	12.0	16.0	Q1

TAPE AND REEL BOX DIMENSIONS

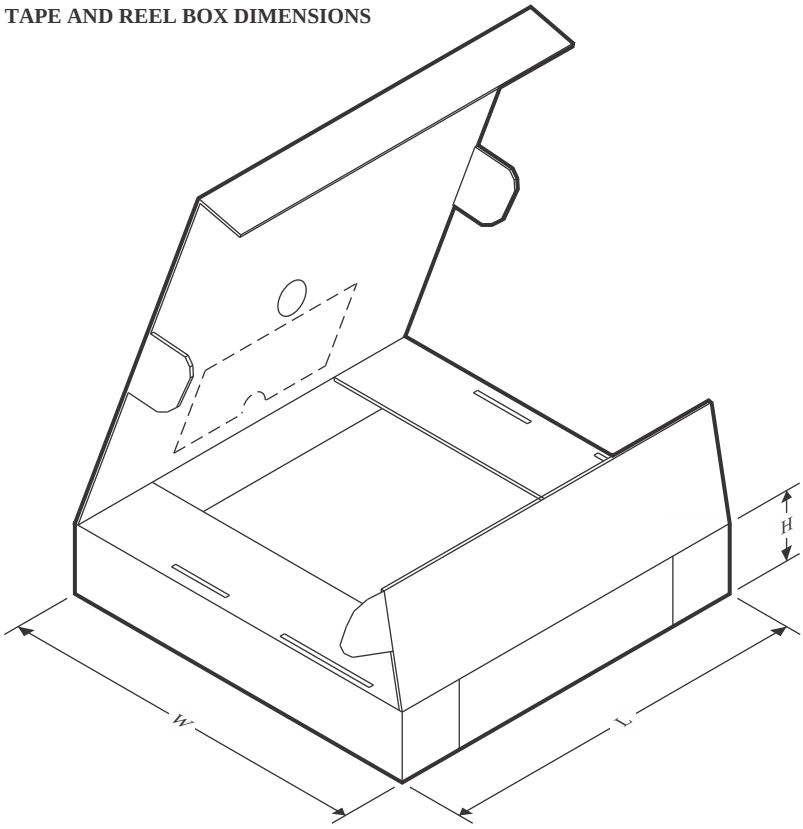

*All dimensions are nominal

Device	Package Type	Package Drawing	Pins	SPQ	Length (mm)	Width (mm)	Height (mm)
SN74ALS257ADR	SOIC	D	16	2500	340.5	336.1	32.0
SN74ALS257ANSR	SOP	NS	16	2000	353.0	353.0	32.0
SN74AS257NSR	SOP	NS	16	2000	353.0	353.0	32.0

TUBE

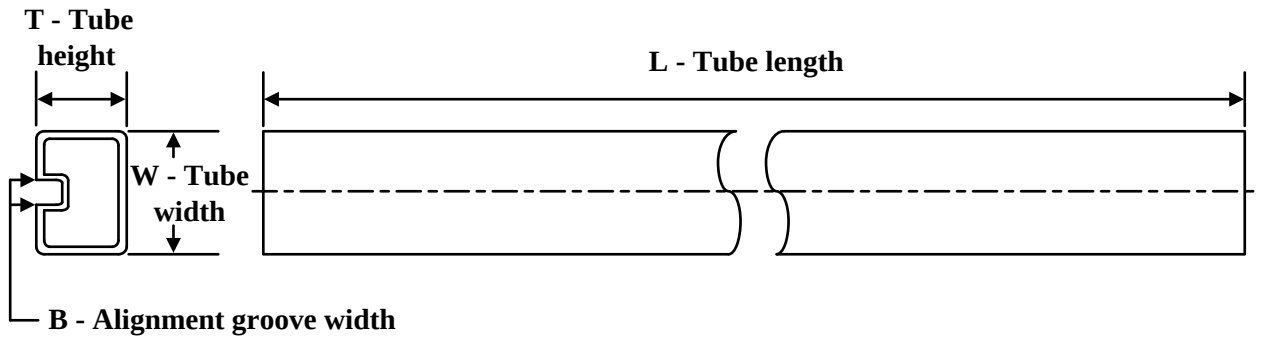

*All dimensions are nominal

Device	Package Name	Package Type	Pins	SPQ	L (mm)	W (mm)	T (µm)	B (mm)
85097012A	FK	LCCC	20	55	506.98	12.06	2030	NA
SN74ALS257AN	N	PDIP	16	25	506	13.97	11230	4.32
SN74ALS257AN	N	PDIP	16	25	506	13.97	11230	4.32
SN74ALS257AN.A	N	PDIP	16	25	506	13.97	11230	4.32
SN74ALS257AN.A	N	PDIP	16	25	506	13.97	11230	4.32
SN74ALS258AN	N	PDIP	16	25	506	13.97	11230	4.32
SN74ALS258AN	N	PDIP	16	25	506	13.97	11230	4.32
SN74ALS258AN.A	N	PDIP	16	25	506	13.97	11230	4.32
SN74ALS258AN.A	N	PDIP	16	25	506	13.97	11230	4.32
SN74AS257D	D	SOIC	16	40	507	8	3940	4.32
SN74AS257D.A	D	SOIC	16	40	507	8	3940	4.32
SN74AS257N	N	PDIP	16	25	506	13.97	11230	4.32
SN74AS257N	N	PDIP	16	25	506	13.97	11230	4.32
SN74AS257N.A	N	PDIP	16	25	506	13.97	11230	4.32
SN74AS257N.A	N	PDIP	16	25	506	13.97	11230	4.32
SN74AS258N	N	PDIP	16	25	506	13.97	11230	4.32
SN74AS258N	N	PDIP	16	25	506	13.97	11230	4.32
SN74AS258N.A	N	PDIP	16	25	506	13.97	11230	4.32
SN74AS258N.A	N	PDIP	16	25	506	13.97	11230	4.32
SNJ54ALS257AFK	FK	LCCC	20	55	506.98	12.06	2030	NA
SNJ54ALS257AFK.A	FK	LCCC	20	55	506.98	12.06	2030	NA

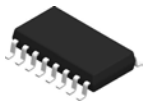

PACKAGE OUTLINE

NS0016A

SOP - 2.00 mm max height

SOP

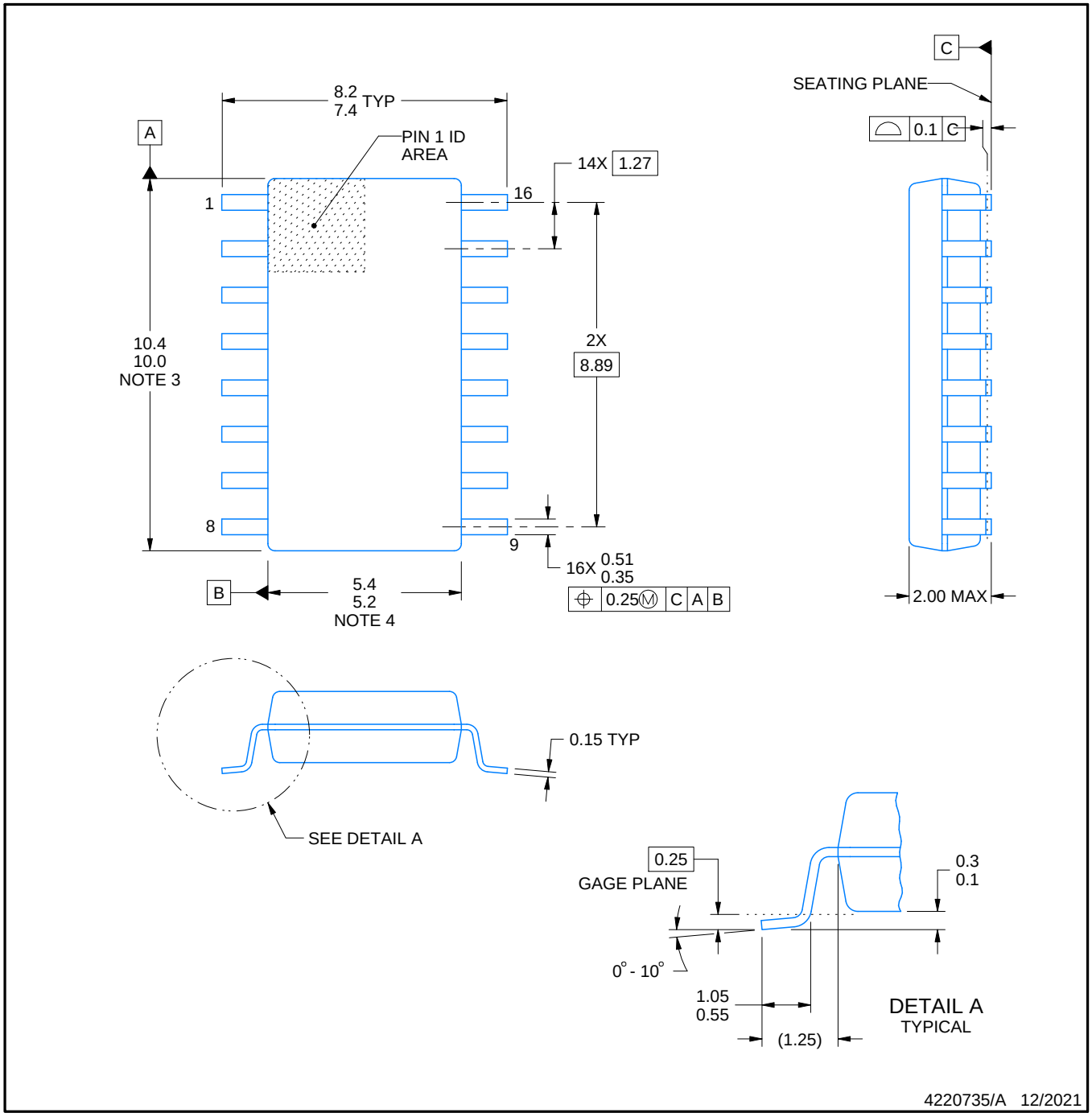

NOTES:

1. All linear dimensions are in millimeters. Dimensions in parenthesis are for reference only. Dimensioning and tolerancing per ASME Y14.5M.
2. This drawing is subject to change without notice.
3. This dimension does not include mold flash, protrusions, or gate burrs. Mold flash, protrusions, or gate burrs shall not exceed 0.15 mm, per side.
4. This dimension does not include interlead flash. Interlead flash shall not exceed 0.25 mm, per side.

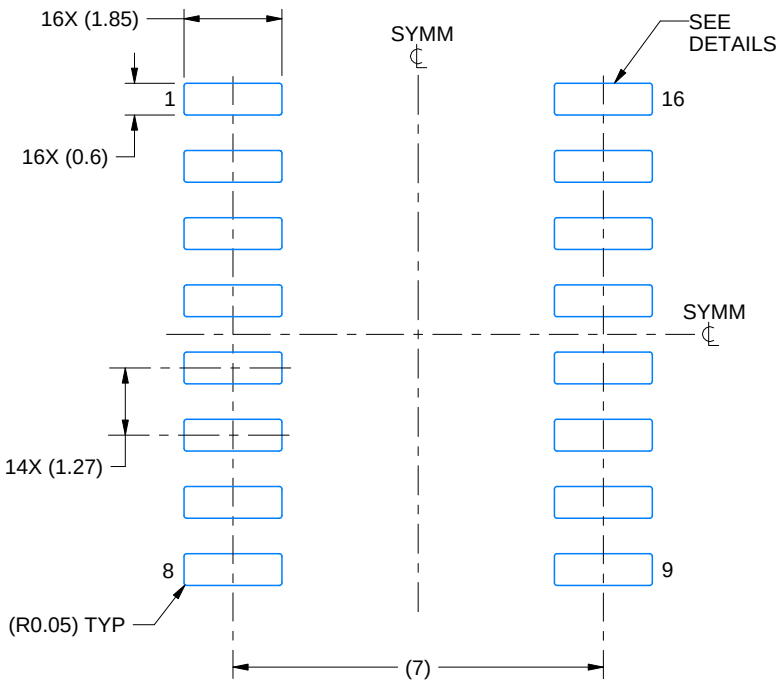

LAND PATTERN EXAMPLE
SCALE:7X

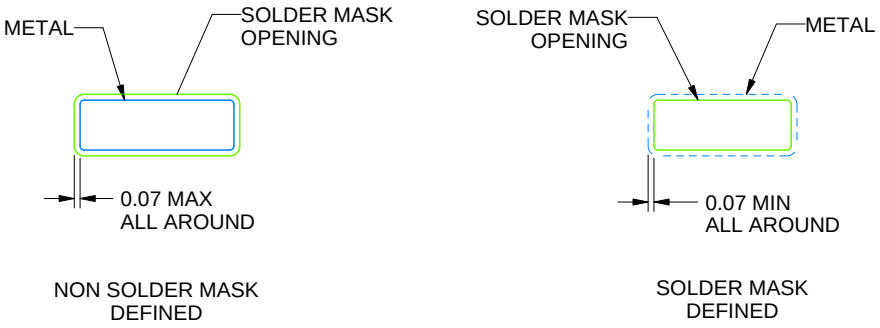

NON SOLDER MASK
DEFINED

SOLDER MASK
DEFINED

SOLDER MASK DETAILS

4220735/A 12/2021

NOTES: (continued)

5. Publication IPC-7351 may have alternate designs.
6. Solder mask tolerances between and around signal pads can vary based on board fabrication site.

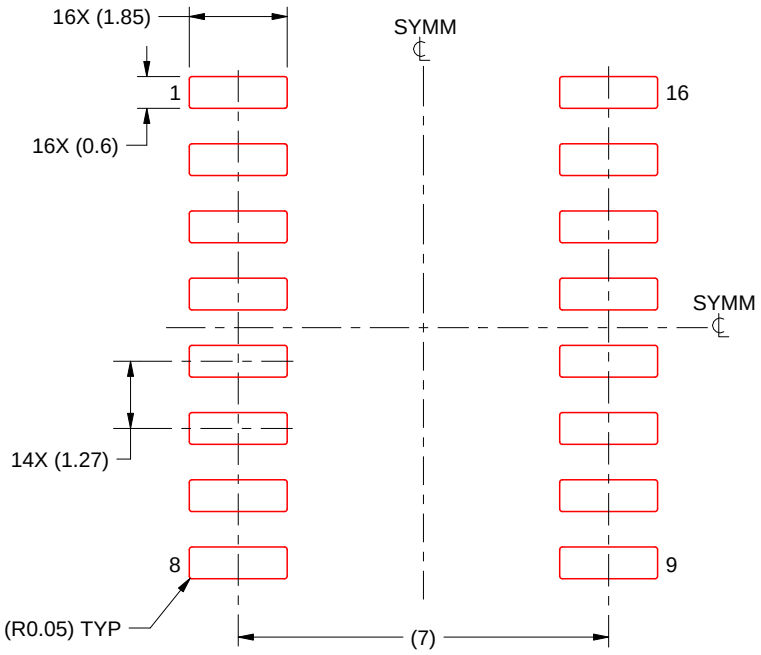

SOLDER PASTE EXAMPLE
BASED ON 0.125 mm THICK STENCIL
SCALE:7X

4220735/A 12/2021

NOTES: (continued)

7. Laser cutting apertures with trapezoidal walls and rounded corners may offer better paste release. IPC-7525 may have alternate design recommendations.
8. Board assembly site may have different recommendations for stencil design.

D (R–PDSO–G16) PLASTIC SMALL OUTLINE

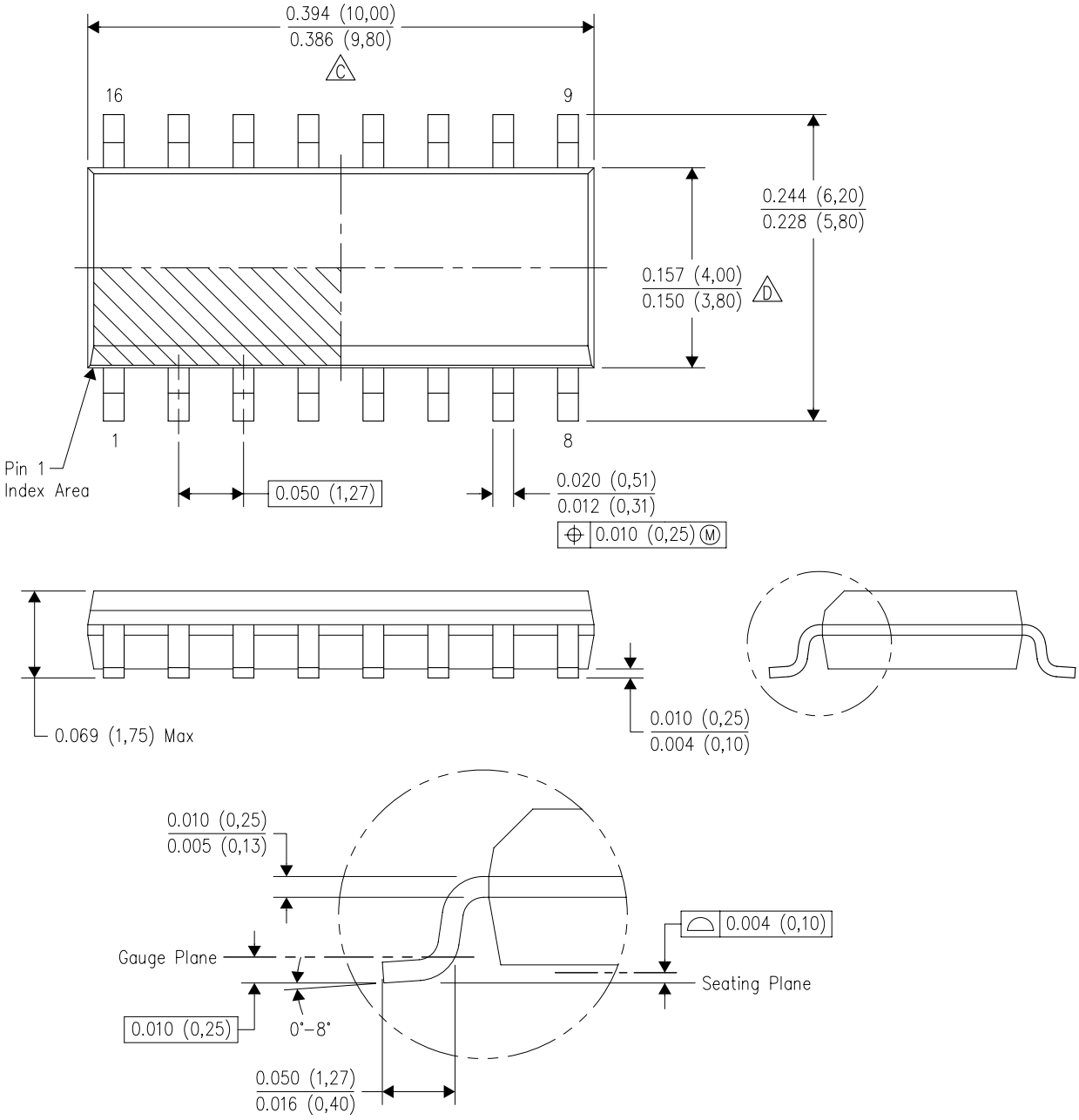

NOTES:
A. All linear dimensions are in inches (millimeters).
B. This drawing is subject to change without notice.
C. Body length does not include mold flash, protrusions, or gate burrs. Mold flash, protrusions, or gate burrs shall not exceed 0.006 (0,15) each side.
D. Body width does not include interlead flash. Interlead flash shall not exceed 0.017 (0,43) each side.
E. Reference JEDEC MS–012 variation AC.

GENERIC PACKAGE VIEW

FK 20

LCCC - 2.03 mm max height

8.89 x 8.89, 1.27 mm pitch

LEADLESS CERAMIC CHIP CARRIER

This image is a representation of the package family, actual package may vary.
Refer to the product data sheet for package details.

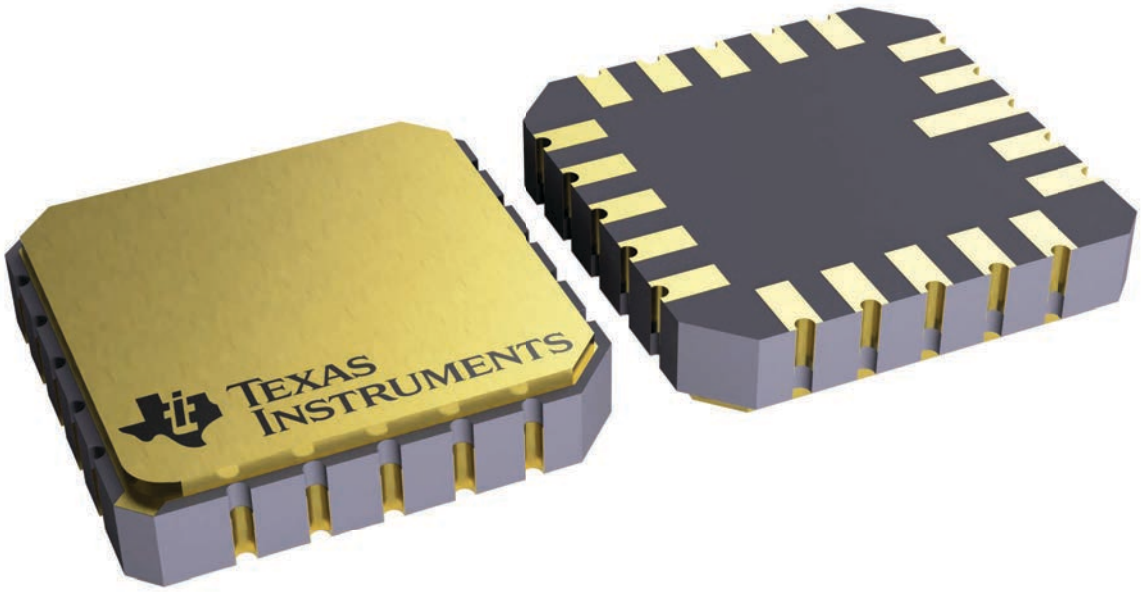

4229370VA\

J (R–GDIP–T**)

14 LEADS SHOWN

CERAMIC DUAL IN–LINE PACKAGE

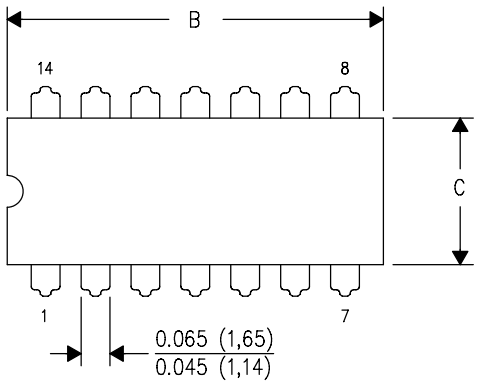

DIM \ PINS **	14	16	18	20
A	0.300 (7,62) BSC	0.300 (7,62) BSC	0.300 (7,62) BSC	0.300 (7,62) BSC
B MAX	0.785 (19,94)	.840 (21,34)	0.960 (24,38)	1.060 (26,92)
B MIN	—	—	—	—
C MAX	0.300 (7,62)	0.300 (7,62)	0.310 (7,87)	0.300 (7,62)
C MIN	0.245 (6,22)	0.245 (6,22)	0.220 (5,59)	0.245 (6,22)

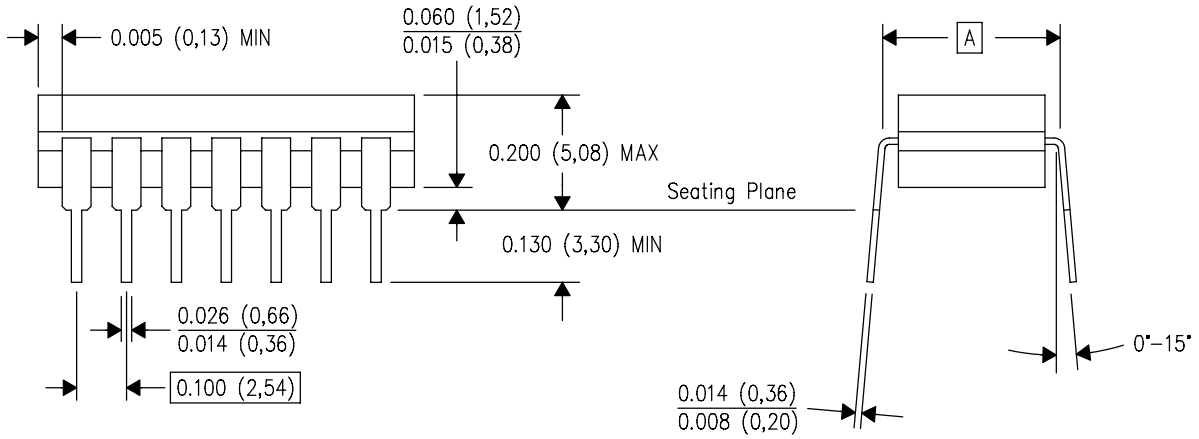

4040083/F 03/03

NOTES:
A. All linear dimensions are in inches (millimeters).
B. This drawing is subject to change without notice.
C. This package is hermetically sealed with a ceramic lid using glass frit.
D. Index point is provided on cap for terminal identification only on press ceramic glass frit seal only.
E. Falls within MIL STD 1835 GDIP1–T14, GDIP1–T16, GDIP1–T18 and GDIP1–T20.

N (R–PDIP–T**)

PLASTIC DUAL–IN–LINE PACKAGE

16 PINS SHOWN

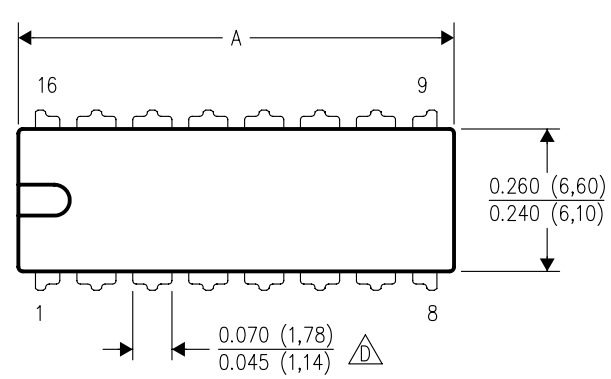

DIM \ PINS **	14	16	18	20
A MAX	0.775 (19,69)	0.775 (19,69)	0.920 (23,37)	1.060 (26,92)
A MIN	0.745 (18,92)	0.745 (18,92)	0.850 (21,59)	0.940 (23,88)
MS–001 VARIATION (C)	AA	BB	AC	AD

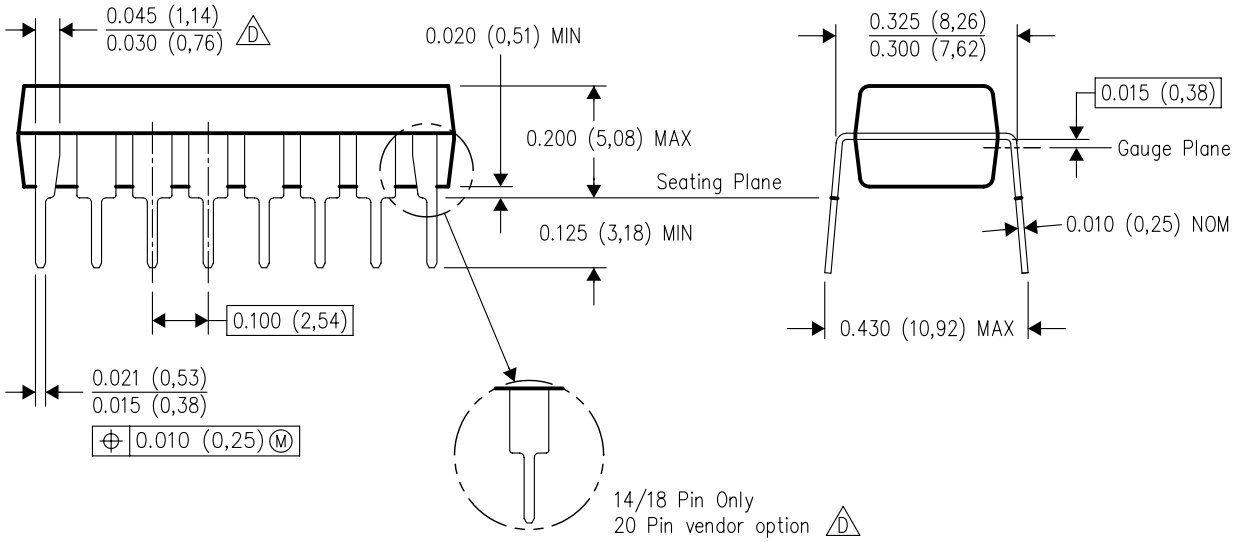

4040049/E 12/2002

NOTES:
A. All linear dimensions are in inches (millimeters).
B. This drawing is subject to change without notice.
C. Falls within JEDEC MS–001, except 18 and 20 pin minimum body length (Dim A).
D. The 20 pin end lead shoulder width is a vendor option, either half or full width.

IMPORTANT NOTICE AND DISCLAIMER

TI PROVIDES TECHNICAL AND RELIABILITY DATA (INCLUDING DATASHEETS), DESIGN RESOURCES (INCLUDING REFERENCE DESIGNS), APPLICATION OR OTHER DESIGN ADVICE, WEB TOOLS, SAFETY INFORMATION, AND OTHER RESOURCES “AS IS” AND WITH ALL FAULTS, AND DISCLAIMS ALL WARRANTIES, EXPRESS AND IMPLIED, INCLUDING WITHOUT LIMITATION ANY IMPLIED WARRANTIES OF MERCHANTABILITY, FITNESS FOR A PARTICULAR PURPOSE OR NON-INFRINGEMENT OF THIRD PARTY INTELLECTUAL PROPERTY RIGHTS.

These resources are intended for skilled developers designing with TI products. You are solely responsible for (1) selecting the appropriate TI products for your application, (2) designing, validating and testing your application, and (3) ensuring your application meets applicable standards, and any other safety, security, regulatory or other requirements.

These resources are subject to change without notice. TI grants you permission to use these resources only for development of an application that uses the TI products described in the resource. Other reproduction and display of these resources is prohibited. No license is granted to any other TI intellectual property right or to any third party intellectual property right. TI disclaims responsibility for, and you fully indemnify TI and its representatives against any claims, damages, costs, losses, and liabilities arising out of your use of these resources.

TI’s products are provided subject to TI’s Terms of Sale, TI’s General Quality Guidelines, or other applicable terms available either on ti.com or provided in conjunction with such TI products. TI’s provision of these resources does not expand or otherwise alter TI’s applicable warranties or warranty disclaimers for TI products. Unless TI explicitly designates a product as custom or customer-specified, TI products are standard, catalog, general purpose devices.

TI objects to and rejects any additional or different terms you may propose.

Copyright © 2026, Texas Instruments Incorporated

Last updated 10/2025