- **Member of Texas Instruments Widebus™ Family**
- **5-Ω Switch Connection Between Two Ports**
- **TTL-Compatible Input Levels**
- **Designed to Be Used in Level-Shifting Applications**

DGG, DGV, OR DL PACKAGE
(TOP VIEW)

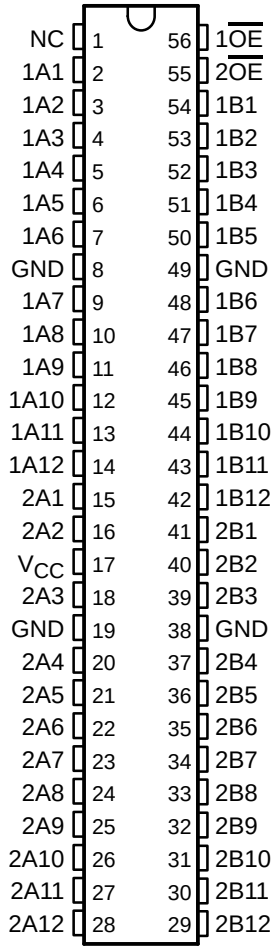

NC – No internal connection

description/ordering information

The SN74CBTD16211 provides 24 bits of high-speed TTL-compatible bus switching. The low on-state resistance of the switch allows connections to be made with minimal propagation delay. A diode to V_{CC} is integrated in the circuit to allow for level shifting from 5-V signals at the device inputs to 3.3-V signals at the device outputs.

The device is organized as a dual 12-bit bus switch with separate output-enable ($\overline{OE}$) inputs. It can be used as two 12-bit bus switches or as one 24-bit bus switch. When $\overline{OE}$ is low, the associated 12-bit bus switch is on, and port A is connected to port B. When $\overline{OE}$ is high, the switch is open, and the high-impedance state exists between the ports.

ORDERING INFORMATION

T_A	PACKAGE†		ORDERABLE PART NUMBER	TOP-SIDE MARKING
–40°C to 85°C	SSOP – DL	Tube	SN74CBTD16211DL	CBTD16211
		Tape and reel	SN74CBTD16211DLR	
	TSSOP – DGG	Tape and reel	SN74CBTD16211DGGR	CBTD16211
	TVSOP – DGV	Tape and reel	SN74CBTD16211DGVR	CYD211

† Package drawings, standard packing quantities, thermal data, symbolization, and PCB design guidelines are available at www.ti.com/sc/package.

Please be aware that an important notice concerning availability, standard warranty, and use in critical applications of Texas Instruments semiconductor products and disclaimers thereto appears at the end of this data sheet.

Widebus is a trademark of Texas Instruments.

PRODUCTION DATA information is current as of publication date. Products conform to specifications per the terms of Texas Instruments standard warranty. Production processing does not necessarily include testing of all parameters.

Copyright © 2002, Texas Instruments Incorporated

FUNCTION TABLE
(each 12-bit bus switch)

INPUT $\overline{OE}$	FUNCTION
L	A port = B port
H	Disconnect

logic diagram (positive logic)

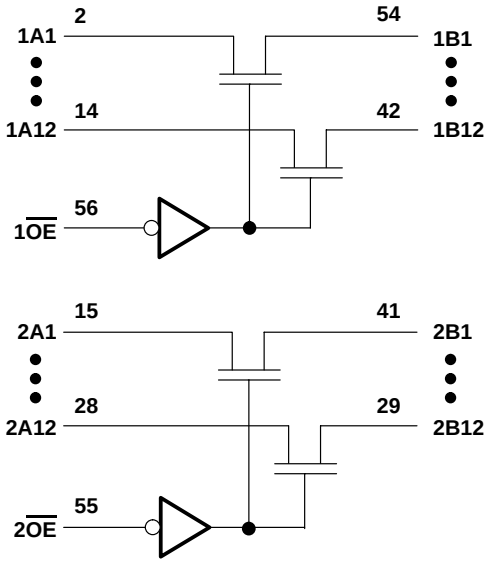

absolute maximum ratings over operating free-air temperature range (unless otherwise noted)†

Supply voltage range, V_{CC} . . . . . –0.5 V to 7 V
Input voltage range, V_I (see Note 1) . . . . . –0.5 V to 7 V
Continuous channel current . . . . . 128 mA
Input clamp current, I_{IK} ($V_I < 0$) . . . . . –50 mA
Package thermal impedance, θ_{JA} (see Note 2): DGG package . . . . . 64°C/W
DGV package . . . . . 48°C/W
DL package . . . . . 56°C/W
Storage temperature range, T_{stg} . . . . . –65°C to 150°C

† Stresses beyond those listed under “absolute maximum ratings” may cause permanent damage to the device. These are stress ratings only, and functional operation of the device at these or any other conditions beyond those indicated under “recommended operating conditions” is not implied. Exposure to absolute-maximum-rated conditions for extended periods may affect device reliability.

NOTES: 1. The input and output negative-voltage ratings may be exceeded if the input and output clamp-current ratings are observed.
2. The package thermal impedance is calculated in accordance with JESD 51-7.

recommended operating conditions (see Note 3)

		MIN	MAX	UNIT
V_{CC}	Supply voltage	4.5	5.5	V
V_{IH}	High-level control input voltage	2		V
V_{IL}	Low-level control input voltage		0.8	V
T_A	Operating free-air temperature	–40	85	°C

In applications with fast edge rates, multiple outputs switching, and operating at high frequencies, the output may have little or no level-shifting effect.

NOTE 3: All unused control inputs of the device must be held at V_{CC} or GND to ensure proper device operation. Refer to the TI application report, *Implications of Slow or Floating CMOS Inputs*, literature number SCBA004.

electrical characteristics over recommended operating free-air temperature range (unless otherwise noted)

PARAMETER		TEST CONDITIONS			MIN	TYP†	MAX	UNIT
V_{IK}		V_{CC} = 4.5 V,	I_I = –18 mA				–1.2	V
V_{OH}		See Figure 2						
I_I		V_{CC} = 5.5 V,	V_I = 5.5 V or GND				±1	µA
I_{CC}		V_{CC} = 5.5 V,	I_O = 0,	V_I = V_{CC} or GND			1.5	mA
ΔI_{CC}‡	Control inputs	V_{CC} = 5.5 V,	One input at 3.4 V,	Other inputs at V_{CC} or GND			2.5	mA
C_i	Control inputs	V_I = 3 V or 0				3		pF
$C_{io(OFF)}$		V_O = 3 V or 0,	$\overline{OE}$ = V_{CC}			5.5		pF
r_{on}§		V_{CC} = 4.5 V	V_I = 0	I_I = 64 mA		5	7	Ω
				I_I = 30 mA		5	7	
			V_I = 2.4 V,	I_I = 15 mA		35	50	

† All typical values are at V_{CC} = 5 V, T_A = 25°C.

‡ This is the increase in supply current for each input that is at the specified TTL voltage level rather than V_{CC} or GND.

§ Measured by the voltage drop between the A and B terminals at the indicated current through the switch. On-state resistance is determined by the lowest voltage of the two (A or B) terminals.

switching characteristics over recommended operating free-air temperature range, C_L = 50 pF (unless otherwise noted) (see Figure 1)

PARAMETER	FROM (INPUT)	TO (OUTPUT)	MIN	MAX	UNIT
t_{pd}¶	A or B	B or A		0.25	ns
t_{en}	$\overline{OE}$	A or B	1.5	9.8	ns
t_{dis}	$\overline{OE}$	A or B	1.5	8.9	ns

¶ The propagation delay is the calculated RC time constant of the typical on-state resistance of the switch and the specified load capacitance, when driven by an ideal voltage source (zero output impedance).

PARAMETER MEASUREMENT INFORMATION

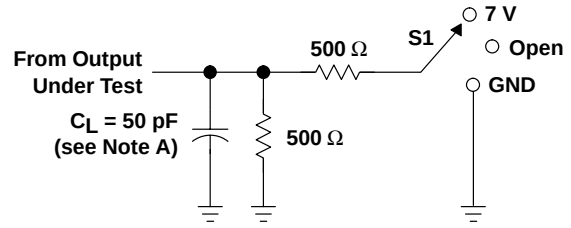

LOAD CIRCUIT

TEST	S1
t_{pd}	Open
t_{PLZ}/t_{PZL}	7 V
t_{PHZ}/t_{PZH}	Open

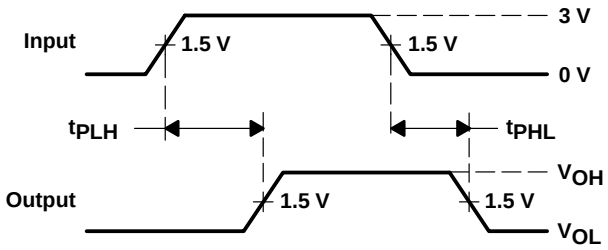

VOLTAGE WAVEFORMS
PROPAGATION DELAY TIMES

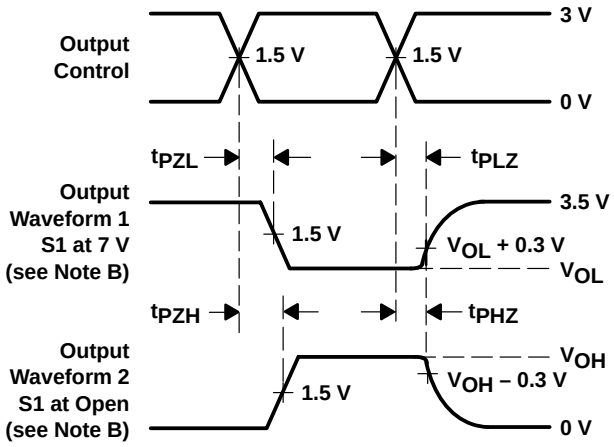

VOLTAGE WAVEFORMS
ENABLE AND DISABLE TIMES

NOTES: A. C_L includes probe and jig capacitance.
B. Waveform 1 is for an output with internal conditions such that the output is low except when disabled by the output control. Waveform 2 is for an output with internal conditions such that the output is high except when disabled by the output control.
C. All input pulses are supplied by generators having the following characteristics: PRR ≤ 10 MHz, Z_O = 50 Ω, t_r ≤ 2.5 ns, t_f ≤ 2.5 ns.
D. The outputs are measured one at a time with one transition per measurement.
E. t_{PLZ} and t_{PHZ} are the same as t_{dis}.
F. t_{PZL} and t_{PZH} are the same as t_{en}.
G. t_{PLH} and t_{PHL} are the same as t_{pd}.

Figure 1. Load Circuit and Voltage Waveforms

TYPICAL CHARACTERISTICS

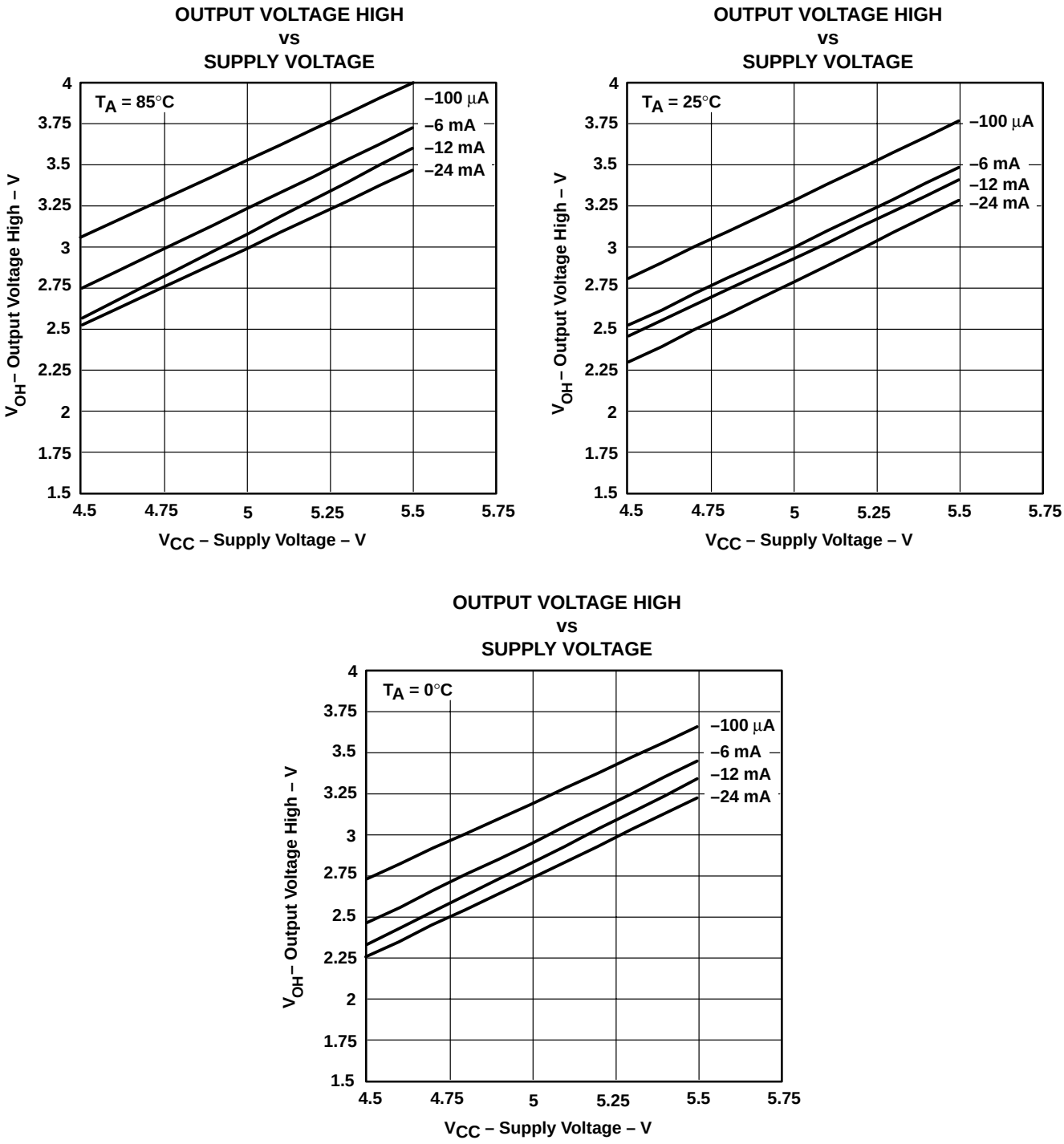

Figure 2. V_{OH} Values

PACKAGING INFORMATION

Orderable Device	Status (1)	Package Type	Package Drawing	Pins	Package Qty	Eco Plan (2)	Lead/Ball Finish	MSL Peak Temp (3)
74CBTD16211DGGRE4	ACTIVE	TSSOP	DGG	56	2000	Green (RoHS & no Sb/Br)	CU NIPDAU	Level-1-260C-UNLIM
74CBTD16211DGGRG4	ACTIVE	TSSOP	DGG	56	2000	Green (RoHS & no Sb/Br)	CU NIPDAU	Level-1-260C-UNLIM
74CBTD16211DGVRE4	ACTIVE	TVSOP	DGV	56	2000	Green (RoHS & no Sb/Br)	CU NIPDAU	Level-1-260C-UNLIM
74CBTD16211DGVRG4	ACTIVE	TVSOP	DGV	56	2000	Green (RoHS & no Sb/Br)	CU NIPDAU	Level-1-260C-UNLIM
74CBTD16211DLRG4	ACTIVE	SSOP	DL	56	1000	Green (RoHS & no Sb/Br)	CU NIPDAU	Level-1-260C-UNLIM
SN74CBTD16211DGGR	ACTIVE	TSSOP	DGG	56	2000	Green (RoHS & no Sb/Br)	CU NIPDAU	Level-1-260C-UNLIM
SN74CBTD16211DGVR	ACTIVE	TVSOP	DGV	56	2000	Green (RoHS & no Sb/Br)	CU NIPDAU	Level-1-260C-UNLIM
SN74CBTD16211DL	ACTIVE	SSOP	DL	56	20	Green (RoHS & no Sb/Br)	CU NIPDAU	Level-1-260C-UNLIM
SN74CBTD16211DLG4	ACTIVE	SSOP	DL	56	20	Green (RoHS & no Sb/Br)	CU NIPDAU	Level-1-260C-UNLIM
SN74CBTD16211DLR	ACTIVE	SSOP	DL	56	1000	Green (RoHS & no Sb/Br)	CU NIPDAU	Level-1-260C-UNLIM

(1) The marketing status values are defined as follows:
ACTIVE: Product device recommended for new designs.
LIFEBUY: TI has announced that the device will be discontinued, and a lifetime-buy period is in effect.
NRND: Not recommended for new designs. Device is in production to support existing customers, but TI does not recommend using this part in a new design.
PREVIEW: Device has been announced but is not in production. Samples may or may not be available.
OBSOLETE: TI has discontinued the production of the device.

(2) Eco Plan - The planned eco-friendly classification: Pb-Free (RoHS), Pb-Free (RoHS Exempt), or Green (RoHS & no Sb/Br) - please check http://www.ti.com/productcontent for the latest availability information and additional product content details.
TBD: The Pb-Free/Green conversion plan has not been defined.
Pb-Free (RoHS): TI's terms "Lead-Free" or "Pb-Free" mean semiconductor products that are compatible with the current RoHS requirements for all 6 substances, including the requirement that lead not exceed 0.1% by weight in homogeneous materials. Where designed to be soldered at high temperatures, TI Pb-Free products are suitable for use in specified lead-free processes.
Pb-Free (RoHS Exempt): This component has a RoHS exemption for either 1) lead-based flip-chip solder bumps used between the die and package, or 2) lead-based die adhesive used between the die and leadframe. The component is otherwise considered Pb-Free (RoHS compatible) as defined above.
Green (RoHS & no Sb/Br): TI defines "Green" to mean Pb-Free (RoHS compatible), and free of Bromine (Br) and Antimony (Sb) based flame retardants (Br or Sb do not exceed 0.1% by weight in homogeneous material)

(3) MSL, Peak Temp. -- The Moisture Sensitivity Level rating according to the JEDEC industry standard classifications, and peak solder temperature.

Important Information and Disclaimer: The information provided on this page represents TI's knowledge and belief as of the date that it is provided. TI bases its knowledge and belief on information provided by third parties, and makes no representation or warranty as to the accuracy of such information. Efforts are underway to better integrate information from third parties. TI has taken and continues to take reasonable steps to provide representative and accurate information but may not have conducted destructive testing or chemical analysis on incoming materials and chemicals. TI and TI suppliers consider certain information to be proprietary, and thus CAS numbers and other limited information may not be available for release.

In no event shall TI's liability arising out of such information exceed the total purchase price of the TI part(s) at issue in this document sold by TI to Customer on an annual basis.

TAPE AND REEL INFORMATION

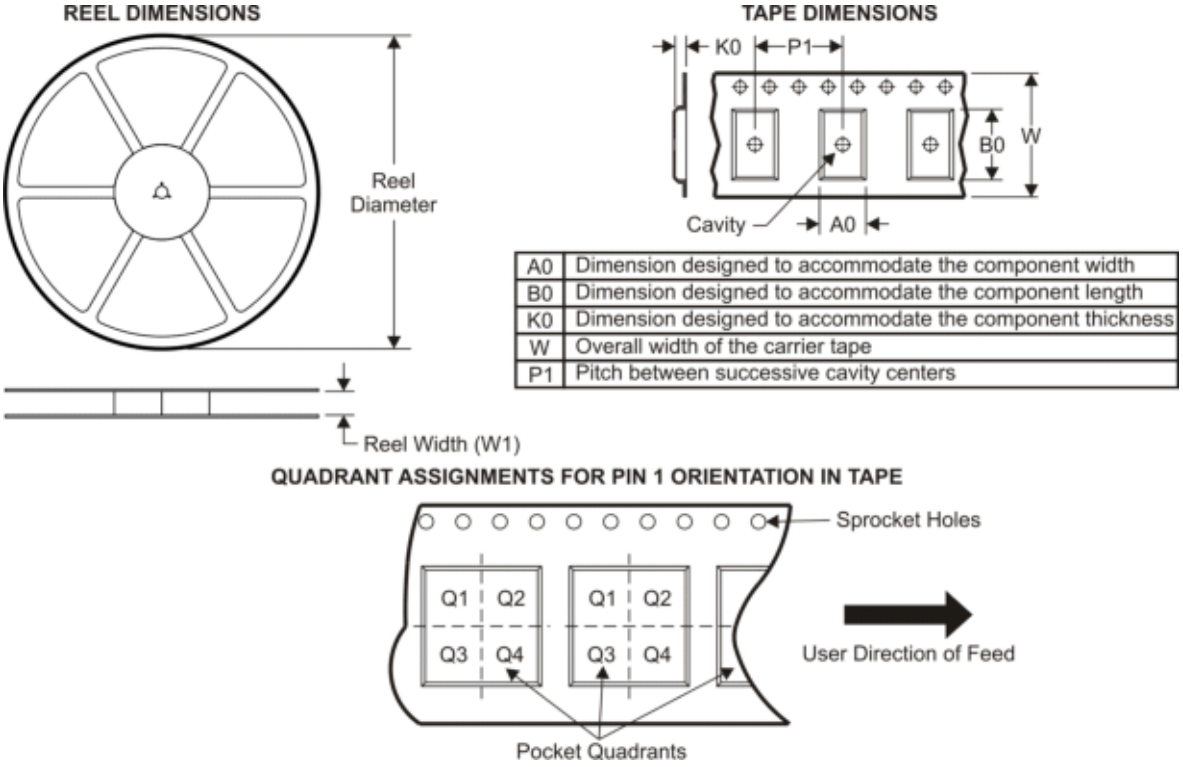

A0	Dimension designed to accommodate the component width
B0	Dimension designed to accommodate the component length
K0	Dimension designed to accommodate the component thickness
W	Overall width of the carrier tape
P1	Pitch between successive cavity centers

*All dimensions are nominal

Device	Package Type	Package Drawing	Pins	SPQ	Reel Diameter (mm)	Reel Width W1 (mm)	A0 (mm)	B0 (mm)	K0 (mm)	P1 (mm)	W (mm)	Pin1 Quadrant
SN74CBTD16211DGGR	TSSOP	DGG	56	2000	330.0	24.4	8.6	15.6	1.8	12.0	24.0	Q1
SN74CBTD16211DGVR	TVSOP	DGV	56	2000	330.0	24.4	6.8	11.7	1.6	12.0	24.0	Q1
SN74CBTD16211DLR	SSOP	DL	56	1000	330.0	32.4	11.35	18.67	3.1	16.0	32.0	Q1

TAPE AND REEL BOX DIMENSIONS

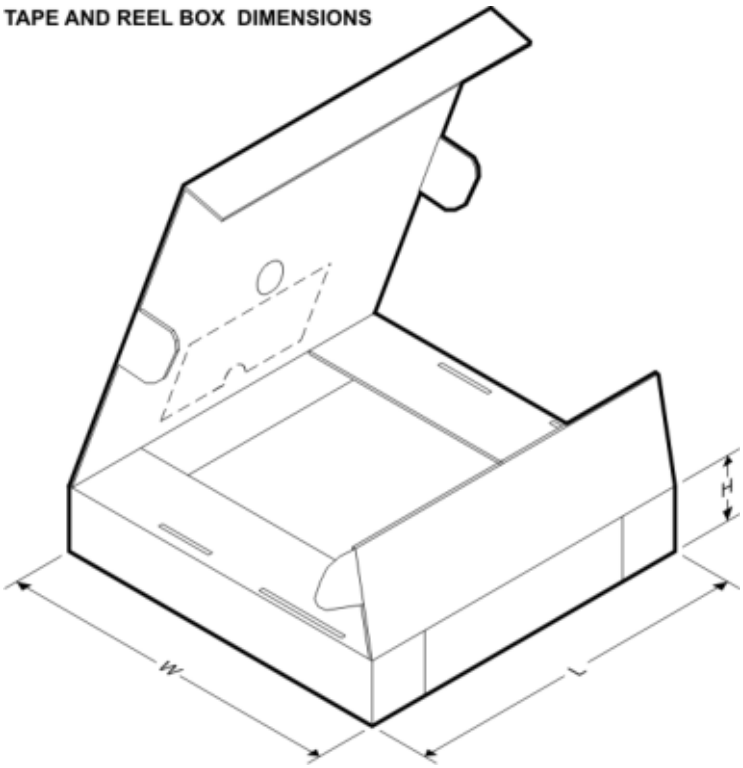

*All dimensions are nominal

Device	Package Type	Package Drawing	Pins	SPQ	Length (mm)	Width (mm)	Height (mm)
SN74CBTD16211DGGR	TSSOP	DGG	56	2000	346.0	346.0	41.0
SN74CBTD16211DGVR	TVSOP	DGV	56	2000	346.0	346.0	41.0
SN74CBTD16211DLR	SSOP	DL	56	1000	346.0	346.0	49.0

DL (R-PDSO-G**)

PLASTIC SMALL-OUTLINE PACKAGE

48 PINS SHOWN

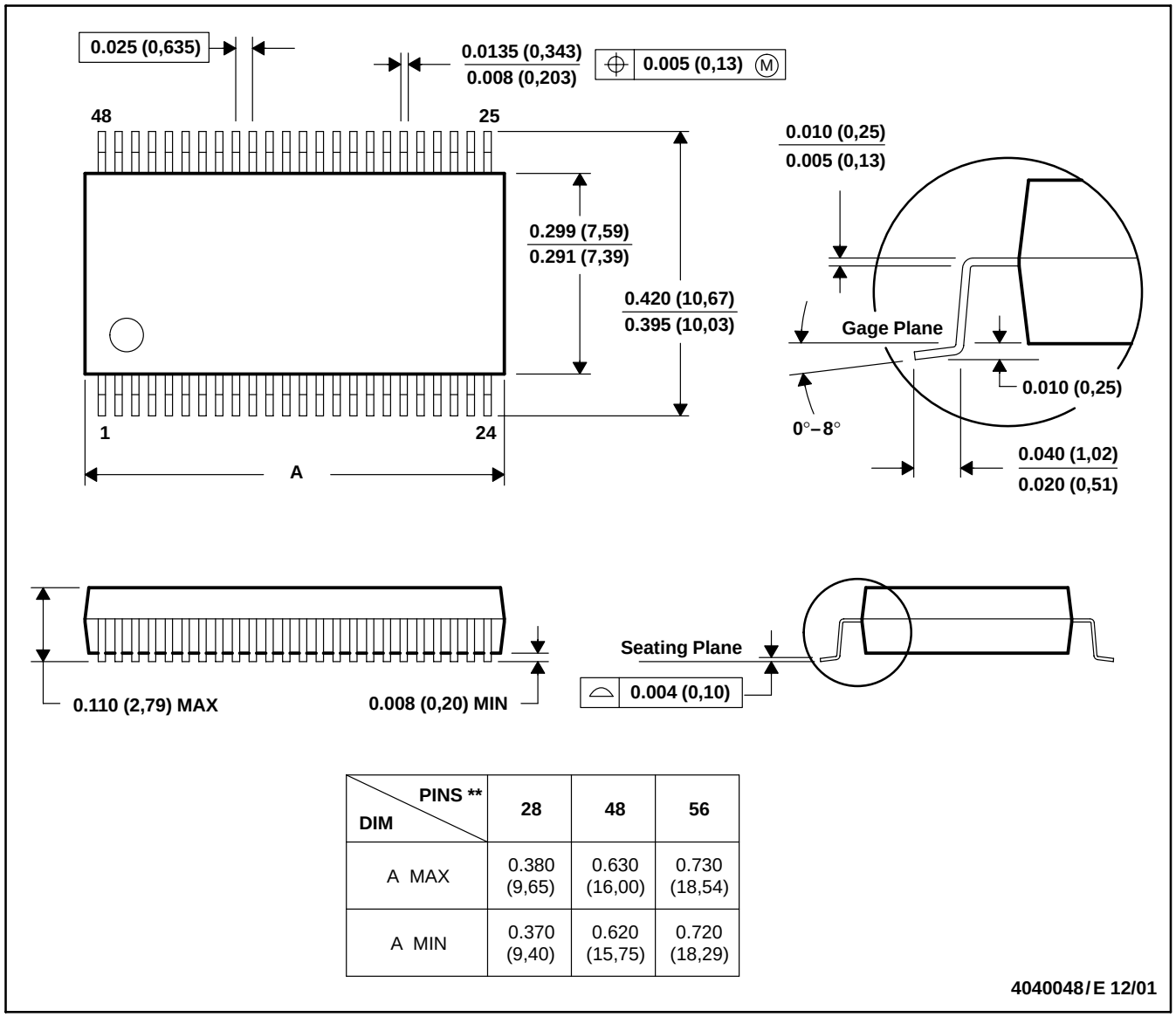

DIM \ PINS **	28	48	56
A MAX	0.380 (9,65)	0.630 (16,00)	0.730 (18,54)
A MIN	0.370 (9,40)	0.620 (15,75)	0.720 (18,29)

4040048/E 12/01

NOTES: A. All linear dimensions are in inches (millimeters).
B. This drawing is subject to change without notice.
C. Body dimensions do not include mold flash or protrusion not to exceed 0.006 (0,15).
D. Falls within JEDEC MO-118

MTSS003D – JANUARY 1995 – REVISED JANUARY 1998

DGG (R-PDSO-G)** **PLASTIC SMALL-OUTLINE PACKAGE**

48 PINS SHOWN

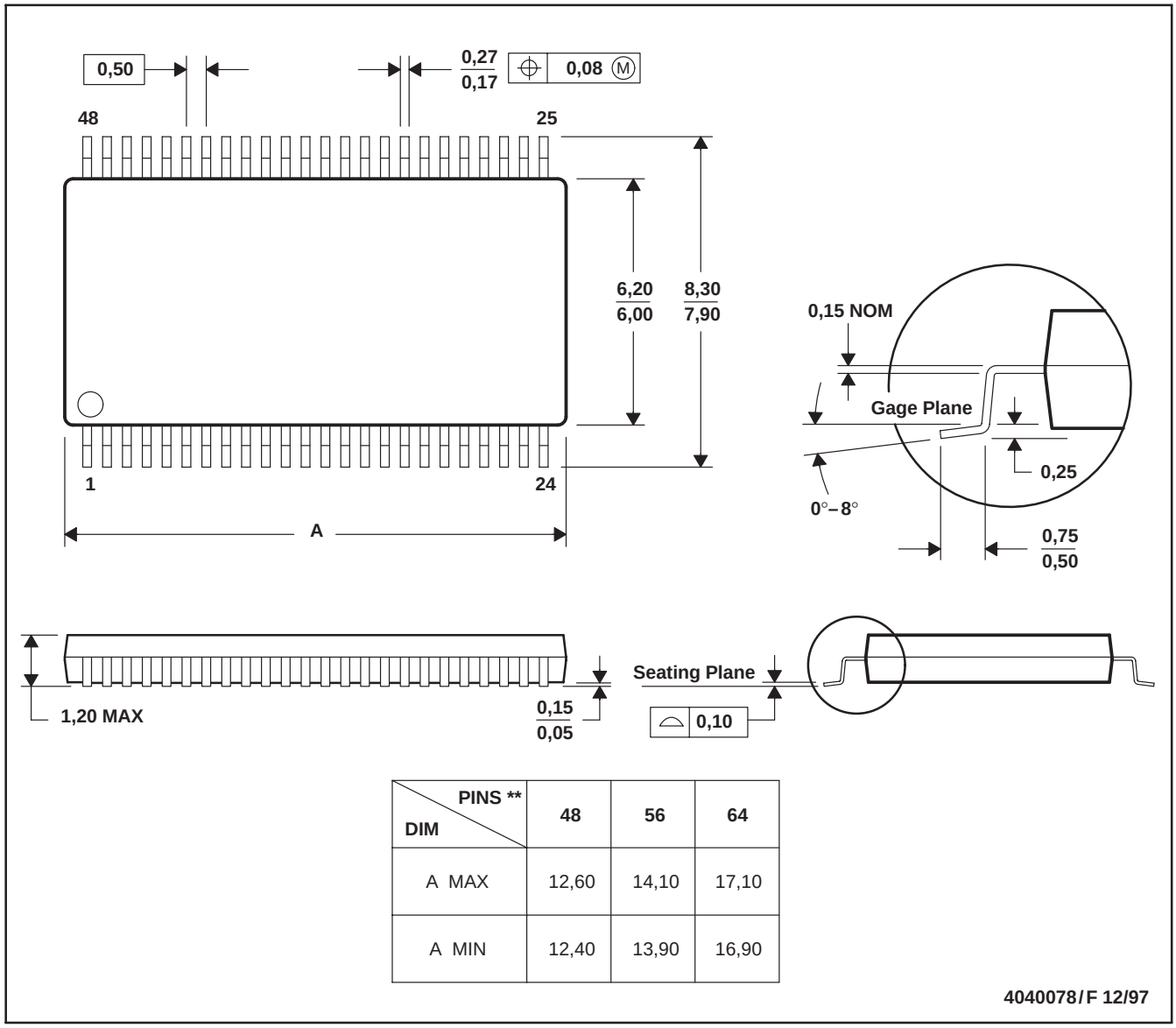

DIM \ PINS **	48	56	64
A MAX	12,60	14,10	17,10
A MIN	12,40	13,90	16,90

NOTES: A. All linear dimensions are in millimeters.
B. This drawing is subject to change without notice.
C. Body dimensions do not include mold protrusion not to exceed 0,15.
D. Falls within JEDEC MO-153

DGV (R-PDSO-G)** **PLASTIC SMALL-OUTLINE**

24 PINS SHOWN

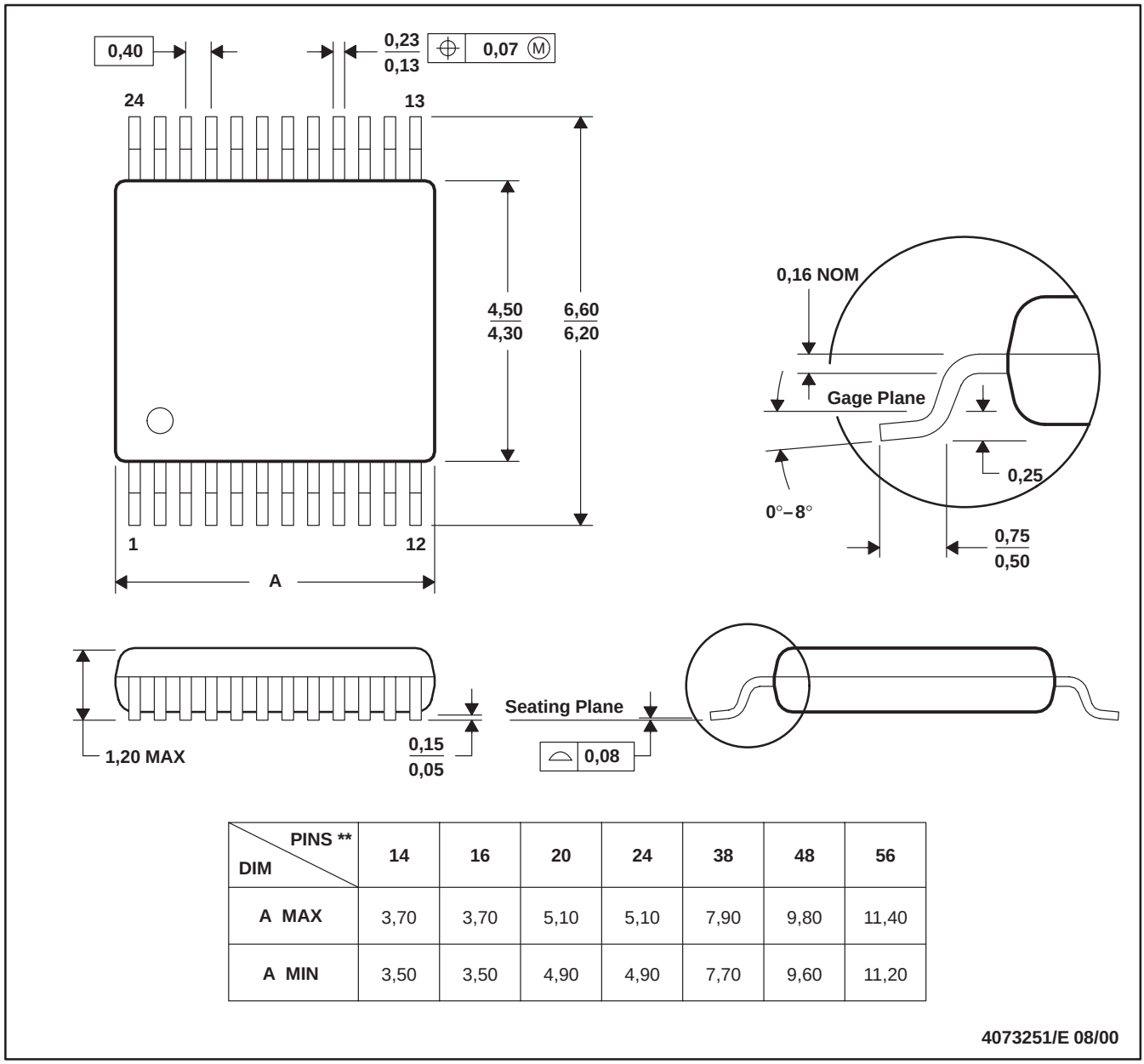

DIM \ PINS **	14	16	20	24	38	48	56
A MAX	3,70	3,70	5,10	5,10	7,90	9,80	11,40
A MIN	3,50	3,50	4,90	4,90	7,70	9,60	11,20

4073251/E 08/00

NOTES: A. All linear dimensions are in millimeters.
B. This drawing is subject to change without notice.
C. Body dimensions do not include mold flash or protrusion, not to exceed 0,15 per side.
D. Falls within JEDEC: 24/48 Pins – MO-153
14/16/20/56 Pins – MO-194

PACKAGING INFORMATION

Orderable part number	Status (1)	Material type (2)	Package | Pins	Package qty | Carrier	RoHS (3)	Lead finish/ Ball material (4)	MSL rating/ Peak reflow (5)	Op temp (°C)	Part marking (6)
SN74CBTD16211DGGR	Active	Production	TSSOP (DGG) | 56	2000 | LARGE T&R	Yes	NIPDAU	Level-1-260C-UNLIM	-40 to 85	CBTD16211
SN74CBTD16211DGGR.A	Active	Production	TSSOP (DGG) | 56	2000 | LARGE T&R	Yes	NIPDAU	Level-1-260C-UNLIM	-40 to 85	CBTD16211
SN74CBTD16211DGVR	Active	Production	TVSOP (DGV) | 56	2000 | LARGE T&R	Yes	NIPDAU	Level-1-260C-UNLIM	-40 to 85	CYD211
SN74CBTD16211DGVR.A	Active	Production	TVSOP (DGV) | 56	2000 | LARGE T&R	Yes	NIPDAU	Level-1-260C-UNLIM	-40 to 85	CYD211
SN74CBTD16211DL	NRND	Production	SSOP (DL) | 56	20 | TUBE	Yes	NIPDAU	Level-1-260C-UNLIM	-40 to 85	CBTD16211
SN74CBTD16211DL.A	NRND	Production	SSOP (DL) | 56	20 | TUBE	Yes	NIPDAU	Level-1-260C-UNLIM	-40 to 85	CBTD16211
SN74CBTD16211DLR	Active	Production	SSOP (DL) | 56	1000 | LARGE T&R	Yes	NIPDAU	Level-1-260C-UNLIM	-40 to 85	CBTD16211
SN74CBTD16211DLR.A	Active	Production	SSOP (DL) | 56	1000 | LARGE T&R	Yes	NIPDAU	Level-1-260C-UNLIM	-40 to 85	CBTD16211

(1) **Status:** For more details on status, see our product life cycle.

(2) **Material type:** When designated, preproduction parts are prototypes/experimental devices, and are not yet approved or released for full production. Testing and final process, including without limitation quality assurance, reliability performance testing, and/or process qualification, may not yet be complete, and this item is subject to further changes or possible discontinuation. If available for ordering, purchases will be subject to an additional waiver at checkout, and are intended for early internal evaluation purposes only. These items are sold without warranties of any kind.

(3) **RoHS values:** Yes, No, RoHS Exempt. See the TI RoHS Statement for additional information and value definition.

(4) **Lead finish/Ball material:** Parts may have multiple material finish options. Finish options are separated by a vertical ruled line. Lead finish/Ball material values may wrap to two lines if the finish value exceeds the maximum column width.

(5) **MSL rating/Peak reflow:** The moisture sensitivity level ratings and peak solder (reflow) temperatures. In the event that a part has multiple moisture sensitivity ratings, only the lowest level per JEDEC standards is shown. Refer to the shipping label for the actual reflow temperature that will be used to mount the part to the printed circuit board.

(6) **Part marking:** There may be an additional marking, which relates to the logo, the lot trace code information, or the environmental category of the part.

Multiple part markings will be inside parentheses. Only one part marking contained in parentheses and separated by a "~" will appear on a part. If a line is indented then it is a continuation of the previous line and the two combined represent the entire part marking for that device.

Important Information and Disclaimer: The information provided on this page represents TI's knowledge and belief as of the date that it is provided. TI bases its knowledge and belief on information provided by third parties, and makes no representation or warranty as to the accuracy of such information. Efforts are underway to better integrate information from third parties. TI has taken and continues to take reasonable steps to provide representative and accurate information but may not have conducted destructive testing or chemical analysis on incoming materials and chemicals. TI and TI suppliers consider certain information to be proprietary, and thus CAS numbers and other limited information may not be available for release.

In no event shall TI's liability arising out of such information exceed the total purchase price of the TI part(s) at issue in this document sold by TI to Customer on an annual basis.

TAPE AND REEL INFORMATION

REEL DIMENSIONS

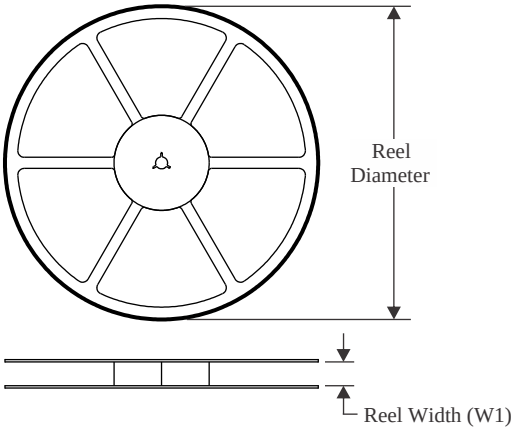

TAPE DIMENSIONS

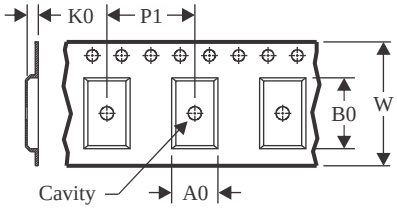

A0	Dimension designed to accommodate the component width
B0	Dimension designed to accommodate the component length
K0	Dimension designed to accommodate the component thickness
W	Overall width of the carrier tape
P1	Pitch between successive cavity centers

QUADRANT ASSIGNMENTS FOR PIN 1 ORIENTATION IN TAPE

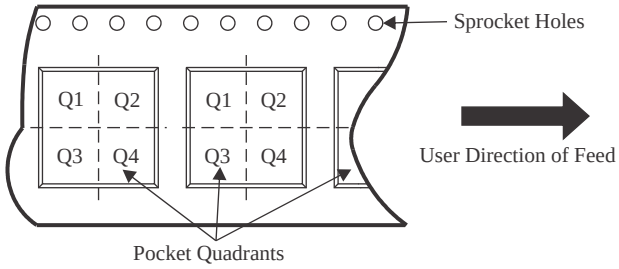

*All dimensions are nominal

Device	Package Type	Package Drawing	Pins	SPQ	Reel Diameter (mm)	Reel Width W1 (mm)	A0 (mm)	B0 (mm)	K0 (mm)	P1 (mm)	W (mm)	Pin1 Quadrant
SN74CBTD16211DGGR	TSSOP	DGG	56	2000	330.0	24.4	8.9	14.7	1.4	12.0	24.0	Q1
SN74CBTD16211DGVR	TVSOP	DGV	56	2000	330.0	24.4	6.8	11.7	1.6	12.0	24.0	Q1
SN74CBTD16211DLR	SSOP	DL	56	1000	330.0	32.4	11.35	18.67	3.1	16.0	32.0	Q1

TAPE AND REEL BOX DIMENSIONS

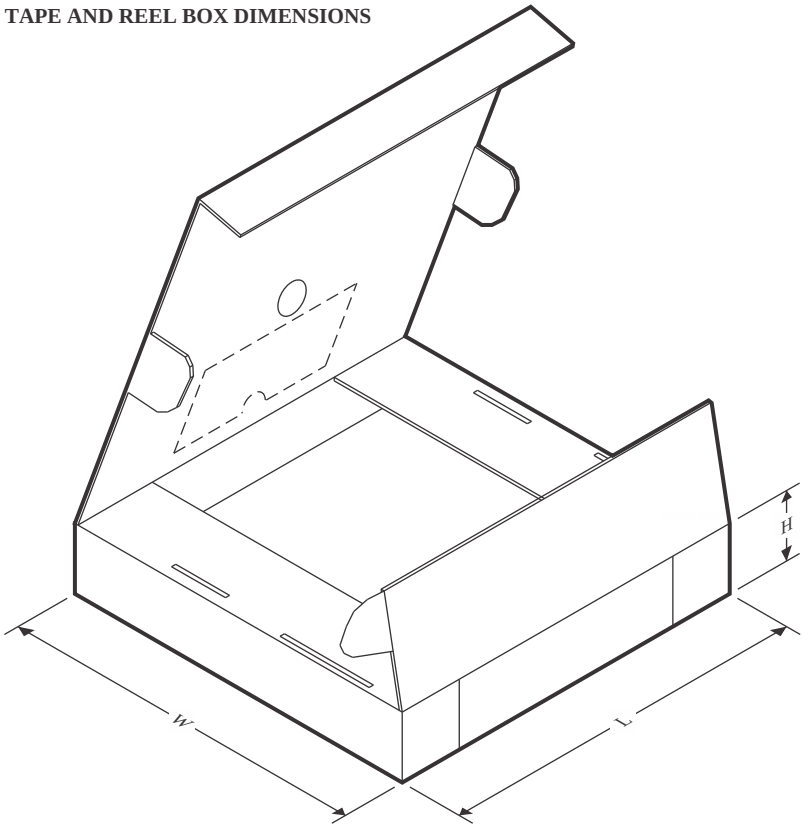

*All dimensions are nominal

Device	Package Type	Package Drawing	Pins	SPQ	Length (mm)	Width (mm)	Height (mm)
SN74CBTD16211DGGR	TSSOP	DGG	56	2000	356.0	356.0	45.0
SN74CBTD16211DGVR	TVSOP	DGV	56	2000	356.0	356.0	45.0
SN74CBTD16211DLR	SSOP	DL	56	1000	356.0	356.0	53.0

TUBE

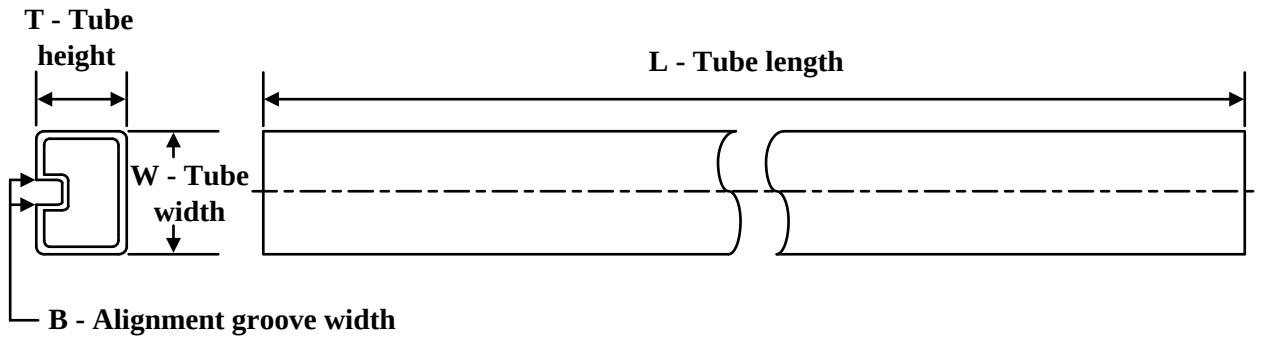

*All dimensions are nominal

Device	Package Name	Package Type	Pins	SPQ	L (mm)	W (mm)	T (µm)	B (mm)
SN74CBTD16211DL	DL	SSOP	56	20	473.7	14.24	5110	7.87
SN74CBTD16211DL.A	DL	SSOP	56	20	473.7	14.24	5110	7.87

DGV (R-PDSO-G)** **PLASTIC SMALL-OUTLINE**

24 PINS SHOWN

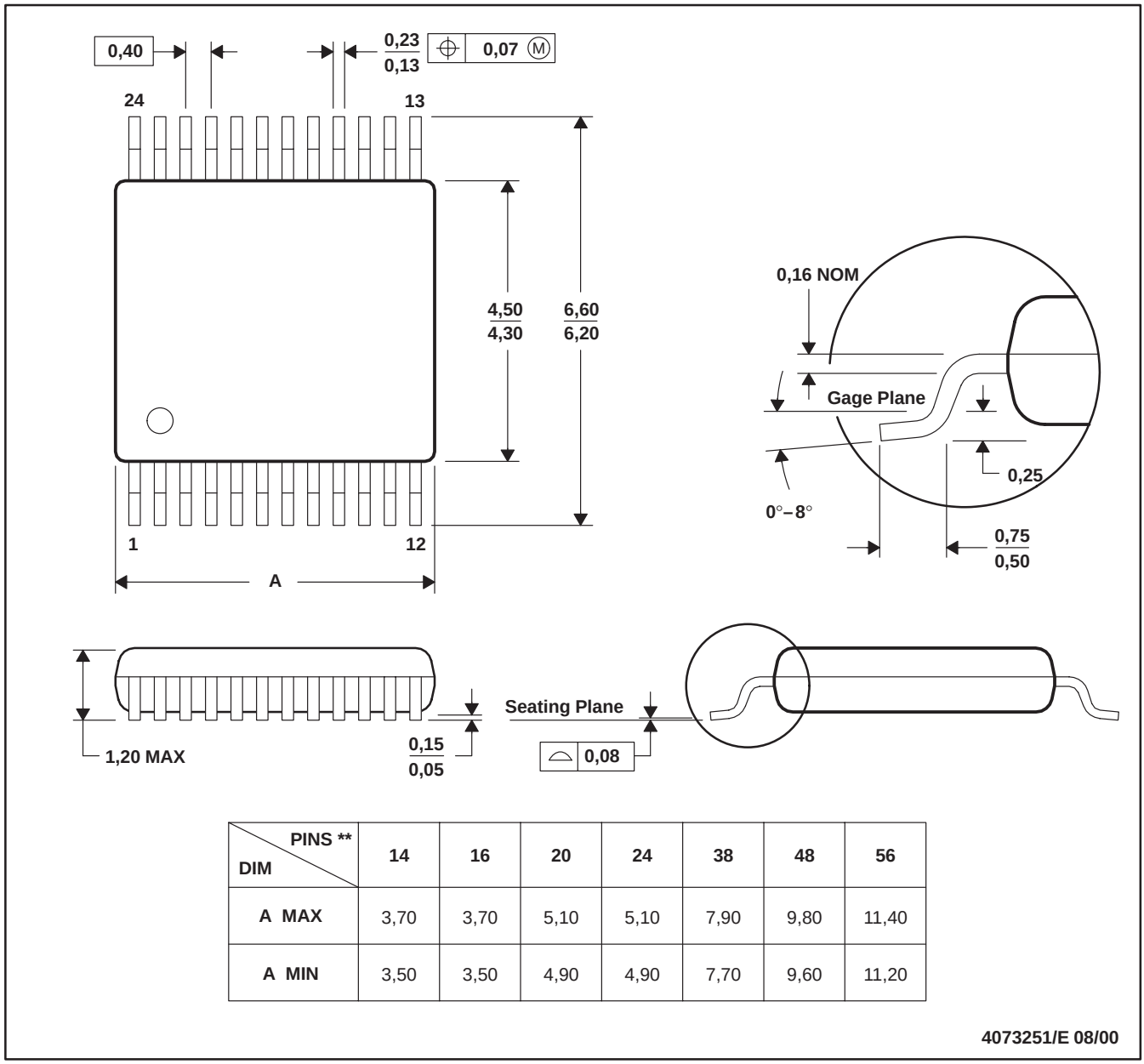

DIM \ PINS **	14	16	20	24	38	48	56
A MAX	3,70	3,70	5,10	5,10	7,90	9,80	11,40
A MIN	3,50	3,50	4,90	4,90	7,70	9,60	11,20

4073251/E 08/00

NOTES: A. All linear dimensions are in millimeters.
B. This drawing is subject to change without notice.
C. Body dimensions do not include mold flash or protrusion, not to exceed 0,15 per side.
D. Falls within JEDEC: 24/48 Pins – MO-153
14/16/20/56 Pins – MO-194

PACKAGE OUTLINE

DGV0056A

TVSOP - 1.2 mm max height

SMALL OUTLINE PACKAGE

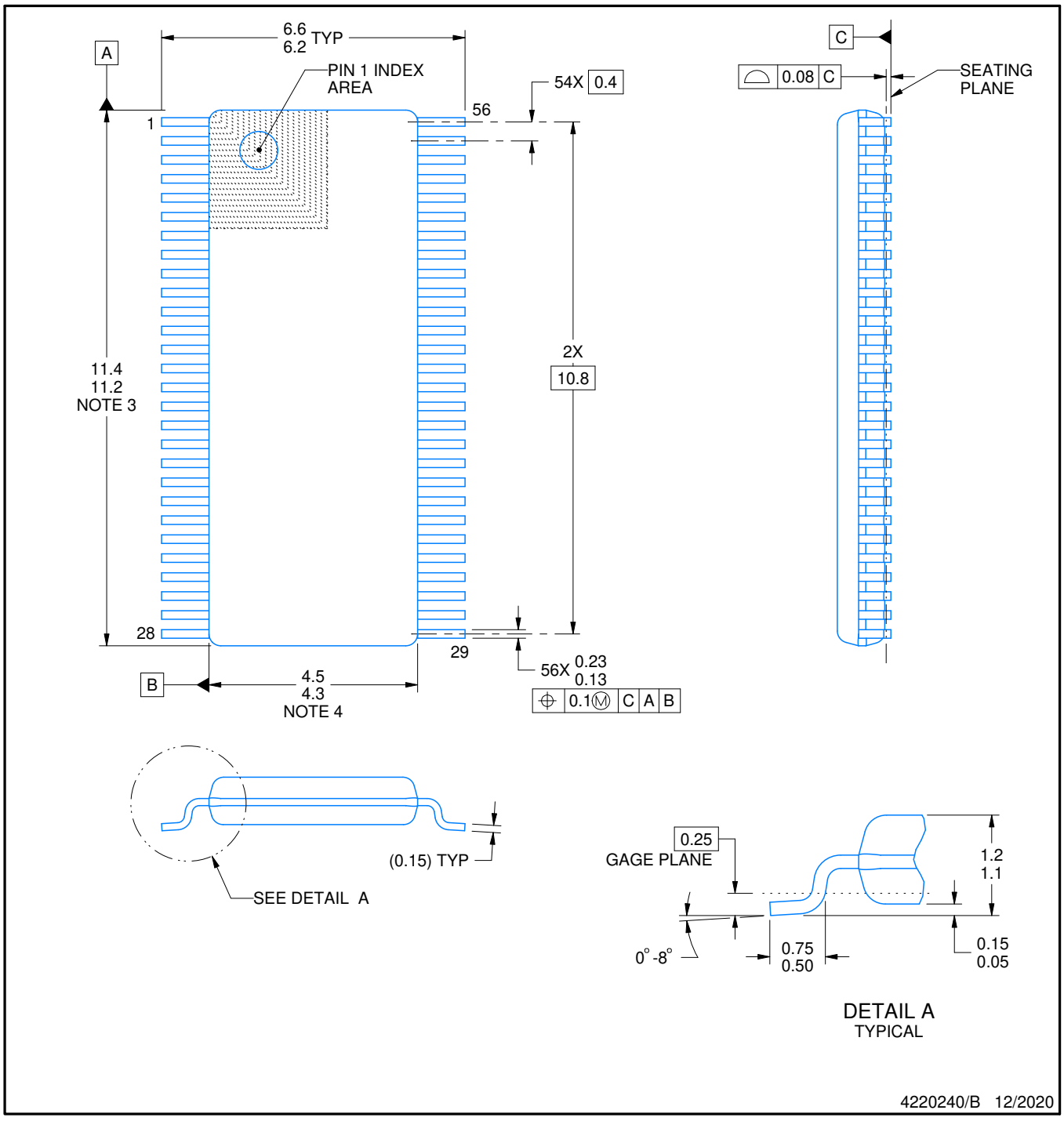

NOTES:

1. All linear dimensions are in millimeters. Any dimensions in parenthesis are for reference only. Dimensioning and tolerancing per ASME Y14.5M.
2. This drawing is subject to change without notice.
3. This dimension does not include mold flash, protrusions, or gate burrs. Mold flash, protrusions, or gate burrs shall not exceed 0.15 mm per side.
4. This dimension does not include interlead flash. Interlead flash shall not exceed 0.25 mm per side.
5. Reference JEDEC registration MO-194.

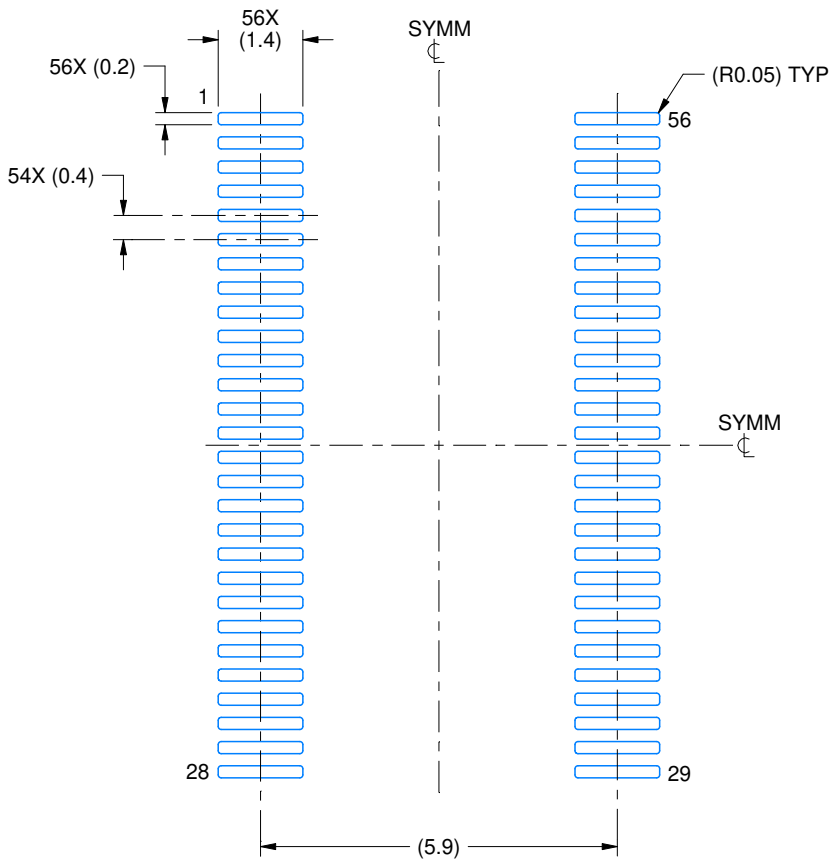

LAND PATTERN EXAMPLE
EXPOSED METAL SHOWN
SCALE: 8X

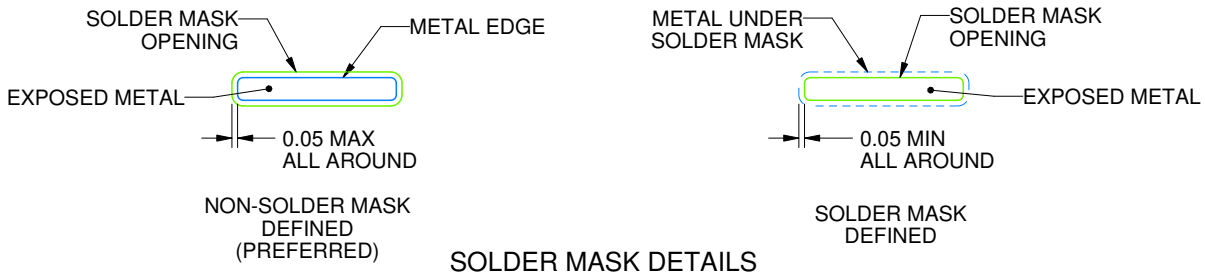

SOLDER MASK DETAILS

4220240/B 12/2020

NOTES: (continued)

6. Publication IPC-7351 may have alternate designs.
7. Solder mask tolerances between and around signal pads can vary based on board fabrication site.

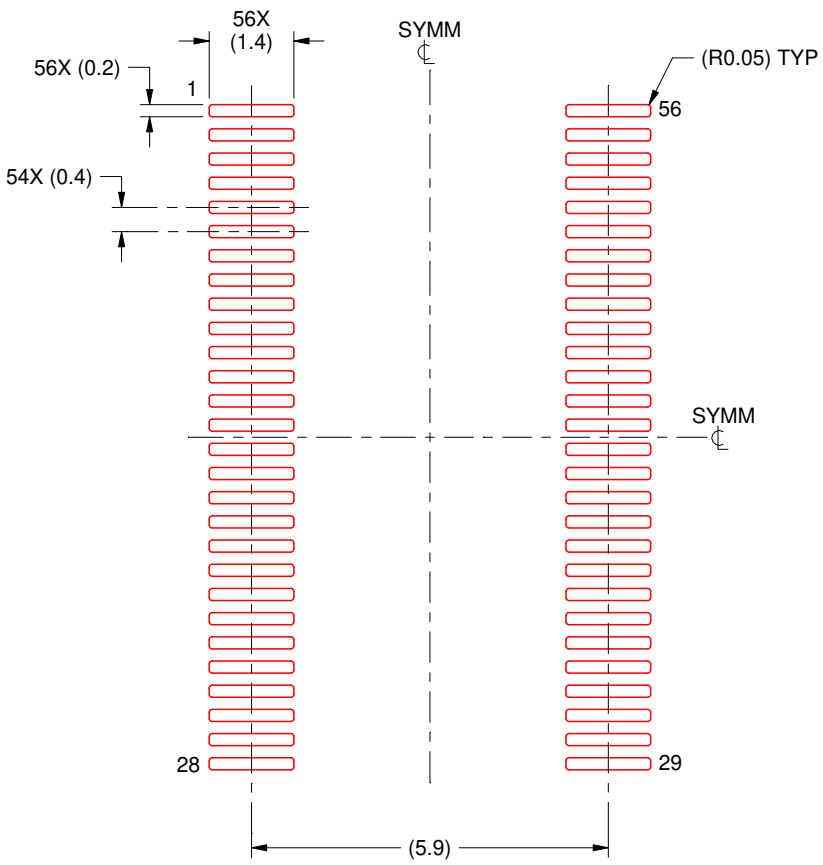

SOLDER PASTE EXAMPLE
BASED ON 0.125 mm THICK STENCIL
SCALE: 8X

4220240/B 12/2020

NOTES: (continued)

8. Laser cutting apertures with trapezoidal walls and rounded corners may offer better paste release. IPC-7525 may have alternate design recommendations.
9. Board assembly site may have different recommendations for stencil design.

DL (R–PDSO–G56) PLASTIC SMALL–OUTLINE PACKAGE

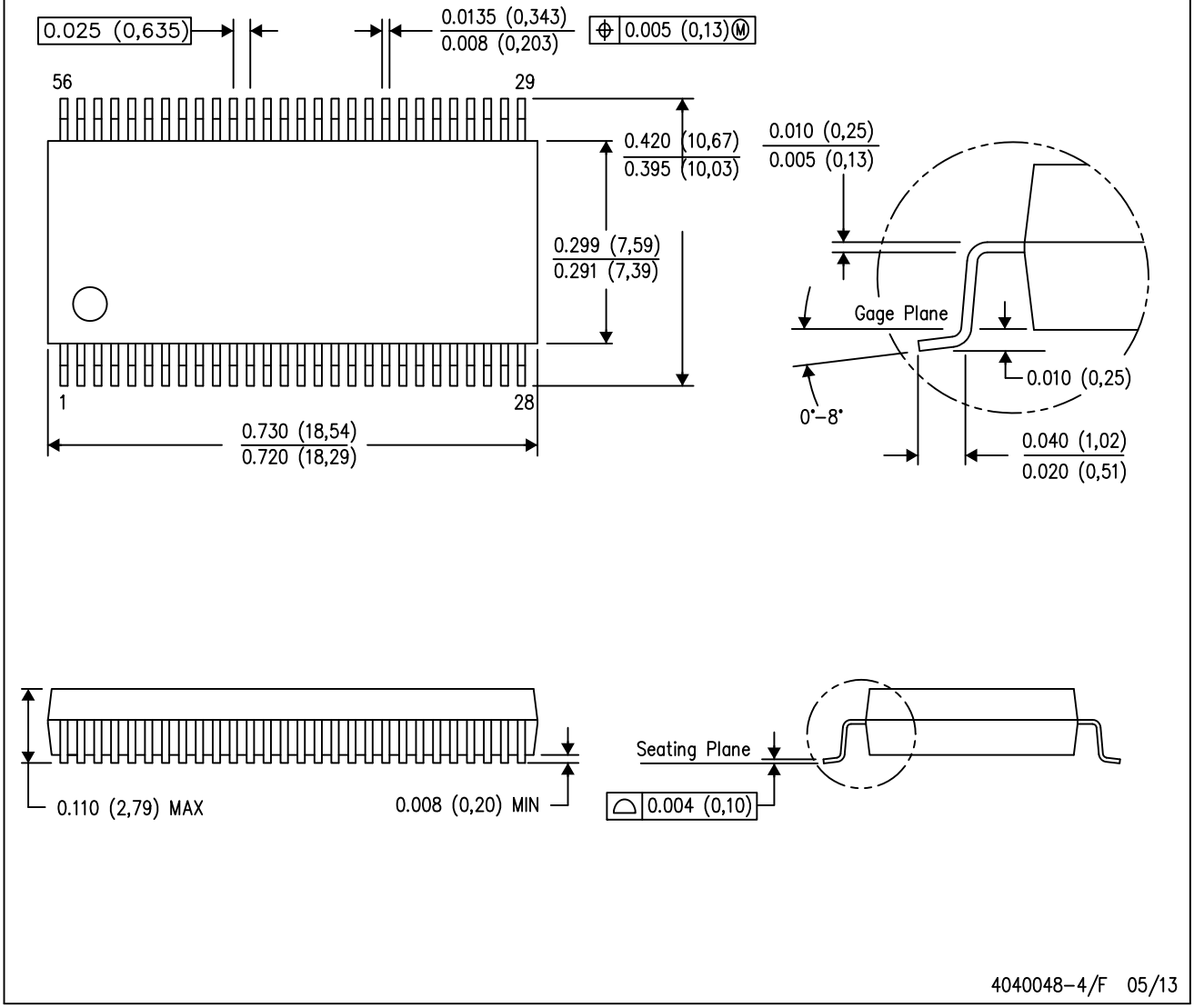

NOTES:
A. All linear dimensions are in inches (millimeters).
B. This drawing is subject to change without notice.
C. Body dimensions do not include mold flash or protrusion not to exceed 0.006 (0,15).
D. Falls within JEDEC MO–118

PowerPAD is a trademark of Texas Instruments.

PACKAGE OUTLINE

DGG0056A

TSSOP - 1.2 mm max height

SMALL OUTLINE PACKAGE

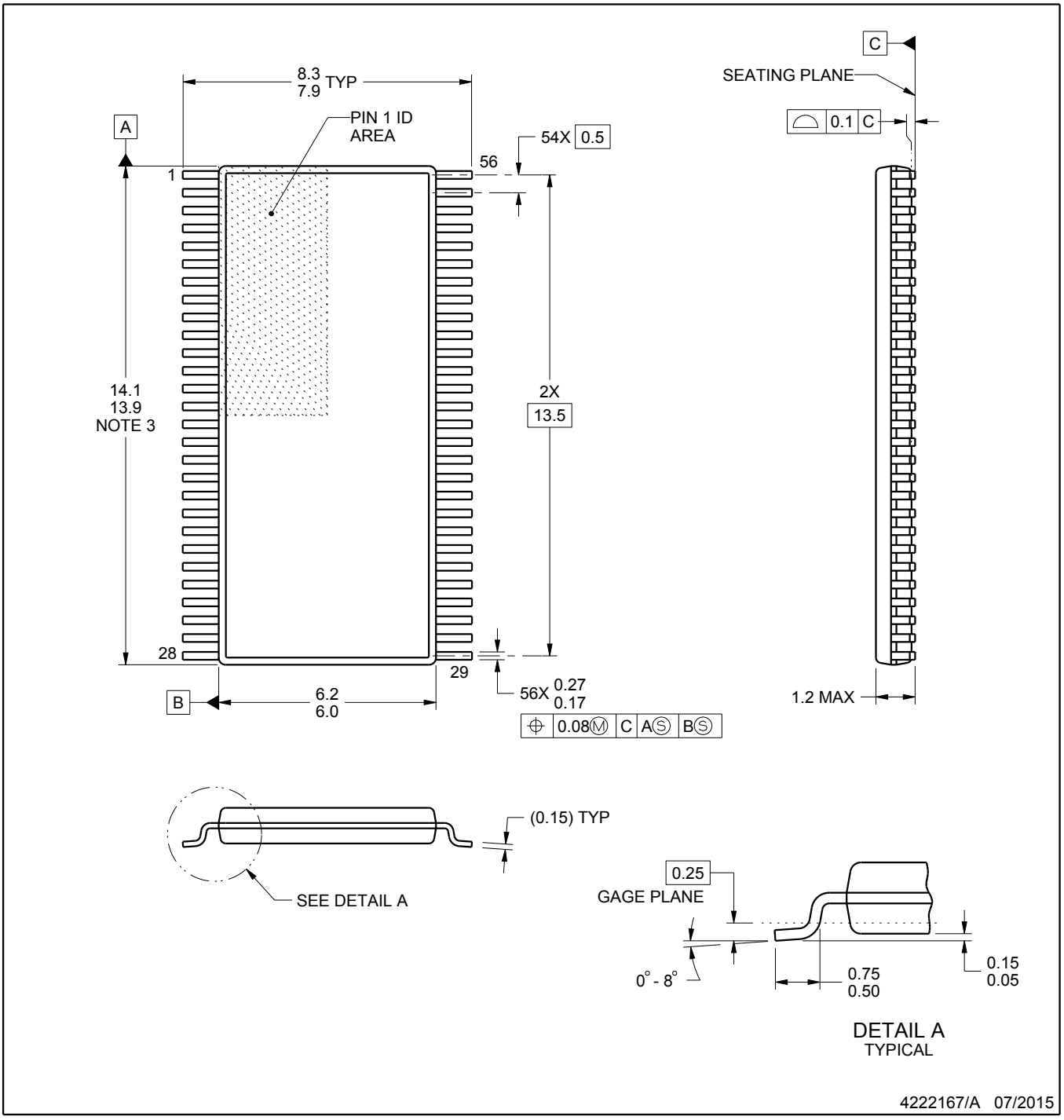

NOTES:

1. All linear dimensions are in millimeters. Any dimensions in parenthesis are for reference only. Dimensioning and tolerancing per ASME Y14.5M.
2. This drawing is subject to change without notice.
3. This dimension does not include mold flash, protrusions, or gate burrs. Mold flash, protrusions, or gate burrs shall not exceed 0.15 mm per side.
4. Reference JEDEC registration MO-153.

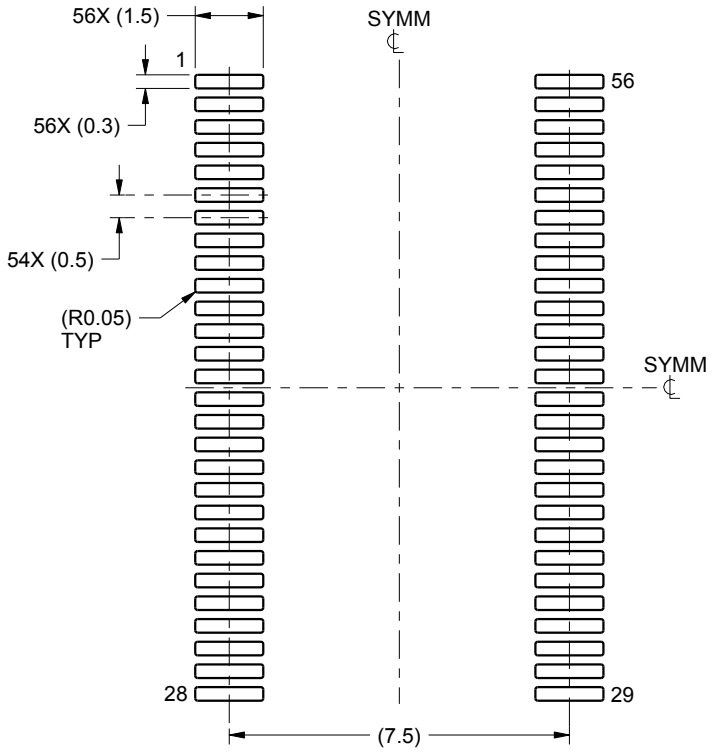

LAND PATTERN EXAMPLE
SCALE:6X

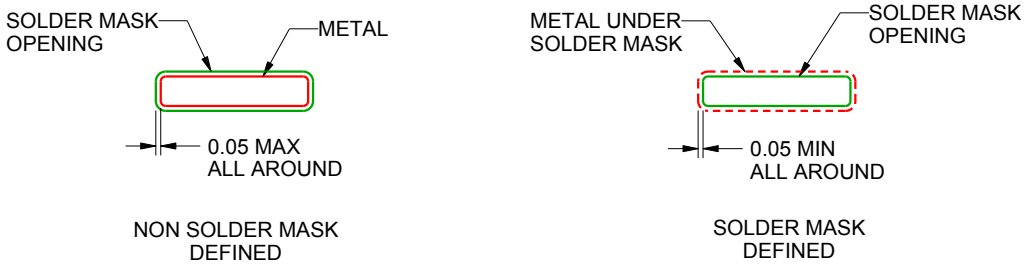

SOLDER MASK DETAILS

4222167/A 07/2015

NOTES: (continued)

5. Publication IPC-7351 may have alternate designs.
6. Solder mask tolerances between and around signal pads can vary based on board fabrication site.

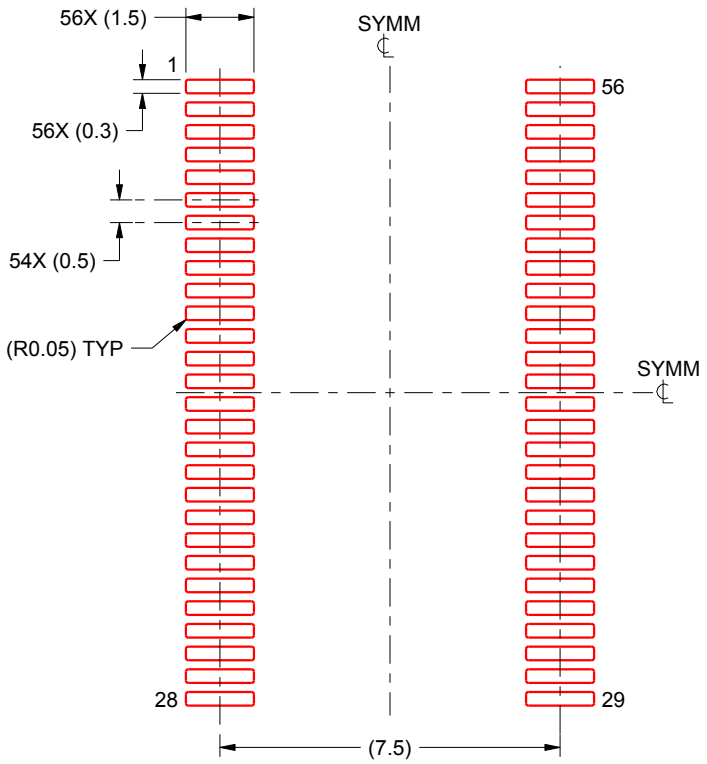

SOLDER PASTE EXAMPLE
BASED ON 0.125 mm THICK STENCIL
SCALE:6X

4222167/A 07/2015

NOTES: (continued)

7. Laser cutting apertures with trapezoidal walls and rounded corners may offer better paste release. IPC-7525 may have alternate design recommendations.
8. Board assembly site may have different recommendations for stencil design.

IMPORTANT NOTICE AND DISCLAIMER

TI PROVIDES TECHNICAL AND RELIABILITY DATA (INCLUDING DATASHEETS), DESIGN RESOURCES (INCLUDING REFERENCE DESIGNS), APPLICATION OR OTHER DESIGN ADVICE, WEB TOOLS, SAFETY INFORMATION, AND OTHER RESOURCES “AS IS” AND WITH ALL FAULTS, AND DISCLAIMS ALL WARRANTIES, EXPRESS AND IMPLIED, INCLUDING WITHOUT LIMITATION ANY IMPLIED WARRANTIES OF MERCHANTABILITY, FITNESS FOR A PARTICULAR PURPOSE OR NON-INFRINGEMENT OF THIRD PARTY INTELLECTUAL PROPERTY RIGHTS.

These resources are intended for skilled developers designing with TI products. You are solely responsible for (1) selecting the appropriate TI products for your application, (2) designing, validating and testing your application, and (3) ensuring your application meets applicable standards, and any other safety, security, regulatory or other requirements.

These resources are subject to change without notice. TI grants you permission to use these resources only for development of an application that uses the TI products described in the resource. Other reproduction and display of these resources is prohibited. No license is granted to any other TI intellectual property right or to any third party intellectual property right. TI disclaims responsibility for, and you fully indemnify TI and its representatives against any claims, damages, costs, losses, and liabilities arising out of your use of these resources.

TI’s products are provided subject to TI’s Terms of Sale, TI’s General Quality Guidelines, or other applicable terms available either on ti.com or provided in conjunction with such TI products. TI’s provision of these resources does not expand or otherwise alter TI’s applicable warranties or warranty disclaimers for TI products. Unless TI explicitly designates a product as custom or customer-specified, TI products are standard, catalog, general purpose devices.

TI objects to and rejects any additional or different terms you may propose.

Copyright © 2026, Texas Instruments Incorporated

Last updated 10/2025