- **Member of the Texas Instruments Widebus™ Family**
- **4-Ω Switch Connection Between Two Ports**
- **Rail-to-Rail Switching on Data I/O Ports**
- **I_{off} Supports Partial-Power-Down Mode Operation**
- **Break-Before-Make Feature**
- **Latch-Up Performance Exceeds 100 mA Per JESD 78, Class II**
- **ESD Protection Exceeds JESD 22**
  - **2000-V Human-Body Model (A114-A)**
  - **200-V Machine Model (A115-A)**

DGG, DGV, OR DL PACKAGE
(TOP VIEW)

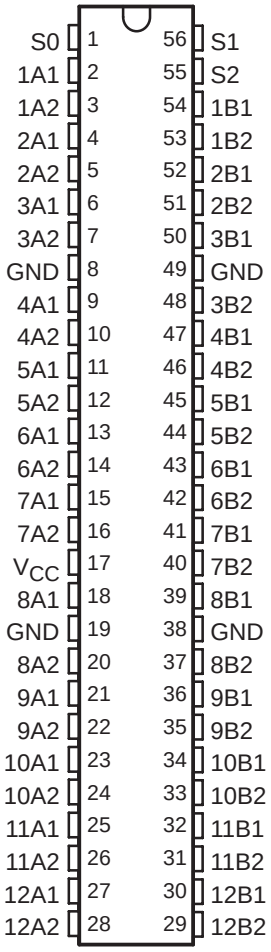

description/ordering information

The SN74CBTLV16212 provides 24 bits of high-speed bus switching or exchanging. The low on-state resistance of the switch allows connections to be made with minimal propagation delay.

The device operates as a 24-bit bus switch or a 12-bit bus exchanger, which provides data exchanging between the four signal ports via the data-select (S0, S1, S2) terminals.

This device is fully specified for partial-power-down applications using I_{off}. The I_{off} feature ensures that damaging current will not backflow through the device when it is powered down. The device has isolation during power off.

The SN74CBTLV16212 is specified by the break-before-make feature to have no through current when switching between B ports.

ORDERING INFORMATION

T_A	PACKAGE†		ORDERABLE PART NUMBER	TOP-SIDE MARKING
−40°C to 85°C	SSOP − DL	Tube	SN74CBTLV16212DL	CBTLV16212
		Tape and reel	SN74CBTLV16212DLR	
	TSSOP − DGG	Tape and reel	SN74CBTLV16212GR	CBTLV16212
	TVSOP − DGV	Tape and reel	SN74CBTLV16212VR	CN212

† Package drawings, standard packing quantities, thermal data, symbolization, and PCB design guidelines are available at www.ti.com/sc/package.

Please be aware that an important notice concerning availability, standard warranty, and use in critical applications of Texas Instruments semiconductor products and disclaimers thereto appears at the end of this data sheet.

Widebus is a trademark of Texas Instruments.

PRODUCTION DATA information is current as of publication date. Products conform to specifications per the terms of Texas Instruments standard warranty. Production processing does not necessarily include testing of all parameters.

Copyright © 2003, Texas Instruments Incorporated

FUNCTION TABLE

INPUTS			INPUTS/OUTPUTS		FUNCTION
S2	**S1**	**S0**	**A1**	**A2**	
L	L	L	Z	Z	Disconnect
L	L	H	B1	Z	A1 port = B1 port
L	H	L	B2	Z	A1 port = B2 port
L	H	H	Z	B1	A2 port = B1 port
H	L	L	Z	B2	A2 port = B2 port
H	L	H	Z	Z	Disconnect
H	H	L	B1	B2	A1 port = B1 port A2 port = B2 port
H	H	H	B2	B1	A1 port = B2 port A2 port = B1 port

logic diagram (positive logic)

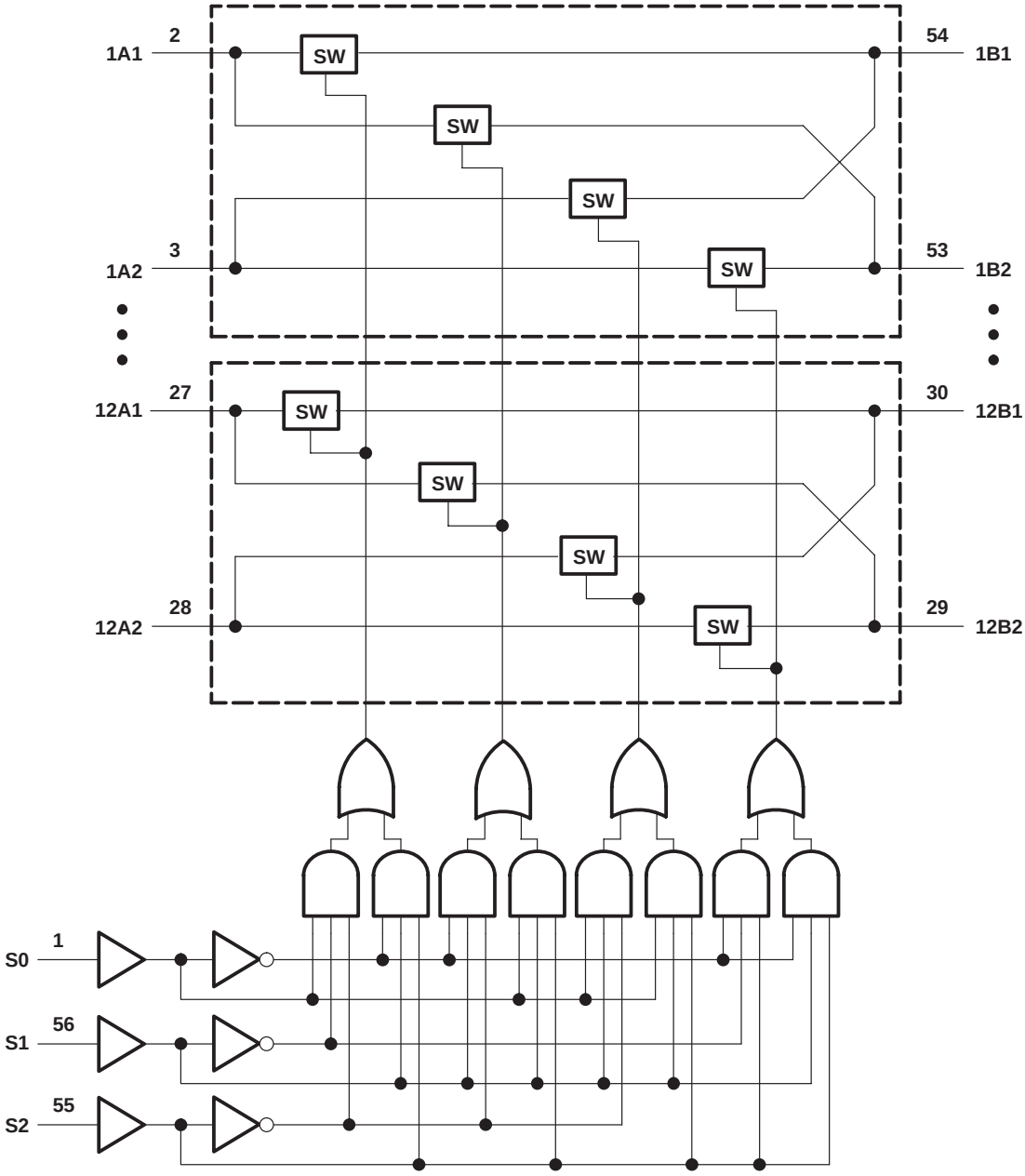

simplified schematic, each FET switch

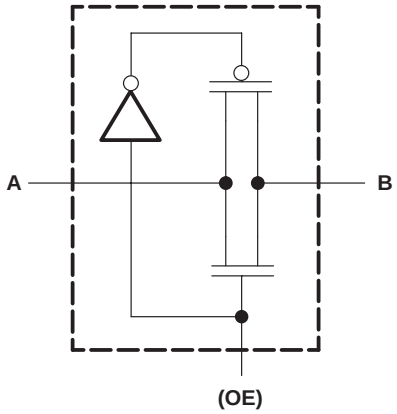

absolute maximum ratings over operating free-air temperature range (unless otherwise noted)†

Supply voltage range, V_{CC} . . . . . −0.5 V to 4.6 V
Input voltage range, V_I (see Note 1) . . . . . −0.5 V to 4.6 V
Continuous channel current . . . . . 128 mA
Input clamp current, I_{IK} (V_I < 0) . . . . . −50 mA
Package thermal impedance, θ_{JA} (see Note 2): DGG package . . . . . 64°C/W
DGV package . . . . . 48°C/W
DL package . . . . . 56°C/W
Storage temperature range, T_{stg} . . . . . −65°C to 150°C

† Stresses beyond those listed under “absolute maximum ratings” may cause permanent damage to the device. These are stress ratings only, and functional operation of the device at these or any other conditions beyond those indicated under “recommended operating conditions” is not implied. Exposure to absolute-maximum-rated conditions for extended periods may affect device reliability.

NOTES: 1. The input and output negative-voltage ratings may be exceeded if the input and output clamp-current ratings are observed.
2. The package thermal impedance is calculated in accordance with JESD 51-7.

recommended operating conditions (see Note 3)

			MIN	MAX	UNIT
V_{CC}	Supply voltage		2.3	3.6	V
V_{IH}	High-level control input voltage	V_{CC} = 2.3 V to 2.7 V	1.7		V
		V_{CC} = 2.7 V to 3.6 V	2		
V_{IL}	Low-level control input voltage	V_{CC} = 2.3 V to 2.7 V		0.7	V
		V_{CC} = 2.7 V to 3.6 V		0.8	
T_A	Operating free-air temperature		−40	85	°C

NOTE 3: All unused control inputs of the device must be held at V_{CC} or GND to ensure proper device operation. Refer to the TI application report, *Implications of Slow or Floating CMOS Inputs*, literature number SCBA004.

electrical characteristics over recommended operating free-air temperature range (unless otherwise noted)

PARAMETER		TEST CONDITIONS			MIN	TYP†	MAX	UNIT
V_{IK}		V_{CC} = 3 V,	I_I = −18 mA				−1.2	V
I_I		V_{CC} = 3.6 V,	V_I = V_{CC} or GND				±1	µA
I_{off}		V_{CC} = 0,	V_I or V_O = 0 to 3.6 V				10	µA
I_{CC}		V_{CC} = 3.6 V,	I_O = 0,	V_I = V_{CC} or GND			10	µA
ΔI_{CC}‡	Control inputs	V_{CC} = 3.6 V,	One input at 3 V,	Other inputs at V_{CC} or GND			300	µA
C_i	Control inputs	V_I = 3 V or 0				5		pF
$C_{io(OFF)}$		V_O = 3 V or 0,	S_1, S_2, and S_3 = GND			8		pF
r_{on}§		V_{CC} = 2.3 V, TYP at V_{CC} = 2.5 V	V_I = 0	I_I = 64 mA		5	8	Ω
				I_I = 24 mA		5	8	
			V_I = 1.7 V,	I_I = 15 mA		27	40	
		V_{CC} = 3 V	V_I = 0	I_I = 64 mA		5	7	
				I_I = 24 mA		5	7	
			V_I = 2.4 V,	I_I = 15 mA		10	15	

† All typical values are at V_{CC} = 3.3 V (unless otherwise noted), T_A = 25°C.
‡ This is the increase in supply current for each input that is at the specified voltage level, rather than V_{CC} or GND.
§ Measured by the voltage drop between the A and B terminals at the indicated current through the switch. On-state resistance is determined by the lower of the voltages of the two (A or B) terminals.

switching characteristics over recommended operating free-air temperature range (unless otherwise noted) (see Figure 1)

PARAMETER	FROM (INPUT)	TO (OUTPUT)	V_{CC} = 2.5 V ± 0.2 V		V_{CC} = 3.3 V ± 0.3 V		UNIT
			MIN	MAX	MIN	MAX	
t_{pd}¶	A or B	B or A		0.15		0.25	ns
t_{pd}	S	B or A	3	11.1	3	8.8	ns
t_{en}	S	A or B	3	10.9	3	8.6	ns
t_{dis}	S	A or B	1	8.7	2	8.8	ns

¶ The propagation delay is the calculated RC time constant of the typical on-state resistance of the switch and the specified load capacitance, when driven by an ideal voltage source (zero output impedance).

PARAMETER MEASUREMENT INFORMATION

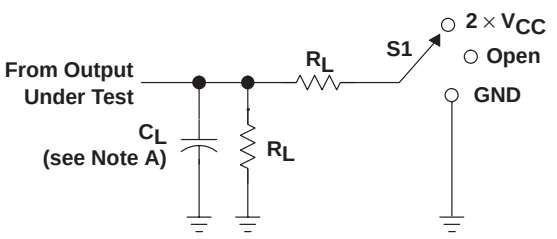

LOAD CIRCUIT

TEST	S1
t_{PLH}/t_{PHL}	Open
t_{PLZ}/t_{PZL}	$2 \times V_{CC}$
t_{PHZ}/t_{PZH}	GND

V_{CC}	C_L	R_L	V_Δ
2.5 V ±0.2 V	30 pF	500 Ω	0.15 V
3.3 V ±0.3 V	50 pF	500 Ω	0.3 V

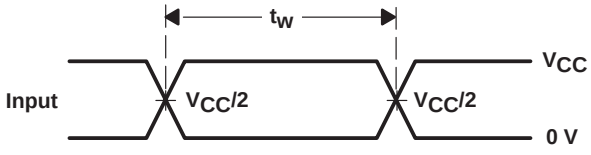

VOLTAGE WAVEFORMS
PULSE DURATION

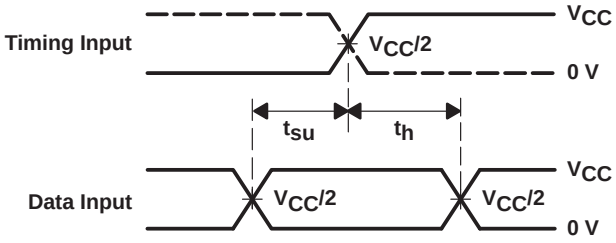

VOLTAGE WAVEFORMS
SETUP AND HOLD TIMES

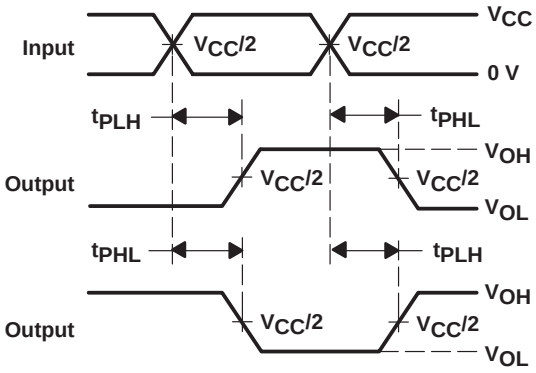

VOLTAGE WAVEFORMS
PROPAGATION DELAY TIMES
INVERTING AND NONINVERTING OUTPUTS

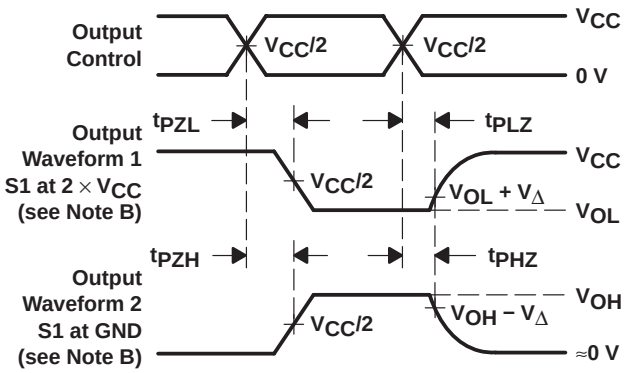

VOLTAGE WAVEFORMS
ENABLE AND DISABLE TIMES
LOW- AND HIGH-LEVEL ENABLING

NOTES: A. C_L includes probe and jig capacitance.
B. Waveform 1 is for an output with internal conditions such that the output is low except when disabled by the output control. Waveform 2 is for an output with internal conditions such that the output is high except when disabled by the output control.
C. All input pulses are supplied by generators having the following characteristics: PRR ≤ 10 MHz, Z_O = 50 Ω, t_r ≤ 2 ns, t_f ≤ 2 ns.
D. The outputs are measured one at a time with one transition per measurement.
E. t_{PLZ} and t_{PHZ} are the same as t_{dis}.
F. t_{PZL} and t_{PZH} are the same as t_{en}.
G. t_{PLH} and t_{PHL} are the same as t_{pd}.
H. All parameters and waveforms are not applicable to all devices.

Figure 1. Load Circuit and Voltage Waveforms

PACKAGING INFORMATION

Orderable part number	Status (1)	Material type (2)	Package | Pins	Package qty | Carrier	RoHS (3)	Lead finish/ Ball material (4)	MSL rating/ Peak reflow (5)	Op temp (°C)	Part marking (6)
SN74CBTLV16212DL	Active	Production	SSOP (DL) | 56	20 | TUBE	Yes	NIPDAU	Level-1-260C-UNLIM	-40 to 85	CBTLV16212
SN74CBTLV16212DL.B	Active	Production	SSOP (DL) | 56	20 | TUBE	Yes	NIPDAU	Level-1-260C-UNLIM	-40 to 85	CBTLV16212
SN74CBTLV16212DLR	Active	Production	SSOP (DL) | 56	1000 | LARGE T&R	Yes	NIPDAU	Level-1-260C-UNLIM	-40 to 85	CBTLV16212
SN74CBTLV16212DLR.B	Active	Production	SSOP (DL) | 56	1000 | LARGE T&R	Yes	NIPDAU	Level-1-260C-UNLIM	-40 to 85	CBTLV16212
SN74CBTLV16212GR	Active	Production	TSSOP (DGG) | 56	2000 | LARGE T&R	Yes	NIPDAU	Level-1-260C-UNLIM	-40 to 85	CBTLV16212
SN74CBTLV16212GR.B	Active	Production	TSSOP (DGG) | 56	2000 | LARGE T&R	Yes	NIPDAU	Level-1-260C-UNLIM	-40 to 85	CBTLV16212
SN74CBTLV16212GRG4	Active	Production	TSSOP (DGG) | 56	2000 | LARGE T&R	Yes	NIPDAU	Level-1-260C-UNLIM	-40 to 85	CBTLV16212
SN74CBTLV16212GRG4.B	Active	Production	TSSOP (DGG) | 56	2000 | LARGE T&R	Yes	NIPDAU	Level-1-260C-UNLIM	-40 to 85	CBTLV16212
SN74CBTLV16212VR	Active	Production	TVSOP (DGV) | 56	2000 | LARGE T&R	Yes	NIPDAU	Level-1-260C-UNLIM	-40 to 85	CN212
SN74CBTLV16212VR.B	Active	Production	TVSOP (DGV) | 56	2000 | LARGE T&R	Yes	NIPDAU	Level-1-260C-UNLIM	-40 to 85	CN212

(1) **Status:** For more details on status, see our product life cycle.

(2) **Material type:** When designated, preproduction parts are prototypes/experimental devices, and are not yet approved or released for full production. Testing and final process, including without limitation quality assurance, reliability performance testing, and/or process qualification, may not yet be complete, and this item is subject to further changes or possible discontinuation. If available for ordering, purchases will be subject to an additional waiver at checkout, and are intended for early internal evaluation purposes only. These items are sold without warranties of any kind.

(3) **RoHS values:** Yes, No, RoHS Exempt. See the TI RoHS Statement for additional information and value definition.

(4) **Lead finish/Ball material:** Parts may have multiple material finish options. Finish options are separated by a vertical ruled line. Lead finish/Ball material values may wrap to two lines if the finish value exceeds the maximum column width.

(5) **MSL rating/Peak reflow:** The moisture sensitivity level ratings and peak solder (reflow) temperatures. In the event that a part has multiple moisture sensitivity ratings, only the lowest level per JEDEC standards is shown. Refer to the shipping label for the actual reflow temperature that will be used to mount the part to the printed circuit board.

(6) **Part marking:** There may be an additional marking, which relates to the logo, the lot trace code information, or the environmental category of the part.

Multiple part markings will be inside parentheses. Only one part marking contained in parentheses and separated by a "~" will appear on a part. If a line is indented then it is a continuation of the previous line and the two combined represent the entire part marking for that device.

Important Information and Disclaimer: The information provided on this page represents TI's knowledge and belief as of the date that it is provided. TI bases its knowledge and belief on information provided by third parties, and makes no representation or warranty as to the accuracy of such information. Efforts are underway to better integrate information from third parties. TI has taken and continues to take reasonable steps to provide representative

and accurate information but may not have conducted destructive testing or chemical analysis on incoming materials and chemicals. TI and TI suppliers consider certain information to be proprietary, and thus CAS numbers and other limited information may not be available for release.

In no event shall TI's liability arising out of such information exceed the total purchase price of the TI part(s) at issue in this document sold by TI to Customer on an annual basis.

TAPE AND REEL INFORMATION

REEL DIMENSIONS

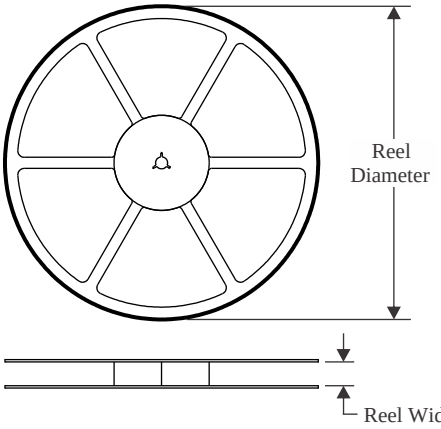

TAPE DIMENSIONS

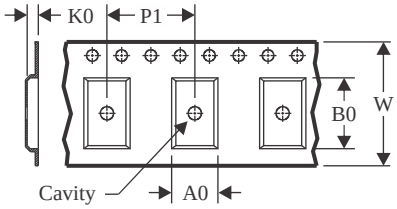

A0	Dimension designed to accommodate the component width
B0	Dimension designed to accommodate the component length
K0	Dimension designed to accommodate the component thickness
W	Overall width of the carrier tape
P1	Pitch between successive cavity centers

QUADRANT ASSIGNMENTS FOR PIN 1 ORIENTATION IN TAPE

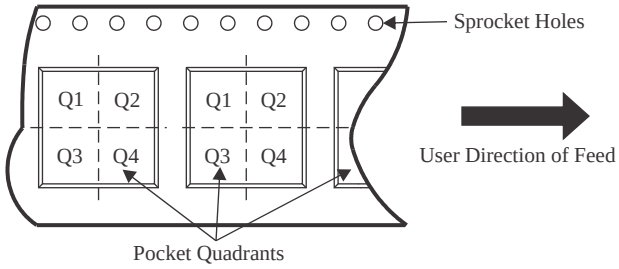

*All dimensions are nominal

Device	Package Type	Package Drawing	Pins	SPQ	Reel Diameter (mm)	Reel Width W1 (mm)	A0 (mm)	B0 (mm)	K0 (mm)	P1 (mm)	W (mm)	Pin1 Quadrant
SN74CBTLV16212DLR	SSOP	DL	56	1000	330.0	32.4	11.35	18.67	3.1	16.0	32.0	Q1
SN74CBTLV16212GR	TSSOP	DGG	56	2000	330.0	24.4	8.9	14.7	1.4	12.0	24.0	Q1
SN74CBTLV16212GRG4	TSSOP	DGG	56	2000	330.0	24.4	8.9	14.7	1.4	12.0	24.0	Q1
SN74CBTLV16212VR	TVSOP	DGV	56	2000	330.0	24.4	6.8	11.7	1.6	12.0	24.0	Q1

TAPE AND REEL BOX DIMENSIONS

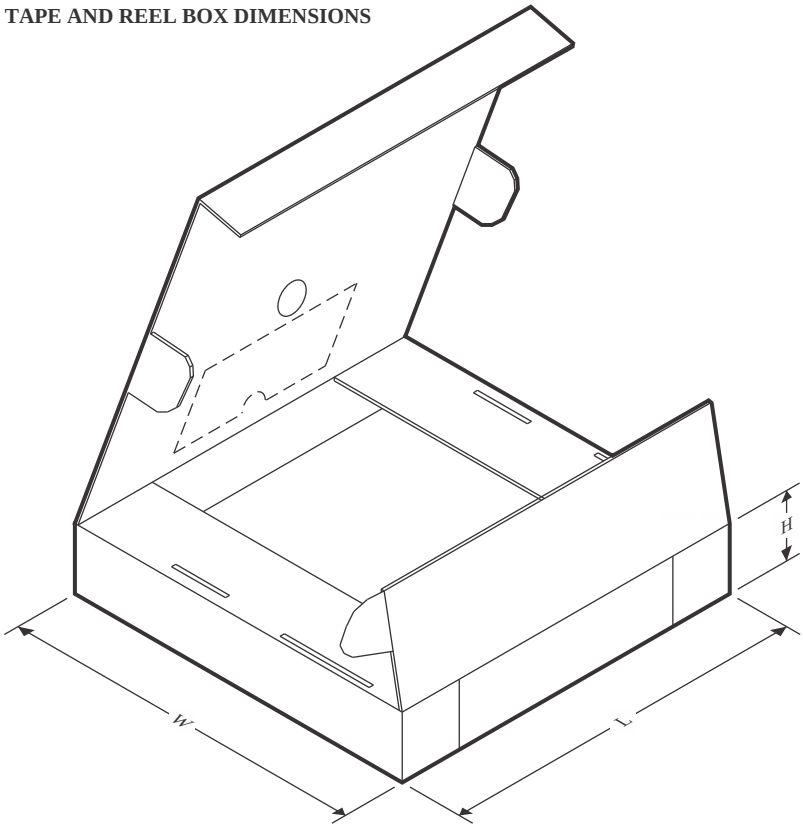

*All dimensions are nominal

Device	Package Type	Package Drawing	Pins	SPQ	Length (mm)	Width (mm)	Height (mm)
SN74CBTLV16212DLR	SSOP	DL	56	1000	356.0	356.0	53.0
SN74CBTLV16212GR	TSSOP	DGG	56	2000	356.0	356.0	45.0
SN74CBTLV16212GRG4	TSSOP	DGG	56	2000	356.0	356.0	45.0
SN74CBTLV16212VR	TVSOP	DGV	56	2000	356.0	356.0	45.0

TUBE

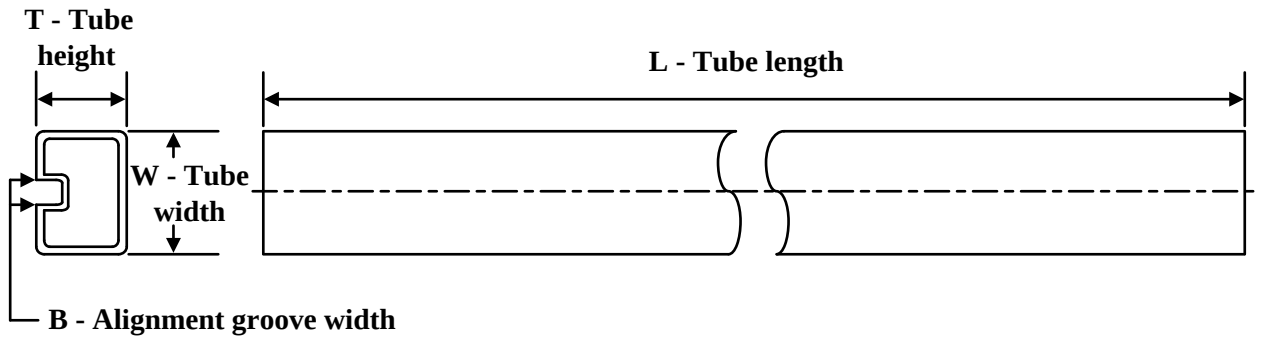

*All dimensions are nominal

Device	Package Name	Package Type	Pins	SPQ	L (mm)	W (mm)	T (µm)	B (mm)
SN74CBTLV16212DL	DL	SSOP	56	20	473.7	14.24	5110	7.87
SN74CBTLV16212DL.B	DL	SSOP	56	20	473.7	14.24	5110	7.87

DGV (R-PDSO-G)** **PLASTIC SMALL-OUTLINE**

24 PINS SHOWN

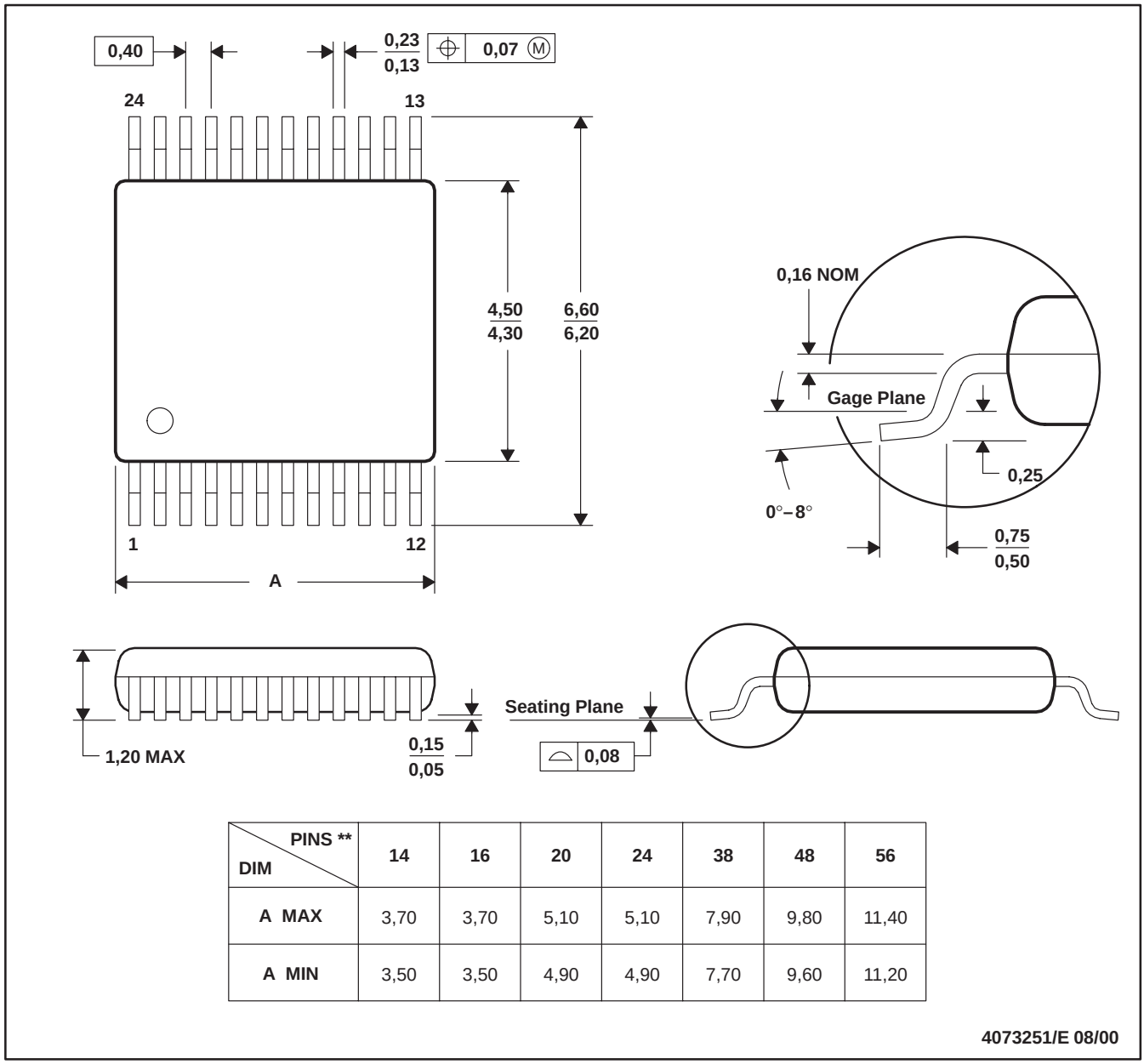

DIM \ PINS **	14	16	20	24	38	48	56
A MAX	3,70	3,70	5,10	5,10	7,90	9,80	11,40
A MIN	3,50	3,50	4,90	4,90	7,70	9,60	11,20

4073251/E 08/00

NOTES: A. All linear dimensions are in millimeters.
B. This drawing is subject to change without notice.
C. Body dimensions do not include mold flash or protrusion, not to exceed 0,15 per side.
D. Falls within JEDEC: 24/48 Pins – MO-153
14/16/20/56 Pins – MO-194

PACKAGE OUTLINE

DGV0056A

TVSOP - 1.2 mm max height

SMALL OUTLINE PACKAGE

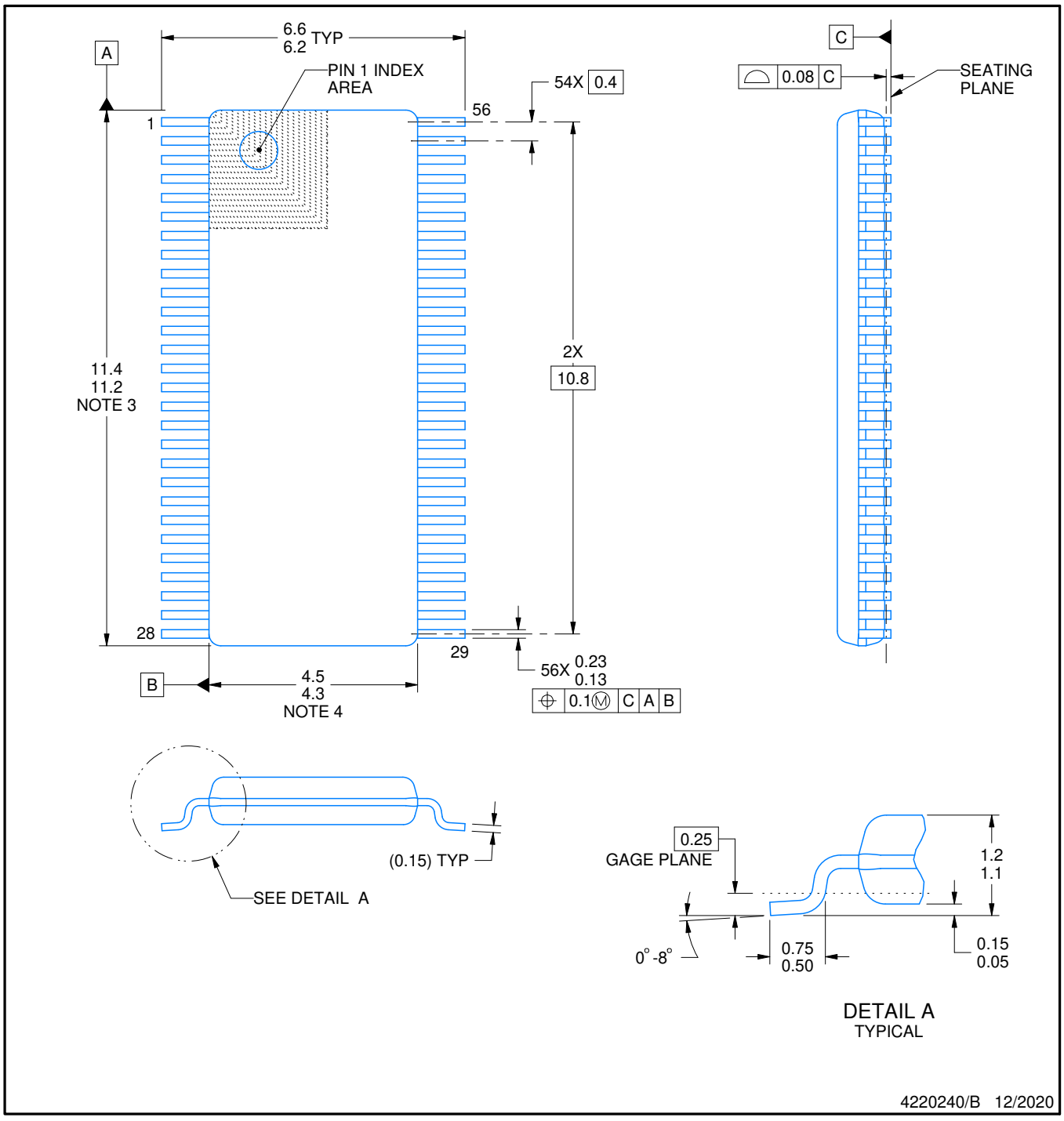

NOTES:

1. All linear dimensions are in millimeters. Any dimensions in parenthesis are for reference only. Dimensioning and tolerancing per ASME Y14.5M.
2. This drawing is subject to change without notice.
3. This dimension does not include mold flash, protrusions, or gate burrs. Mold flash, protrusions, or gate burrs shall not exceed 0.15 mm per side.
4. This dimension does not include interlead flash. Interlead flash shall not exceed 0.25 mm per side.
5. Reference JEDEC registration MO-194.

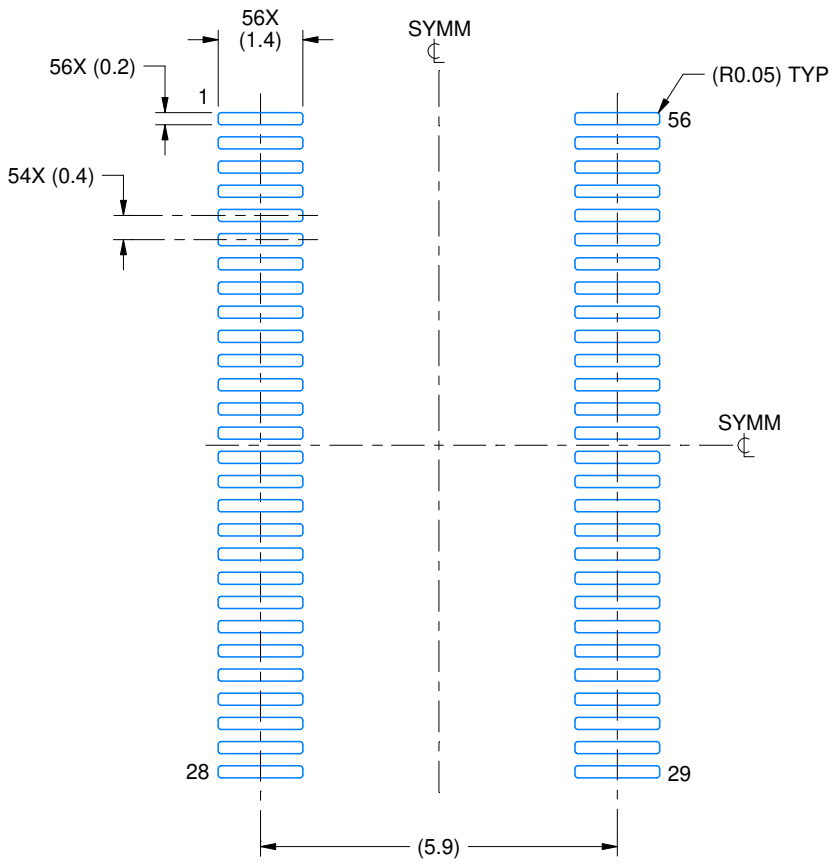

LAND PATTERN EXAMPLE
EXPOSED METAL SHOWN
SCALE: 8X

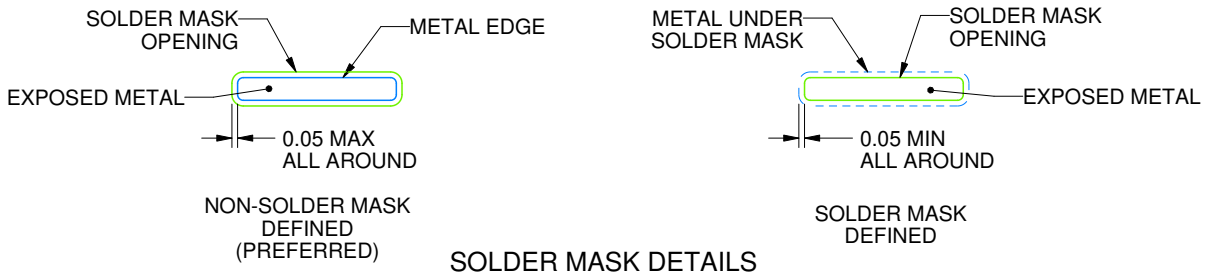

SOLDER MASK DETAILS

4220240/B 12/2020

NOTES: (continued)

6. Publication IPC-7351 may have alternate designs.
7. Solder mask tolerances between and around signal pads can vary based on board fabrication site.

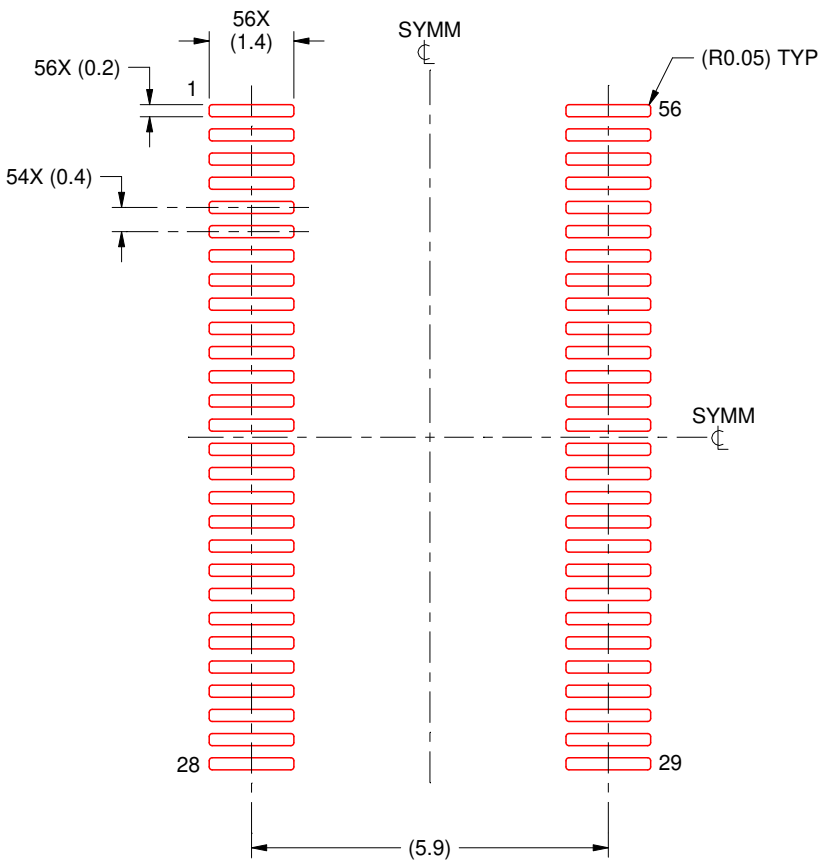

SOLDER PASTE EXAMPLE
BASED ON 0.125 mm THICK STENCIL
SCALE: 8X

4220240/B 12/2020

NOTES: (continued)

8. Laser cutting apertures with trapezoidal walls and rounded corners may offer better paste release. IPC-7525 may have alternate design recommendations.
9. Board assembly site may have different recommendations for stencil design.

DL (R–PDSO–G56) PLASTIC SMALL–OUTLINE PACKAGE

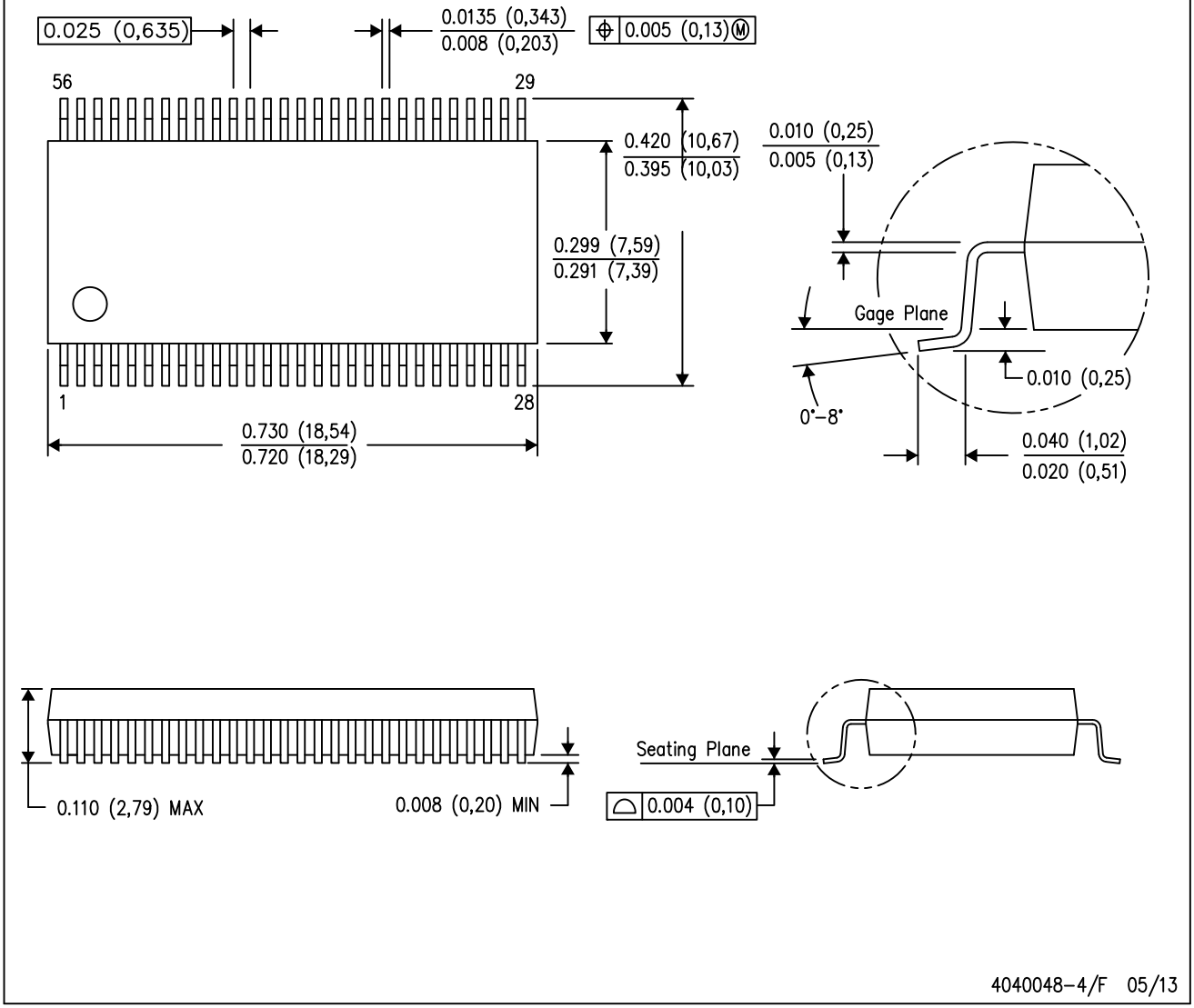

NOTES:
A. All linear dimensions are in inches (millimeters).
B. This drawing is subject to change without notice.
C. Body dimensions do not include mold flash or protrusion not to exceed 0.006 (0,15).
D. Falls within JEDEC MO–118

PowerPAD is a trademark of Texas Instruments.

PACKAGE OUTLINE

DGG0056A

TSSOP - 1.2 mm max height

SMALL OUTLINE PACKAGE

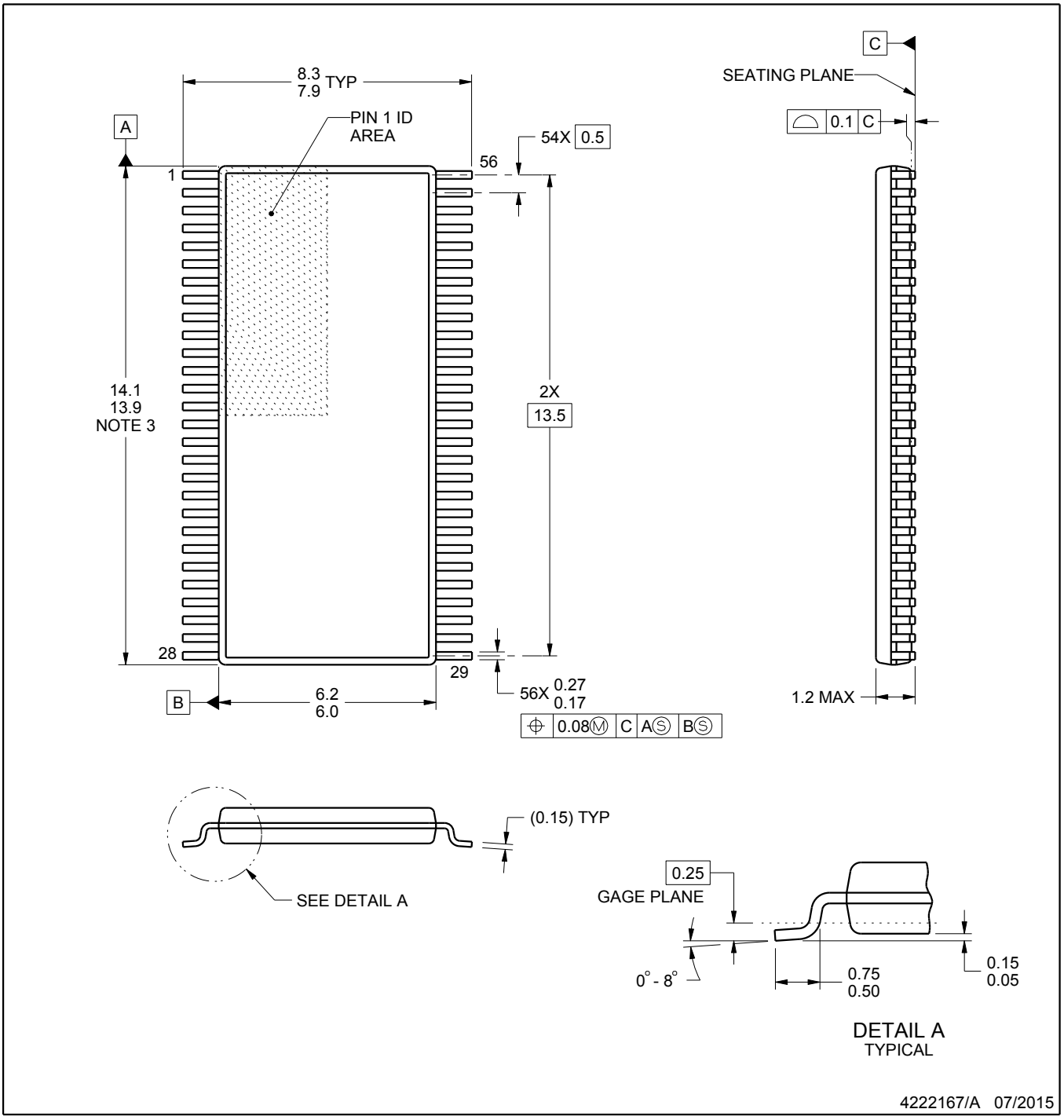

NOTES:

1. All linear dimensions are in millimeters. Any dimensions in parenthesis are for reference only. Dimensioning and tolerancing per ASME Y14.5M.
2. This drawing is subject to change without notice.
3. This dimension does not include mold flash, protrusions, or gate burrs. Mold flash, protrusions, or gate burrs shall not exceed 0.15 mm per side.
4. Reference JEDEC registration MO-153.

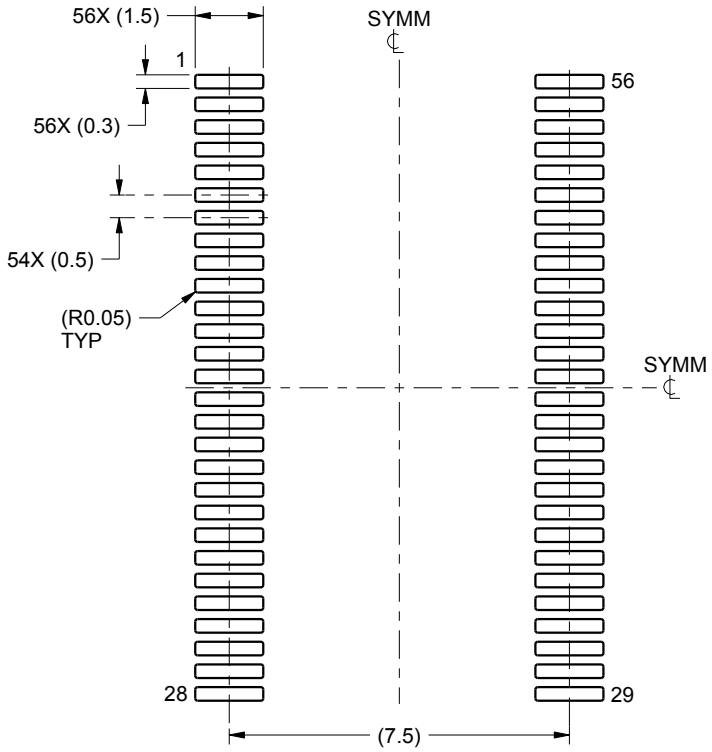

LAND PATTERN EXAMPLE
SCALE:6X

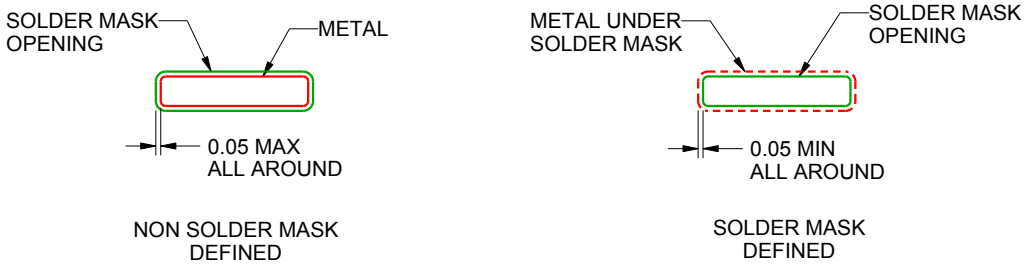

SOLDER MASK DETAILS

4222167/A 07/2015

NOTES: (continued)

5. Publication IPC-7351 may have alternate designs.
6. Solder mask tolerances between and around signal pads can vary based on board fabrication site.

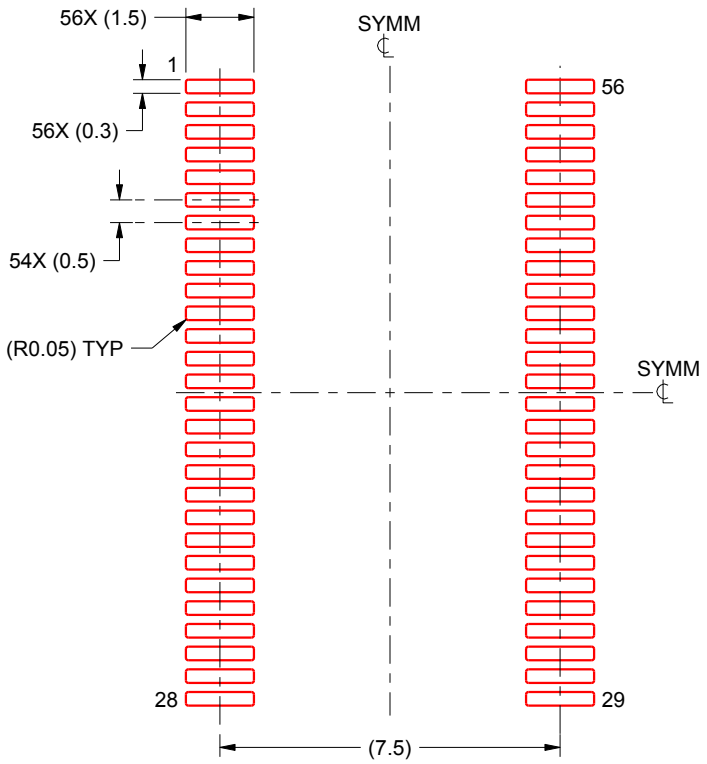

SOLDER PASTE EXAMPLE
BASED ON 0.125 mm THICK STENCIL
SCALE:6X

4222167/A 07/2015

NOTES: (continued)

7. Laser cutting apertures with trapezoidal walls and rounded corners may offer better paste release. IPC-7525 may have alternate design recommendations.
8. Board assembly site may have different recommendations for stencil design.

IMPORTANT NOTICE AND DISCLAIMER

TI PROVIDES TECHNICAL AND RELIABILITY DATA (INCLUDING DATASHEETS), DESIGN RESOURCES (INCLUDING REFERENCE DESIGNS), APPLICATION OR OTHER DESIGN ADVICE, WEB TOOLS, SAFETY INFORMATION, AND OTHER RESOURCES “AS IS” AND WITH ALL FAULTS, AND DISCLAIMS ALL WARRANTIES, EXPRESS AND IMPLIED, INCLUDING WITHOUT LIMITATION ANY IMPLIED WARRANTIES OF MERCHANTABILITY, FITNESS FOR A PARTICULAR PURPOSE OR NON-INFRINGEMENT OF THIRD PARTY INTELLECTUAL PROPERTY RIGHTS.

These resources are intended for skilled developers designing with TI products. You are solely responsible for (1) selecting the appropriate TI products for your application, (2) designing, validating and testing your application, and (3) ensuring your application meets applicable standards, and any other safety, security, regulatory or other requirements.

These resources are subject to change without notice. TI grants you permission to use these resources only for development of an application that uses the TI products described in the resource. Other reproduction and display of these resources is prohibited. No license is granted to any other TI intellectual property right or to any third party intellectual property right. TI disclaims responsibility for, and you fully indemnify TI and its representatives against any claims, damages, costs, losses, and liabilities arising out of your use of these resources.

TI’s products are provided subject to TI’s Terms of Sale, TI’s General Quality Guidelines, or other applicable terms available either on ti.com or provided in conjunction with such TI products. TI’s provision of these resources does not expand or otherwise alter TI’s applicable warranties or warranty disclaimers for TI products. Unless TI explicitly designates a product as custom or customer-specified, TI products are standard, catalog, general purpose devices.

TI objects to and rejects any additional or different terms you may propose.

Copyright © 2026, Texas Instruments Incorporated

Last updated 10/2025