TYPE	TYPICAL POWER DISSIPATION	TYPICAL DELAY (4-BIT WORDS)
'85	275 mW	23 ns
'LS85	52 mW	24 ns
'S85	365 mW	11 ns

SN5485, SN54LS85, SN54S85 . . . J OR W PACKAGE
SN7485 . . . N PACKAGE
SN74LS85, SN74S85 . . . D OR N PACKAGE
(TOP VIEW)

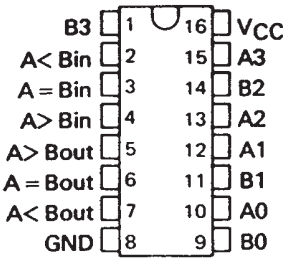

SN54LS85, SN54S85 . . . FK PACKAGE
(TOP VIEW)

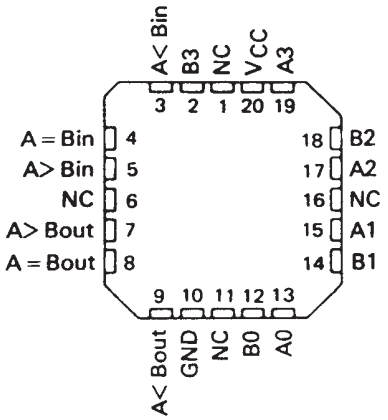

NC - No internal connection

description

These four-bit magnitude comparators perform comparison of straight binary and straight BCD (8-4-2-1) codes. Three fully decoded decisions about two 4-bit words (A, B) are made and are externally available at three outputs. These devices are fully expandable to any number of bits without external gates. Words of greater length may be compared by connecting comparators in cascade. The A > B, A < B, and A = B outputs of a stage handling less-significant bits are connected to the corresponding A > B, A < B, and A = B inputs of the next stage handling more-significant bits. The stage handling the least-significant bits must have a high-level voltage applied to the A = B input. The cascading paths of the '85, 'LS85, and 'S85 are implemented with only a two-gate-level delay to reduce overall comparison times for long words. An alternate method of cascading which further reduces the comparison time is shown in the typical application data.

FUNCTION TABLE

COMPARING INPUTS				CASCADING INPUTS			OUTPUTS		
A3, B3	A2, B2	A1, B1	A0, B0	A > B	A < B	A = B	A > B	A < B	A = B
A3 > B3	X	X	X	X	X	X	H	L	L
A3 < B3	X	X	X	X	X	X	L	H	L
A3 = B3	A2 > B2	X	X	X	X	X	H	L	L
A3 = B3	A2 < B2	X	X	X	X	X	L	H	L
A3 = B2	A2 = B2	A1 > B1	X	X	X	X	H	L	L
A3 = B3	A2 = B2	A1 < B1	X	X	X	X	L	H	L
A2 = B3	A2 = B2	A1 = B1	A0 > B0	X	X	X	H	L	L
A3 = B3	A2 = B2	A1 = B1	A0 < B0	X	X	X	L	H	L
A3 = B3	A2 = B2	A1 = B1	A0 = B0	H	L	L	H	L	L
A3 = B3	A2 = B2	A1 = B1	A0 = B0	L	H	L	L	H	L
A3 = B3	A2 = B2	A1 = B1	A0 = B0	X	X	H	L	L	H
A3 = B3	A2 = B2	A1 = B1	A0 = B0	H	H	L	L	L	L
A3 = B3	A2 = B2	A1 = B1	A0 = B0	L	L	L	H	H	L

PRODUCTION DATA information is current as of publication date. Products conform to specifications per the terms of Texas Instruments standard warranty. Production processing does not necessarily include testing of all parameters.

Copyright © 1988, Texas Instruments Incorporated

logic diagrams (positive logic)

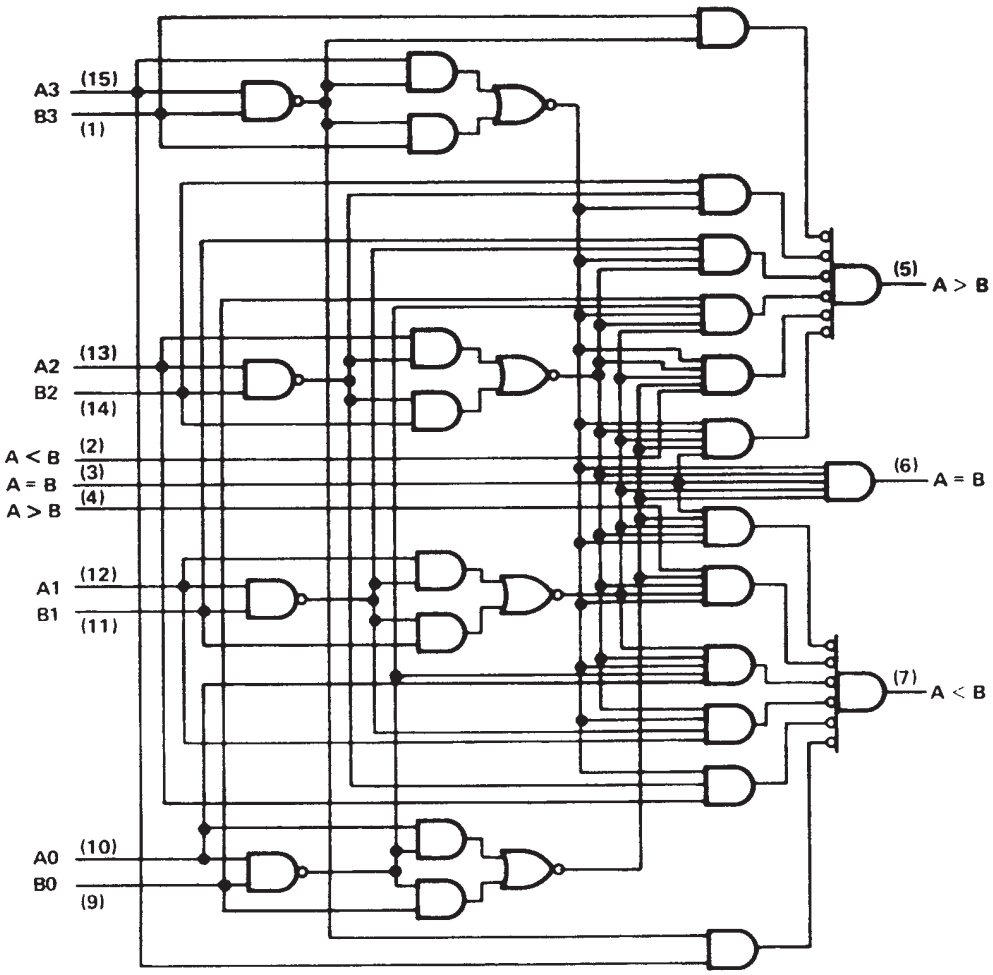

logic symbol†

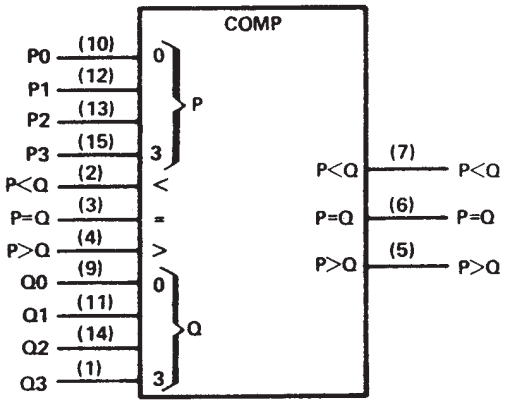

†This symbol is in accordancae with ANSI/IEEE Std 91-1984 and IEC Publication 617-12.
Pin numbers shown are for D, J, N, and W packages.

schematics of inputs and outputs

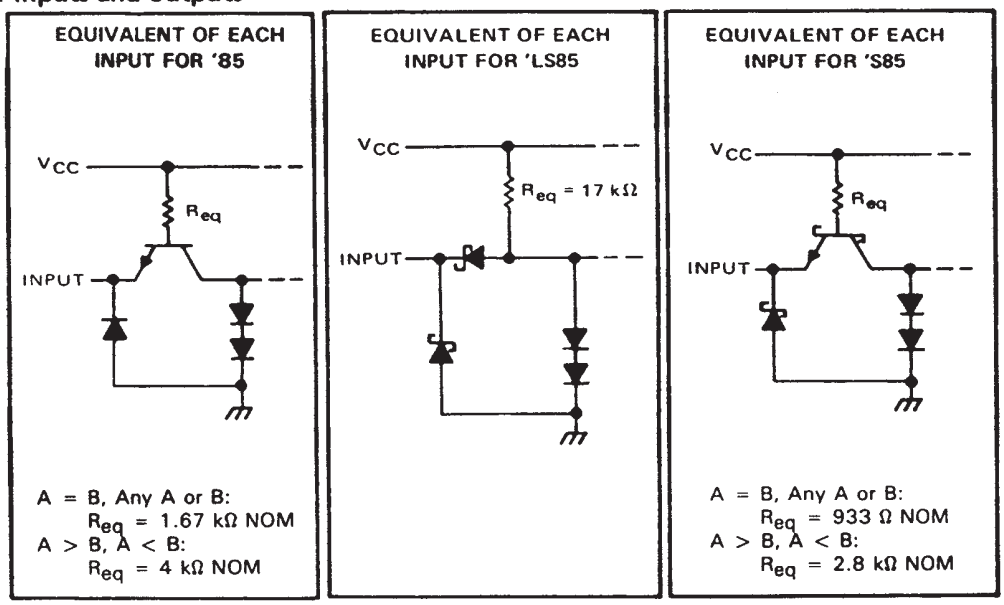

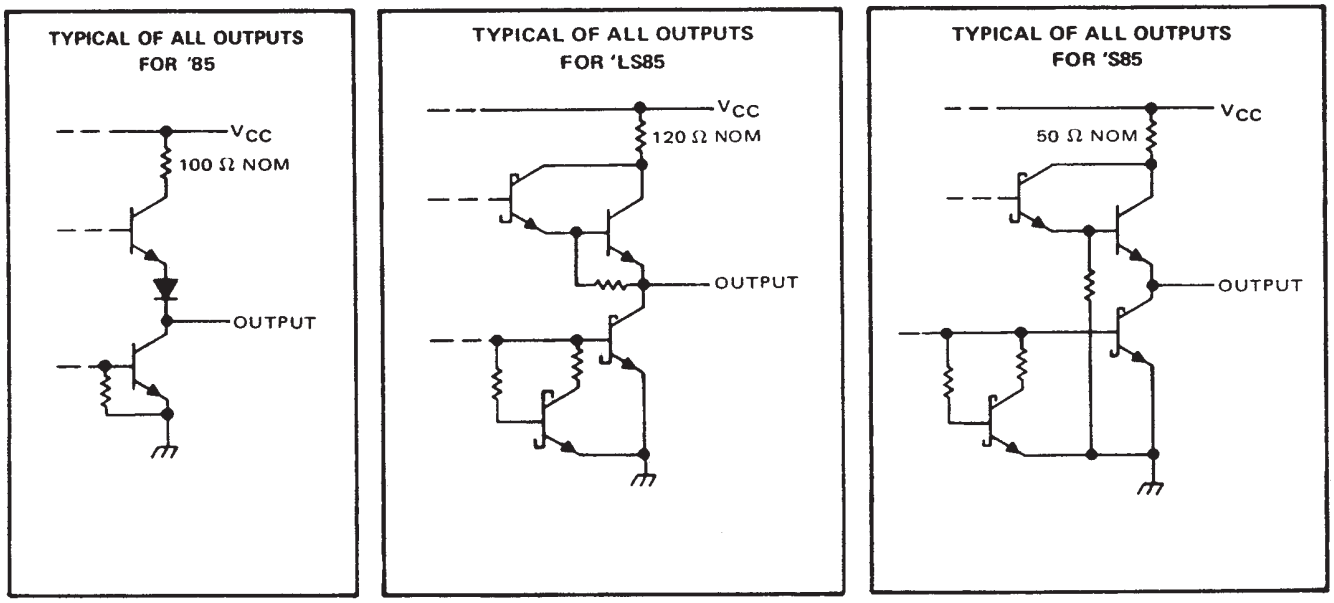

absolute maximum ratings over operating free-air temperature range (unless otherwise noted)

	SN54′ SN54S′	SN54LS′	SN74′ SN74S′	SN74LS′	UNIT
Supply voltage, V_{CC} (see Note 1)	7	7	7	7	V
Input voltage	5.5	7	5.5	7	V
Interemitter voltage (see Note 2)	5.5		5.5		V
Operating free-air temperature range	−55 to 125		−0 to 70		°C
Storage temperature range	−65 to 150		−65 to 150		°C

NOTES: 1. Voltage values, except interemitter voltage, are with respect to network ground terminal.
2. This is the voltage between two emitters of a multiple-emitter input transistor. This rating applies to each A input in conjunction with its respective B input of the '85 and 'S85.

recommended operating conditions

	SN5485			SN7485			UNIT
	MIN	NOM	MAX	MIN	NOM	MAX	
Supply voltage, V_{CC}	4.5	5	5.5	4.75	5	5.25	V
High-level output current, I_{OH}			–400			–400	μA
Low-level output current, I_{OL}			16			16	mA
Operating free-air temperature, T_A	–55		125	0		70	°C

electrical characteristics over recommended operating free-air temperature range (unless otherwise noted)

PARAMETER			TEST CONDITIONS†			MIN	TYP‡	MAX	UNIT
V_{IH}	High-level input voltage					2			V
V_{IL}	Low-level input voltage							0.8	V
V_{IK}	Input clamp voltage		V_{CC} = MIN,	I_I = –12 mA				–1.5	V
V_{OH}	High-level output voltage		V_{CC} = MIN, V_{IL} = 0.8 V,	V_{IH} = 2 V, I_{OH} = –400 μA		2.4	3.4		V
V_{OL}	Low-level output voltage		V_{CC} = MIN, V_{IL} = 0.8 V,	V_{IH} = 2 V, I_{OL} = 16 mA			0.2	0.4	V
I_I	Input current at maximum input voltage		V_{CC} = MAX,	V_I = 5.5 V				1	mA
I_{IH}	High-level input current	A < B, A > B inputs	V_{CC} = MAX,	V_I = 2.4 V				40	μA
		all other inputs						120	
I_{IL}	Low-level input current	A < B, A > B inputs	V_{CC} = MAX,	V_I = 0.4 V				–1.6	mA
		all other inputs						–4.8	
I_{OS}	Short-circuit output current§		V_{CC} = MAX,	V_O = 0	SN5485	–20		–55	mA
					SN7485	–18		–55	
I_{CC}	Supply current		V_{CC} = MAX,	See Note 4			55	88	mA

†For conditions shown as MIN or MAX, use the appropriate value specified under recommended operating conditions.
‡All typical values are at V_{CC} = 5 V, T_A = 25°C.
§Not more than one output should be shorted at a time.
NOTE 4: I_{CC} is measured with outputs open, A = B grounded, and all other inputs at 4.5 V.

switching characteristics, V_{CC} = 5 V, T_A = 25°C

PARAMETER¶	FROM INPUT	TO OUTPUT	NUMBER OF GATE LEVELS	TEST CONDITIONS	MIN	TYP	MAX	UNIT
t_{PLH}	Any A or B data input	A < B, A > B	1	C_L = 15 pF, R_L = 400 Ω, See Note 5		7		ns
			2			12		
			3			17	26	
		A = B	4			23	35	
t_{PHL}	Any A or B data input	A < B, A > B	1			11		ns
			2			15		
			3			20	30	
		A = B	4			20	30	
t_{PLH}	A < B or A = B	A > B	1			7	11	ns
t_{PHL}	A < B or A = B	A > B	1			11	17	ns
t_{PLH}	A = B	A = B	2			13	20	ns
t_{PHL}	A = B	A = B	2			11	17	ns
t_{PLH}	A > B or A = B	A < B	1			7	11	ns
t_{PHL}	A > B or A = B	A < B	1			11	17	ns

¶t_{PLH} = propagation delay time, low-to-high-level output
t_{PHL} = propagation delay time, high-to-low-level output
NOTE 5: Load circuits and voltage waveforms are shown in Section 1.

recommended operating conditions

	SN54LS85			SN74LS85			UNIT
	MIN	NOM	MAX	MIN	NOM	MAX	
Supply voltage, V_{CC}	4.5	5	5.5	4.75	5	5.25	V
High-level output current, I_{OH}			–400			–400	μA
Low-level output current, I_{OL}			4			8	mA
Operating free-air temperature, T_A	–55		125	0		70	°C

electrical characteristics over recommended operating free-air temperature range (unless otherwise noted)

PARAMETER		TEST CONDITIONS†		SN54LS85			SN74LS85			UNIT
				MIN	TYP‡	MAX	MIN	TYP‡	MAX	
V_{IH} High-level input voltage				2			2			V
V_{IL} Low-level input voltage						0.7			0.7	V
V_{IK} Input clamp voltage		V_{CC} = MIN,	I_I = –18 mA			–1.5			–1.5	V
V_{OH} High-level output voltage		V_{CC} = MIN, V_{IL} = V_{IL} max,	V_{IH} = 2 V, I_{OH} = –400 μA	2.5	3.4		2.7	3.4		V
V_{OL} Low-level output voltage		V_{CC} = MIN, V_{IH} = 2 V, V_{IL} = V_{IL} max	I_{OL} = 4 mA		0.25	0.4		0.25	0.4	V
			I_{OL} = 8 mA					0.35	0.5	
I_I Input current at maximum input voltage	A < B, A > B inputs	V_{CC} = MAX,	V_I = 7 V			0.1			0.1	mA
	all other inputs					0.3			0.3	
I_{IH} High-level input current	A < B, A > B inputs	V_{CC} = MAX,	V_I = 2.7 V			20			20	μA
	all other inputs					60			60	
I_{IL} Low-level input current	A < B, A > B inputs	V_{CC} = MAX,	V_I = 0.4 V			–0.4			–0.4	mA
	all other inputs					–1.2			–1.2	
I_{OS} Short-circuit output current§		V_{CC} = MAX		–20		–100	–20		–100	mA
I_{CC} Supply current		V_{CC} = MAX,	See Note 4		10.4	20		10.4	20	mA

† For conditions shown as MIN or MAX, use the appropriate value specified under recommended operating conditions.
‡ All typical values are at V_{CC} = 5 V, T_A = 25°C.
§ Not more than one output should be shorted at a time, and duration of the short-circuit should not exceed one second.
NOTE 4: I_{CC} is measured with outputs open, A = B grounded, and all other inputs at 4.5 V.

switching characteristics, V_{CC} = 5 V, T_A = 25°C

PARAMETER¶	FROM INPUT	TO OUTPUT	NUMBER OF GATE LEVELS	TEST CONDITIONS	MIN	TYP	MAX	UNIT
t_{PLH}	Any A or B data input	A < B, A > B	1	C_L = 15 pF, R_L = 2 kΩ, See Note 5		14		ns
			2			19		
			3			24	36	
		A = B	4			27	45	
t_{PHL}	Any A or B data input	A < B, A > B	1			11		ns
			2			15		
			3			20	30	
		A = B	4			23	45	
t_{PLH}	A < B or A = B	A > B	1			14	22	ns
t_{PHL}	A < B or A = B	A > B	1			11	17	ns
t_{PLH}	A = B	A = B	2			13	20	ns
t_{PHL}	A = B	A = B	2			13	26	ns
t_{PLH}	A > B or A = B	A < B	1			14	22	ns
t_{PHL}	A > B or A = B	A < B	1			11	17	ns

¶ t_{PLH} = propagation delay time, low-to-high-level output
t_{PHL} = propagation delay time, high-to-low-level output
NOTE 5: Load circuits and voltage waveforms are shown in Section 1.

recommended operating conditions

	SN54S85			SN74S85			UNIT
	MIN	NOM	MAX	MIN	NOM	MAX	
Supply voltage, V_{CC}	4.5	5	5.5	4.75	5	5.25	V
High-level output current, I_{OH}			−1			−1	mA
Low-level output current, I_{OL}			20			20	mA
Operating free-air temperature, T_A	−55		125	0		70	°C

electrical characteristics over recommended operating free-air temperature range (unless otherwise noted)

PARAMETER			TEST CONDITIONS†		MIN	TYP‡	MAX	UNIT
V_{IH}	High-level input voltage				2			V
V_{IL}	Low-level input voltage						0.8	V
V_{IK}	Input clamp voltage		V_{CC} = MIN, I_I = −18 mA				−1.2	V
V_{OH}	High-level output voltage		V_{CC} = MIN, V_{IH} = 2 V, V_{IL} = 0.8 V, I_{OH} = −1 mA	SN54S85	2.5	3.4		V
				SN74S85	2.7	3.4		
V_{OL}	Low-level output voltage		V_{CC} = MIN, V_{IH} = 2 V, V_{IL} = 0.8 V, I_{OL} = 20 mA				0.5	V
I_I	Input current at maximum input voltage		V_{CC} = MAX, V_I = 5.5 V				1	mA
I_{IH}	High-level input current	A < B, A > B inputs	V_{CC} = MAX, V_I = 2.7 V				50	μA
		all other inputs					150	
I_{IL}	Low-level input current	A < B, A > B inputs	V_{CC} = MAX, V_I = 0.5 V				−2	mA
		all other inputs					−6	
I_{OS}	Short-circuit output current§		V_{CC} = MAX		−40		−100	mA
I_{CC}	Supply current		V_{CC} = MAX, See Note 4			73	115	mA
			V_{CC} = MAX, T_A = 125°C, See Note 4	SN54S85W			110	

†For conditions shown as MIN or MAX, use the appropriate value specified under recommended operating conditions.
‡All typical values are at V_{CC} = 5 V, T_A = 25°C.
§Not more than one output should be shorted at a time, and duration of the short-circuit should not exceed one second.
NOTE 4: I_{CC} is measured with outputs open, A = B grounded, and all other inputs at 4.5 V.

switching characteristics, V_{CC} = 5 V, T_A = 25°C

PARAMETER¶	FROM INPUT	TO OUTPUT	NUMBER OF GATE LEVELS	TEST CONDITIONS	MIN	TYP	MAX	UNIT
t_{PLH}	Any A or B data input	A < B, A > B	1	C_L = 15 pF, R_L = 280 Ω, See Note 5		5		ns
			2			7.5		
			3			10.5	16	
		A = B	4			12	18	
t_{PHL}	Any A or B data input	A < B, A > B	1			5.5		ns
			2			7		
			3			11	16.5	
		A = B	4			11	16.5	
t_{PLH}	A < B or A = B	A > B	1			5	7.5	ns
t_{PHL}	A < B or A = B	A > B	1			5.5	8.5	ns
t_{PLH}	A = B	A = B	2			7	10.5	ns
t_{PHL}	A = B	A = B	2			5	7.5	ns
t_{PLH}	A > B or A = B	A < B	1			5	7.5	ns
t_{PHL}	A > B or A = B	A < B	1			5.5	8.5	ns

¶t_{PLH} = propagation delay time, low-to-high-level output
t_{PHL} = propagation delay time, high-to-low-level output
NOTE 5: Load circuits and voltage waveforms are shown in Section 1.

TYPICAL APPLICATION DATA

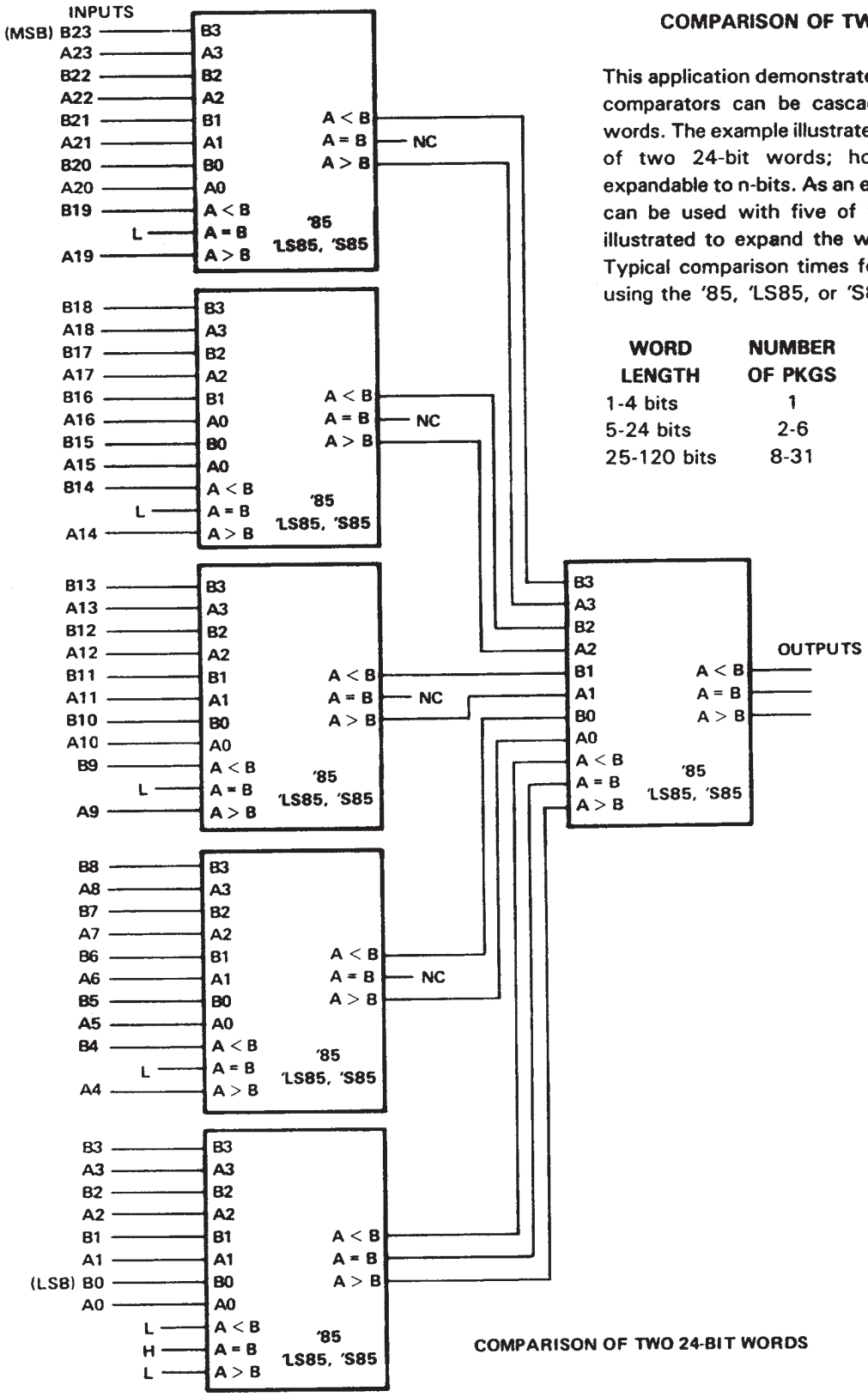

COMPARISON OF TWO 24-BIT WORDS

COMPARISON OF TWO N-BIT WORDS

This application demonstrates how these magnitude comparators can be cascaded to compare longer words. The example illustrated shows the comparison of two 24-bit words; however, the design is expandable to n-bits. As an example, one comparator can be used with five of the 24-bit comparators illustrated to expand the word length to 120-bits. Typical comparison times for various word lengths using the '85, 'LS85, or 'S85 are:

WORD LENGTH	NUMBER OF PKGS	'85	'LS85	'S85
1-4 bits	1	23 ns	24 ns	11 ns
5-24 bits	2-6	46 ns	48 ns	22 ns
25-120 bits	8-31	69 ns	72 ns	33 ns

PACKAGING INFORMATION

Orderable part number	Status (1)	Material type (2)	Package | Pins	Package qty | Carrier	RoHS (3)	Lead finish/ Ball material (4)	MSL rating/ Peak reflow (5)	Op temp (°C)	Part marking (6)
5962-9754701Q2A	Active	Production	LCCC (FK) | 20	55 | TUBE	No	SNPB	N/A for Pkg Type	-55 to 125	5962-9754701Q2A SNJ54LS85FK
5962-9754701QEA	Active	Production	CDIP (J) | 16	25 | TUBE	No	SNPB	N/A for Pkg Type	-55 to 125	5962-9754701QEA SNJ54LS85J
5962-9754701QFA	Active	Production	CFP (W) | 16	25 | TUBE	No	SNPB	N/A for Pkg Type	-55 to 125	5962-9754701QFA SNJ54LS85W
JM38510/08201BEA	Active	Production	CDIP (J) | 16	25 | TUBE	No	SNPB	N/A for Pkg Type	-55 to 125	JM38510/08201BEA
JM38510/08201BEA.A	Active	Production	CDIP (J) | 16	25 | TUBE	No	SNPB	N/A for Pkg Type	-55 to 125	JM38510/08201BEA
JM38510/31101B2A	Active	Production	LCCC (FK) | 20	55 | TUBE	No	SNPB	N/A for Pkg Type	-55 to 125	JM38510/31101B2A
JM38510/31101B2A.A	Active	Production	LCCC (FK) | 20	55 | TUBE	No	SNPB	N/A for Pkg Type	-55 to 125	JM38510/31101B2A
JM38510/31101BEA	Active	Production	CDIP (J) | 16	25 | TUBE	No	SNPB	N/A for Pkg Type	-55 to 125	JM38510/31101BEA
JM38510/31101BEA.A	Active	Production	CDIP (J) | 16	25 | TUBE	No	SNPB	N/A for Pkg Type	-55 to 125	JM38510/31101BEA
JM38510/31101BFA	Active	Production	CFP (W) | 16	25 | TUBE	No	SNPB	N/A for Pkg Type	-55 to 125	JM38510/31101BFA
JM38510/31101BFA.A	Active	Production	CFP (W) | 16	25 | TUBE	No	SNPB	N/A for Pkg Type	-55 to 125	JM38510/31101BFA
M38510/08201BEA	Active	Production	CDIP (J) | 16	25 | TUBE	No	SNPB	N/A for Pkg Type	-55 to 125	JM38510/08201BEA
M38510/31101B2A	Active	Production	LCCC (FK) | 20	55 | TUBE	No	SNPB	N/A for Pkg Type	-55 to 125	JM38510/31101B2A
M38510/31101BEA	Active	Production	CDIP (J) | 16	25 | TUBE	No	SNPB	N/A for Pkg Type	-55 to 125	JM38510/31101BEA
M38510/31101BFA	Active	Production	CFP (W) | 16	25 | TUBE	No	SNPB	N/A for Pkg Type	-55 to 125	JM38510/31101BFA

Orderable part number	Status (1)	Material type (2)	Package | Pins	Package qty | Carrier	RoHS (3)	Lead finish/ Ball material (4)	MSL rating/ Peak reflow (5)	Op temp (°C)	Part marking (6)
SN54LS85J	Active	Production	CDIP (J) | 16	25 | TUBE	No	SNPB	N/A for Pkg Type	-55 to 125	SN54LS85J
SN54LS85J.A	Active	Production	CDIP (J) | 16	25 | TUBE	No	SNPB	N/A for Pkg Type	-55 to 125	SN54LS85J
SN54S85J	Active	Production	CDIP (J) | 16	25 | TUBE	No	SNPB	N/A for Pkg Type	-55 to 125	SN54S85J
SN54S85J.A	Active	Production	CDIP (J) | 16	25 | TUBE	No	SNPB	N/A for Pkg Type	-55 to 125	SN54S85J
SN74LS85D	Obsolete	Production	SOIC (D) | 16	-	-	Call TI	Call TI	0 to 70	LS85
SN74LS85DR	Active	Production	SOIC (D) | 16	2500 | LARGE T&R	Yes	NIPDAU	Level-1-260C-UNLIM	0 to 70	LS85
SN74LS85DR.A	Active	Production	SOIC (D) | 16	2500 | LARGE T&R	Yes	NIPDAU	Level-1-260C-UNLIM	0 to 70	LS85
SN74LS85N	Active	Production	PDIP (N) | 16	25 | TUBE	Yes	NIPDAU	N/A for Pkg Type	0 to 70	SN74LS85N
SN74LS85N.A	Active	Production	PDIP (N) | 16	25 | TUBE	Yes	NIPDAU	N/A for Pkg Type	0 to 70	SN74LS85N
SN74LS85NSR	Active	Production	SOP (NS) | 16	2000 | LARGE T&R	Yes	NIPDAU	Level-1-260C-UNLIM	0 to 70	74LS85
SN74LS85NSR.A	Active	Production	SOP (NS) | 16	2000 | LARGE T&R	Yes	NIPDAU	Level-1-260C-UNLIM	0 to 70	74LS85
SN74S85D	Active	Production	SOIC (D) | 16	40 | TUBE	Yes	NIPDAU	Level-1-260C-UNLIM	0 to 70	S85
SN74S85D.A	Active	Production	SOIC (D) | 16	40 | TUBE	Yes	NIPDAU	Level-1-260C-UNLIM	0 to 70	S85
SN74S85N	Active	Production	PDIP (N) | 16	25 | TUBE	Yes	NIPDAU	N/A for Pkg Type	0 to 70	SN74S85N
SN74S85N.A	Active	Production	PDIP (N) | 16	25 | TUBE	Yes	NIPDAU	N/A for Pkg Type	0 to 70	SN74S85N
SNJ54LS85FK	Active	Production	LCCC (FK) | 20	55 | TUBE	No	SNPB	N/A for Pkg Type	-55 to 125	5962-9754701Q2A SNJ54LS 85FK
SNJ54LS85FK.A	Active	Production	LCCC (FK) | 20	55 | TUBE	No	SNPB	N/A for Pkg Type	-55 to 125	5962-9754701Q2A SNJ54LS 85FK
SNJ54LS85J	Active	Production	CDIP (J) | 16	25 | TUBE	No	SNPB	N/A for Pkg Type	-55 to 125	5962-9754701QE A SNJ54LS85J
SNJ54LS85J.A	Active	Production	CDIP (J) | 16	25 | TUBE	No	SNPB	N/A for Pkg Type	-55 to 125	5962-9754701QE A SNJ54LS85J
SNJ54LS85W	Active	Production	CFP (W) | 16	25 | TUBE	No	SNPB	N/A for Pkg Type	-55 to 125	5962-9754701QF A SNJ54LS85W

Orderable part number	Status (1)	Material type (2)	Package | Pins	Package qty | Carrier	RoHS (3)	Lead finish/ Ball material (4)	MSL rating/ Peak reflow (5)	Op temp (°C)	Part marking (6)
SNJ54LS85W.A	Active	Production	CFP (W) | 16	25 | TUBE	No	SNPB	N/A for Pkg Type	-55 to 125	5962-9754701QF A SNJ54LS85W
SNJ54S85FK	Active	Production	LCCC (FK) | 20	55 | TUBE	No	SNPB	N/A for Pkg Type	-55 to 125	SNJ54S 85FK
SNJ54S85FK.A	Active	Production	LCCC (FK) | 20	55 | TUBE	No	SNPB	N/A for Pkg Type	-55 to 125	SNJ54S 85FK
SNJ54S85J	Active	Production	CDIP (J) | 16	25 | TUBE	No	SNPB	N/A for Pkg Type	-55 to 125	SNJ54S85J
SNJ54S85J.A	Active	Production	CDIP (J) | 16	25 | TUBE	No	SNPB	N/A for Pkg Type	-55 to 125	SNJ54S85J

(1) **Status:** For more details on status, see our product life cycle.

(2) **Material type:** When designated, preproduction parts are prototypes/experimental devices, and are not yet approved or released for full production. Testing and final process, including without limitation quality assurance, reliability performance testing, and/or process qualification, may not yet be complete, and this item is subject to further changes or possible discontinuation. If available for ordering, purchases will be subject to an additional waiver at checkout, and are intended for early internal evaluation purposes only. These items are sold without warranties of any kind.

(3) **RoHS values:** Yes, No, RoHS Exempt. See the TI RoHS Statement for additional information and value definition.

(4) **Lead finish/Ball material:** Parts may have multiple material finish options. Finish options are separated by a vertical ruled line. Lead finish/Ball material values may wrap to two lines if the finish value exceeds the maximum column width.

(5) **MSL rating/Peak reflow:** The moisture sensitivity level ratings and peak solder (reflow) temperatures. In the event that a part has multiple moisture sensitivity ratings, only the lowest level per JEDEC standards is shown. Refer to the shipping label for the actual reflow temperature that will be used to mount the part to the printed circuit board.

(6) **Part marking:** There may be an additional marking, which relates to the logo, the lot trace code information, or the environmental category of the part.

Multiple part markings will be inside parentheses. Only one part marking contained in parentheses and separated by a "~" will appear on a part. If a line is indented then it is a continuation of the previous line and the two combined represent the entire part marking for that device.

Important Information and Disclaimer: The information provided on this page represents TI's knowledge and belief as of the date that it is provided. TI bases its knowledge and belief on information provided by third parties, and makes no representation or warranty as to the accuracy of such information. Efforts are underway to better integrate information from third parties. TI has taken and continues to take reasonable steps to provide representative and accurate information but may not have conducted destructive testing or chemical analysis on incoming materials and chemicals. TI and TI suppliers consider certain information to be proprietary, and thus CAS numbers and other limited information may not be available for release.

In no event shall TI's liability arising out of such information exceed the total purchase price of the TI part(s) at issue in this document sold by TI to Customer on an annual basis.

OTHER QUALIFIED VERSIONS OF SN54LS85, SN54S85, SN74LS85, SN74S85 :

- Catalog : SN74LS85, SN74S85
- Military : SN54LS85, SN54S85

NOTE: Qualified Version Definitions:

- Catalog - TI's standard catalog product
- Military - QML certified for Military and Defense Applications

TAPE AND REEL INFORMATION

REEL DIMENSIONS

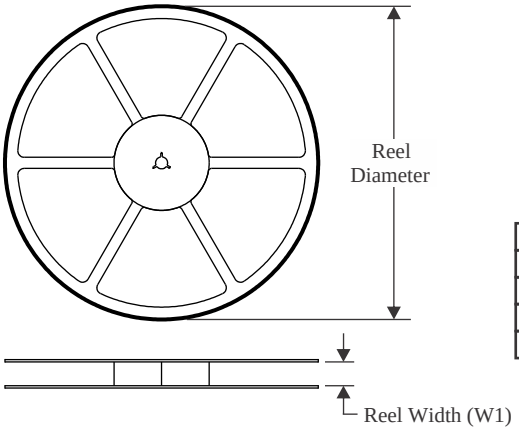

TAPE DIMENSIONS

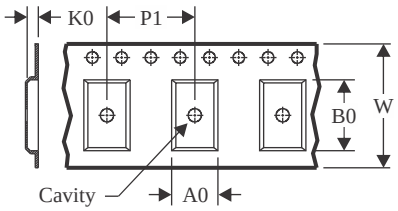

A0	Dimension designed to accommodate the component width
B0	Dimension designed to accommodate the component length
K0	Dimension designed to accommodate the component thickness
W	Overall width of the carrier tape
P1	Pitch between successive cavity centers

QUADRANT ASSIGNMENTS FOR PIN 1 ORIENTATION IN TAPE

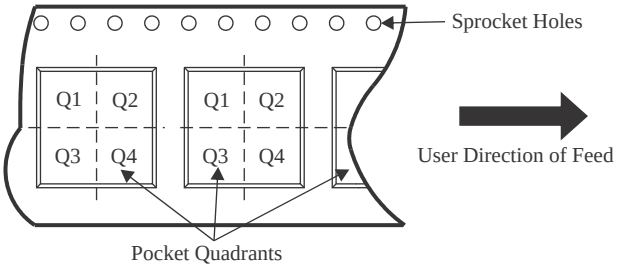

*All dimensions are nominal

Device	Package Type	Package Drawing	Pins	SPQ	Reel Diameter (mm)	Reel Width W1 (mm)	A0 (mm)	B0 (mm)	K0 (mm)	P1 (mm)	W (mm)	Pin1 Quadrant
SN74LS85DR	SOIC	D	16	2500	330.0	16.4	6.5	10.3	2.1	8.0	16.0	Q1
SN74LS85NSR	SOP	NS	16	2000	330.0	16.4	8.1	10.4	2.5	12.0	16.0	Q1

TAPE AND REEL BOX DIMENSIONS

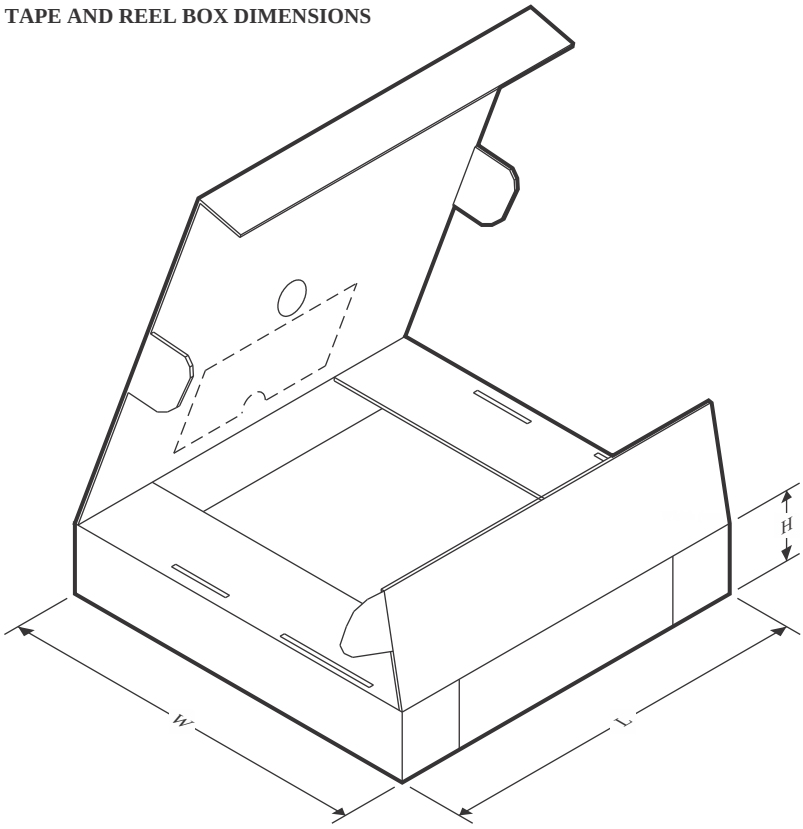

*All dimensions are nominal

Device	Package Type	Package Drawing	Pins	SPQ	Length (mm)	Width (mm)	Height (mm)
SN74LS85DR	SOIC	D	16	2500	340.5	336.1	32.0
SN74LS85NSR	SOP	NS	16	2000	353.0	353.0	32.0

TUBE

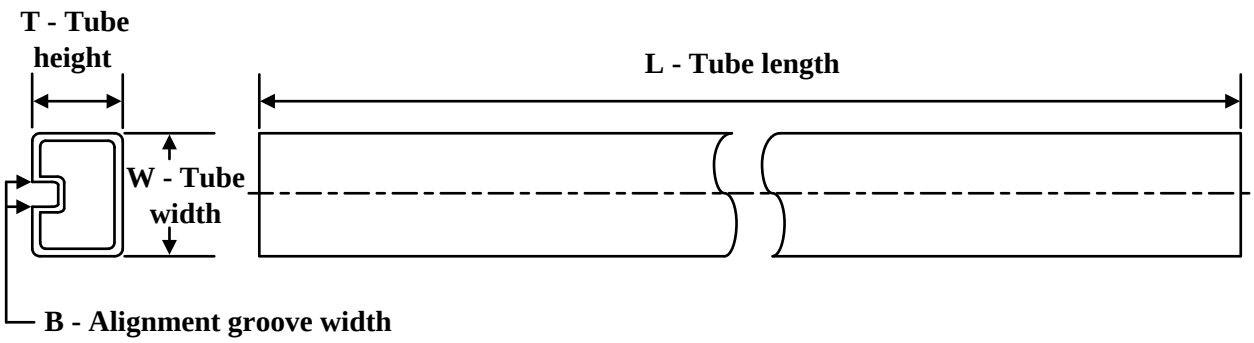

*All dimensions are nominal

Device	Package Name	Package Type	Pins	SPQ	L (mm)	W (mm)	T (µm)	B (mm)
5962-9754701Q2A	FK	LCCC	20	55	506.98	12.06	2030	NA
5962-9754701QFA	W	CFP	16	25	506.98	26.16	6220	NA
JM38510/31101B2A	FK	LCCC	20	55	506.98	12.06	2030	NA
JM38510/31101B2A.A	FK	LCCC	20	55	506.98	12.06	2030	NA
JM38510/31101BFA	W	CFP	16	25	506.98	26.16	6220	NA
JM38510/31101BFA.A	W	CFP	16	25	506.98	26.16	6220	NA
M38510/31101B2A	FK	LCCC	20	55	506.98	12.06	2030	NA
M38510/31101BFA	W	CFP	16	25	506.98	26.16	6220	NA
SN74LS85N	N	PDIP	16	25	506	13.97	11230	4.32
SN74LS85N	N	PDIP	16	25	506	13.97	11230	4.32
SN74LS85N.A	N	PDIP	16	25	506	13.97	11230	4.32
SN74LS85N.A	N	PDIP	16	25	506	13.97	11230	4.32
SN74S85D	D	SOIC	16	40	507	8	3940	4.32
SN74S85D.A	D	SOIC	16	40	507	8	3940	4.32
SN74S85N	N	PDIP	16	25	506	13.97	11230	4.32
SN74S85N	N	PDIP	16	25	506	13.97	11230	4.32
SN74S85N.A	N	PDIP	16	25	506	13.97	11230	4.32
SN74S85N.A	N	PDIP	16	25	506	13.97	11230	4.32
SNJ54LS85FK	FK	LCCC	20	55	506.98	12.06	2030	NA
SNJ54LS85FK.A	FK	LCCC	20	55	506.98	12.06	2030	NA
SNJ54LS85W	W	CFP	16	25	506.98	26.16	6220	NA
SNJ54LS85W.A	W	CFP	16	25	506.98	26.16	6220	NA
SNJ54S85FK	FK	LCCC	20	55	506.98	12.06	2030	NA
SNJ54S85FK.A	FK	LCCC	20	55	506.98	12.06	2030	NA

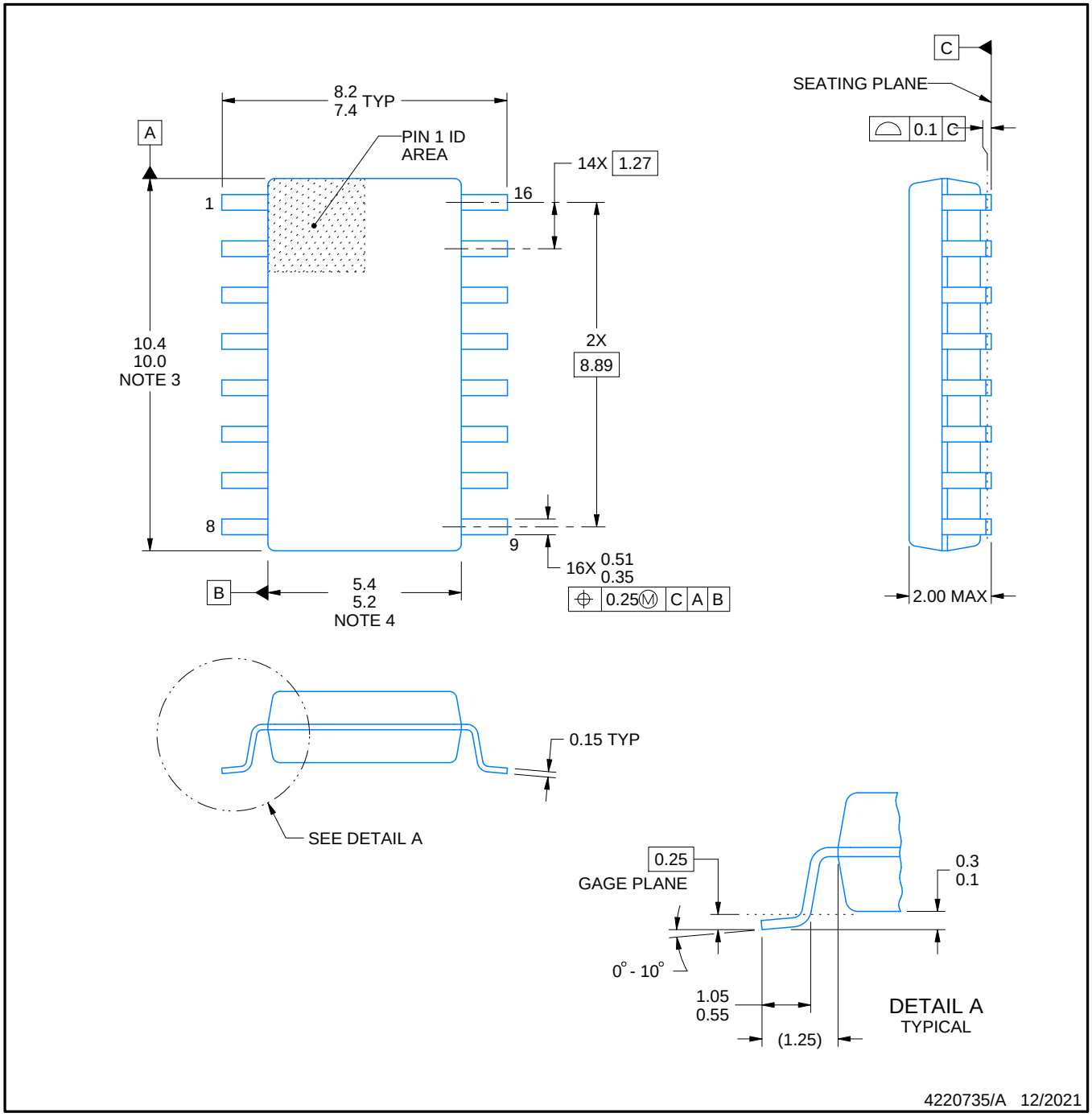

NOTES:

1. All linear dimensions are in millimeters. Dimensions in parenthesis are for reference only. Dimensioning and tolerancing per ASME Y14.5M.
2. This drawing is subject to change without notice.
3. This dimension does not include mold flash, protrusions, or gate burrs. Mold flash, protrusions, or gate burrs shall not exceed 0.15 mm, per side.
4. This dimension does not include interlead flash. Interlead flash shall not exceed 0.25 mm, per side.

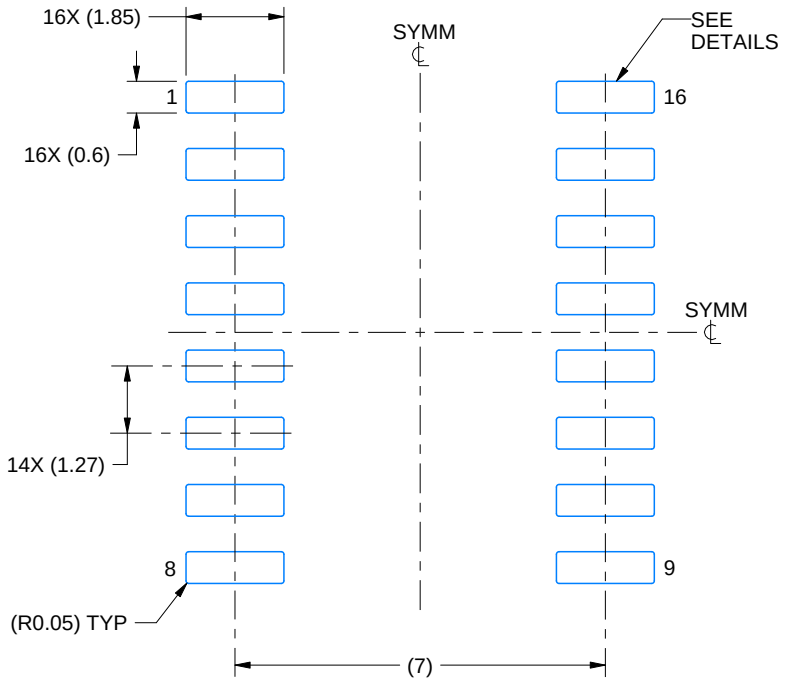

LAND PATTERN EXAMPLE
SCALE:7X

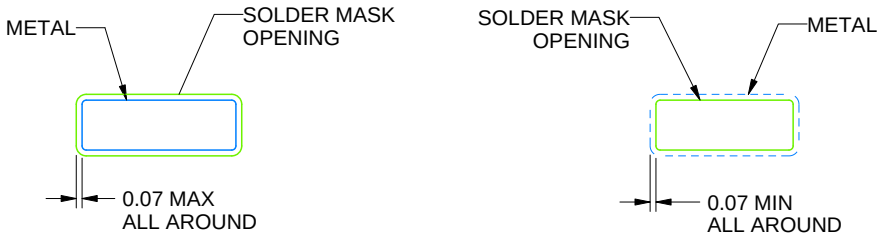

NON SOLDER MASK DEFINED

SOLDER MASK DEFINED

SOLDER MASK DETAILS

4220735/A 12/2021

NOTES: (continued)

5. Publication IPC-7351 may have alternate designs.
6. Solder mask tolerances between and around signal pads can vary based on board fabrication site.

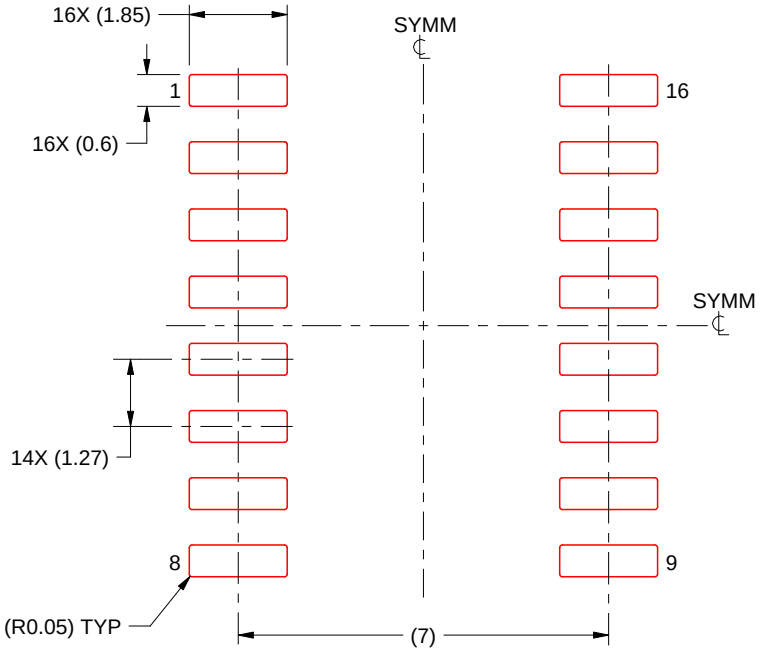

SOLDER PASTE EXAMPLE
BASED ON 0.125 mm THICK STENCIL
SCALE:7X

4220735/A 12/2021

NOTES: (continued)

7. Laser cutting apertures with trapezoidal walls and rounded corners may offer better paste release. IPC-7525 may have alternate design recommendations.
8. Board assembly site may have different recommendations for stencil design.

D (R–PDSO–G16) PLASTIC SMALL OUTLINE

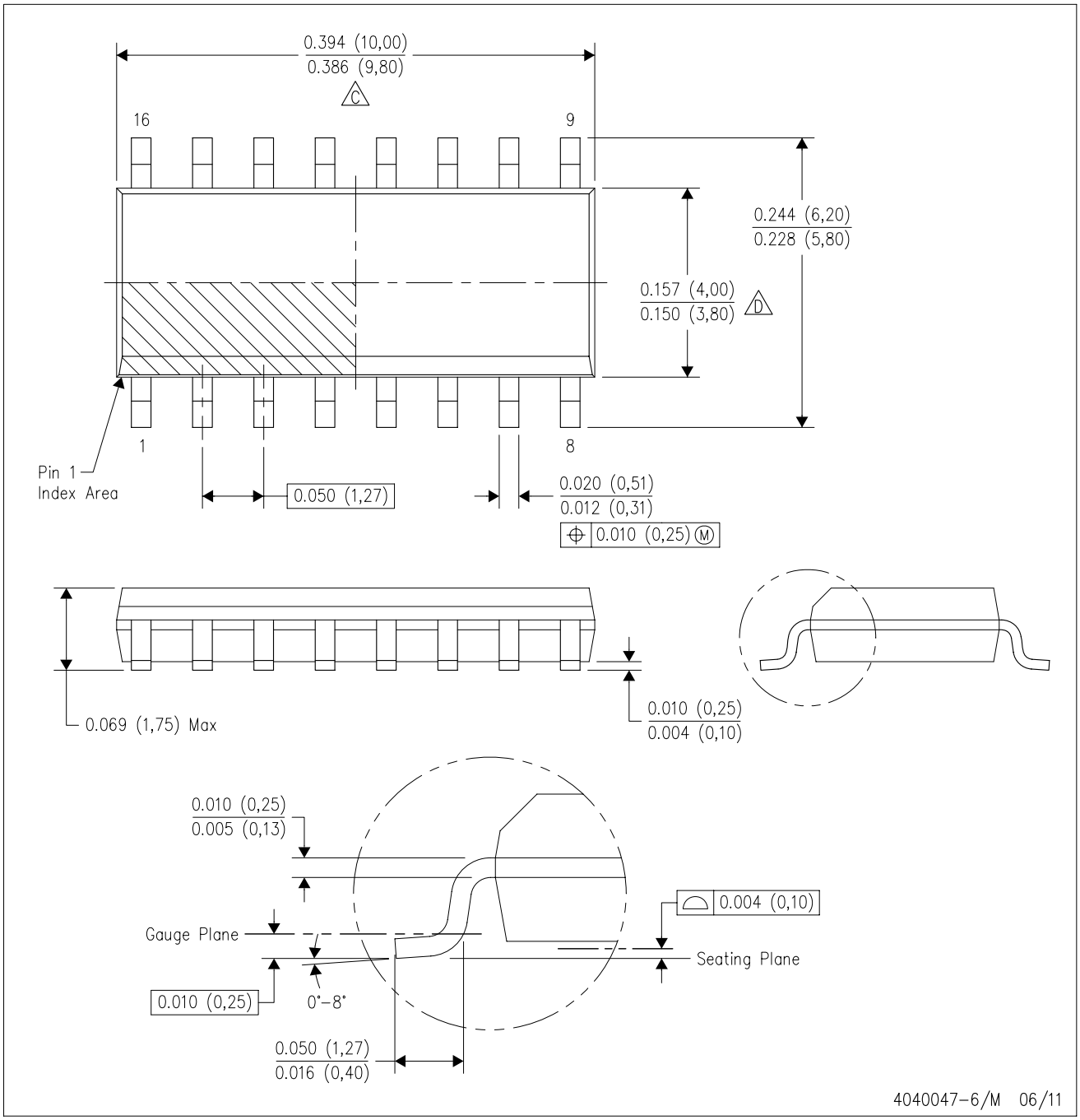

NOTES:
A. All linear dimensions are in inches (millimeters).
B. This drawing is subject to change without notice.
C. Body length does not include mold flash, protrusions, or gate burrs. Mold flash, protrusions, or gate burrs shall not exceed 0.006 (0,15) each side.
D. Body width does not include interlead flash. Interlead flash shall not exceed 0.017 (0,43) each side.
E. Reference JEDEC MS–012 variation AC.

W (R–GDFP–F16) CERAMIC DUAL FLATPACK

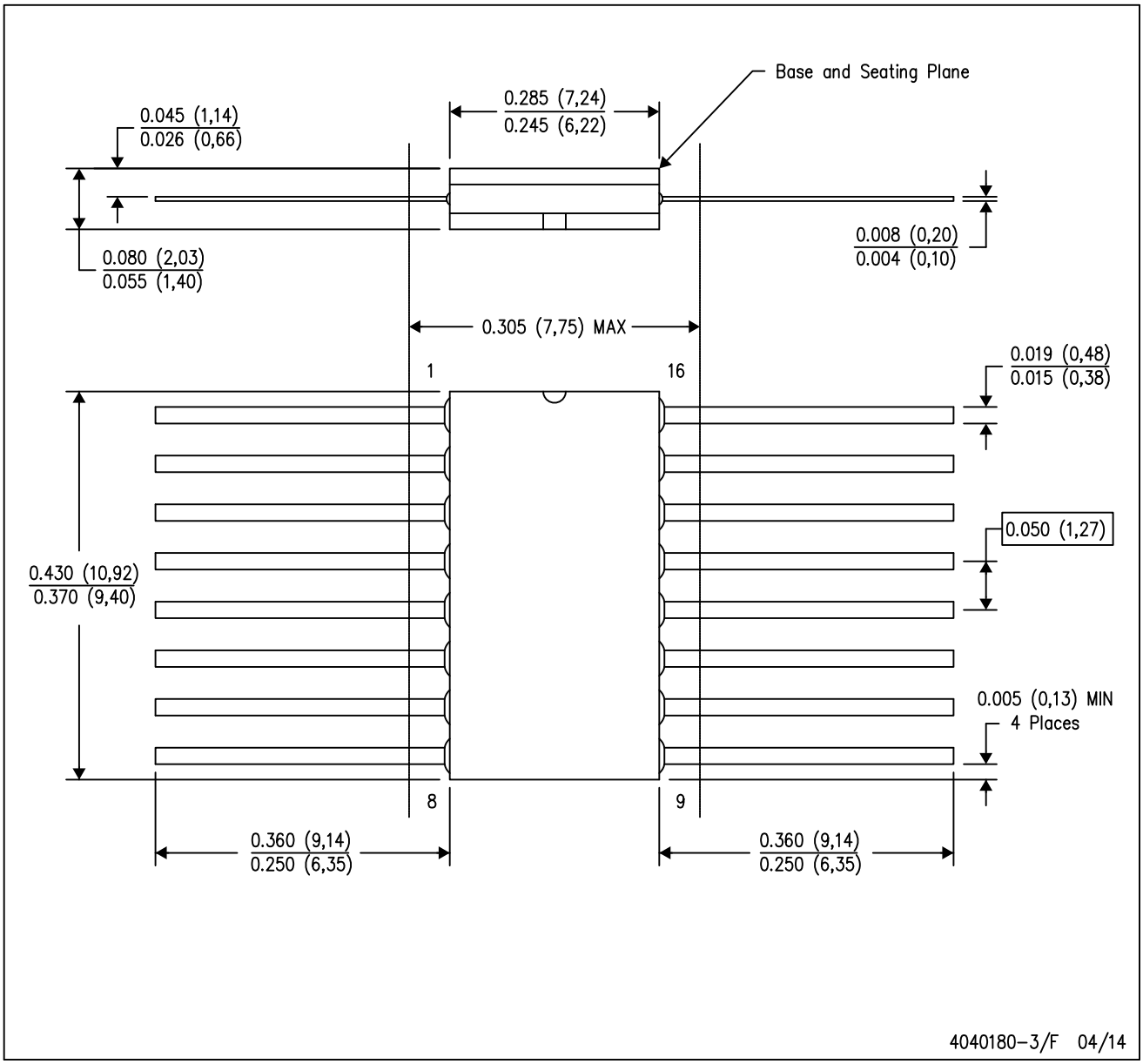

NOTES:
A. All linear dimensions are in inches (millimeters).
B. This drawing is subject to change without notice.
C. This package can be hermetically sealed with a ceramic lid using glass frit.
D. Index point is provided on cap for terminal identification only.
E. Falls within MIL STD 1835 GDFP2–F16

GENERIC PACKAGE VIEW

FK 20

LCCC - 2.03 mm max height

8.89 x 8.89, 1.27 mm pitch

LEADLESS CERAMIC CHIP CARRIER

This image is a representation of the package family, actual package may vary.
Refer to the product data sheet for package details.

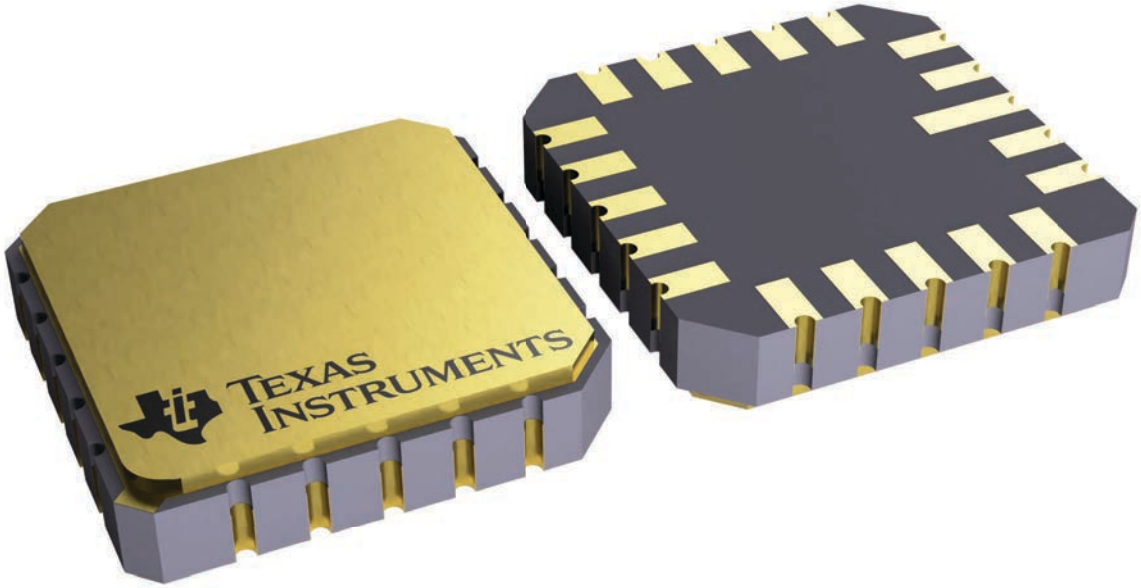

4229370VA\

J (R–GDIP–T**) CERAMIC DUAL IN–LINE PACKAGE

14 LEADS SHOWN

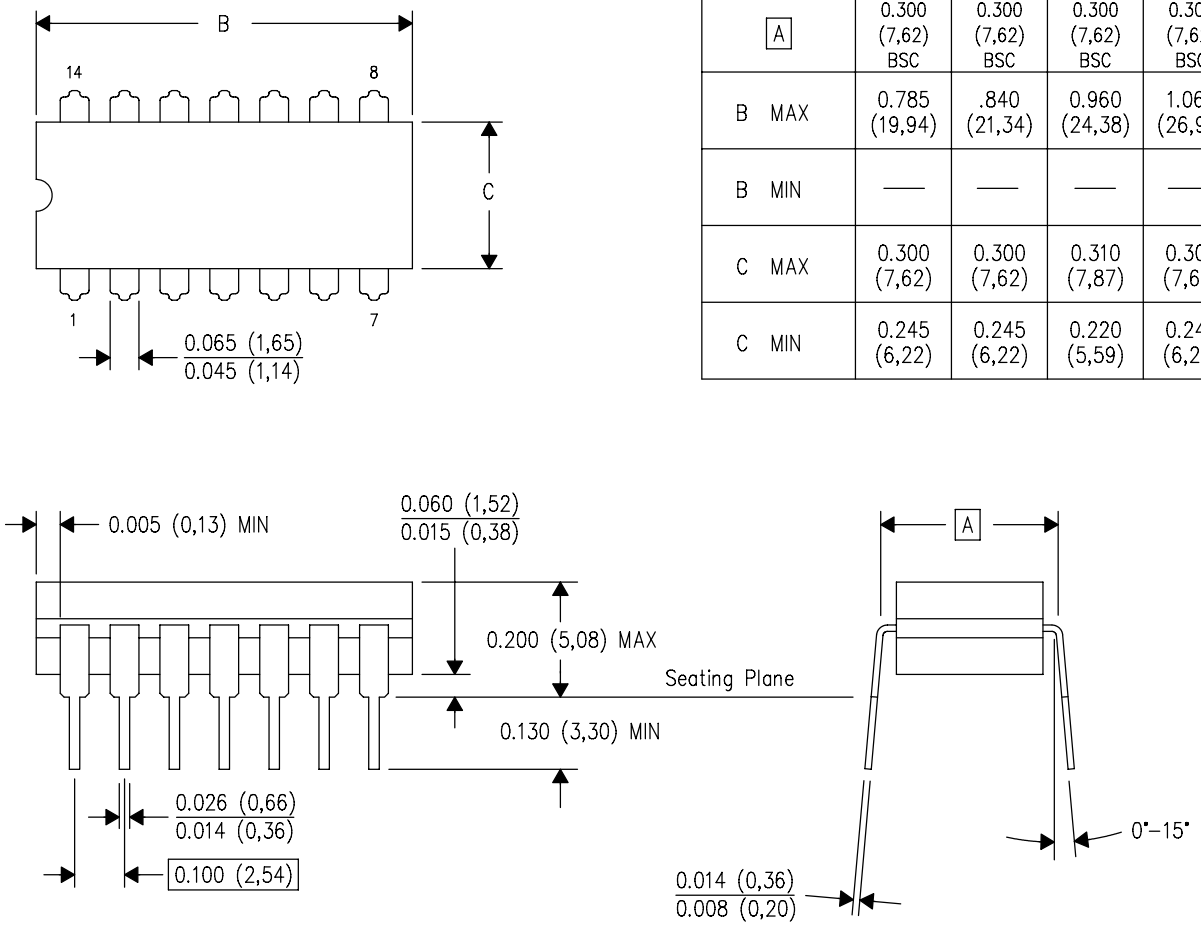

DIM \ PINS **	14	16	18	20
A	0.300 (7,62) BSC	0.300 (7,62) BSC	0.300 (7,62) BSC	0.300 (7,62) BSC
B MAX	0.785 (19,94)	.840 (21,34)	0.960 (24,38)	1.060 (26,92)
B MIN	—	—	—	—
C MAX	0.300 (7,62)	0.300 (7,62)	0.310 (7,87)	0.300 (7,62)
C MIN	0.245 (6,22)	0.245 (6,22)	0.220 (5,59)	0.245 (6,22)

4040083/F 03/03

NOTES:
- A. All linear dimensions are in inches (millimeters).
- B. This drawing is subject to change without notice.
- C. This package is hermetically sealed with a ceramic lid using glass frit.
- D. Index point is provided on cap for terminal identification only on press ceramic glass frit seal only.
- E. Falls within MIL STD 1835 GDIP1–T14, GDIP1–T16, GDIP1–T18 and GDIP1–T20.

N (R–PDIP–T**) PLASTIC DUAL–IN–LINE PACKAGE

16 PINS SHOWN

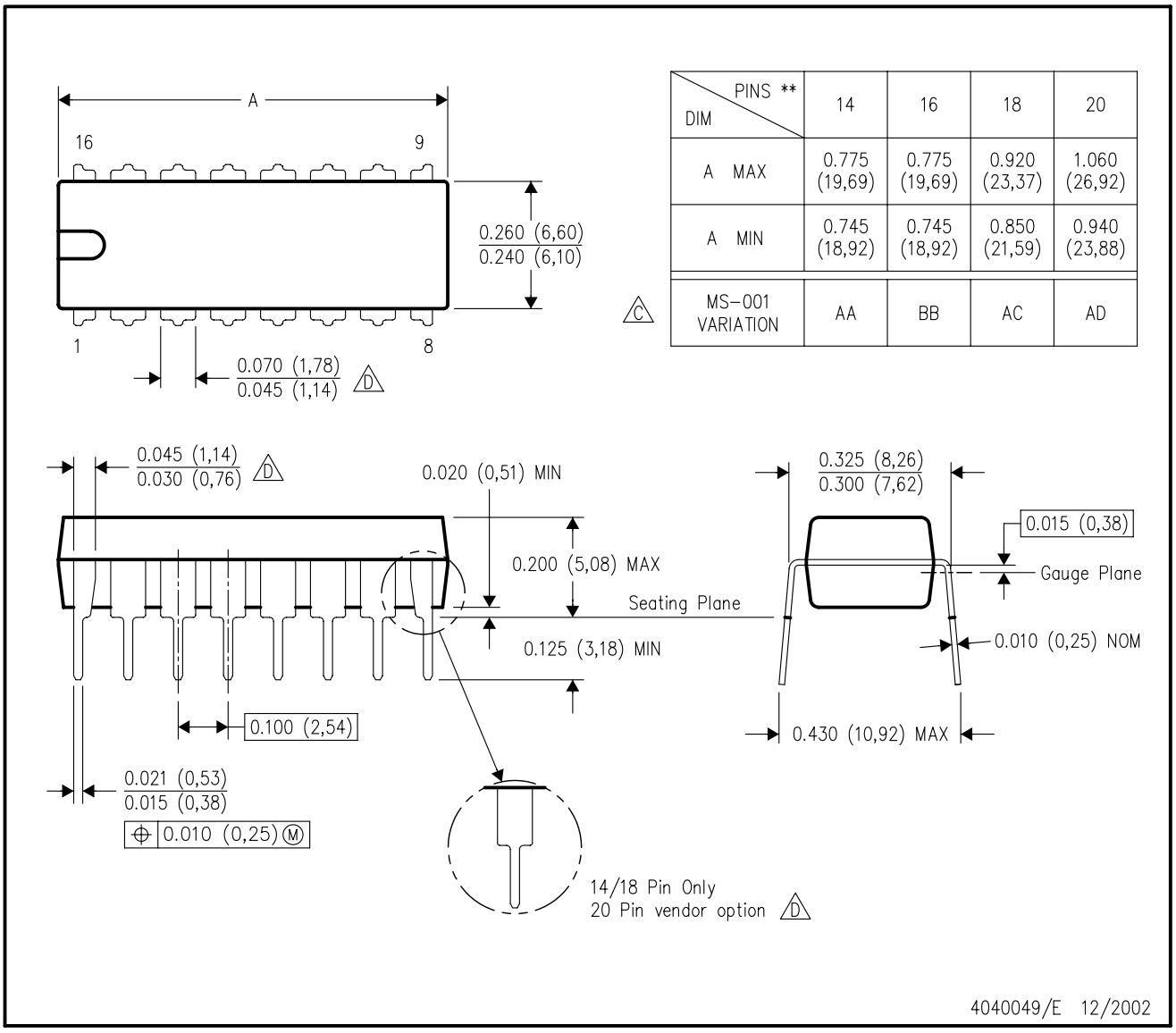

DIM \ PINS **	14	16	18	20
A MAX	0.775 (19,69)	0.775 (19,69)	0.920 (23,37)	1.060 (26,92)
A MIN	0.745 (18,92)	0.745 (18,92)	0.850 (21,59)	0.940 (23,88)
MS–001 VARIATION (C)	AA	BB	AC	AD

NOTES:
A. All linear dimensions are in inches (millimeters).
B. This drawing is subject to change without notice.
C. Falls within JEDEC MS–001, except 18 and 20 pin minimum body length (Dim A).
D. The 20 pin end lead shoulder width is a vendor option, either half or full width.

IMPORTANT NOTICE AND DISCLAIMER

TI PROVIDES TECHNICAL AND RELIABILITY DATA (INCLUDING DATASHEETS), DESIGN RESOURCES (INCLUDING REFERENCE DESIGNS), APPLICATION OR OTHER DESIGN ADVICE, WEB TOOLS, SAFETY INFORMATION, AND OTHER RESOURCES “AS IS” AND WITH ALL FAULTS, AND DISCLAIMS ALL WARRANTIES, EXPRESS AND IMPLIED, INCLUDING WITHOUT LIMITATION ANY IMPLIED WARRANTIES OF MERCHANTABILITY, FITNESS FOR A PARTICULAR PURPOSE OR NON-INFRINGEMENT OF THIRD PARTY INTELLECTUAL PROPERTY RIGHTS.

These resources are intended for skilled developers designing with TI products. You are solely responsible for (1) selecting the appropriate TI products for your application, (2) designing, validating and testing your application, and (3) ensuring your application meets applicable standards, and any other safety, security, regulatory or other requirements.

These resources are subject to change without notice. TI grants you permission to use these resources only for development of an application that uses the TI products described in the resource. Other reproduction and display of these resources is prohibited. No license is granted to any other TI intellectual property right or to any third party intellectual property right. TI disclaims responsibility for, and you fully indemnify TI and its representatives against any claims, damages, costs, losses, and liabilities arising out of your use of these resources.

TI’s products are provided subject to TI’s Terms of Sale, TI’s General Quality Guidelines, or other applicable terms available either on ti.com or provided in conjunction with such TI products. TI’s provision of these resources does not expand or otherwise alter TI’s applicable warranties or warranty disclaimers for TI products. Unless TI explicitly designates a product as custom or customer-specified, TI products are standard, catalog, general purpose devices.

TI objects to and rejects any additional or different terms you may propose.

Copyright © 2026, Texas Instruments Incorporated

Last updated 10/2025