SN74LVC827A 10-Bit Buffer/Driver With 3-State Outputs

1 Features

- Operates From 1.65 V to 3.6 V
- Inputs Accept Voltages to 5.5 V
- Max t_{pd} of 6.7 ns at 3.3 V
- Typical V_{OLP} (Output Ground Bounce) < 0.8 V at V_{CC} = 3.3 V, T_A = 25°C
- Typical V_{OHV} (Output V_{OH} Undershoot) > 2 V at V_{CC} = 3.3 V, T_A = 25°C
- Supports Mixed-Mode Signal Operation on All Ports (5-V Input/Output Voltage With 3.3-V V_{CC})
- I_{off} Supports Live Insertion, Partial-Power-Down Mode, and Back-Drive Protection
- Latch-Up Performance Exceeds 250 mA Per JESD 17
- ESD Protection Exceeds JESD 22
  - 2000-V Human-Body Model
  - 200-V Machine Model
  - 1000-V Charged-Device Model

2 Applications

- LED Displays
- Network Switches
- Telecom Infrastructure
- Servers
- Motor Drivers
- I/O Expanders

3 Description/Ordering Information

The SN74LVC827A device is a 10-bit buffer/bus driver is designed for 1.65-V to 3.6-V V_{CC} operation.

Device Information(1)

PART NUMBER	PACKAGE	BODY SIZE (NOM)
SN74LVC827A	TVSOP (24)	5.00 mm × 4.40 mm
	SOIC (24)	15.40 mm × 7.50 mm
	SSOP (24)	8.20 mm × 5.30 mm

(1) For all available packages, see the orderable addendum at the end of the data sheet.

4 Simplified Schematic

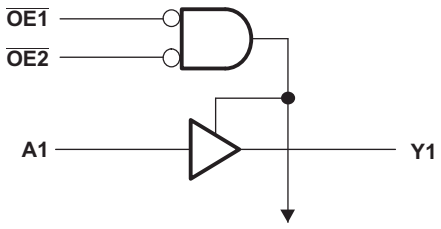

An IMPORTANT NOTICE at the end of this data sheet addresses availability, warranty, changes, use in safety-critical applications, intellectual property matters and other important disclaimers. PRODUCTION DATA.

Table of Contents

1 Features ... 1
2 Applications ... 1
3 Description/Ordering Information ... 1
4 Simplified Schematic ... 1
5 Revision History ... 2
6 Pin Configuration and Functions ... 3
7 Specifications ... 4
7.1 Absolute Maximum Ratings ... 4
7.2 ESD Ratings ... 4
7.3 Recommended Operating Conditions ... 5
7.4 Thermal Information ... 5
7.5 Electrical Characteristics ... 6
7.6 Switching Characteristics, –40°C to 85°C ... 6
7.7 Switching Characteristics, –40°C to 125°C ... 6
7.8 Operating Characteristics ... 7
7.9 Typical Characteristics ... 7
8 Parameter Measurement Information ... 8
9 Detailed Description ... 9
9.1 Overview ... 9
9.2 Functional Block Diagram ... 9
9.3 Feature Description ... 9
9.4 Device Functional Modes ... 9
10 Application and Implementation ... 10
10.1 Application Information ... 10
10.2 Typical Application ... 10
11 Power Supply Recommendations ... 11
12 Layout ... 12
12.1 Layout Guidelines ... 12
12.2 Layout Example ... 12
13 Device and Documentation Support ... 12
13.1 Trademarks ... 12
13.2 Electrostatic Discharge Caution ... 12
13.3 Glossary ... 12
14 Mechanical, Packaging, and Orderable Information ... 12

5 Revision History

Changes from Revision J (February 2005) to Revision K **Page**

- Added *Applications*, *Device Information* table, *Pin Functions* table, *ESD Ratings* table, *Thermal Information* table, *Typical Characteristics*, *Feature Description* section, *Device Functional Modes*, *Application and Implementation* section, *Power Supply Recommendations* section, *Layout* section, *Device and Documentation Support* section, and *Mechanical, Packaging, and Orderable Information* section. ... 1
- Deleted *Ordering Information* table. ... 1
- Changed I_{off} bullet in *Features*. ... 1
- Changed MAX operating temperature to 125°C in the *Recommended Operating Conditions* table. ... 5
- Added –40°C to 125°C temperature range to *Electrical Characteristics* table. ... 6
- Changed $t_{sk(o)}$ in *Switching Characteristics, –40°C to 85°C* table. ... 6
- Added *Switching Characteristics, –40°C to 125°C* table. ... 6

Copyright © 1993–2014, Texas Instruments Incorporated

6 Pin Configuration and Functions

DB, DGV, DW, OR PW PACKAGE
(TOP VIEW)

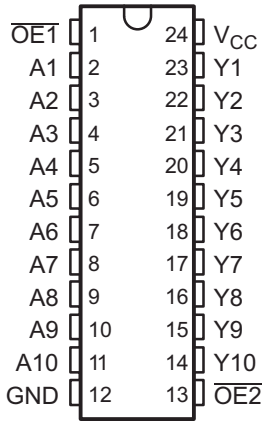

Pin Functions

PIN		TYPE	DESCRIPTION
NO.	NAME		
1	$\overline{OE1}$	I	Output Enable 1
2	A1	I	A1 Input
3	A2	I	A2 Input
4	A3	I	A3 Input
5	A4	I	A4 Input
6	A5	I	A5 Input
7	A6	I	A6 Input
8	A7	I	A7 Input
9	A8	I	A8 Input
10	A9	I	A9 Input
11	A10	I	A10 Input
12	GND	—	Ground Pin
13	$\overline{OE2}$	I	Output Enable 2
14	Y10	O	Y10 Output
15	Y9	O	Y9 Output
16	Y8	O	Y8 Output
17	Y7	O	Y7 Output
18	Y6	O	Y6 Output
19	Y5	O	Y5 Output
20	Y4	O	Y4 Output
21	Y3	O	Y3 Output
22	Y2	O	Y2 Output
23	Y1	O	Y1 Output
24	V_{CC}	—	Power Pin

Copyright © 1993–2014, Texas Instruments Incorporated

7 Specifications

7.1 Absolute Maximum Ratings(1)

over operating free-air temperature range (unless otherwise noted)

			MIN	MAX	UNIT
V_{CC}	Supply voltage range		–0.5	6.5	V
V_I	Input voltage range(2)		–0.5	6.5	V
V_O	Voltage range, applied to any output in the high-impedance or power-off state(2)		–0.5	6.5	V
V_O	Voltage range, applied to any output in the high or low state(2)(3)		–0.5	V_{CC} + 0.5	V
I_{IK}	Input clamp current	V_I < 0		–50	mA
I_{OK}	Output clamp current	V_O < 0		–50	mA
I_O	Continuous output current			±50	mA
	Continuous current through V_{CC} or GND			±100	mA
T_{stg}	Storage temperature range		–65	150	°C

(1) Stresses beyond those listed under *Absolute Maximum Ratings* may cause permanent damage to the device. These are stress ratings only, and functional operation of the device at these or any other conditions beyond those indicated under *Recommended Operating Conditions* is not implied. Exposure to absolute-maximum-rated conditions for extended periods may affect device reliability.
(2) The input negative-voltage and output voltage ratings may be exceeded if the input and output current ratings are observed.
(3) The value of V_{CC} is provided in the *Recommended Operating Conditions* table.

7.2 ESD Ratings

			VALUE	UNIT
$V_{(ESD)}$	Electrostatic discharge	Human body model (HBM), per ANSI/ESDA/JEDEC JS-001, all pins(1)	2000	V
		Charged device model (CDM), per JEDEC specification JESD22-C101, all pins(2)	1000	
		Machine Model (MM)	200	

(1) JEDEC document JEP155 states that 500-V HBM allows safe manufacturing with a standard ESD control process.
(2) JEDEC document JEP157 states that 250-V CDM allows safe manufacturing with a standard ESD control process.

Copyright © 1993–2014, Texas Instruments Incorporated

7.3 Recommended Operating Conditions

over operating free-air temperature range (unless otherwise noted)(1)

			MIN	MAX	UNIT
V_{CC}	Supply voltage	Operating	1.65	3.6	V
		Data retention only	1.5		
V_{IH}	High-level input voltage	V_{CC} = 1.65 V to 1.95 V	0.65 × V_{CC}		V
		V_{CC} = 2.3 V to 2.7 V	1.7		
		V_{CC} = 2.7 V to 3.6 V	2		
V_{IL}	Low-level input voltage	V_{CC} = 1.65 V to 1.95 V		0.35 × V_{CC}	V
		V_{CC} = 2.3 V to 2.7 V		0.7	
		V_{CC} = 2.7 V to 3.6 V		0.8	
V_I	Input voltage		0	5.5	V
V_O	Output voltage	High or low state	0	V_{CC}	V
		3-state	0	5.5	
I_{OH}	High-level output current	V_{CC} = 1.65 V		–4	mA
		V_{CC} = 2.3 V		–8	
		V_{CC} = 2.7 V		–12	
		V_{CC} = 3 V		–24	
I_{OL}	Low-level output current	V_{CC} = 1.65 V		4	mA
		V_{CC} = 2.3 V		8	
		V_{CC} = 2.7 V		12	
		V_{CC} = 3 V		24	
Δt/Δv	Input transition rise or fall rate			10	ns/V
T_A	Operating free-air temperature		–40	125	°C

(1) All unused inputs of the device must be held at V_{CC} or GND to ensure proper device operation. Refer to the TI application report, *Implications of Slow or Floating CMOS Inputs* (SCBA004).

7.4 Thermal Information

THERMAL METRIC(1)		SN74LVC827A				UNIT
		DB	DGV	DW	PW	
		24 PINS				
$R_{\theta JA}$	Junction-to-ambient thermal resistance	75.5	89.4	65.1	88.9	°C/W
$R_{\theta JC(top)}$	Junction-to-case (top) thermal resistance	36.9	22.1	33.3	20.7	
$R_{\theta JB}$	Junction-to-board thermal resistance	33.1	42.8	34.7	43.4	
ψ_{JT}	Junction-to-top characterization parameter	7.6	0.5	9.4	0.5	
ψ_{JB}	Junction-to-board characterization parameter	32.7	42.4	34.3	42.9	
$R_{\theta JC(bot)}$	Junction-to-case (bottom) thermal resistance	—	—	—	—	

(1) For more information about traditional and new thermal metrics, see the *IC Package Thermal Metrics* application report (SPRA953).

Copyright © 1993–2014, Texas Instruments Incorporated

7.5 Electrical Characteristics

over recommended operating free-air temperature range (unless otherwise noted)

PARAMETER		TEST CONDITIONS		V_{CC}	–40°C to 85°C			–40°C to 125°C			UNIT
					MIN	TYP(1)	MAX	MIN	TYP(1)	MAX	
V_{OH}		I_{OH} = –100 µA		1.65 V to 3.6 V	V_{CC} – 0.2			V_{CC} – 0.2			V
		I_{OH} = –4 mA		1.65 V	1.2			1.2			
		I_{OH} = –8 mA		2.3 V	1.7			1.7			
		I_{OH} = –12 mA		2.7 V	2.2			2.2			
				3 V	2.4			2.4			
		I_{OH} = –24 mA		3 V	2.2			2.2			
V_{OL}		I_{OL} = 100 µA		1.65 V to 3.6 V			0.2			0.2	V
		I_{OL} = 4 mA		1.65 V			0.45			0.45	
		I_{OL} = 8 mA		2.3 V			0.7			0.7	
		I_{OL} = 12 mA		2.7 V			0.4			0.4	
		I_{OL} = 24 mA		3 V			0.55			0.60	
I_I		V_I = 0 to 5.5 V		3.6 V			±5			±5	µA
I_{off}		V_I or V_O = 5.5 V		0			±10			±10	µA
I_{OZ}		V_O = 0 to 5.5 V		3.6 V			±10			±10	µA
I_{CC}		V_I = V_{CC} or GND	I_O = 0	3.6 V			10			10	µA
		3.6 V ≤ V_I ≤ 5.5 V(2)								10	
ΔI_{CC}		One input at V_{CC} – 0.6 V, Other inputs at V_{CC} or GND		2.7 V to 3.6 V			500			500	µA
C_i	Control inputs	V_I = V_{CC} or GND		3.3 V		5					pF
	Data inputs					4					
C_o		V_O = V_{CC} or GND		3.3 V		7					pF

(1) All typical values are at V_{CC} = 3.3 V, T_A = 25°C.
(2) This applies in the disabled state only.

7.6 Switching Characteristics, –40°C to 85°C

over recommended operating free-air temperature range (unless otherwise noted) (see Figure 3)

PARAMETER	FROM (INPUT)	TO (OUTPUT)	V_{CC} = 1.8 V ± 0.15 V		V_{CC} = 2.5 V ± 0.2 V		V_{CC} = 2.7 V		V_{CC} = 3.3 V ± 0.3 V		UNIT
			MIN	MAX	MIN	MAX	MIN	MAX	MIN	MAX	
t_{pd}	A	Y		5.5		5.7		7.1	1	6.7	ns
t_{en}	$\overline{OE}$	Y		9.6		8.9		8.5	1	7.3	ns
t_{dis}	$\overline{OE}$	Y		8.4		7.9		7.3	1.8	6.7	ns
$t_{sk(o)}$				1		1		1		1	ns

7.7 Switching Characteristics, –40°C to 125°C

over recommended operating free-air temperature range (unless otherwise noted) (see Figure 3)

PARAMETER	FROM (INPUT)	TO (OUTPUT)	V_{CC} = 1.8 V ± 0.15 V		V_{CC} = 2.5 V ± 0.2 V		V_{CC} = 2.7 V		V_{CC} = 3.3 V ± 0.3 V		UNIT
			MIN	MAX	MIN	MAX	MIN	MAX	MIN	MAX	
t_{pd}	A	Y		5.8		6.2		8.3	1	7.9	ns
t_{en}	$\overline{OE}$	Y		9.9		9.8		9.7	1	8.5	ns
t_{dis}	$\overline{OE}$	Y		8.6		8.55		8.5	1.8	7.9	ns
$t_{sk(o)}$				1		1		1		1.5	ns

Copyright © 1993–2014, Texas Instruments Incorporated

7.8 Operating Characteristics

T_A = 25°C

PARAMETER			TEST CONDITIONS	V_{CC} = 1.8 V	V_{CC} = 2.5 V	V_{CC} = 3.3 V	UNIT
				TYP	TYP	TYP	
C_{pd}	Power dissipation capacitance per buffer/driver	Outputs enabled	f = 10 MHz	20	22	24	pF
		Outputs disabled		3	4	5	

7.9 Typical Characteristics

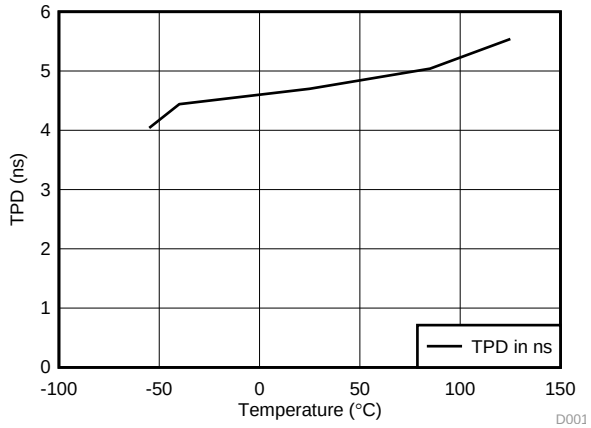

Figure 1. TPD vs Temperature

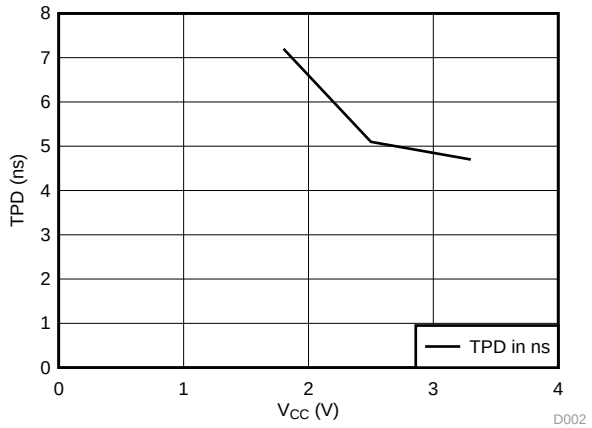

Figure 2. TPD vs V_{CC}

8 Parameter Measurement Information

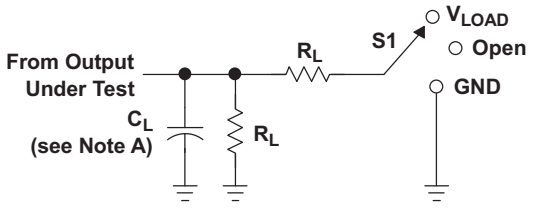

LOAD CIRCUIT

TEST	S1
t_{PLH}/t_{PHL}	Open
t_{PLZ}/t_{PZL}	V_{LOAD}
t_{PHZ}/t_{PZH}	GND

V_{CC}	INPUTS		V_M	V_{LOAD}	C_L	R_L	V_Δ
	V_I	t_r/t_f					
1.8 V ± 0.15 V	V_{CC}	≤2 ns	$V_{CC}/2$	2 × V_{CC}	30 pF	1 kΩ	0.15 V
2.5 V ± 0.2 V	V_{CC}	≤2 ns	$V_{CC}/2$	2 × V_{CC}	30 pF	500 Ω	0.15 V
2.7 V	2.7 V	≤2.5 ns	1.5 V	6 V	50 pF	500 Ω	0.3 V
3.3 V ± 0.3 V	2.7 V	≤2.5 ns	1.5 V	6 V	50 pF	500 Ω	0.3 V

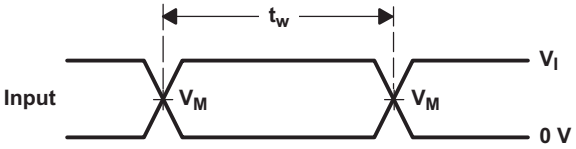

VOLTAGE WAVEFORMS
PULSE DURATION

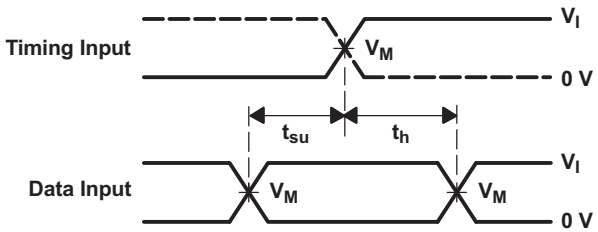

VOLTAGE WAVEFORMS
SETUP AND HOLD TIMES

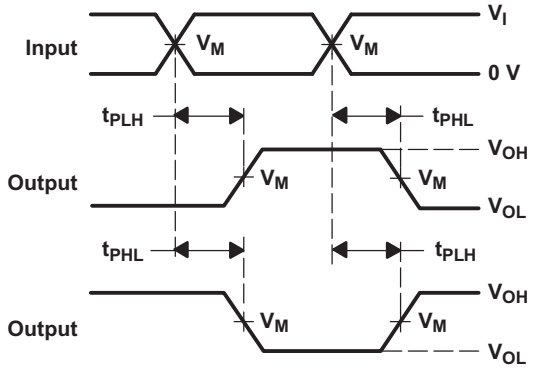

VOLTAGE WAVEFORMS
PROPAGATION DELAY TIMES
INVERTING AND NONINVERTING OUTPUTS

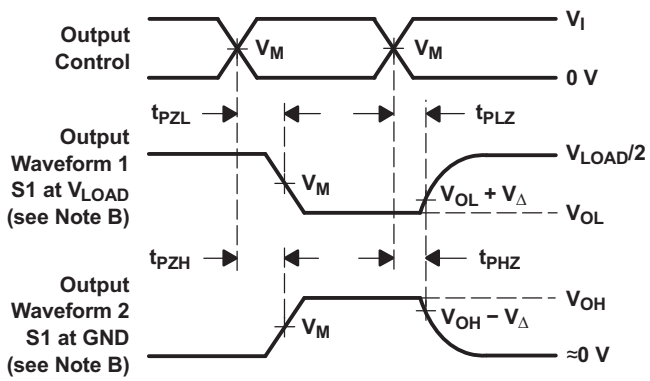

VOLTAGE WAVEFORMS
ENABLE AND DISABLE TIMES
LOW- AND HIGH-LEVEL ENABLING

NOTES: A. C_L includes probe and jig capacitance.
B. Waveform 1 is for an output with internal conditions such that the output is low, except when disabled by the output control. Waveform 2 is for an output with internal conditions such that the output is high, except when disabled by the output control.
C. All input pulses are supplied by generators having the following characteristics: PRR≤ 10 MHz, Z_O = 50 Ω.
D. The outputs are measured one at a time, with one transition per measurement.
E. t_{PLZ} and t_{PHZ} are the same as t_{dis}.
F. t_{PZL} and t_{PZH} are the same as t_{en}.
G. t_{PLH} and t_{PHL} are the same as t_{pd}.
H. All parameters and waveforms are not applicable to all devices.

Figure 3. Load Circuit And Voltage Waveforms

Copyright © 1993–2014, Texas Instruments Incorporated

9 Detailed Description

9.1 Overview

This 10-bit buffer/bus driver is designed for 1.65-V to 3.6-V V_{CC} operation.

The SN74LVC827A provides a high-performance bus interface for wide data paths or buses carrying parity.

The 3-state control gate is a 2-input AND gate with active-low inputs so that, if either output-enable ($\overline{OE1}$ or $\overline{OE2}$) input is high, all ten outputs are in the high-impedance state. The SN74LVC827A provides true data at its outputs.

Inputs can be driven from either 3.3-V or 5-V devices. This feature allows the use of this device as a translator in a mixed 3.3-V/5-V system environment.

To ensure the high-impedance state during power up or power down, $\overline{OE}$ should be tied to V_{CC} through a pullup resistor; the minimum value of the resistor is determined by the current-sinking capability of the driver.

This device is fully specified for partial-power-down applications using I_{off}. The I_{off} circuitry disables the outputs, preventing damaging current backflow through the device when it is powered down.

9.2 Functional Block Diagram

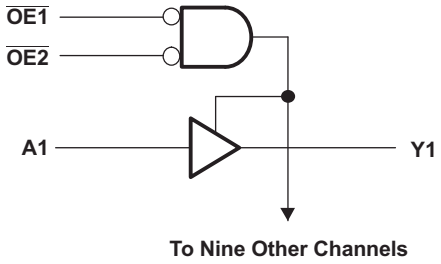

9.3 Feature Description

- Wide operating voltage range
  - Operates from 1.65 V to 3.6 V
- Allows down voltage translation
  - Inputs accept voltages to 5.5 V
- I_{off} feature
  - Allows voltages on the inputs and outputs when V_{CC} is 0 V

9.4 Device Functional Modes

Table 1. Function Table

INPUTS			OUTPUT
$\overline{OE1}$	$\overline{OE2}$	A	Y
L	L	L	L
L	L	H	H
H	X	X	Z
X	H	X	Z

10 Application and Implementation

NOTE

Information in the following applications sections is not part of the TI component specification, and TI does not warrant its accuracy or completeness. TI's customers are responsible for determining suitability of components for their purposes. Customers should validate and test their design implementation to confirm system functionality.

10.1 Application Information

The SN74LVC827A is a high-drive CMOS device that can be used for a multitude of bus interface type applications where the data needs to be retained. It can produce 24 mA of drive current at 3.3 V, thus making this device ideal for driving multiple outputs and for high-speed applications up to 150 MHz. The inputs are 5.5-V tolerant, allowing the device to translate down to V_{CC}.

10.2 Typical Application

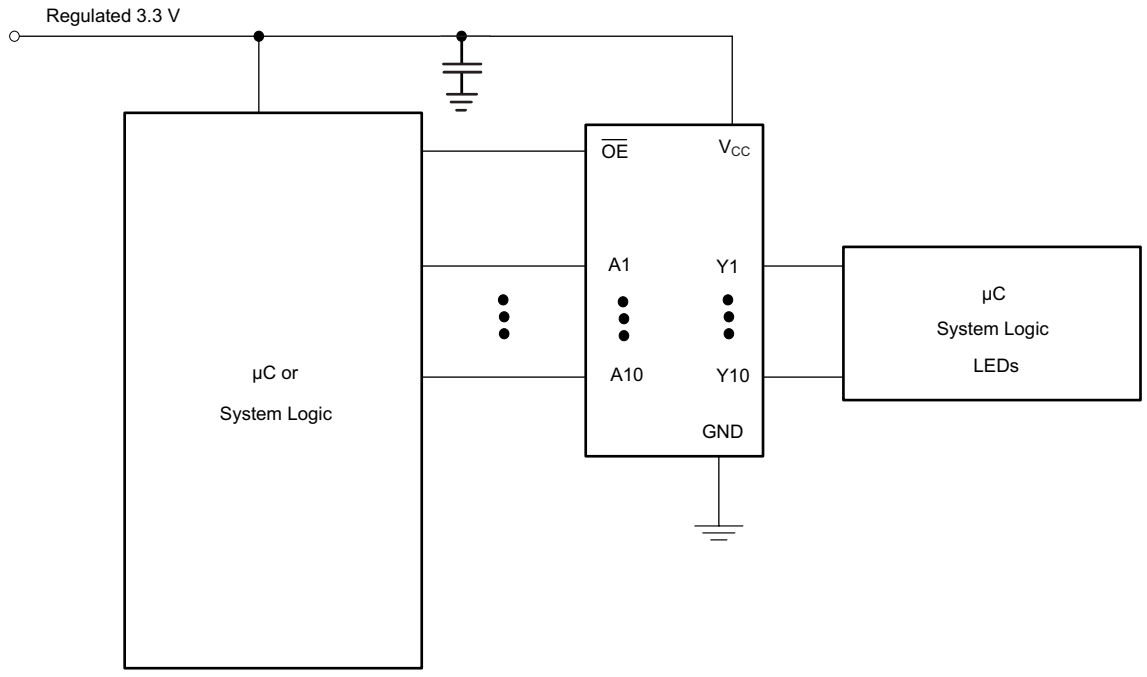

Figure 4. Typical Application Schematic

10.2.1 Design Requirements

This device uses CMOS technology and has balanced output drive. Care should be taken to avoid bus contention because it can drive currents that would exceed maximum limits. The high drive will also create fast edges into light loads; therefore, routing and load conditions should be considered to prevent ringing.

10.2.2 Detailed Design Procedure

1. Recommended Input Conditions:
   - For rise time and fall time specifcations, see Δt/ΔV in the *Recommended Operating Conditions* table.
   - For specified high and low levels, see V_{IH} and V_{IL} in the *Recommended Operating Conditions* table.
   - Inputs are overvoltage tolerant allowing them to go as high as 5.5 V at any valid V_{CC}.
2. Recommend Output Conditions:
   - Load currents should not exceed 50 mA per output and 100 mA total for the part.
   - Outputs should not be pulled above V_{CC}.

Copyright © 1993–2014, Texas Instruments Incorporated

Typical Application (continued)

10.2.3 Application Curves

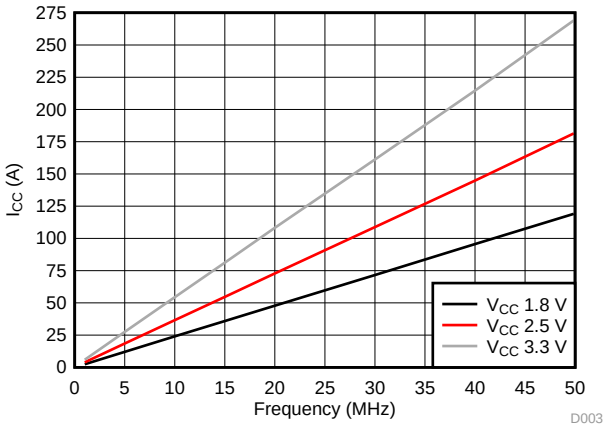

Figure 5. I_{CC} vs Frequency

11 Power Supply Recommendations

The power supply can be any voltage between the Min and Max supply voltage rating located in the *Recommended Operating Conditions* table.

Each V_{CC} pin should have a good bypass capacitor to prevent power disturbance. For devices with a single supply, 0.1 µF is recommended and if there are multiple V_{CC} pins then 0.01 µF or 0.022 µF is recommended for each power pin. It is acceptable to parallel multiple bypass caps to reject different frequencies of noise. A 0.1 µF and 1 µF are commonly used in parallel. The bypass capacitor should be installed as close to the power pin as possible for best results.

Copyright © 1993–2014, Texas Instruments Incorporated

12 Layout

12.1 Layout Guidelines

When using multiple bit logic devices, inputs should not float. In many cases, functions or parts of functions of digital logic devices are unused. Some examples are when only two inputs of a triple-input AND gate are used, or when only 3 of the 4-buffer gates are used. Such input pins should not be left unconnected because the undefined voltages at the outside connections result in undefined operational states.

Specified in Recommended Operating Conditions are rules that must be observed under all circumstances. All unused inputs of digital logic devices must be connected to a high or low bias to prevent them from floating. The logic level that should be applied to any particular unused input depends on the function of the device. Generally they will be tied to GND or V_{CC}, whichever makes more sense or is more convenient. It is acceptable to float outputs unless the part is a transceiver.

12.2 Layout Example

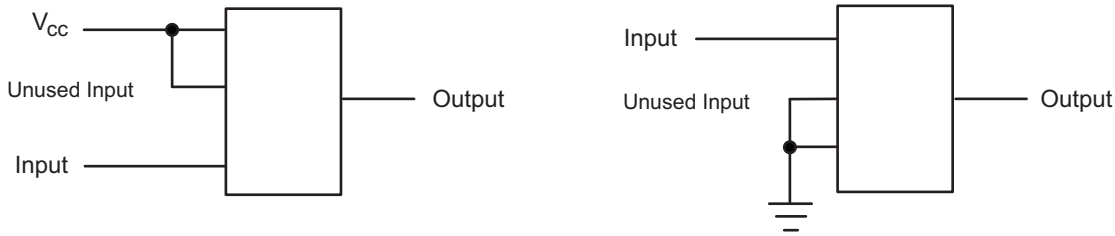

Figure 6. Layout Diagram

13 Device and Documentation Support

13.1 Trademarks

All trademarks are the property of their respective owners.

13.2 Electrostatic Discharge Caution

These devices have limited built-in ESD protection. The leads should be shorted together or the device placed in conductive foam during storage or handling to prevent electrostatic damage to the MOS gates.

13.3 Glossary

SLYZ022 — *TI Glossary*.

This glossary lists and explains terms, acronyms, and definitions.

14 Mechanical, Packaging, and Orderable Information

The following pages include mechanical, packaging, and orderable information. This information is the most current data available for the designated devices. This data is subject to change without notice and revision of this document. For browser-based versions of this data sheet, refer to the left-hand navigation.

Copyright © 1993–2014, Texas Instruments Incorporated

PACKAGING INFORMATION

Orderable part number	Status (1)	Material type (2)	Package | Pins	Package qty | Carrier	RoHS (3)	Lead finish/ Ball material (4)	MSL rating/ Peak reflow (5)	Op temp (°C)	Part marking (6)
SN74LVC827ADBR	Active	Production	SSOP (DB) | 24	2000 | LARGE T&R	Yes	NIPDAU	Level-1-260C-UNLIM	-40 to 125	LC827A
SN74LVC827ADBR.B	Active	Production	SSOP (DB) | 24	2000 | LARGE T&R	Yes	NIPDAU	Level-1-260C-UNLIM	-40 to 125	LC827A
SN74LVC827ADBRG4	Active	Production	SSOP (DB) | 24	2000 | LARGE T&R	-	NIPDAU	Level-1-260C-UNLIM	-40 to 125	LC827A
SN74LVC827ADBRG4.B	Active	Production	SSOP (DB) | 24	2000 | LARGE T&R	Yes	NIPDAU	Level-1-260C-UNLIM	-40 to 125	LC827A
SN74LVC827ADGVR	Active	Production	TVSOP (DGV) | 24	2000 | LARGE T&R	Yes	NIPDAU	Level-1-260C-UNLIM	-40 to 125	LC827A
SN74LVC827ADGVR.B	Active	Production	TVSOP (DGV) | 24	2000 | LARGE T&R	Yes	NIPDAU	Level-1-260C-UNLIM	-40 to 125	LC827A
SN74LVC827ADW	Active	Production	SOIC (DW) | 24	25 | TUBE	Yes	NIPDAU	Level-1-260C-UNLIM	-40 to 125	LVC827A
SN74LVC827ADW.B	Active	Production	SOIC (DW) | 24	25 | TUBE	Yes	NIPDAU	Level-1-260C-UNLIM	-40 to 125	LVC827A
SN74LVC827ADWR	Active	Production	SOIC (DW) | 24	2000 | LARGE T&R	Yes	NIPDAU	Level-1-260C-UNLIM	-40 to 125	LVC827A
SN74LVC827ADWR.B	Active	Production	SOIC (DW) | 24	2000 | LARGE T&R	Yes	NIPDAU	Level-1-260C-UNLIM	-40 to 125	LVC827A
SN74LVC827APW	Active	Production	TSSOP (PW) | 24	60 | TUBE	Yes	NIPDAU	Level-1-260C-UNLIM	-40 to 125	LC827A
SN74LVC827APW.B	Active	Production	TSSOP (PW) | 24	60 | TUBE	Yes	NIPDAU	Level-1-260C-UNLIM	-40 to 125	LC827A
SN74LVC827APWR	Active	Production	TSSOP (PW) | 24	2000 | LARGE T&R	Yes	NIPDAU	Level-1-260C-UNLIM	-40 to 125	LC827A
SN74LVC827APWR.B	Active	Production	TSSOP (PW) | 24	2000 | LARGE T&R	Yes	NIPDAU	Level-1-260C-UNLIM	-40 to 125	LC827A
SN74LVC827APWRG4	Active	Production	TSSOP (PW) | 24	2000 | LARGE T&R	Yes	NIPDAU	Level-1-260C-UNLIM	-40 to 125	LC827A
SN74LVC827APWRG4.B	Active	Production	TSSOP (PW) | 24	2000 | LARGE T&R	Yes	NIPDAU	Level-1-260C-UNLIM	-40 to 125	LC827A
SN74LVC827APWT	Active	Production	TSSOP (PW) | 24	250 | SMALL T&R	Yes	NIPDAU	Level-1-260C-UNLIM	-40 to 125	LC827A
SN74LVC827APWT.B	Active	Production	TSSOP (PW) | 24	250 | SMALL T&R	Yes	NIPDAU	Level-1-260C-UNLIM	-40 to 125	LC827A

(1) **Status:** For more details on status, see our product life cycle.

(2) **Material type:** When designated, preproduction parts are prototypes/experimental devices, and are not yet approved or released for full production. Testing and final process, including without limitation quality assurance, reliability performance testing, and/or process qualification, may not yet be complete, and this item is subject to further changes or possible discontinuation. If available for ordering, purchases will be subject to an additional waiver at checkout, and are intended for early internal evaluation purposes only. These items are sold without warranties of any kind.

(3) **RoHS values:** Yes, No, RoHS Exempt. See the TI RoHS Statement for additional information and value definition.

(4) **Lead finish/Ball material:** Parts may have multiple material finish options. Finish options are separated by a vertical ruled line. Lead finish/Ball material values may wrap to two lines if the finish value exceeds the maximum column width.

(5) **MSL rating/Peak reflow:** The moisture sensitivity level ratings and peak solder (reflow) temperatures. In the event that a part has multiple moisture sensitivity ratings, only the lowest level per JEDEC standards is shown. Refer to the shipping label for the actual reflow temperature that will be used to mount the part to the printed circuit board.

(6) **Part marking:** There may be an additional marking, which relates to the logo, the lot trace code information, or the environmental category of the part.

Multiple part markings will be inside parentheses. Only one part marking contained in parentheses and separated by a "~" will appear on a part. If a line is indented then it is a continuation of the previous line and the two combined represent the entire part marking for that device.

Important Information and Disclaimer: The information provided on this page represents TI's knowledge and belief as of the date that it is provided. TI bases its knowledge and belief on information provided by third parties, and makes no representation or warranty as to the accuracy of such information. Efforts are underway to better integrate information from third parties. TI has taken and continues to take reasonable steps to provide representative and accurate information but may not have conducted destructive testing or chemical analysis on incoming materials and chemicals. TI and TI suppliers consider certain information to be proprietary, and thus CAS numbers and other limited information may not be available for release.

In no event shall TI's liability arising out of such information exceed the total purchase price of the TI part(s) at issue in this document sold by TI to Customer on an annual basis.

TAPE AND REEL INFORMATION

REEL DIMENSIONS

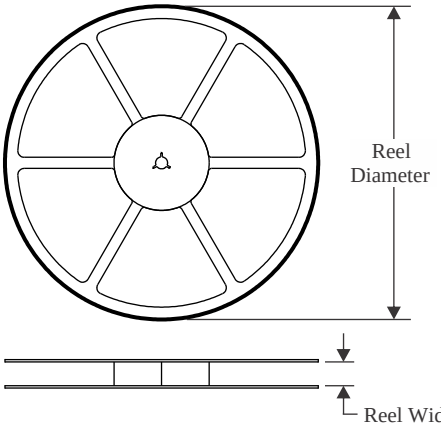

TAPE DIMENSIONS

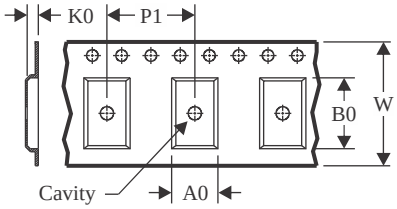

A0	Dimension designed to accommodate the component width
B0	Dimension designed to accommodate the component length
K0	Dimension designed to accommodate the component thickness
W	Overall width of the carrier tape
P1	Pitch between successive cavity centers

QUADRANT ASSIGNMENTS FOR PIN 1 ORIENTATION IN TAPE

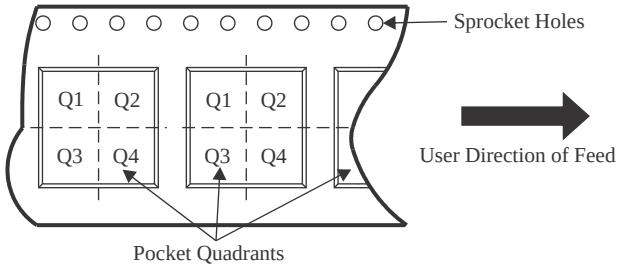

*All dimensions are nominal

Device	Package Type	Package Drawing	Pins	SPQ	Reel Diameter (mm)	Reel Width W1 (mm)	A0 (mm)	B0 (mm)	K0 (mm)	P1 (mm)	W (mm)	Pin1 Quadrant
SN74LVC827ADBR	SSOP	DB	24	2000	330.0	16.4	8.2	8.8	2.5	12.0	16.0	Q1
SN74LVC827ADBRG4	SSOP	DB	24	2000	330.0	16.4	8.2	8.8	2.5	12.0	16.0	Q1
SN74LVC827ADGVR	TVSOP	DGV	24	2000	330.0	12.4	6.9	5.6	1.6	8.0	12.0	Q1
SN74LVC827ADWR	SOIC	DW	24	2000	330.0	24.4	10.75	15.7	2.7	12.0	24.0	Q1
SN74LVC827APWR	TSSOP	PW	24	2000	330.0	16.4	6.95	8.3	1.6	8.0	16.0	Q1
SN74LVC827APWRG4	TSSOP	PW	24	2000	330.0	16.4	6.95	8.3	1.6	8.0	16.0	Q1
SN74LVC827APWT	TSSOP	PW	24	250	330.0	16.4	6.95	8.3	1.6	8.0	16.0	Q1

TAPE AND REEL BOX DIMENSIONS

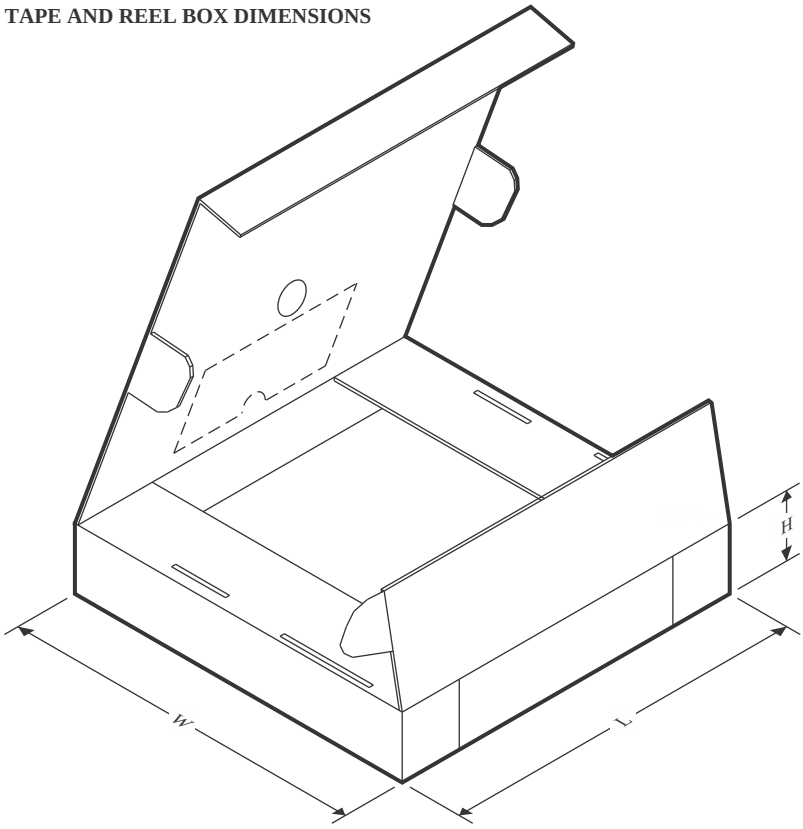

*All dimensions are nominal

Device	Package Type	Package Drawing	Pins	SPQ	Length (mm)	Width (mm)	Height (mm)
SN74LVC827ADBR	SSOP	DB	24	2000	353.0	353.0	32.0
SN74LVC827ADBRG4	SSOP	DB	24	2000	353.0	353.0	32.0
SN74LVC827ADGVR	TVSOP	DGV	24	2000	353.0	353.0	32.0
SN74LVC827ADWR	SOIC	DW	24	2000	350.0	350.0	43.0
SN74LVC827APWR	TSSOP	PW	24	2000	353.0	353.0	32.0
SN74LVC827APWRG4	TSSOP	PW	24	2000	353.0	353.0	32.0
SN74LVC827APWT	TSSOP	PW	24	250	353.0	353.0	32.0

TUBE

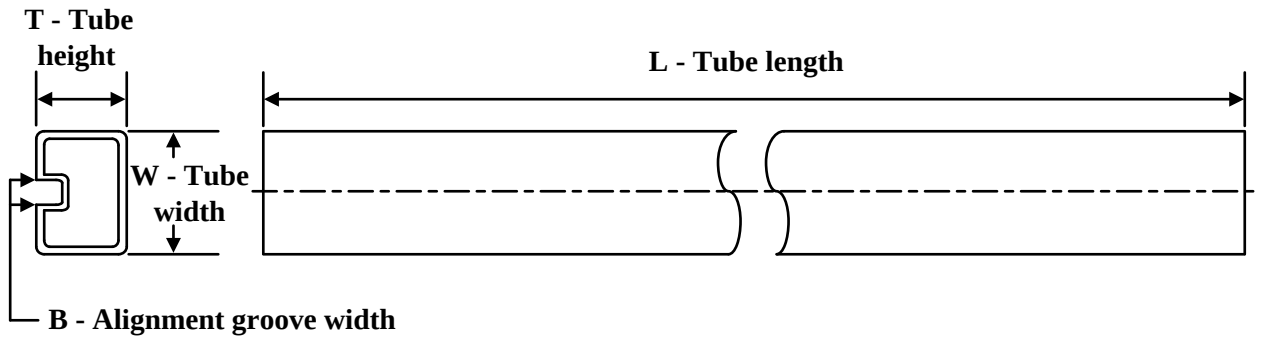

*All dimensions are nominal

Device	Package Name	Package Type	Pins	SPQ	L (mm)	W (mm)	T (µm)	B (mm)
SN74LVC827ADW	DW	SOIC	24	25	506.98	12.7	4826	6.6
SN74LVC827ADW.B	DW	SOIC	24	25	506.98	12.7	4826	6.6
SN74LVC827APW	PW	TSSOP	24	60	530	10.2	3600	3.5
SN74LVC827APW.B	PW	TSSOP	24	60	530	10.2	3600	3.5

PACKAGE OUTLINE

PW0024A

TSSOP - 1.2 mm max height

SMALL OUTLINE PACKAGE

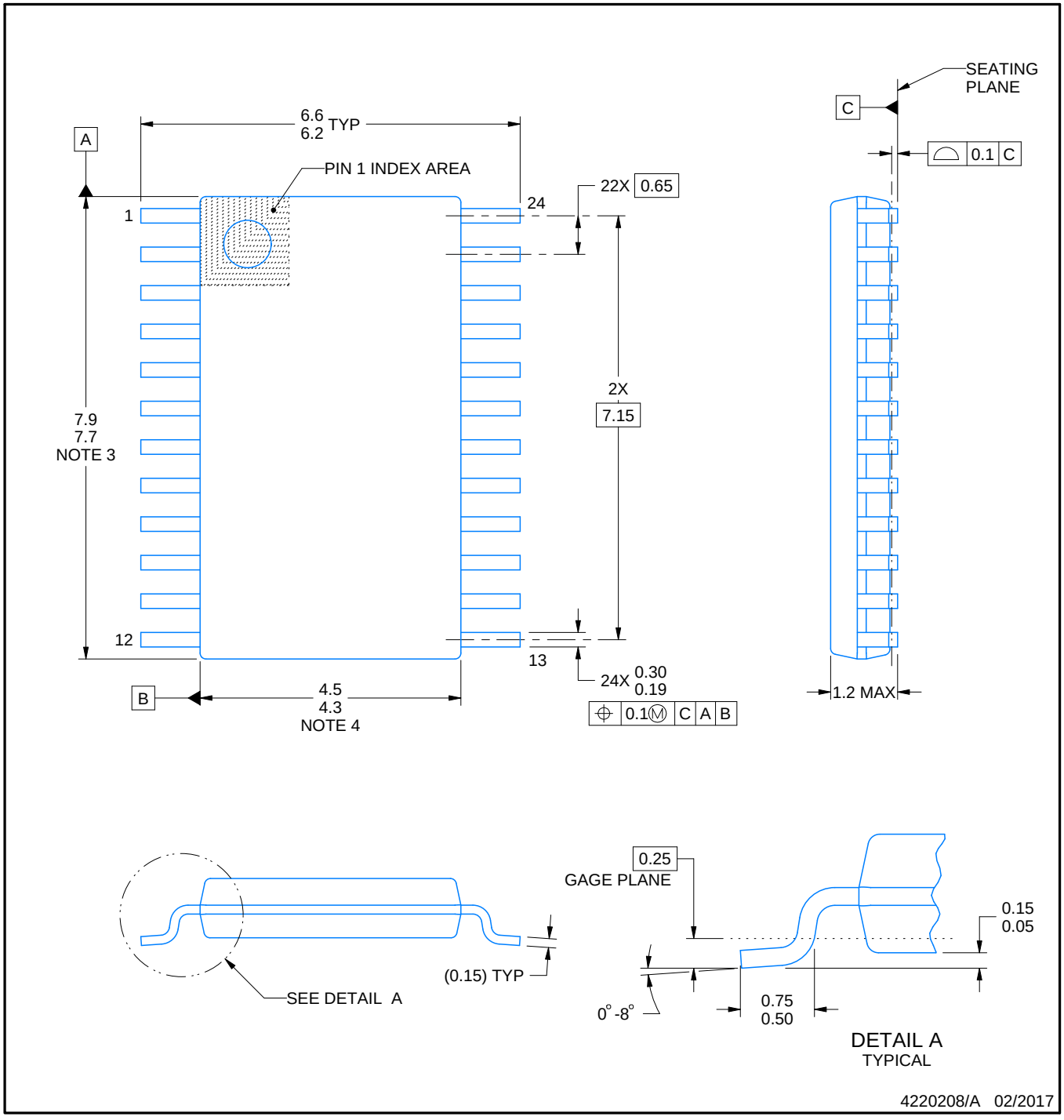

NOTES:

1. All linear dimensions are in millimeters. Any dimensions in parenthesis are for reference only. Dimensioning and tolerancing per ASME Y14.5M.
2. This drawing is subject to change without notice.
3. This dimension does not include mold flash, protrusions, or gate burrs. Mold flash, protrusions, or gate burrs shall not exceed 0.15 mm per side.
4. This dimension does not include interlead flash. Interlead flash shall not exceed 0.25 mm per side.
5. Reference JEDEC registration MO-153.

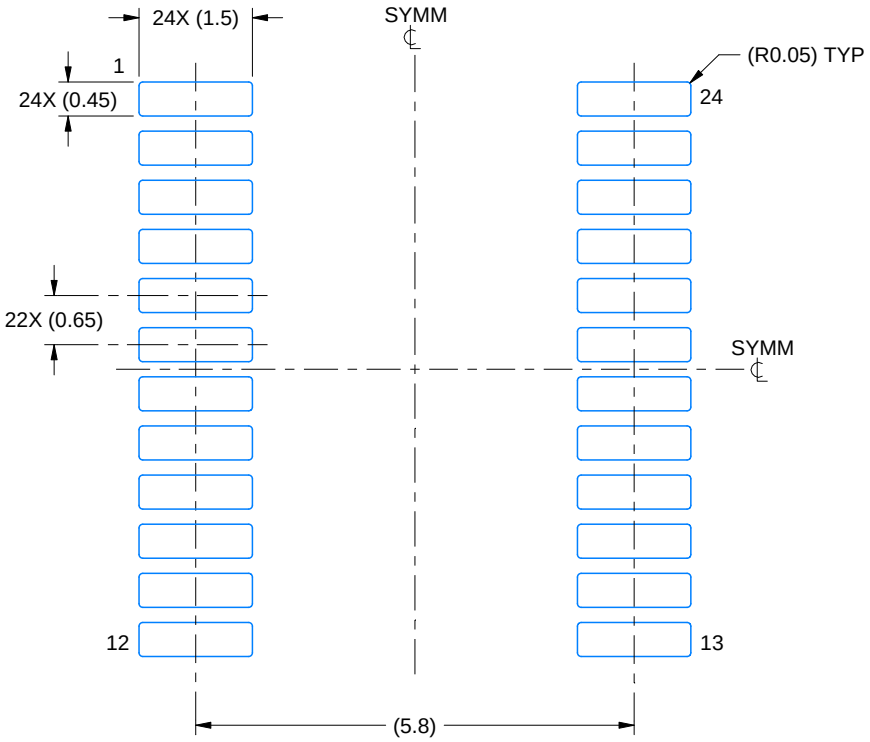

LAND PATTERN EXAMPLE
EXPOSED METAL SHOWN
SCALE: 10X

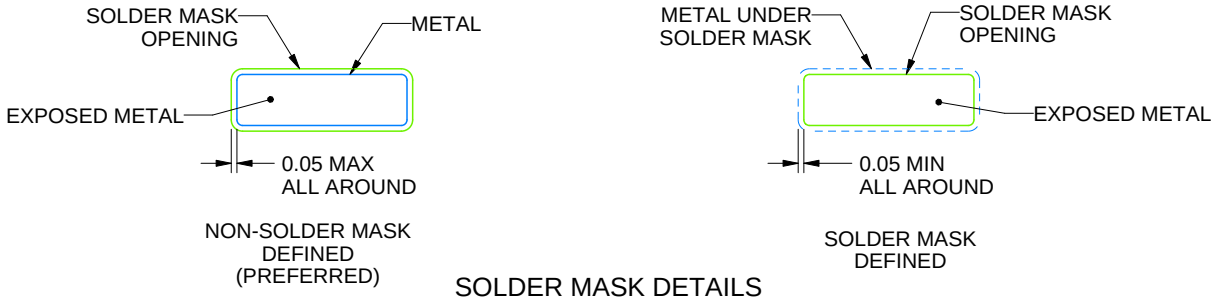

SOLDER MASK DETAILS

4220208/A 02/2017

NOTES: (continued)

6. Publication IPC-7351 may have alternate designs.
7. Solder mask tolerances between and around signal pads can vary based on board fabrication site.

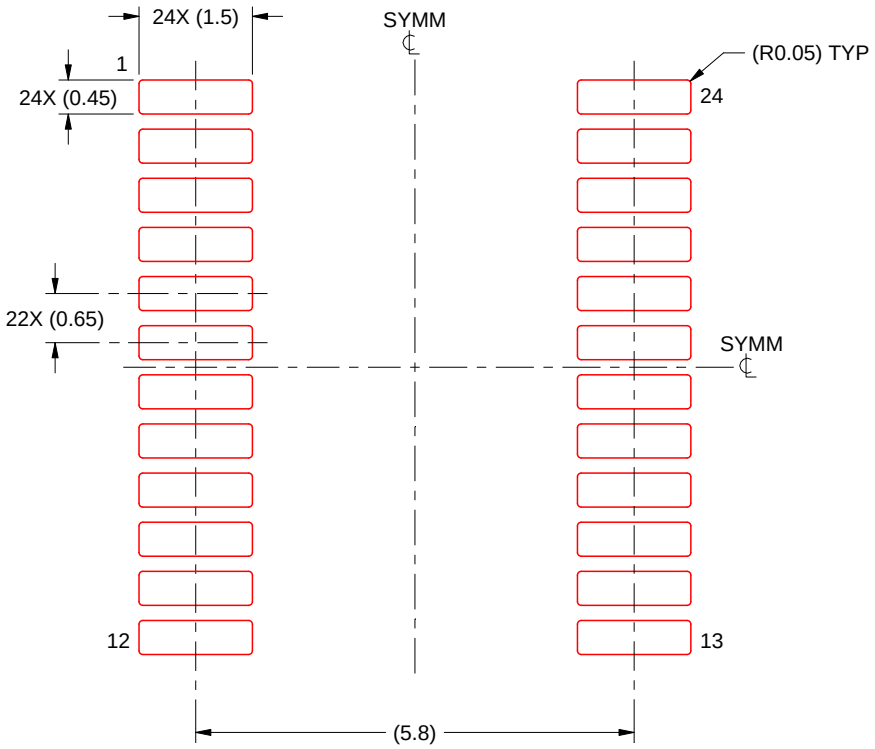

SOLDER PASTE EXAMPLE
BASED ON 0.125 mm THICK STENCIL
SCALE: 10X

4220208/A 02/2017

NOTES: (continued)

8. Laser cutting apertures with trapezoidal walls and rounded corners may offer better paste release. IPC-7525 may have alternate design recommendations.
9. Board assembly site may have different recommendations for stencil design.

DW (R–PDSO–G24) PLASTIC SMALL OUTLINE

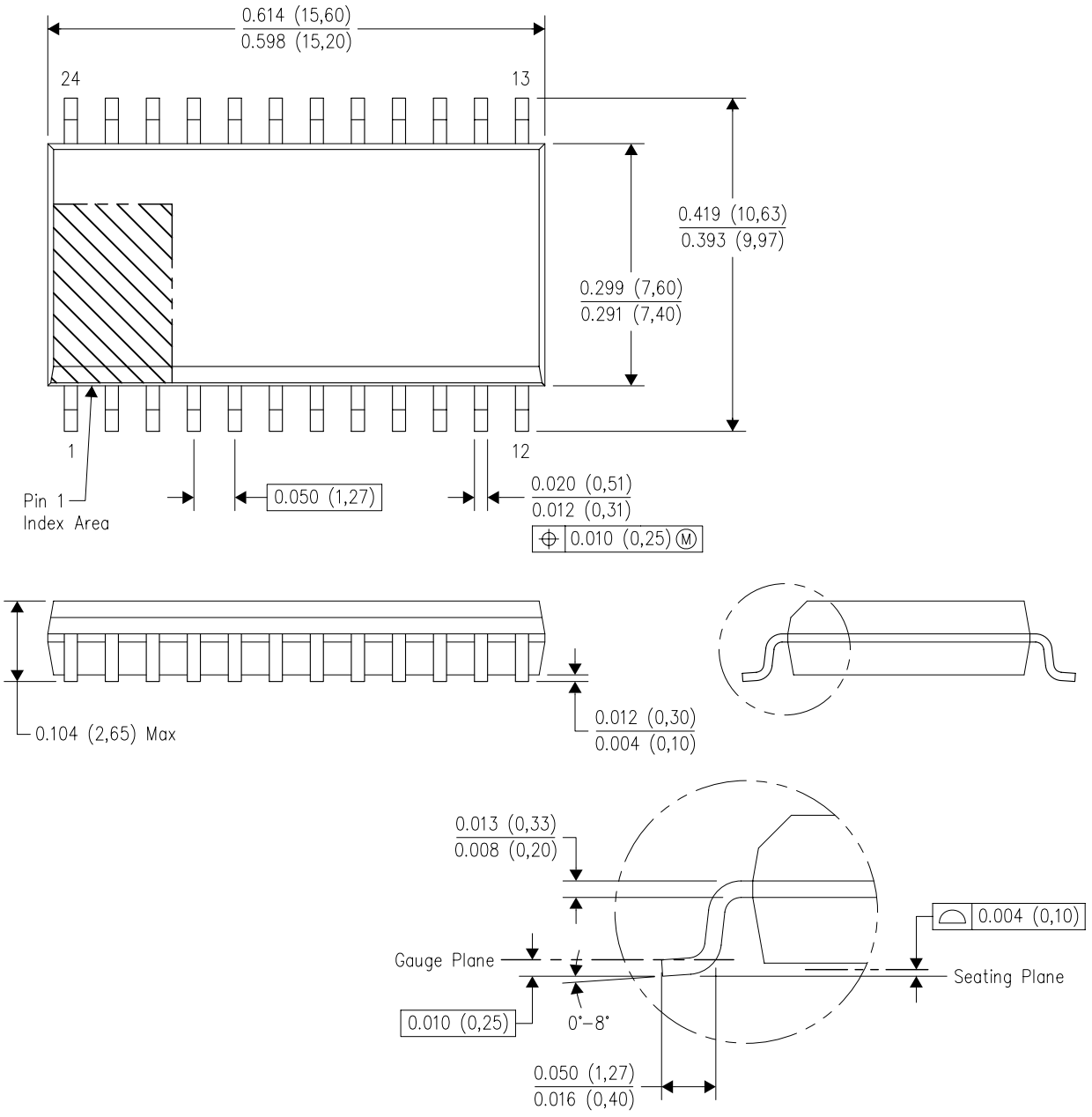

NOTES:
A. All linear dimensions are in inches (millimeters). Dimensioning and tolerancing per ASME Y14.5M–1994.
B. This drawing is subject to change without notice.
C. Body dimensions do not include mold flash or protrusion not to exceed 0.006 (0,15).
D. Falls within JEDEC MS–013 variation AD.

DW (R–PDSO–G24) PLASTIC SMALL OUTLINE

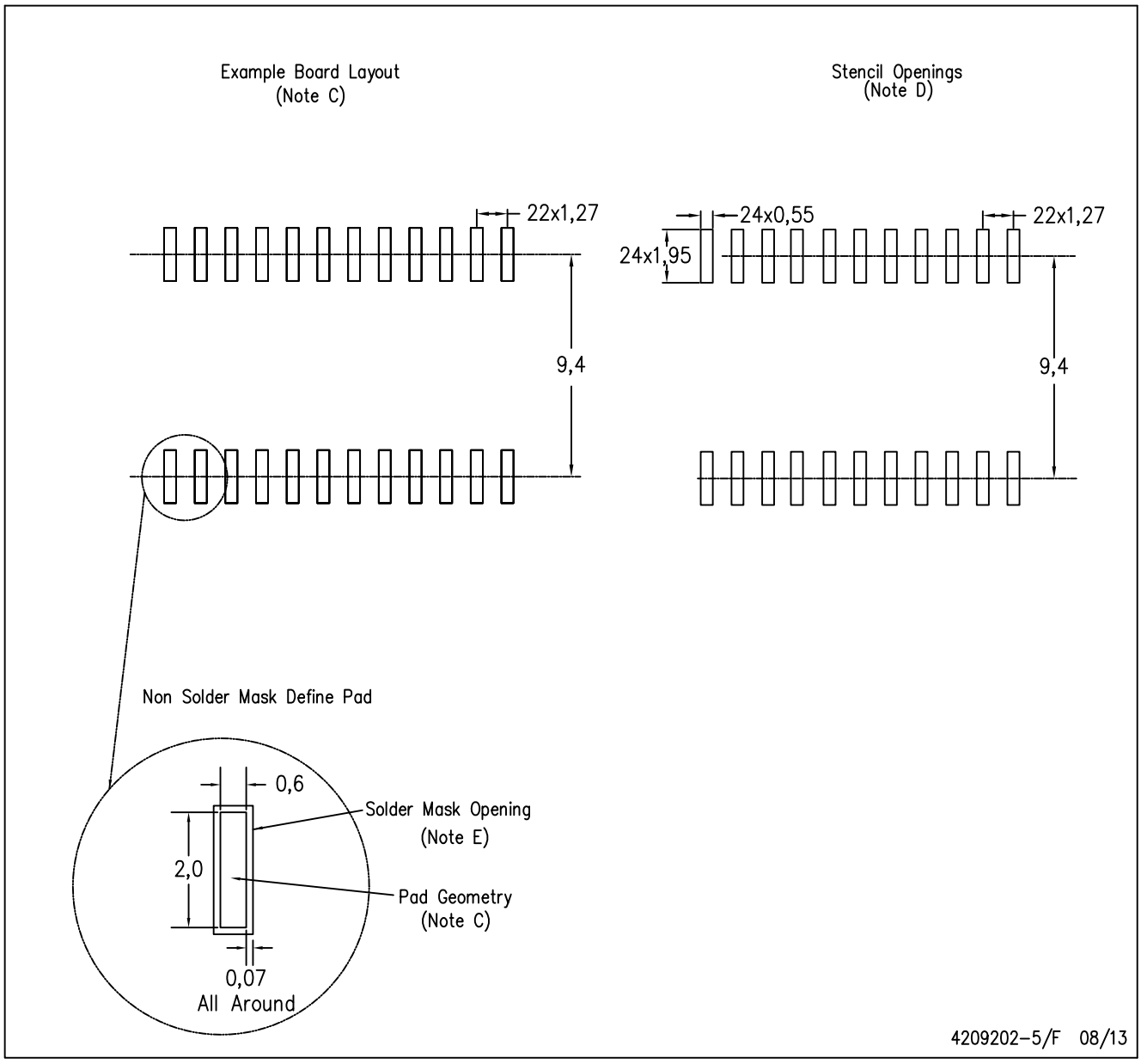

NOTES:
A. All linear dimensions are in millimeters.
B. This drawing is subject to change without notice.
C. Refer to IPC7351 for alternate board design.
D. Laser cutting apertures with trapezoidal walls and also rounding corners will offer better paste release. Customers should contact their board assembly site for stencil design recommendations. Refer to IPC–7525
E. Customers should contact their board fabrication site for solder mask tolerances between and around signal pads.

PACKAGE OUTLINE

DGV0024A

TVSOP - 1.2 mm max height

SMALL OUTLINE PACKAGE

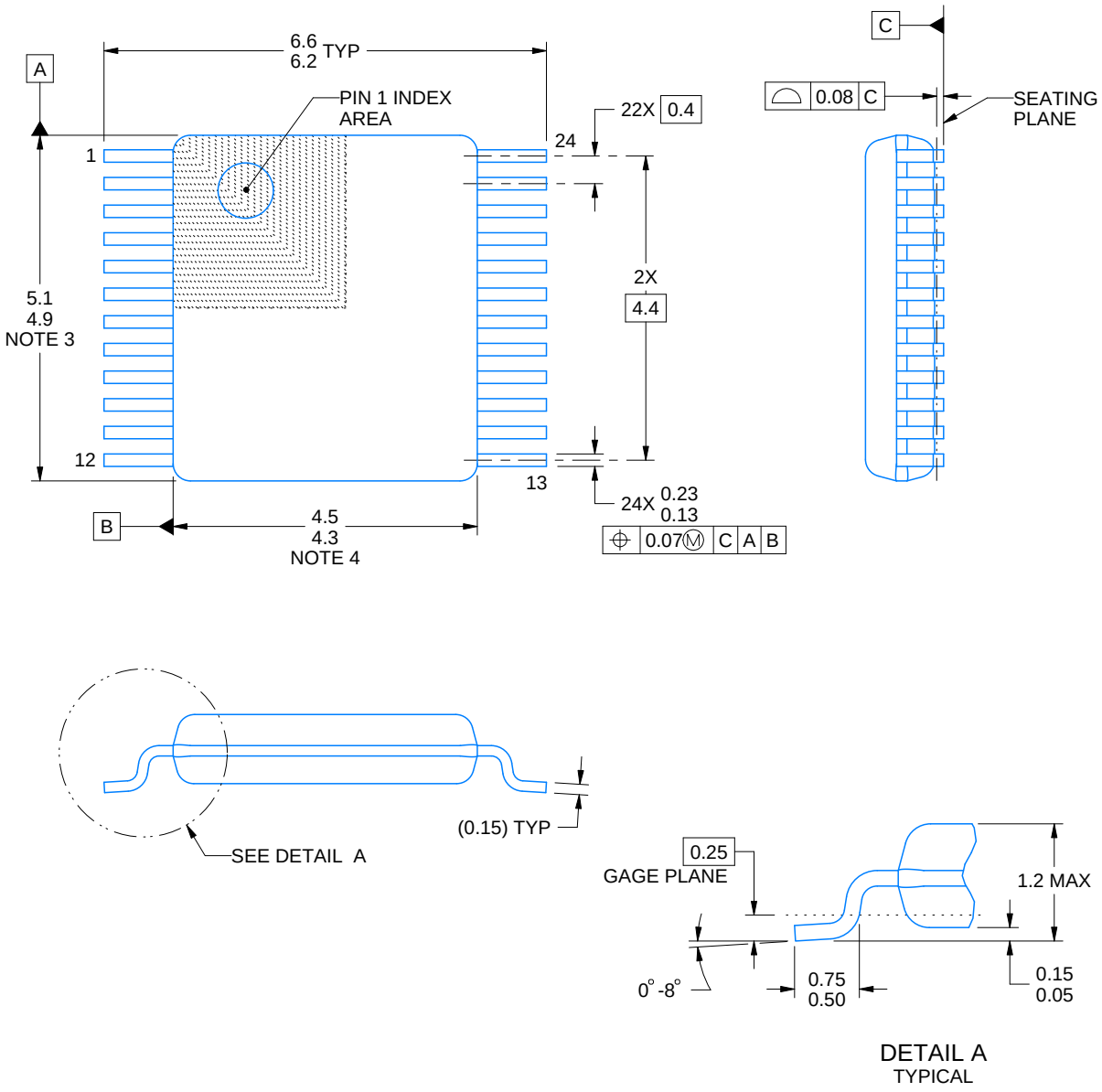

NOTES:

1. All linear dimensions are in millimeters. Any dimensions in parenthesis are for reference only. Dimensioning and tolerancing per ASME Y14.5M.
2. This drawing is subject to change without notice.
3. This dimension does not include mold flash, protrusions, or gate burrs. Mold flash, protrusions, or gate burrs shall not exceed 0.15 mm per side.
4. This dimension does not include interlead flash. Interlead flash shall not exceed 0.25 mm per side.
5. Reference JEDEC registration MO-153.

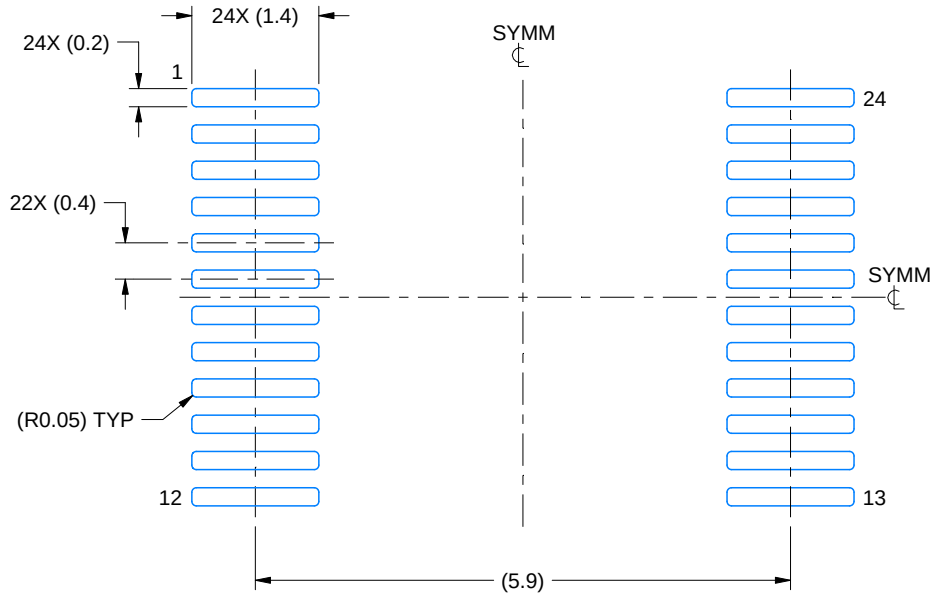

LAND PATTERN EXAMPLE
EXPOSED METAL SHOWN
SCALE: 12X

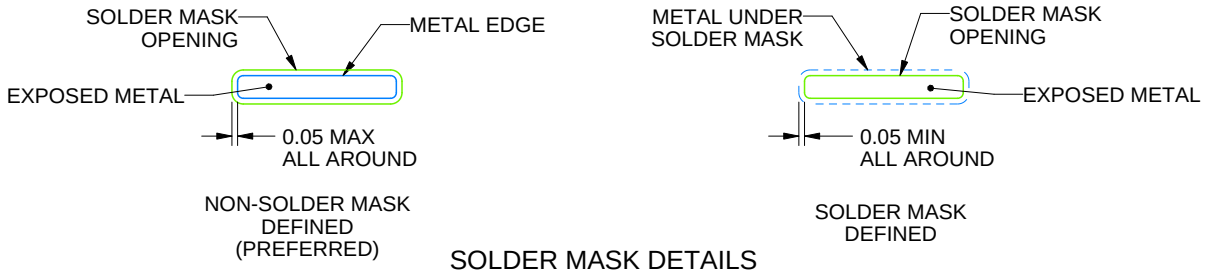

SOLDER MASK DETAILS

4229221/A 12/2022

NOTES: (continued)

6. Publication IPC-7351 may have alternate designs.
7. Solder mask tolerances between and around signal pads can vary based on board fabrication site.

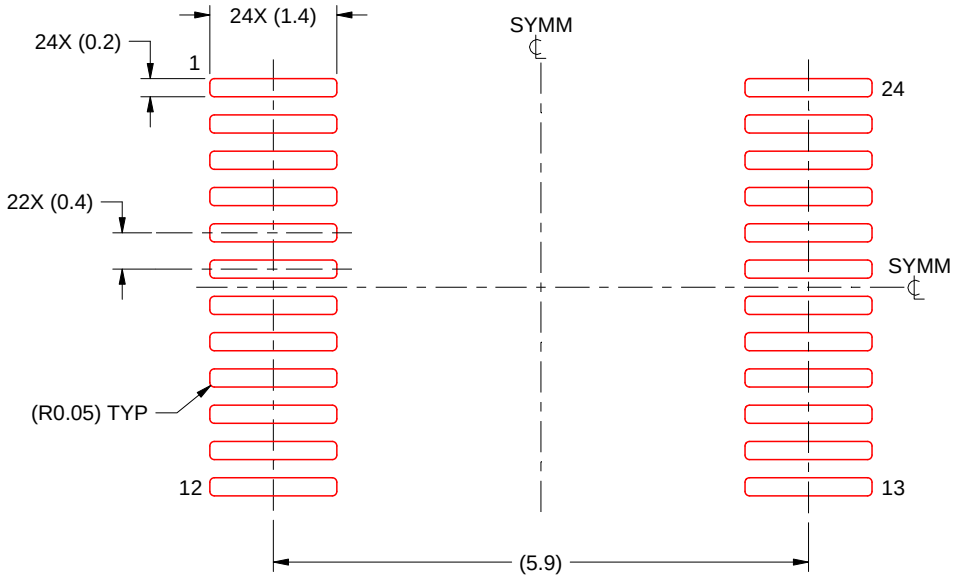

SOLDER PASTE EXAMPLE
BASED ON 0.125 mm THICK STENCIL
SCALE: 12X

4229221/A 12/2022

NOTES: (continued)

8. Laser cutting apertures with trapezoidal walls and rounded corners may offer better paste release. IPC-7525 may have alternate design recommendations.
9. Board assembly site may have different recommendations for stencil design.

MSSO002E – JANUARY 1995 – REVISED DECEMBER 2001

DB (R-PDSO-G)** **PLASTIC SMALL-OUTLINE**

28 PINS SHOWN

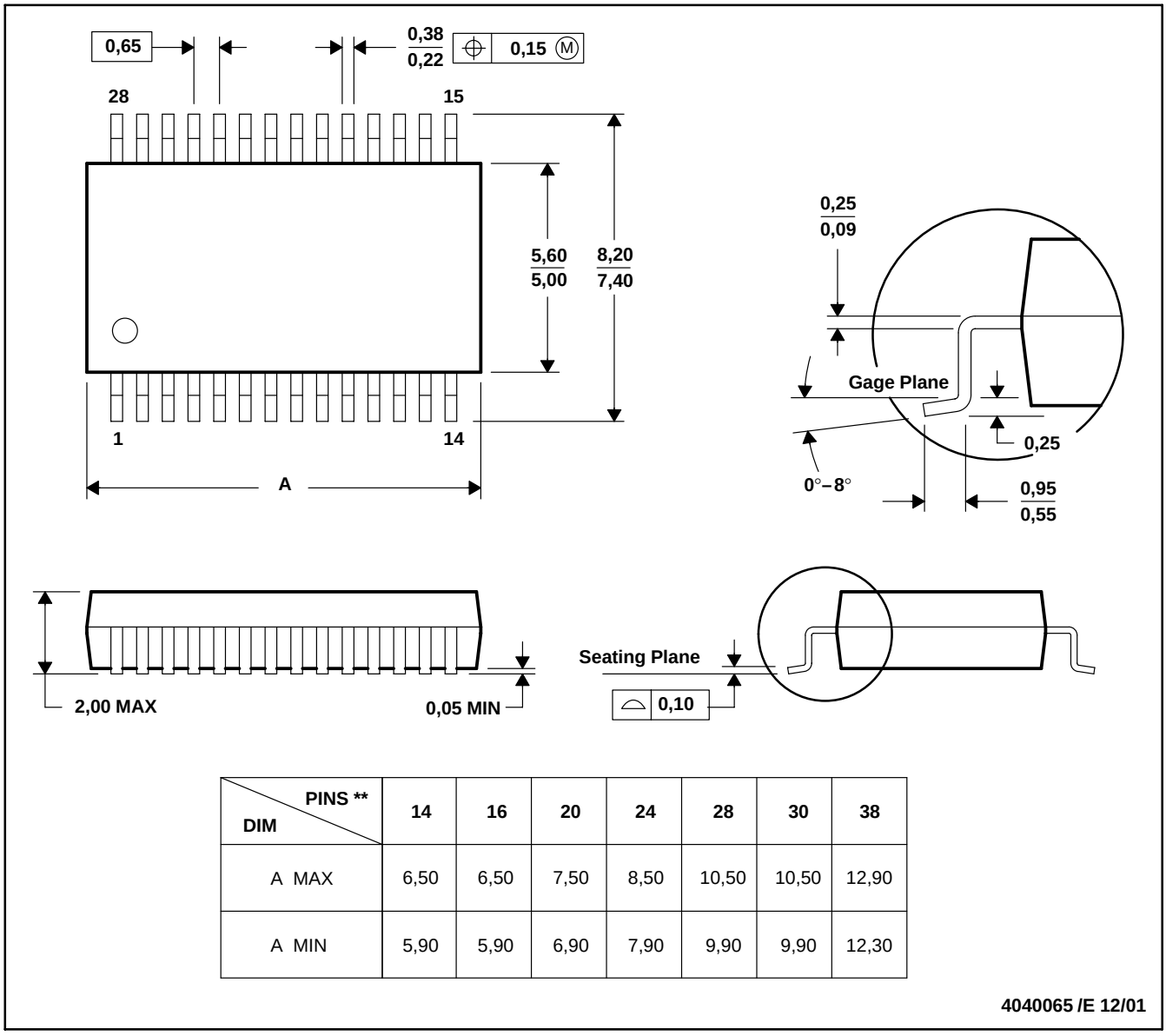

DIM \ PINS **	14	16	20	24	28	30	38
A MAX	6,50	6,50	7,50	8,50	10,50	10,50	12,90
A MIN	5,90	5,90	6,90	7,90	9,90	9,90	12,30

4040065 /E 12/01

NOTES: A. All linear dimensions are in millimeters.
B. This drawing is subject to change without notice.
C. Body dimensions do not include mold flash or protrusion not to exceed 0,15.
D. Falls within JEDEC MO-150

IMPORTANT NOTICE AND DISCLAIMER

TI PROVIDES TECHNICAL AND RELIABILITY DATA (INCLUDING DATASHEETS), DESIGN RESOURCES (INCLUDING REFERENCE DESIGNS), APPLICATION OR OTHER DESIGN ADVICE, WEB TOOLS, SAFETY INFORMATION, AND OTHER RESOURCES “AS IS” AND WITH ALL FAULTS, AND DISCLAIMS ALL WARRANTIES, EXPRESS AND IMPLIED, INCLUDING WITHOUT LIMITATION ANY IMPLIED WARRANTIES OF MERCHANTABILITY, FITNESS FOR A PARTICULAR PURPOSE OR NON-INFRINGEMENT OF THIRD PARTY INTELLECTUAL PROPERTY RIGHTS.

These resources are intended for skilled developers designing with TI products. You are solely responsible for (1) selecting the appropriate TI products for your application, (2) designing, validating and testing your application, and (3) ensuring your application meets applicable standards, and any other safety, security, regulatory or other requirements.

These resources are subject to change without notice. TI grants you permission to use these resources only for development of an application that uses the TI products described in the resource. Other reproduction and display of these resources is prohibited. No license is granted to any other TI intellectual property right or to any third party intellectual property right. TI disclaims responsibility for, and you fully indemnify TI and its representatives against any claims, damages, costs, losses, and liabilities arising out of your use of these resources.

TI’s products are provided subject to TI’s Terms of Sale, TI’s General Quality Guidelines, or other applicable terms available either on ti.com or provided in conjunction with such TI products. TI’s provision of these resources does not expand or otherwise alter TI’s applicable warranties or warranty disclaimers for TI products. Unless TI explicitly designates a product as custom or customer-specified, TI products are standard, catalog, general purpose devices.

TI objects to and rejects any additional or different terms you may propose.

Copyright © 2026, Texas Instruments Incorporated

Last updated 10/2025