LMC606x Precision CMOS, Micropower Operational Amplifiers

1 Features

- Typical values unless otherwise noted
- Low offset voltage: 100µV
- Ultra-low supply current: 16µA/amplifier
- Supply range: 4.5V to 15V
- Ultra-low input bias current: 10fA
- Output swing within 10mV of supply rail, 100kΩ load
- Input common-mode includes V−
- High voltage gain: 140dB
- Improved latchup immunity

2 Applications

- Instrumentation amplifier
- Photodiode and infrared detector preamplifier
- Transducer amplifiers
- Portable analytic instruments
- Medical instrumentation
- Digital-to-analog converter (DAC)
- Charge amplifier for piezoelectric transducers

3 Description

The LMC6061, LMC6062, and LMC6064 (LMC606x) are precision, low-offset-voltage, micropower operational amplifiers (op amps), capable of precision single-supply operation. Performance characteristics include ultra-low input bias current, high voltage gain, rail-to-rail output swing, and an input common-mode voltage range that includes ground. These features, plus the low power consumption of the op amps, make the LMC606x an excellent choice for battery-powered applications.

Other applications using the LMC606x include precision full-wave rectifiers, integrators, references, sample-and-hold circuits, and true instrumentation amplifiers.

This device is built with TI's advanced double-poly silicon-gate CMOS process.

For designs that require higher speed, see the LMC608x precision operational amplifiers.

PATENT PENDING

Device Information

PART NUMBER	CHANNEL COUNT	PACKAGE(1)
LMC6061	Single	D (SOIC, 8)
LMC6062	Dual	D (SOIC, 8)
		P (PDIP, 8)
LMC6064	Quad	D (SOIC, 8)

(1) For more information, see Section 9.

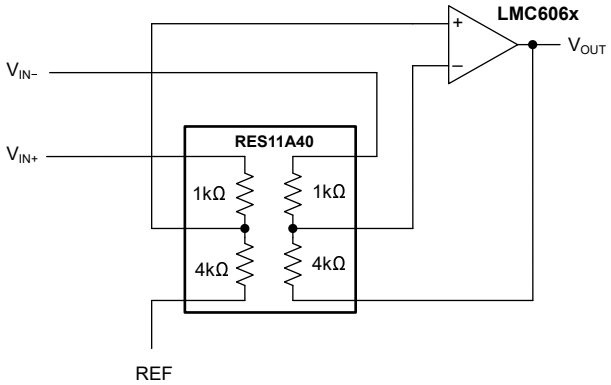

Difference Amplifier Application With RES11A

An IMPORTANT NOTICE at the end of this data sheet addresses availability, warranty, changes, use in safety-critical applications, intellectual property matters and other important disclaimers. PRODUCTION DATA.

Table of Contents

1 Features....1
2 Applications....1
3 Description....1
4 Pin Configuration and Functions....2
5 Specifications....5
5.1 Absolute Maximum Ratings....5
5.2 ESD Ratings....5
5.3 Recommended Operating Conditions....5
5.4 Thermal Information: LMC6061....6
5.5 Thermal Information: LMC6062....6
5.6 Thermal Information: LMC6064....6
5.7 Electrical Characteristics....7
5.8 Typical Characteristics....11
6 Application and Implementation....15
6.1 Applications Information....15
6.2 Typical Applications....17
6.3 Layout....18
7 Device and Documentation Support....20
7.1 Receiving Notification of Documentation Updates....20
7.2 Support Resources....20
7.3 Trademarks....20
7.4 Electrostatic Discharge Caution....20
7.5 Glossary....20
8 Revision History....20
9 Mechanical, Packaging, and Orderable Information....21

4 Pin Configuration and Functions

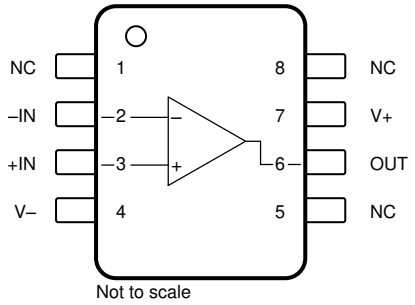

Figure 4-1. LMC6061: D Package, 8-Pin SOIC (Top View)

Table 4-1. Pin Functions: LMC6061

PIN		TYPE	DESCRIPTION
NAME	NO.		
–IN	2	Input	Inverting input
+IN	3	Input	Noninverting input
NC	1, 8, 5	_	No connection (can be left floating)
OUT	6	Output	Output
V–	4	Power	Negative (lowest) power supply
V+	7	Power	Positive (highest) power supply

Copyright © 2025 Texas Instruments Incorporated

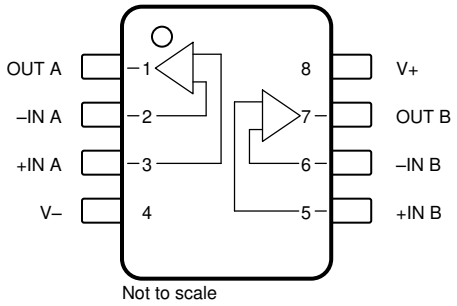

Figure 4-2. LMC6062: D Package, 8-Pin SOIC and P Package, 8-Pin PDIP (Top View)

Table 4-2. Pin Functions: LMC6062

PIN		TYPE	DESCRIPTION
NAME	NO.		
–IN A	2	Input	Inverting input channel A
–IN B	6	Input	Inverting input channel B
+IN A	3	Input	Noninverting input channel A
+IN B	5	Input	Noninverting input channel B
OUT A	1	Output	Output channel A
OUT B	7	Output	Output channel B
V–	4	Power	Negative supply
V+	8	Power	Positive supply

Copyright © 2025 Texas Instruments Incorporated

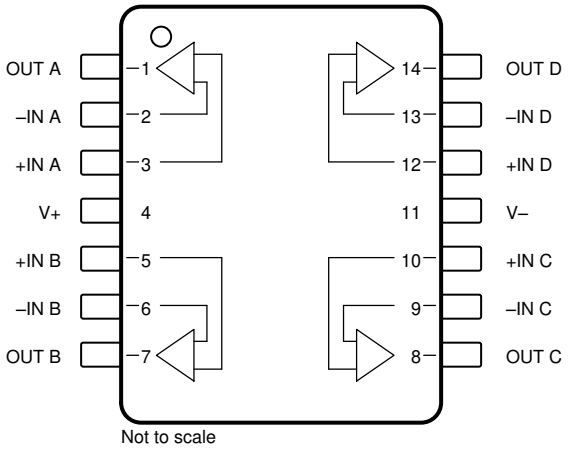

Figure 4-3. LMC6064: D Package, 14-Pin SOIC (Top View)

Table 4-3. Pin Functions: LMC6064

PIN		TYPE	DESCRIPTION
NAME	NO.		
–IN A	2	Input	Inverting input channel A
–IN B	6	Input	Inverting input channel B
–IN C	9	Input	Inverting input channel C
–IN D	13	Input	Inverting input channel D
+IN A	3	Input	Noninverting input channel A
+IN B	5	Input	Noninverting input channel B
+IN C	10	Input	Noninverting input channel C
+IN D	12	Input	Noninverting input channel D
OUT A	1	Output	Output channel A
OUT B	7	Output	Output channel B
OUT C	8	Output	Output channel C
OUT D	14	Output	Output channel D
V–	11	Power	Negative supply
V+	4	Power	Positive supply

Copyright © 2025 Texas Instruments Incorporated

5 Specifications

5.1 Absolute Maximum Ratings

over operating free-air temperature range (unless otherwise noted)[1] [2]

			MIN	MAX	UNIT
	Differential input voltage			±Supply voltage	V
	Voltage at input/output pin		(V–) – 0.3	(V+) + 0.3	V
V_S	Supply voltage, V_S = (V+) – (V–)			16	V
I_{SC}	Output short circuit current	To V+		See[3]	
		To V–		See[4]	
	Current	At input pin		±10	mA
		At output pin		±30	
		At power supply pin		40	
	Power dissipation			See[5]	
	Lead temperature (soldering, 10s)			260	°C
T_J	Junction temperature			150	°C
T_{stg}	Storage temperature		–65	150	°C

(1) Operation outside the *Absolute Maximum Ratings* may cause permanent device damage. *Absolute Maximum Ratings* do not imply functional operation of the device at these or any other conditions beyond those listed under *Recommended Operating Conditions*. If used outside the *Recommended Operating Conditions* but within the *Absolute Maximum Ratings*, the device may not be fully functional, and this may affect device reliability, functionality, performance, and shorten the device lifetime.
(2) If Military/Aerospace specified devices are required, please contact the TI Sales Office/Distributors for availability and specifications.
(3) Do not connect output to V+, when V+ is greater than 13V or reliability can be adversely affected.
(4) Applies to both single-supply and split-supply operation. Continuous short circuit operation at elevated ambient temperature can result in exceeding the maximum allowed junction temperature of 150°C. Output currents in excess of ±30mA over long term can adversely affect reliability.
(5) The maximum power dissipation is a function of $T_{J(Max)}$, θ_{JA}, and T_A. The maximum allowable power dissipation at any ambient temperature is $P_D = (T_{J(Max)} - T_A) / \theta_{JA}$

5.2 ESD Ratings

			VALUE	UNIT
$V_{(ESD)}$	Electrostatic discharge	Human-body model (HBM), per ANSI/ESDA/JEDEC JS-001[1]	±2000	V

(1) JEDEC document JEP155 states that 500V HBM allows safe manufacturing with a standard ESD control process.

5.3 Recommended Operating Conditions

over operating free-air temperature range (unless otherwise noted)

			MIN	NOM	MAX	UNIT
V_S	Supply voltage, V_S = (V+) – (V–)	Single supply	4.5		36	V
		Dual supply	±2.25		±18	
	Specified temperature		–40		125	°C
	Power dissipation				See[1]	

(1) To operate the device at elevated temperatures, derate the device based on thermal resistance θ_{JA} with $P_D = (T_J - T_A) / \theta_{JA}$.

5.4 Thermal Information: LMC6061

THERMAL METRIC[1]		LMC6061 D (SOIC) 8 PINS	UNIT
$R_{\theta JA}$	Junction-to-ambient thermal resistance	193.0	°C/W
$R_{\theta JC(top)}$	Junction-to-case(top) thermal resistance	57.9	°C/W
$R_{\theta JB}$	Junction-to-board thermal resistance	62.3	°C/W
ψ_{JT}	Junction-to-top characterization parameter	10.0	°C/W
ψ_{JB}	Junction-to-board characterization parameter	61.5	°C/W
$R_{\theta JC(bot)}$	Junction-to-case(bottom) thermal resistance	N/A	°C/W

(1) For more information about traditional and new thermal metrics, see the *Semiconductor and IC Package Thermal Metrics* application report.

5.5 Thermal Information: LMC6062

THERMAL METRIC[1]		LMC6062 D (SOIC) 8 PINS	LMC6062 P (PDIP) 8 PINS	UNIT
$R_{\theta JA}$	Junction-to-ambient thermal resistance	193.0	115.0	°C/W
$R_{\theta JC(top)}$	Junction-to-case(top) thermal resistance	52.0	59.2	°C/W
$R_{\theta JB}$	Junction-to-board thermal resistance	56.9	43.2	°C/W
ψ_{JT}	Junction-to-top characterization parameter	6.8	25.1	°C/W
ψ_{JB}	Junction-to-board characterization parameter	56.1	42.3	°C/W
$R_{\theta JC(bot)}$	Junction-to-case(bottom) thermal resistance	N/A	N/A	°C/W

(1) For more information about traditional and new thermal metrics, see the *Semiconductor and IC Package Thermal Metrics* application report.

5.6 Thermal Information: LMC6064

THERMAL METRIC[1]		LMC6064 D (SOIC) 14 PINS	UNIT
$R_{\theta JA}$	Junction-to-ambient thermal resistance	126.0	°C/W
$R_{\theta JC(top)}$	Junction-to-case(top) thermal resistance	34.6	°C/W
$R_{\theta JB}$	Junction-to-board thermal resistance	34.3	°C/W
ψ_{JT}	Junction-to-top characterization parameter	4.7	°C/W
ψ_{JB}	Junction-to-board characterization parameter	33.7	°C/W
$R_{\theta JC(bot)}$	Junction-to-case(bottom) thermal resistance	N/A	°C/W

(1) For more information about traditional and new thermal metrics, see the *Semiconductor and IC Package Thermal Metrics* application report.

Copyright © 2025 Texas Instruments Incorporated

5.7 Electrical Characteristics

at $T_J = T_A$ = +25°C, V+ = 5V, V– = 0V, V_{CM} = 1.5V, V_{OUT} = 2.5V, and R_L > 1MΩ connected to V+ / 2 (unless otherwise noted)

PARAMETER		TEST CONDITIONS		MIN	TYP	MAX	UNIT
OFFSET VOLTAGE							
V_{OS}	Input offset voltage	LMC606xAI			±100	±350	μV
			T_A = –40°C to +85°C			±900	
		LMC606xI			±100	±800	
			T_A = –40°C to +85°C			±1300	
dV_{OS}/dT	Input offset voltage drift	T_A = –40°C to +85°C			1		μV/°C
PSRR	Power supply rejection ratio	Positive 5V ≤ V+ ≤ 15V, V_{OUT} = 2.5V,	LMC606xAI	75	85		dB
			LMC606xAI T_A = –40°C to +85°C	72			
			LMC606xI	66	85		
			LMC606xI T_A = –40°C to +85°C	63			
		Negative –10V ≤ V+ ≤ 0V	LMC606xAI	84	100		
			LMC606xAI T_A = –40°C to +85°C	81			
			LMC606xI	74	100		
			LMC606xI T_A = –40°C to +85°C	71			
INPUT BIAS CURRENT							
I_B	Input bias current				±10		fA
		T_A = –40°C to +85°C				±4	pA
I_{OS}	Input offset current				±5		fA
		T_A = –40°C to +85°C				±4	pA
NOISE							
e_n	Input voltage noise density	f = 1kHz			83		nV/√Hz
i_n	Input current noise density	f = 1kHz			12.5		fA/√Hz
THD	Total Harmonic Distortion	f= 1kHz, G = –5V/V, R_L = 100kΩ, V_{OUT} = $2V_{pp}$, V_S = ±5V			0.01		%
INPUT VOLTAGE							
V_{CM}	Common-mode voltage	To positive rail V+ = 15V and V+ = 5V, CMRR > 60dB			(V+) – 1.9	(V+) – 2.3	V
			T_A = –40°C to +85°C			(V+) – 2.5	
		To negative rail V+ = 15V and V+ = 5V, CMRR > 60dB		– 0.1	– 0.4		
			T_A = –40°C to +85°C	0			
CMRR	Common-mode rejection ratio	V+ = 15V, 0V ≤ V_{CM} ≤ 12V	LMC606xAI	75	85		dB
			LMC606xAI, T_A = –40°C to +85°C	72			
			LMC606xI	66	85		
			LMC606xI, T_A = –40°C to +85°C	63			
INPUT IMPEDANCE							
R_{IN}	Input resistance				>10		TΩ

5.7 Electrical Characteristics (continued)

at $T_J = T_A$ = +25°C, V+ = 5V, V– = 0V, V_{CM} = 1.5V, V_{OUT} = 2.5V, and R_L > 1MΩ connected to V+ / 2 (unless otherwise noted)

PARAMETER		TEST CONDITIONS		MIN	TYP	MAX	UNIT
OPEN-LOOP GAIN							
A_{OL}	Open-loop voltage gain	Sourcing, V+ = 15V, V_{CM} = 7.5V, 7.5V ≤ V_O ≤ 11.5V, R_L = 100kΩ	LMC606xAI	300	4000		V/mV
			LMC606xAI, T_A = –40°C to +85°C	200			
			LMC606xI	300	4000		
			LMC606xI, T_A = –40°C to +85°C	200			
		Sinking, V+ = 15V, V_{CM} = 7.5V, 2.5V ≤ V_O ≤ 7.5V, R_L = 100kΩ	LMC606xAI	180	3000		
			LMC606xAI, T_A = –40°C to +85°C	100			
			LMC606xI	90	3000		
			LMC606xI, T_A = –40°C to +85°C	60			
		Sourcing, V+ = 15V, V_{CM} = 7.5V, 7.5V ≤ V_O ≤ 11.5V, R_L = 25kΩ	LMC606xAI	300	3000		
			LMC606xAI, T_A = –40°C to +85°C	150			
			LMC606xI	200	3000		
			LMC606xI, T_A = –40°C to +85°C	80			
		Sinking, V_S = 15V, V_{CM} = 7.5V, 2.5V ≤ V_O ≤ 7.5V, R_L = 25kΩ	LMC606xAI	100	2000		
			LMC606xAI, T_A = –40°C to +85°C	50			
			LMC606xI	70	2000		
			LMC606xI, T_A = –40°C to +85°C	35			
FREQUENCY RESPONSE							
GBW	Gain bandwidth product				100		kHz
SR	Slew rate	V+ = 15V, 10V step, g = 1	LMC606xAI	20	35		V/ms
			LMC606xAI, –40°C to +85°C	10			
			LMC606xI	15	35		
			LMC606xI, –40°C to +85°C	7			
	Crosstalk	Dual and quad channel, V+ = 15V, R_L = 100kΩ, f = 100Hz, V_{OUT} = $12V_{pp}$			155		dB

Copyright © 2025 Texas Instruments Incorporated

5.7 Electrical Characteristics (continued)

at $T_J = T_A = +25°C$, V+ = 5V, V– = 0V, $V_{CM} = 1.5V$, $V_{OUT} = 2.5V$, and $R_L > 1M\Omega$ connected to V+ / 2 (unless otherwise noted)

PARAMETER		TEST CONDITIONS		MIN	TYP	MAX	UNIT
OUTPUT							
V_O	Voltage output swing	Positive rail V+ = 5V, R_L = 100kΩ	LMC606xAI	4.990	4.995		V
			LMC606xAI, T_A = –40°C to +85°C	4.980			
			LMC606xI	4.950	4.995		
			LMC606xI, T_A = –40°C to +85°C	4.925			
		Negative rail V+ = 5V, R_L = 100kΩ	LMC606xAI		0.005	0.010	
			LMC606xAI, T_A = –40°C to +85°C			0.020	
			LMC606xI		0.005	0.050	
			LMC606xI, T_A = –40°C to +85°C			0.075	
		Positive rail V+ = 5V, R_L = 25kΩ	LMC606xAI	4.975	4.990		
			LMC606xAI, T_A = –40°C to +85°C	4.965			
			LMC606xI	4.950	4.990		
			LMC606xI, T_A = –40°C to +85°C	4.850			
		Negative rail V+ = 5V, R_L = 25kΩ	LMC606xAI		0.010	0.020	
			LMC606xAI, T_A = –40°C to +85°C			0.035	
			LMC606xI		0.010	0.050	
			LMC606xI, T_A = –40°C to +85°C			0.150	
		Positive rail V+ = 15V, R_L = 100kΩ	LMC606xAI	14.975	14.990		
			LMC606xAI, T_A = –40°C to +85°C	14.965			
			LMC606xI	14.950	14.990		
			LMC606xI, T_A = –40°C to +85°C	14.925			
		Negative rail V+ = 15V, R_L = 100kΩ	LMC606xAI		0.010	0.025	
			LMC606xAI, T_A = –40°C to +85°C			0.035	
			LMC606xI		0.010	0.050	
			LMC606xI, T_A = –40°C to +85°C			0.075	
		Positive rail V+ = 15V, R_L = 25kΩ	LMC606xAI	14.90	14.965		
			LMC606xAI, T_A = –40°C to +85°C	14.850			
			LMC606xI	14.850	14.965		
			LMC606xI, T_A = –40°C to +85°C	14.800			
		Negative rail V+ = 15V, R_L = 25kΩ	LMC606xAI		0.025	0.050	
			LMC606xAI, T_A = –40°C to +85°C			0.150	
			LMC606xI		0.025	0.100	
			LMC606xI, T_A = –40°C to +85°C			0.200	

Copyright © 2025 Texas Instruments Incorporated

5.7 Electrical Characteristics (continued)

at $T_J = T_A$ = +25°C, V+ = 5V, V– = 0V, V_{CM} = 1.5V, V_{OUT} = 2.5V, and R_L > 1MΩ connected to V+ / 2 (unless otherwise noted)

PARAMETER		TEST CONDITIONS		MIN	TYP	MAX	UNIT
I_{SC}	Short-circuit current	Sourcing V_{OUT} = 0V	LMC606xAI	16	22		mA
			LMC606xAI, T_A = –40°C to +85°C	10			
			LMC606xI	13	22		
			LMC606xI, T_A = –40°C to +85°C	8			
		Sinking V_{OUT} = 5V	LMC606xAI	16	21		
			LMC606xAI, T_A = –40°C to +85°C	8			
			LMC606xI	16	21		
			LMC606xI, T_A = –40°C to +85°C	8			
		Sourcing V+ = 15V, V_{OUT} = 0V	LMC606xAI	15	25		
			LMC606xAI, T_A = –40°C to +85°C	10			
			LMC606xI	15	25		
			LMC606xI, T_A = –40°C to +85°C	10			
		Sinking V+ = 15V, V_{OUT} = 13V(1)	LMC606xAI	20	26		
			LMC606xAI, T_A = –40°C to +85°C	8			
			LMC606xI	20	26		
			LMC606xI, T_A = –40°C to +85°C	8			
POWER SUPPLY							
I_Q	Quiescent current per amplifier	LMC6061AI, V_{OUT} = 1.5V			20	24	µA
			T_A = –40°C to +85°C			32	
		LMC6061I, V_{OUT} = 1.5V			20	32	
			T_A = –40°C to +85°C			40	
		LMC6062AI and LMC6064AI, V_{OUT} = 1.5V			16	19	
			T_A = –40°C to +85°C			23	
		LMC6062I and LMC6064I, V_{OUT} = 1.5V			16	23	
			T_A = –40°C to +85°C			28	
		LMC6061AI, V_{OUT} = 7.5V, V+ = 15V			24	30	
			T_A = –40°C to +85°C			38	
		LMC6061I, V_{OUT} = 7.5V, V+ = 15V			24	40	
			T_A = –40°C to +85°C			48	
		LMC6062AI and LMC6064AI, V_{OUT} = 7.5V, V+ = 15V			20	23.5	
			T_A = –40°C to +85°C			27.5	
		LMC6062I and LMC6064I, V_{OUT} = 7.5V, V+ = 15V			20	28.5	
			T_A = –40°C to +85°C			33	

(1) Do not connect output to V+, when V+ is greater than 13V or reliability can be adversely affected.

Copyright © 2025 Texas Instruments Incorporated

5.8 Typical Characteristics

at V_S = ±7.5V and T_A = 25°C (unless otherwise specified)

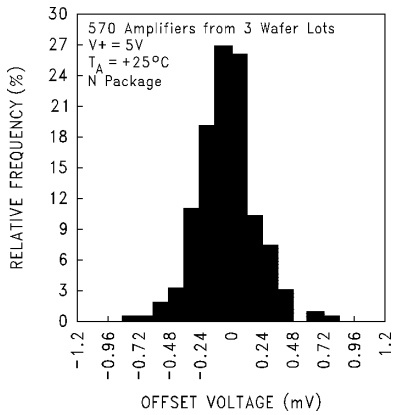

T_A = 25°C

Figure 5-1. Distribution of Input Offset Voltage

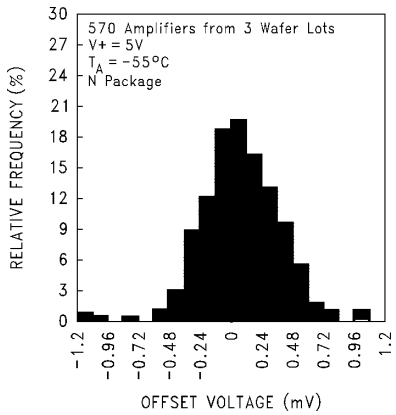

T_A = −55°C

Figure 5-2. Distribution of Input Offset Voltage

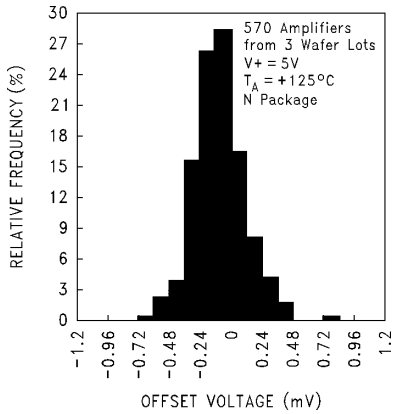

T_A = 125°C

Figure 5-3. Distribution of Input Offset Voltage

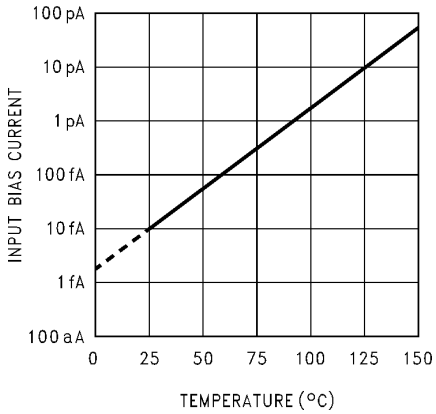

Figure 5-4. Input Bias Current vs Temperature

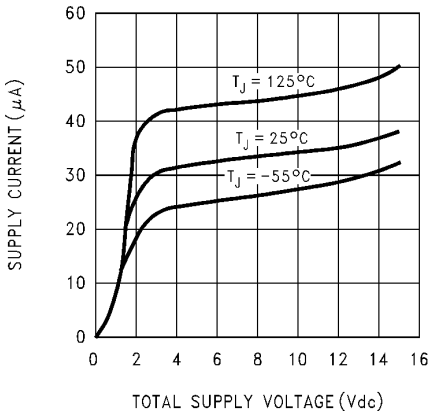

Figure 5-5. Supply Current vs Supply Voltage

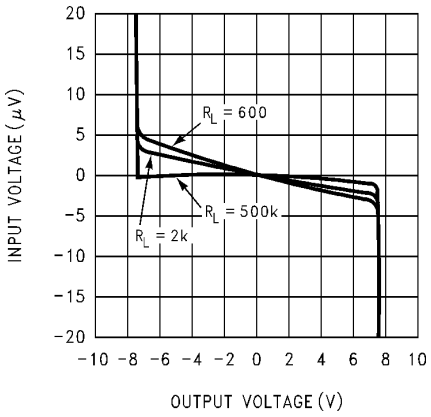

Figure 5-6. Input Voltage vs Output Voltage

5.8 Typical Characteristics (continued)

at V_S = ±7.5V and T_A = 25°C (unless otherwise specified)

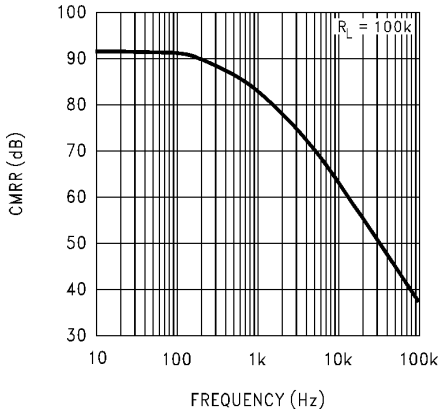

Figure 5-7. Common Mode Rejection Ratio vs Frequency

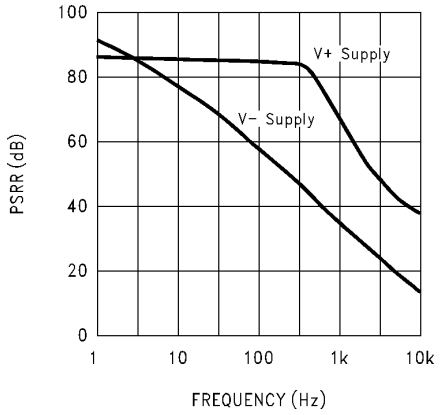

Figure 5-8. Power Supply Rejection Ratio vs Frequency

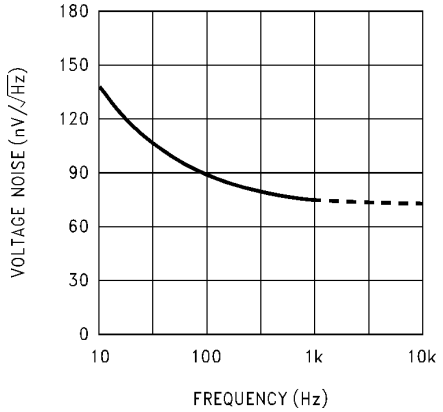

Figure 5-9. Input Voltage Noise vs Frequency

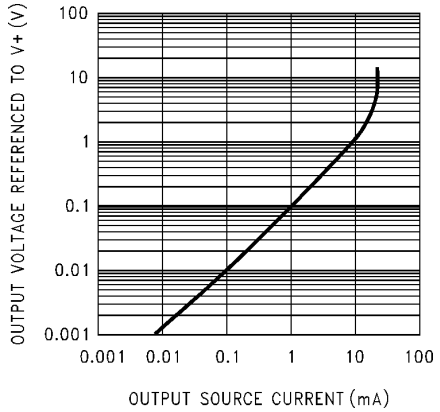

Figure 5-10. Output Characteristics Sourcing Current

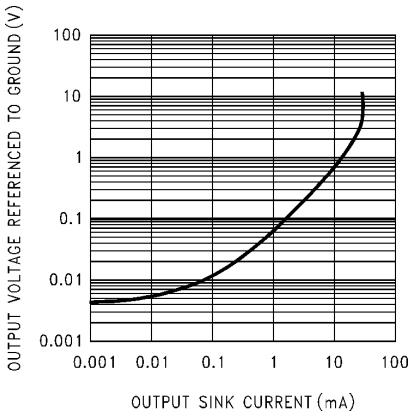

Figure 5-11. Output Characteristics Sinking Current

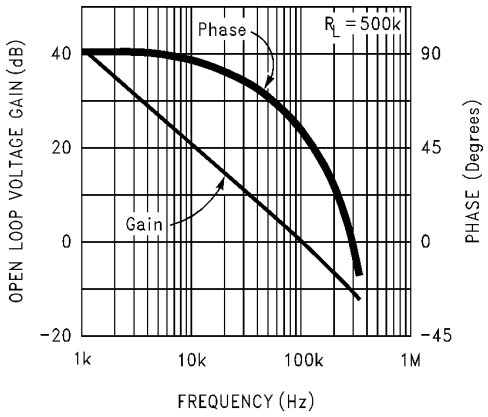

T_A = −55°C to +125°C

Figure 5-12. Gain and Phase Response vs Temperature

Copyright © 2025 Texas Instruments Incorporated

5.8 Typical Characteristics (continued)

at V_S = ±7.5V and T_A = 25°C (unless otherwise specified)

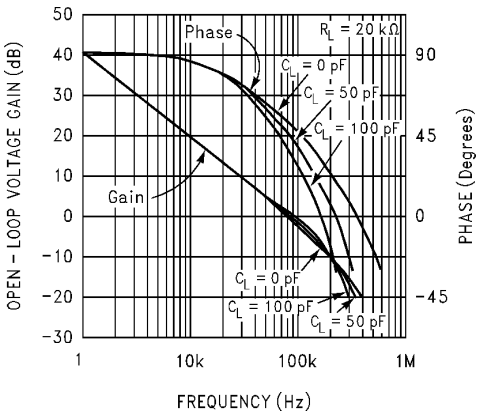

R_L = 20kΩ

Figure 5-13. Gain and Phase Response vs Capacitive Load

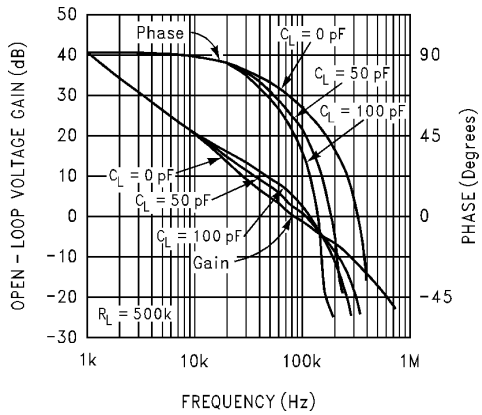

R_L = 500kΩ

Figure 5-14. Gain and Phase Response vs Capacitive Load

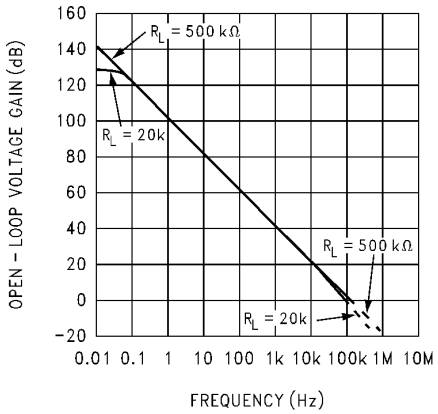

Figure 5-15. Open-Loop Frequency Response

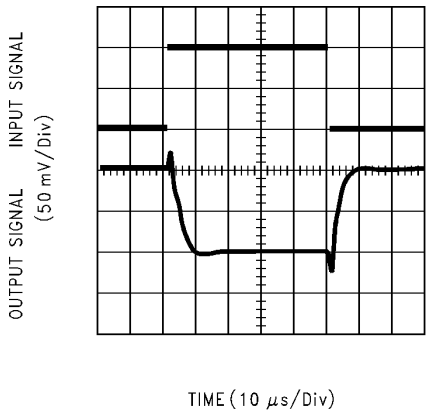

Figure 5-16. Inverting Small-Signal Pulse Response

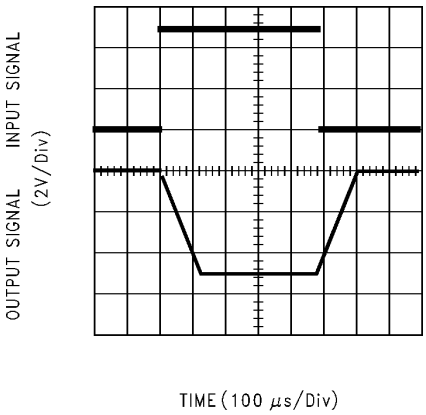

Figure 5-17. Inverting Large-Signal Pulse Response

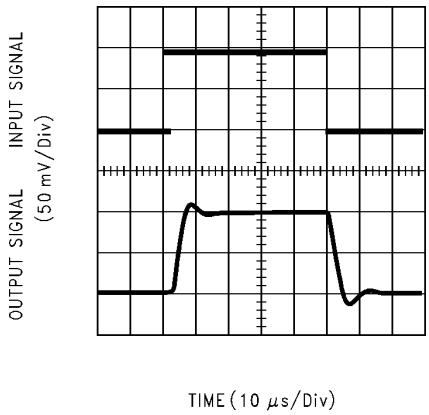

Figure 5-18. Noninverting Small-Signal Pulse Response

5.8 Typical Characteristics (continued)

at V_S = ±7.5V and T_A = 25°C (unless otherwise specified)

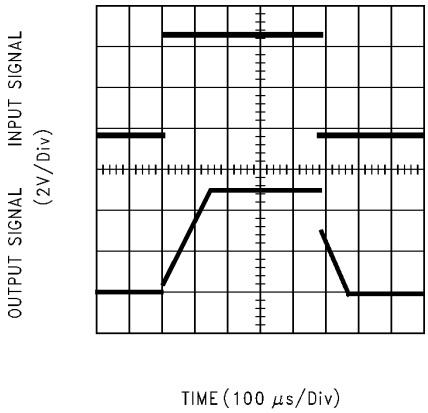

Figure 5-19. Noninverting Large-Signal Pulse Response

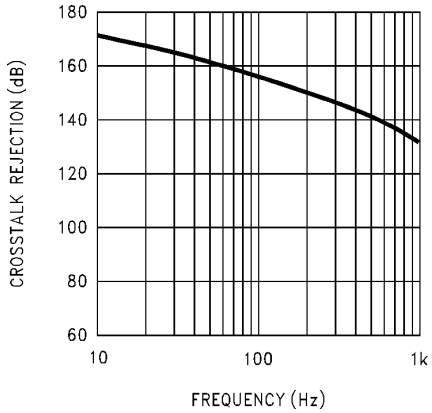

Figure 5-20. Crosstalk Rejection vs Frequency

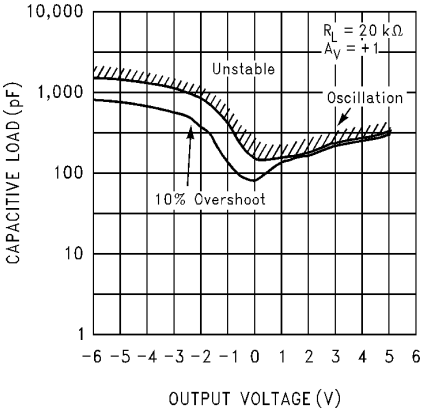

R_L = 20kΩ

Figure 5-21. Stability vs Capacitive Load

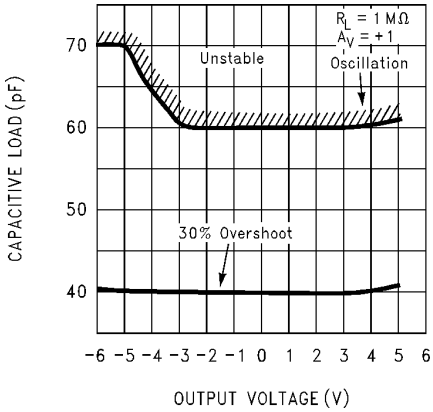

R_L = 1MΩ

Figure 5-22. Stability vs Capacitive Load

Copyright © 2025 Texas Instruments Incorporated

6 Application and Implementation

Note

Information in the following applications sections is not part of the TI component specification, and TI does not warrant its accuracy or completeness. TI's customers are responsible for determining suitability of components for their purposes, as well as validating and testing their design implementation to confirm system functionality.

6.1 Applications Information

6.1.1 Amplifier Topology

The LMC606x incorporate a novel op amp design topology that enables rail-to-rail output swing even when driving a large load. Special compensation design techniques are incorporated to maintain stability over a wider range of operating conditions than traditional micropower op amps. These features make the LMC606x both easier to design with, and provide higher speed than products typically found in this ultra-low power class.

6.1.2 Compensating For Input Capacitance

Large values of feedback resistance are quite common for amplifiers with ultra-low input current, like the LMC606x. Although the LMC606x is highly stable over a wide range of operating conditions, take certain precautions to achieve the desired pulse response when a large feedback resistor is used. Large feedback resistors and even small values of input capacitance, due to transducers, photodiodes, and circuit board parasitics, reduce phase margins.

When high input impedances are demanded, guarding of the LMC606x is suggested. Guarding input lines can not only reduce leakage, but also lower stray input capacitance. See also Section 6.3.1.1.

The effect of input capacitance can be compensated for by adding a capacitor. Place a capacitor, C_F, around the feedback resistor (as in Figure 6-1) such that:

$$\frac{1}{2\pi R1C_{IN}} \geq \frac{1}{2\pi R2C_F} \tag{1}$$

where

$$R1C_{IN} \leq R2C_F \tag{2}$$

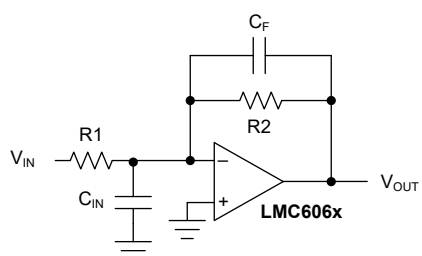

Figure 6-1. Canceling the Effect of Input Capacitance

The exact value of C_{IN} is often difficult to know, but C_F can be experimentally adjusted so that the desired pulse response is achieved. For a more detailed discussion on compensating for input capacitance, see the LMC660 and the LMC662.

6.1.3 Capacitive Load Tolerance

All rail-to-rail output swing operational amplifiers have voltage gain in the output stage. A compensation capacitor is normally included in this integrator stage. The frequency location of the dominate pole is affected by the resistive load on the amplifier. Capacitive load driving capability can be optimized by using an appropriate resistive load in parallel with the capacitive load (see *Section 5.8*).

Direct capacitive loading reduces the phase margin of many op amps. A pole in the feedback loop is created by the combination of the output impedance of the op amp and the capacitive load. This pole induces phase lag at the unity-gain crossover frequency of the amplifier resulting in either an oscillatory or underdamped pulse response. Figure 6-2 shows that with a few external components, op amps can easily indirectly drive capacitive loads.

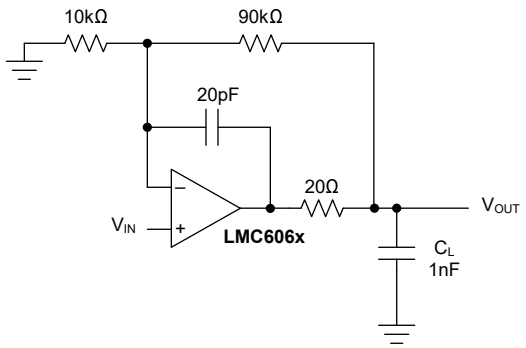

Figure 6-2. LMC606x Noninverting Gain of 10 Amplifier Compensated to Handle Capacitive Loads

In the circuit of Figure 6-2, R1 and C1 serve to counteract the loss of phase margin by feeding the high-frequency component of the output signal back to the inverting input of the amplifier, thereby preserving phase margin in the overall feedback loop.

Capacitive load driving capability is enhanced by using a pullup resistor to V+ (Figure 6-3). Typically, a pullup resistor conducting 10µA or more can significantly improve capacitive load responses. The value of the pullup resistor must be determined based on the current sinking capability of the amplifier with respect to the desired output swing. The open-loop gain of the amplifier can also be affected by the pullup resistor (see *Section 5.7*).

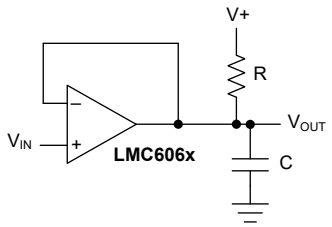

Figure 6-3. Compensating for Large Capacitive Loads With a Pullup Resistor

6.1.4 Latchup

CMOS devices tend to be susceptible to latchup due to internal parasitic silicon controlled rectifier (SCR) effects. The input and output (I/O) pins look similar to the gate of the SCR. There is a minimum current required to trigger the SCR gate lead. The LMC606x are designed to withstand 100mA surge current on the I/O pins. Use a resistive method to isolate any capacitance from supplying excess current to the I/O pins. In addition, like a SCR, there is a minimum holding current for any latchup mode. Limiting current to the supply pins also inhibits latchup susceptibility.

Copyright © 2025 Texas Instruments Incorporated

6.2 Typical Applications

6.2.1 Instrumentation Amplifier

The extremely high input impedance, and low power consumption, of the LMC606x make them an excellent choice for applications that require battery-powered instrumentation amplifiers. Examples of these types of applications are portable pH probes, analytic medical instruments, magnetic field detectors, gas detectors, and silicon-based pressure transducers.

Figure 6-4 shows an instrumentation amplifier that features high differential and common mode input resistance (> 10^{14}Ω), 0.01% gain accuracy at A_V = 100, excellent CMRR with 1kΩ imbalance in bridge source resistance. Input current is less than 100fA and offset drift is less than 2.5μV/°C. R2 provides a simple means of adjusting gain over a wide range without degrading CMRR. R7 is an initial trim used to maximize CMRR without using super precision matched resistors. For good CMRR over temperature, use low-drift resistors.

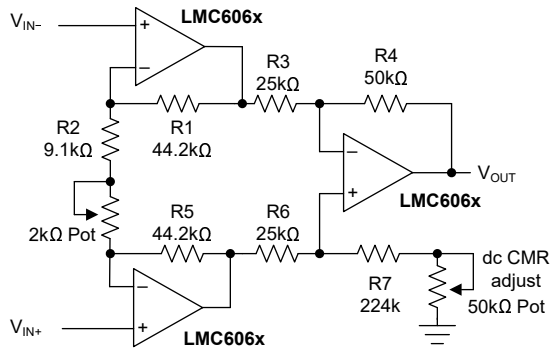

Figure 6-4. Instrumentation Amplifier

If R1 = R5, R3 = R6, and R4 = R7, then

$$\frac{V_{OUT}}{V_{IN}} = \frac{R4}{R3}\left(\frac{R2 + 2R1}{R2}\right) \tag{3}$$

and A_V ≅ 100 for the circuit shown in Figure 6-4 (R2 = 9.1kΩ). Note that $V_{IN} = V_{IN+} - V_{IN-}$.

6.2.2 Low-Leakage Sample-and-Hold

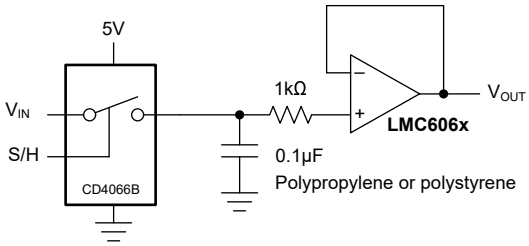

Figure 6-5. Low-Leakage Sample-and-Hold

6.2.3 1Hz Square-Wave Oscillator

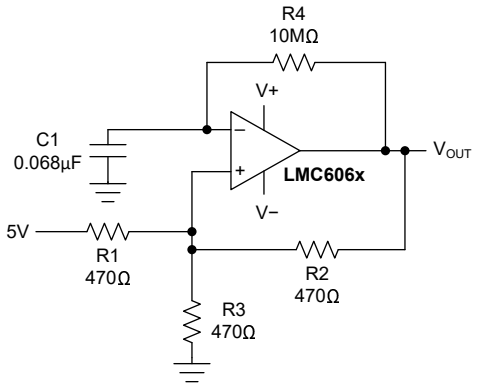

Figure 6-6. 1Hz Square-Wave Oscillator

6.3 Layout

6.3.1 Layout Guidelines

6.3.1.1 Printed Circuit Board Layout For High Impedance Work

Generally, any circuit that must operate with less than 1000pA of leakage current requires special layout of the printed circuit board (PCB). To take advantage of the ultra-low bias current of the LMC606x, typically less than 10fA, having an excellent layout is essential. Fortunately, the techniques used to obtain low leakages are quite simple. First, do not ignore the surface leakage of the PCB, even though the leakage can sometimes appear acceptably low. Under conditions of high humidity, dust, or contamination, the surface leakage can be appreciable.

To minimize the effect of any surface leakage, lay out a ring of foil completely surrounding the LMC606x inputs and the terminals of capacitors, diodes, conductors, resistors, relay terminals, and so on, connected to the op amp inputs, as in Figure 6-11. To have a significant effect, place guard rings on both the top and bottom of the PCB. Then connect this foil to a voltage that is at the same voltage as the amplifier inputs, because no leakage current can flow between two points at the same potential. For example, a PCB trace-to-pad resistance of $10^{12}\Omega$, which is normally considered a very large resistance, can leak 5pA if the trace is a 5V bus adjacent to the pad of the input. This leak can cause a 100 times degradation from the LMC606x actual performance. However, if a guard ring is held within 5mV of the inputs, then even a resistance of $10^{11}\Omega$ causes only 0.05pA of leakage current. See Figure 6-7 to Figure 6-9 for typical connections of guard rings for standard op amp configurations.

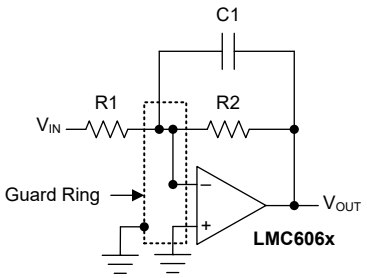

Figure 6-7. Typical Connections of Guard Rings: Inverting Amplifier

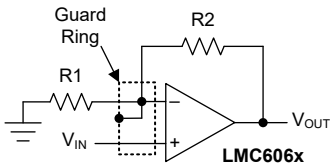

Figure 6-8. Typical Connections of Guard Rings: Noninverting Amplifier

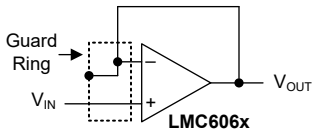

Figure 6-9. Typical Connections of Guard Rings: Follower

Copyright © 2025 Texas Instruments Incorporated

When laying out a PCB for the sake of just a few circuits is not practical, the following technique is even better than a guard ring. Do not insert the input pin of the amplifier into the PCB at all. Instead, bend the pin up in the air, and use only air as an insulator. Air is an excellent insulator. In this case, you forgo some of the advantages of PCB construction, but the advantages are sometimes well worth the effort of using point-to-point up-in-the-air wiring. Figure 6-10 shows an example of air wiring.

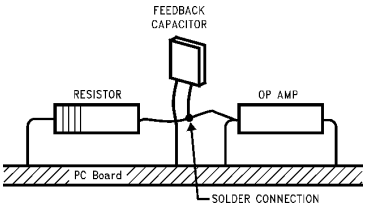

Note: Input pins are lifted out of the PCB and soldered directly to components. All other pins are connected to the PCB.

Figure 6-10. Air Wiring

6.3.2 Layout Example

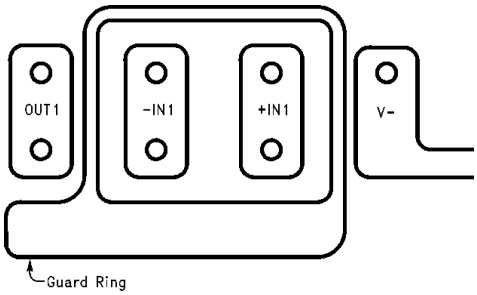

Figure 6-11. Example of Guard Ring in PCB Layout

7 Device and Documentation Support

TI offers an extensive line of development tools. Tools and software to evaluate the performance of the device, generate code, and develop solutions are listed below.

7.1 Receiving Notification of Documentation Updates

To receive notification of documentation updates, navigate to the device product folder on ti.com. Click on *Notifications* to register and receive a weekly digest of any product information that has changed. For change details, review the revision history included in any revised document.

7.2 Support Resources

TI E2E™ support forums are an engineer's go-to source for fast, verified answers and design help — straight from the experts. Search existing answers or ask your own question to get the quick design help you need.

Linked content is provided "AS IS" by the respective contributors. They do not constitute TI specifications and do not necessarily reflect TI's views; see TI's Terms of Use.

7.3 Trademarks

TI E2E™ is a trademark of Texas Instruments.
All trademarks are the property of their respective owners.

7.4 Electrostatic Discharge Caution

This integrated circuit can be damaged by ESD. Texas Instruments recommends that all integrated circuits be handled with appropriate precautions. Failure to observe proper handling and installation procedures can cause damage.

ESD damage can range from subtle performance degradation to complete device failure. Precision integrated circuits may be more susceptible to damage because very small parametric changes could cause the device not to meet its published specifications.

7.5 Glossary

TI Glossary	This glossary lists and explains terms, acronyms, and definitions.

8 Revision History

NOTE: Page numbers for previous revisions may differ from page numbers in the current version.

Changes from Revision D (March 2013) to Revision E (March 2025) **Page**

- Added LMC6061 and LMC6064 and related content to this data sheet....1
- Deleted LMC6061 and LMC6064 PDIP content....1
- Added application circuit....1
- Added *Pin Configuration and Functions* 2
- Updated pin names in *Pin Configuration and Functions* 2
- Added *ESD Ratings* 5
- Deleted notes 1 and 2 from *Recommended Operating Conditions* 5
- Added *Thermal Information* 6
- Updated to combine ac and dc *Electrical Characteristics* 7
- Updated parameter names and symbols....7
- Deleted notes 1, 2, and 3 from dc *Electrical Characteristics* 7
- Changed input current noise from 0.2fA/√Hz to 12.5fA/Hz....7
- Moved note 4 conditions from dc *Electrical Characteristics* to open-loop voltage gain test conditions....7
- Changed open-loop gain for R_L = 100kΩ (sourcing) from 400V/mV to 300V/mV for LMC606xAI....7
- Changed open-loop gain for R_L = 100kΩ (sourcing, T_A = –40°C to +85°C) from 300V/mV to 200V/mV for LMC606xAI....7
- Changed open-loop gain for RL = 25kΩ (sourcing) from 400V/mV to 300V/mV for LMC606xAI....7
- Deleted notes 1, 2, and 3 from ac *Electrical Characteristics* 7
- Moved note 4 conditions from ac *Electrical Characteristics* to slew rate test conditions....7

Copyright © 2025 Texas Instruments Incorporated

- Moved note 5 conditions from ac *Electrical Characteristics* to crosstalk test conditions.....7
- Change supply current parameter name to quiescent current per amplifier.....7
- Updated *Amplifier Topology* 15

Changes from Revision C (March 2013) to Revision D (March 2013)	Page
• Changed layout of National Data Sheet to TI format	17

9 Mechanical, Packaging, and Orderable Information

The following pages include mechanical, packaging, and orderable information. This information is the most current data available for the designated devices. This data is subject to change without notice and revision of this document. For browser-based versions of this data sheet, refer to the left-hand navigation.

PACKAGING INFORMATION

Orderable part number	Status (1)	Material type (2)	Package | Pins	Package qty | Carrier	RoHS (3)	Lead finish/ Ball material (4)	MSL rating/ Peak reflow (5)	Op temp (°C)	Part marking (6)
LMC6061AIM/NOPB	Obsolete	Production	SOIC (D) | 8	-	-	Call TI	Call TI	-40 to 85	LMC60 61AIM
LMC6061AIMX/NOPB	Active	Production	SOIC (D) | 8	2500 | LARGE T&R	Yes	NIPDAU | SN	Level-1-260C-UNLIM	-40 to 85	(6061AI, LMC60) 61AIM
LMC6061AIMX/NOPB.A	Active	Production	SOIC (D) | 8	2500 | LARGE T&R	Yes	NIPDAU	Level-1-260C-UNLIM	-40 to 85	(6061AI, LMC60) 61AIM
LMC6061AIMX/NOPB.B	Active	Production	SOIC (D) | 8	2500 | LARGE T&R	Yes	NIPDAU	Level-1-260C-UNLIM	-40 to 85	(6061AI, LMC60) 61AIM
LMC6061IM/NOPB	Obsolete	Production	SOIC (D) | 8	-	-	Call TI	Call TI	-40 to 85	LMC60 61IM
LMC6061IMX/NOPB	Active	Production	SOIC (D) | 8	2500 | LARGE T&R	Yes	NIPDAU | SN	Level-1-260C-UNLIM	-40 to 85	(6061I, LMC60) 61IM
LMC6061IMX/NOPB.A	Active	Production	SOIC (D) | 8	2500 | LARGE T&R	Yes	NIPDAU	Level-1-260C-UNLIM	-40 to 85	(6061I, LMC60) 61IM
LMC6061IMX/NOPB.B	Active	Production	SOIC (D) | 8	2500 | LARGE T&R	Yes	NIPDAU	Level-1-260C-UNLIM	-40 to 85	(6061I, LMC60) 61IM
LMC6062AIM/NOPB	Obsolete	Production	SOIC (D) | 8	-	-	Call TI	Call TI	-40 to 85	LMC60 62AIM
LMC6062AIMX/NOPB	Active	Production	SOIC (D) | 8	2500 | LARGE T&R	Yes	NIPDAU | SN	Level-1-260C-UNLIM	-40 to 85	(6062AI, LMC60) 62AIM
LMC6062AIMX/NOPB.A	Active	Production	SOIC (D) | 8	2500 | LARGE T&R	Yes	NIPDAU	Level-1-260C-UNLIM	-40 to 85	(6062AI, LMC60) 62AIM
LMC6062AIMX/NOPB.B	Active	Production	SOIC (D) | 8	2500 | LARGE T&R	Yes	NIPDAU	Level-1-260C-UNLIM	-40 to 85	(6062AI, LMC60) 62AIM
LMC6062I MDC	Active	Production	DIESALE (Y) | 0	288 | OTHER	Yes	Call TI	Level-1-NA-UNLIM	-40 to 85	
LMC6062I-MDC.A	Active	Production	DIESALE (Y) | 0	288 | OTHER	Yes	Call TI	Level-1-NA-UNLIM	-40 to 85	
LMC6062IM/NOPB	Obsolete	Production	SOIC (D) | 8	-	-	Call TI	Call TI	-40 to 85	LMC60 62IM
LMC6062IMX/NOPB	Active	Production	SOIC (D) | 8	2500 | LARGE T&R	Yes	NIPDAU | SN	Level-1-260C-UNLIM	-40 to 85	(6062I, LMC60) 62IM
LMC6062IMX/NOPB.A	Active	Production	SOIC (D) | 8	2500 | LARGE T&R	Yes	NIPDAU	Level-1-260C-UNLIM	-40 to 85	(6062I, LMC60) 62IM

Orderable part number	Status (1)	Material type (2)	Package | Pins	Package qty | Carrier	RoHS (3)	Lead finish/ Ball material (4)	MSL rating/ Peak reflow (5)	Op temp (°C)	Part marking (6)
LMC6062IMX/NOPB.B	Active	Production	SOIC (D) | 8	2500 | LARGE T&R	Yes	NIPDAU	Level-1-260C-UNLIM	-40 to 85	(6062I, LMC60) 62IM
LMC6062IN/NOPB	Active	Production	PDIP (P) | 8	40 | TUBE	Yes	NIPDAU	Level-1-NA-UNLIM	-40 to 85	LMC6062 IN
LMC6062IN/NOPB.A	Active	Production	PDIP (P) | 8	40 | TUBE	Yes	NIPDAU	Level-1-NA-UNLIM	-40 to 85	LMC6062 IN
LMC6062IN/NOPB.B	Active	Production	PDIP (P) | 8	40 | TUBE	Yes	NIPDAU	Level-1-NA-UNLIM	-40 to 85	LMC6062 IN
LMC6064AIM/NOPB	Obsolete	Production	SOIC (D) | 14	-	-	Call TI	Call TI	-40 to 85	LMC6064 AIM
LMC6064AIMX/NOPB	Active	Production	SOIC (D) | 14	2500 | LARGE T&R	Yes	NIPDAU | SN	Level-1-260C-UNLIM	-40 to 85	(LMC6064, LMC6064A IM) AIM
LMC6064AIMX/NOPB.A	Active	Production	SOIC (D) | 14	2500 | LARGE T&R	Yes	NIPDAU	Level-1-260C-UNLIM	-40 to 85	(LMC6064, LMC6064A IM) AIM
LMC6064IM/NOPB	Obsolete	Production	SOIC (D) | 14	-	-	Call TI	Call TI	-40 to 85	LMC6064IM
LMC6064IMX/NOPB	Active	Production	SOIC (D) | 14	2500 | LARGE T&R	Yes	NIPDAU | SN	Level-1-260C-UNLIM	-40 to 85	LMC6064IM
LMC6064IMX/NOPB.A	Active	Production	SOIC (D) | 14	2500 | LARGE T&R	Yes	NIPDAU	Level-1-260C-UNLIM	-40 to 85	LMC6064IM

(1) **Status:** For more details on status, see our product life cycle.

(2) **Material type:** When designated, preproduction parts are prototypes/experimental devices, and are not yet approved or released for full production. Testing and final process, including without limitation quality assurance, reliability performance testing, and/or process qualification, may not yet be complete, and this item is subject to further changes or possible discontinuation. If available for ordering, purchases will be subject to an additional waiver at checkout, and are intended for early internal evaluation purposes only. These items are sold without warranties of any kind.

(3) **RoHS values:** Yes, No, RoHS Exempt. See the TI RoHS Statement for additional information and value definition.

(4) **Lead finish/Ball material:** Parts may have multiple material finish options. Finish options are separated by a vertical ruled line. Lead finish/Ball material values may wrap to two lines if the finish value exceeds the maximum column width.

(5) **MSL rating/Peak reflow:** The moisture sensitivity level ratings and peak solder (reflow) temperatures. In the event that a part has multiple moisture sensitivity ratings, only the lowest level per JEDEC standards is shown. Refer to the shipping label for the actual reflow temperature that will be used to mount the part to the printed circuit board.

(6) **Part marking:** There may be an additional marking, which relates to the logo, the lot trace code information, or the environmental category of the part.

Multiple part markings will be inside parentheses. Only one part marking contained in parentheses and separated by a "~" will appear on a part. If a line is indented then it is a continuation of the previous line and the two combined represent the entire part marking for that device.

Important Information and Disclaimer: The information provided on this page represents TI's knowledge and belief as of the date that it is provided. TI bases its knowledge and belief on information provided by third parties, and makes no representation or warranty as to the accuracy of such information. Efforts are underway to better integrate information from third parties. TI has taken and continues to take reasonable steps to provide representative and accurate information but may not have conducted destructive testing or chemical analysis on incoming materials and chemicals. TI and TI suppliers consider certain information to be proprietary, and thus CAS numbers and other limited information may not be available for release.

In no event shall TI's liability arising out of such information exceed the total purchase price of the TI part(s) at issue in this document sold by TI to Customer on an annual basis.

TAPE AND REEL INFORMATION

REEL DIMENSIONS

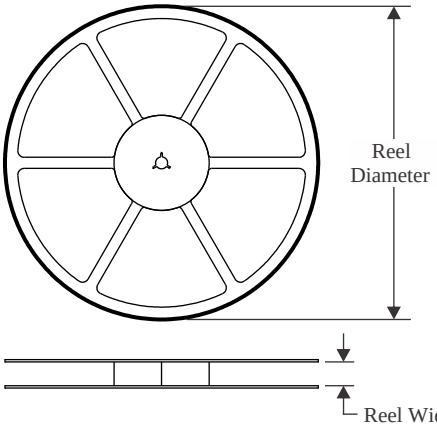

TAPE DIMENSIONS

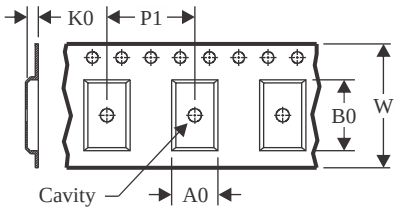

A0	Dimension designed to accommodate the component width
B0	Dimension designed to accommodate the component length
K0	Dimension designed to accommodate the component thickness
W	Overall width of the carrier tape
P1	Pitch between successive cavity centers

QUADRANT ASSIGNMENTS FOR PIN 1 ORIENTATION IN TAPE

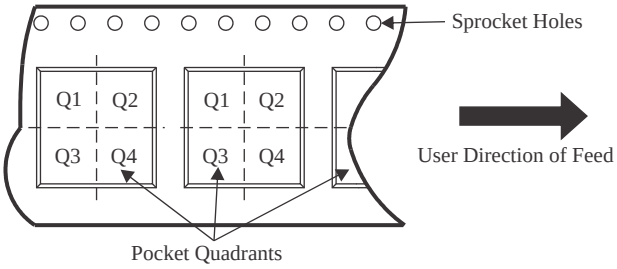

*All dimensions are nominal

Device	Package Type	Package Drawing	Pins	SPQ	Reel Diameter (mm)	Reel Width W1 (mm)	A0 (mm)	B0 (mm)	K0 (mm)	P1 (mm)	W (mm)	Pin1 Quadrant
LMC6061AIMX/NOPB	SOIC	D	8	2500	330.0	12.4	6.5	5.4	2.0	8.0	12.0	Q1
LMC6061AIMX/NOPB	SOIC	D	8	2500	330.0	12.4	6.4	5.2	2.1	8.0	12.0	Q1
LMC6061IMX/NOPB	SOIC	D	8	2500	330.0	12.4	6.5	5.4	2.0	8.0	12.0	Q1
LMC6061IMX/NOPB	SOIC	D	8	2500	330.0	12.4	6.4	5.2	2.1	8.0	12.0	Q1
LMC6062AIMX/NOPB	SOIC	D	8	2500	330.0	12.4	6.4	5.2	2.1	8.0	12.0	Q1
LMC6062AIMX/NOPB	SOIC	D	8	2500	330.0	12.4	6.5	5.4	2.0	8.0	12.0	Q1
LMC6062IMX/NOPB	SOIC	D	8	2500	330.0	12.4	6.4	5.2	2.1	8.0	12.0	Q1
LMC6062IMX/NOPB	SOIC	D	8	2500	330.0	12.4	6.5	5.4	2.0	8.0	12.0	Q1
LMC6064AIMX/NOPB	SOIC	D	14	2500	330.0	16.4	6.5	9.35	2.3	8.0	16.0	Q1
LMC6064AIMX/NOPB	SOIC	D	14	2500	330.0	16.4	6.5	9.0	2.1	8.0	16.0	Q1
LMC6064IMX/NOPB	SOIC	D	14	2500	330.0	16.4	6.5	9.0	2.1	8.0	16.0	Q1
LMC6064IMX/NOPB	SOIC	D	14	2500	330.0	16.4	6.5	9.35	2.3	8.0	16.0	Q1

TAPE AND REEL BOX DIMENSIONS

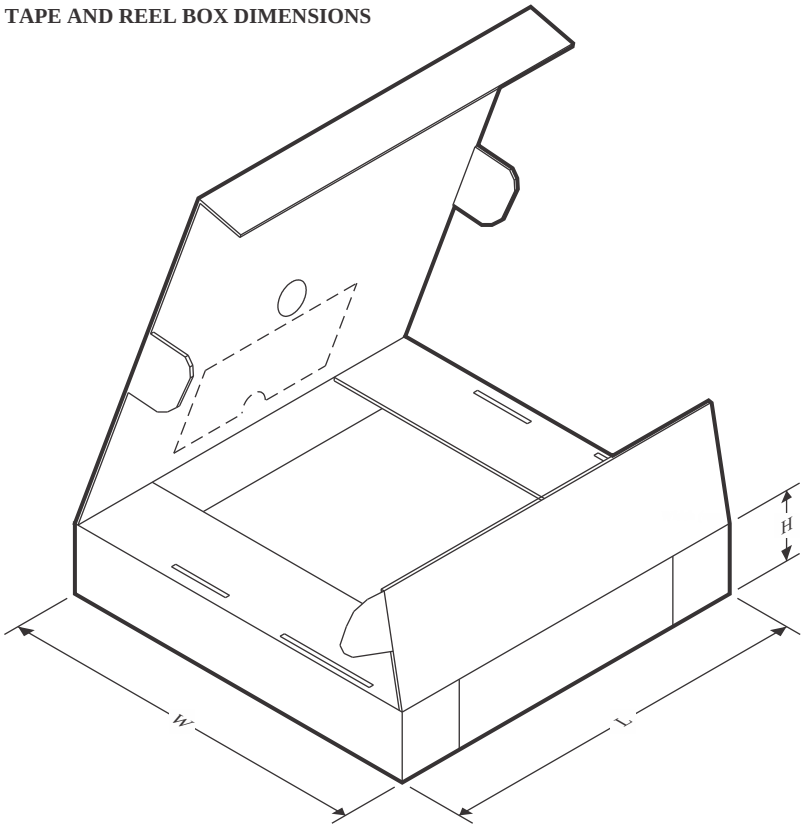

*All dimensions are nominal

Device	Package Type	Package Drawing	Pins	SPQ	Length (mm)	Width (mm)	Height (mm)
LMC6061AIMX/NOPB	SOIC	D	8	2500	367.0	367.0	35.0
LMC6061AIMX/NOPB	SOIC	D	8	2500	353.0	353.0	32.0
LMC6061IMX/NOPB	SOIC	D	8	2500	367.0	367.0	35.0
LMC6061IMX/NOPB	SOIC	D	8	2500	353.0	353.0	32.0
LMC6062AIMX/NOPB	SOIC	D	8	2500	353.0	353.0	32.0
LMC6062AIMX/NOPB	SOIC	D	8	2500	367.0	367.0	35.0
LMC6062IMX/NOPB	SOIC	D	8	2500	353.0	353.0	32.0
LMC6062IMX/NOPB	SOIC	D	8	2500	367.0	367.0	35.0
LMC6064AIMX/NOPB	SOIC	D	14	2500	367.0	367.0	35.0
LMC6064AIMX/NOPB	SOIC	D	14	2500	353.0	353.0	32.0
LMC6064IMX/NOPB	SOIC	D	14	2500	353.0	353.0	32.0
LMC6064IMX/NOPB	SOIC	D	14	2500	367.0	367.0	35.0

TUBE

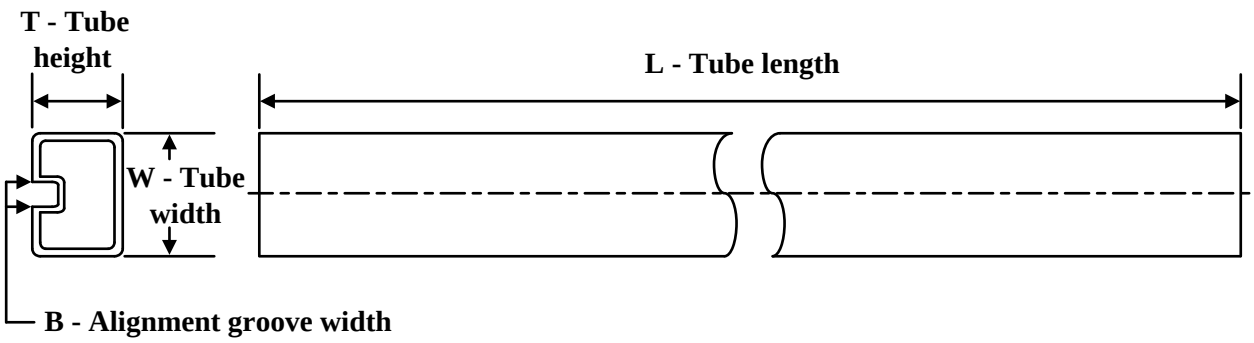

*All dimensions are nominal

Device	Package Name	Package Type	Pins	SPQ	L (mm)	W (mm)	T (µm)	B (mm)
LMC6062IN/NOPB	P	PDIP	8	40	502	14	11938	4.32
LMC6062IN/NOPB.A	P	PDIP	8	40	502	14	11938	4.32
LMC6062IN/NOPB.B	P	PDIP	8	40	502	14	11938	4.32

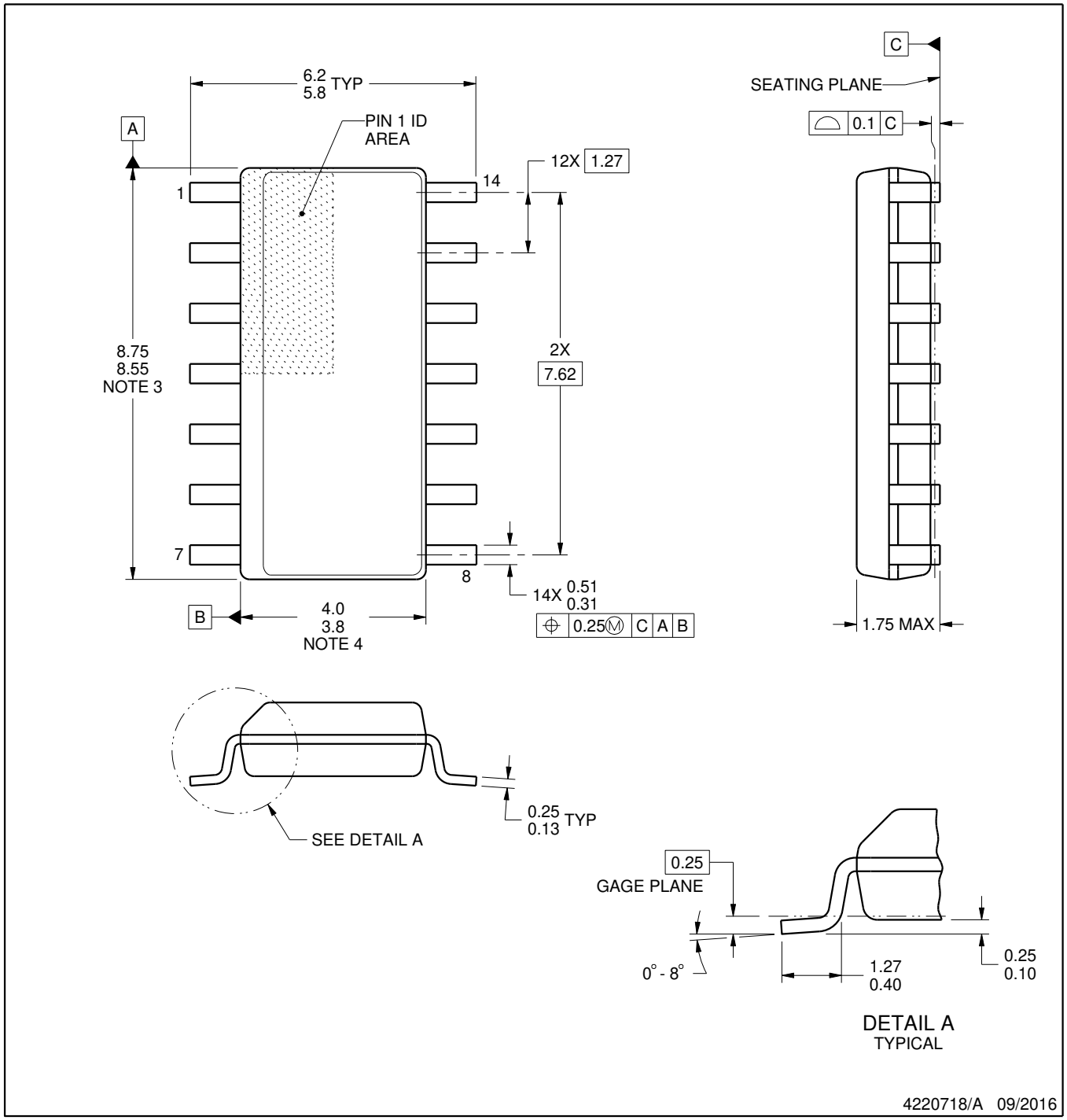

NOTES:

1. All linear dimensions are in millimeters. Dimensions in parenthesis are for reference only. Dimensioning and tolerancing per ASME Y14.5M.
2. This drawing is subject to change without notice.
3. This dimension does not include mold flash, protrusions, or gate burrs. Mold flash, protrusions, or gate burrs shall not exceed 0.15 mm, per side.
4. This dimension does not include interlead flash. Interlead flash shall not exceed 0.43 mm, per side.
5. Reference JEDEC registration MS-012, variation AB.

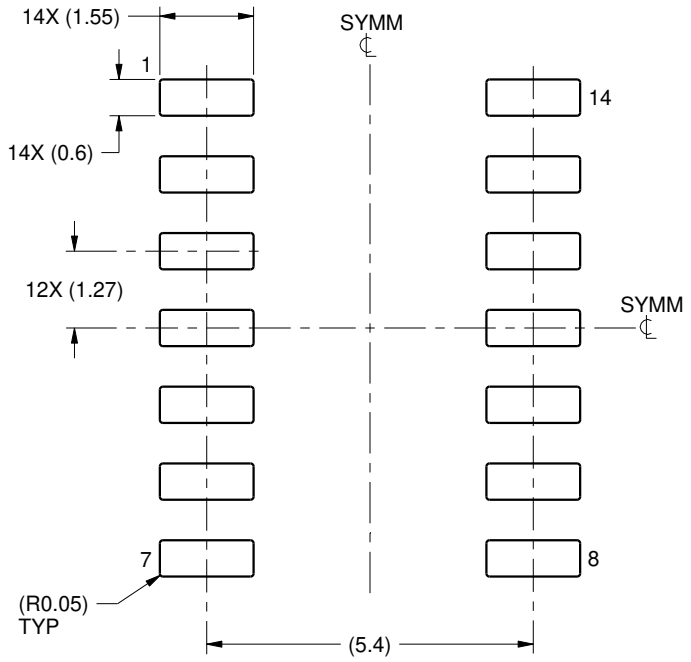

LAND PATTERN EXAMPLE
SCALE:8X

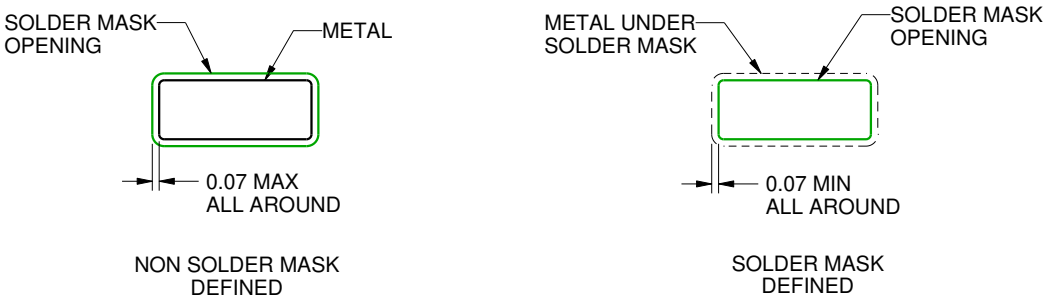

SOLDER MASK DETAILS

4220718/A 09/2016

NOTES: (continued)

6. Publication IPC-7351 may have alternate designs.
7. Solder mask tolerances between and around signal pads can vary based on board fabrication site.

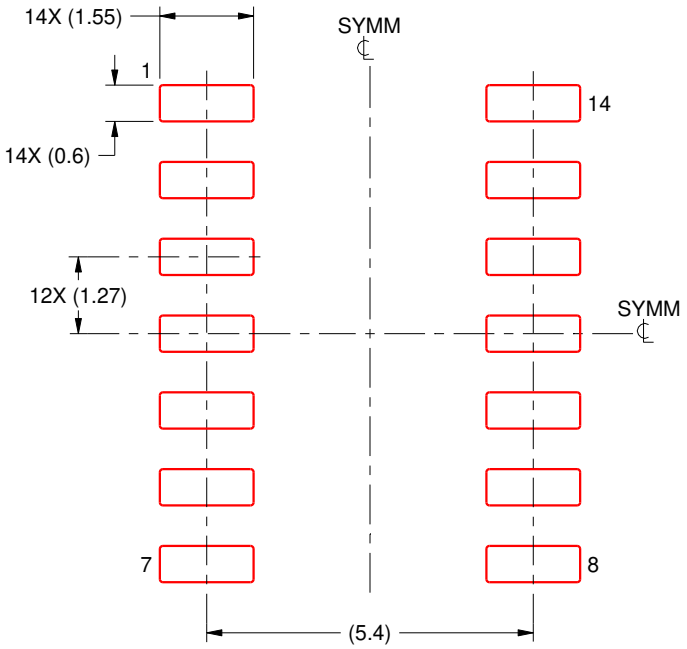

SOLDER PASTE EXAMPLE
BASED ON 0.125 mm THICK STENCIL
SCALE:8X

4220718/A 09/2016

NOTES: (continued)

8. Laser cutting apertures with trapezoidal walls and rounded corners may offer better paste release. IPC-7525 may have alternate design recommendations.
9. Board assembly site may have different recommendations for stencil design.

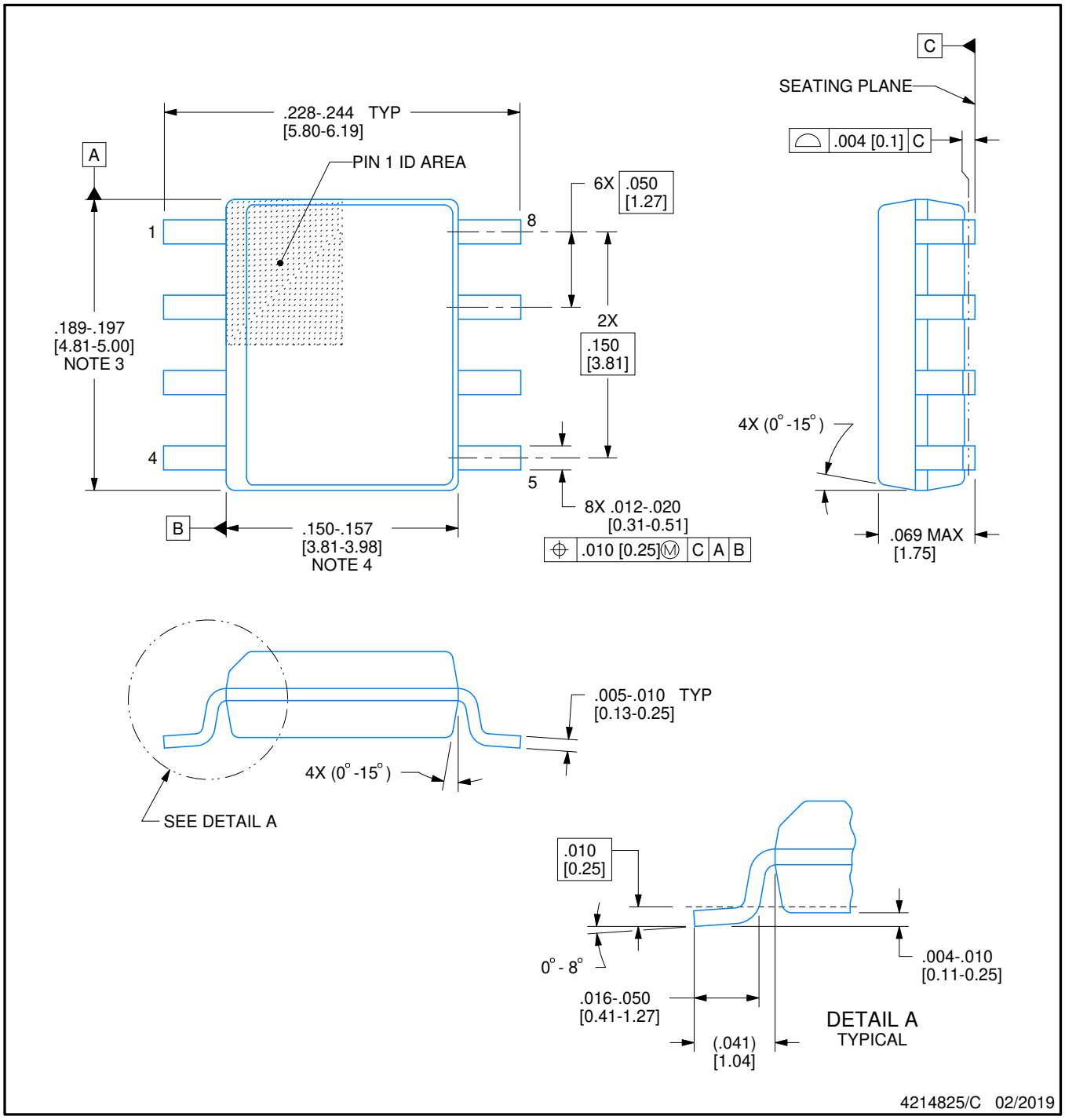

NOTES:

1. Linear dimensions are in inches [millimeters]. Dimensions in parenthesis are for reference only. Controlling dimensions are in inches. Dimensioning and tolerancing per ASME Y14.5M.
2. This drawing is subject to change without notice.
3. This dimension does not include mold flash, protrusions, or gate burrs. Mold flash, protrusions, or gate burrs shall not exceed .006 [0.15] per side.
4. This dimension does not include interlead flash.
5. Reference JEDEC registration MS-012, variation AA.

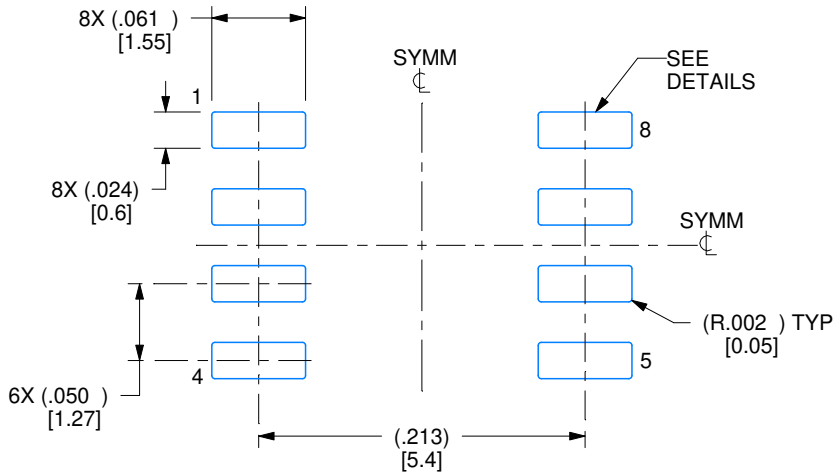

LAND PATTERN EXAMPLE
EXPOSED METAL SHOWN
SCALE:8X

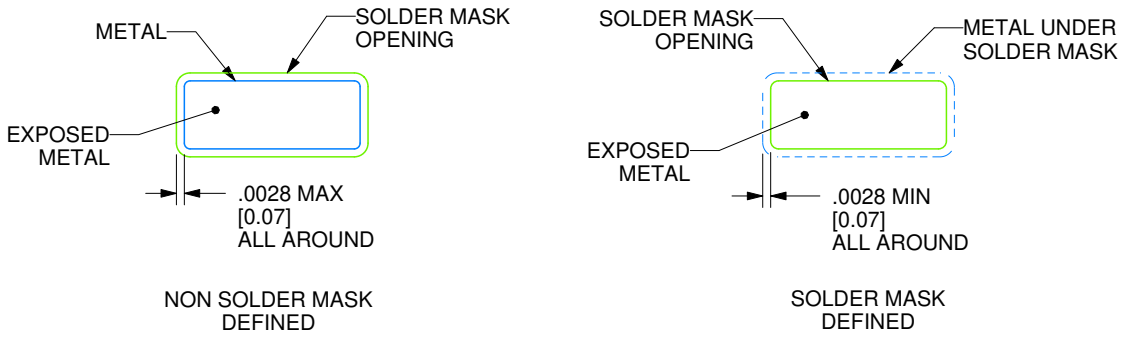

SOLDER MASK DETAILS

4214825/C 02/2019

NOTES: (continued)

6. Publication IPC-7351 may have alternate designs.
7. Solder mask tolerances between and around signal pads can vary based on board fabrication site.

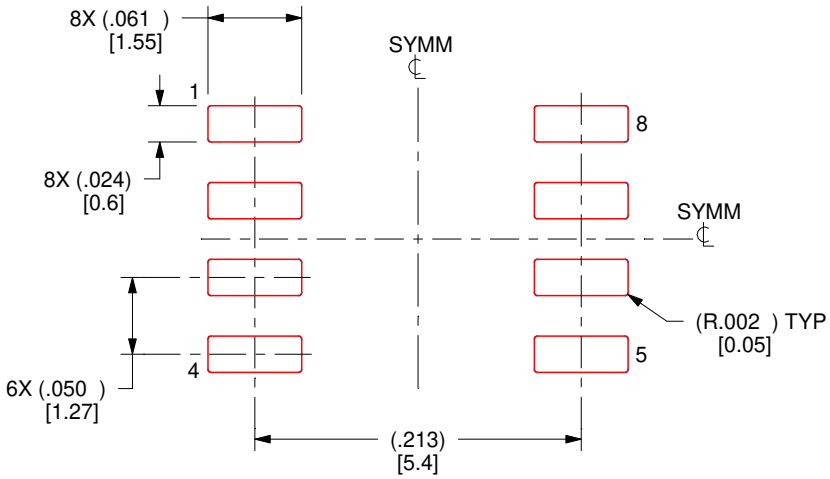

SOLDER PASTE EXAMPLE
BASED ON .005 INCH [0.125 MM] THICK STENCIL
SCALE:8X

4214825/C 02/2019

NOTES: (continued)

8. Laser cutting apertures with trapezoidal walls and rounded corners may offer better paste release. IPC-7525 may have alternate design recommendations.
9. Board assembly site may have different recommendations for stencil design.

P (R–PDIP–T8) PLASTIC DUAL–IN–LINE PACKAGE

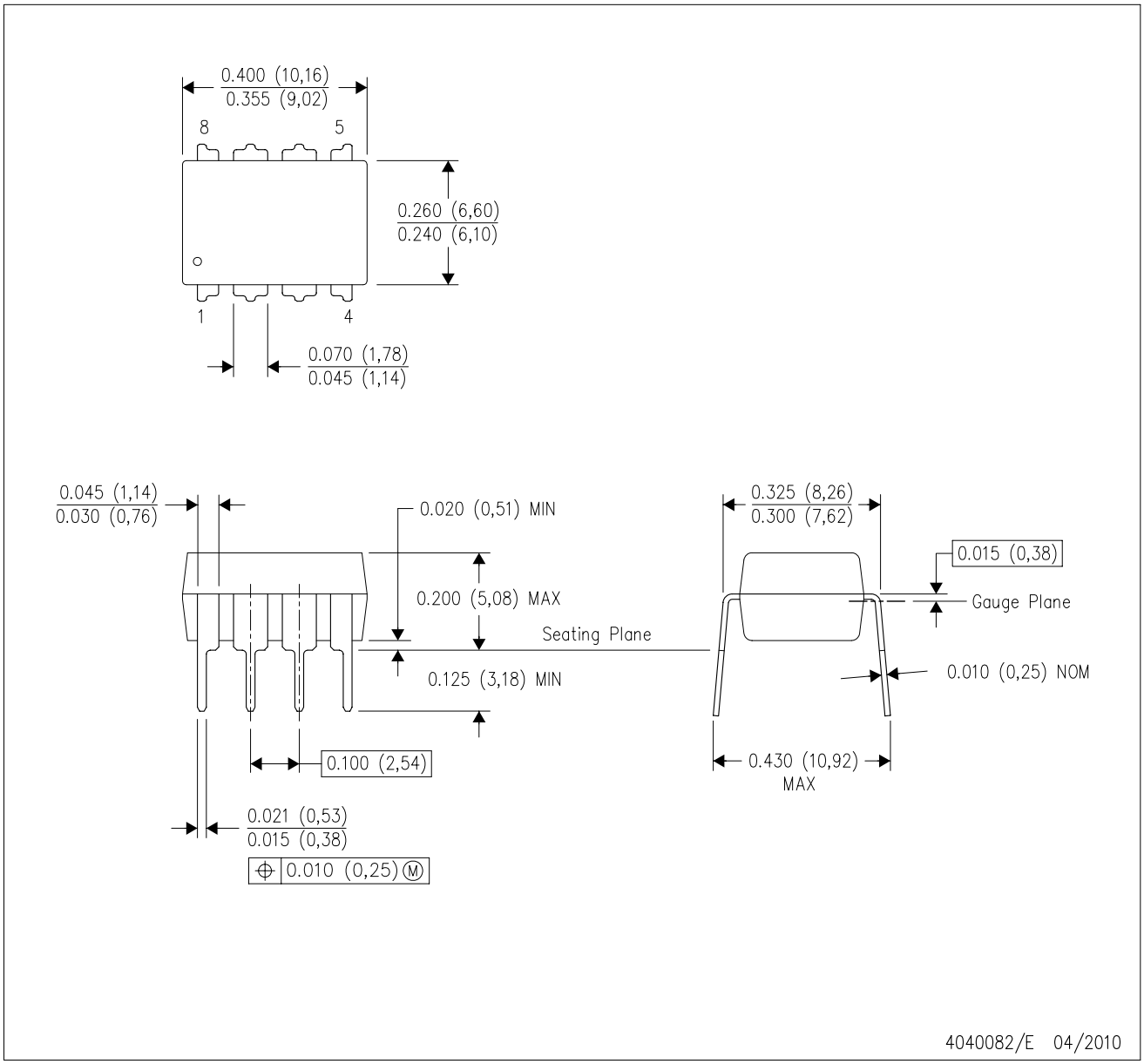

NOTES:
A. All linear dimensions are in inches (millimeters).
B. This drawing is subject to change without notice.
C. Falls within JEDEC MS–001 variation BA.

IMPORTANT NOTICE AND DISCLAIMER

TI PROVIDES TECHNICAL AND RELIABILITY DATA (INCLUDING DATASHEETS), DESIGN RESOURCES (INCLUDING REFERENCE DESIGNS), APPLICATION OR OTHER DESIGN ADVICE, WEB TOOLS, SAFETY INFORMATION, AND OTHER RESOURCES “AS IS” AND WITH ALL FAULTS, AND DISCLAIMS ALL WARRANTIES, EXPRESS AND IMPLIED, INCLUDING WITHOUT LIMITATION ANY IMPLIED WARRANTIES OF MERCHANTABILITY, FITNESS FOR A PARTICULAR PURPOSE OR NON-INFRINGEMENT OF THIRD PARTY INTELLECTUAL PROPERTY RIGHTS.

These resources are intended for skilled developers designing with TI products. You are solely responsible for (1) selecting the appropriate TI products for your application, (2) designing, validating and testing your application, and (3) ensuring your application meets applicable standards, and any other safety, security, regulatory or other requirements.

These resources are subject to change without notice. TI grants you permission to use these resources only for development of an application that uses the TI products described in the resource. Other reproduction and display of these resources is prohibited. No license is granted to any other TI intellectual property right or to any third party intellectual property right. TI disclaims responsibility for, and you fully indemnify TI and its representatives against any claims, damages, costs, losses, and liabilities arising out of your use of these resources.

TI’s products are provided subject to TI’s Terms of Sale, TI’s General Quality Guidelines, or other applicable terms available either on ti.com or provided in conjunction with such TI products. TI’s provision of these resources does not expand or otherwise alter TI’s applicable warranties or warranty disclaimers for TI products. Unless TI explicitly designates a product as custom or customer-specified, TI products are standard, catalog, general purpose devices.

TI objects to and rejects any additional or different terms you may propose.

Copyright © 2026, Texas Instruments Incorporated

Last updated 10/2025