STGB30V60DF, STGW30V60DF

Datasheet

Trench gate field-stop IGBT, V series 600 V, 30 A very high speed

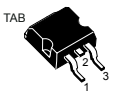

D²PAK

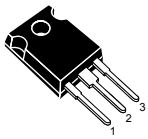

TO-247

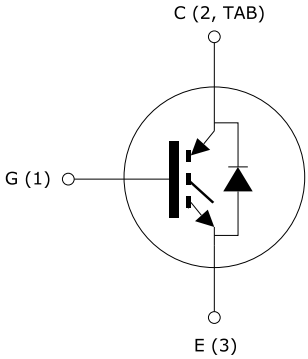

SC12850_DIODE_IGBT

Features

- Maximum junction temperature: T_J = 175 °C
- Tail-less switching off
- $V_{CE(sat)}$ = 1.85 V (typ.) @ I_C = 30 A
- Tight parameter distribution
- Safe paralleling
- Low thermal resistance
- Very fast soft recovery antiparallel diode

Applications

- Photovoltaic inverters
- Uninterruptible power supply
- Welding
- Power factor correction
- Very high frequency converters

Description

These devices are IGBTs developed using an advanced proprietary trench gate field-stop structure. The device is part of the V series IGBTs, which represent an optimum compromise between conduction and switching losses to maximize the efficiency of very high frequency converters. Furthermore, the positive $V_{CE(sat)}$ temperature coefficient and very tight parameter distribution result in safer paralleling operation.

Product status links
STGB30V60DF
STGW30V60DF

Product summary	
Order code	**STGB30V60DF**
Marking	GB30V60DF
Package	D²PAK
Packing	Tape and reel
Order code	**STGW30V60DF**
Marking	GW30V60DF
Package	TO-247
Packing	Tube

1 Electrical ratings

Table 1. Absolute maximum ratings

Symbol	Parameter	Value	Unit
V_{CES}	Collector-emitter voltage (V_{GE} = 0 V)	600	V
I_C	Continuous collector current at T_C = 25 °C	60	A
	Continuous collector current at T_C = 100 °C	30	A
I_{CP}(1)	Pulsed collector current	120	A
V_{GE}	Gate-emitter voltage	±20	V
I_F	Continuous forward current at T_C = 25 °C	60	A
	Continuous forward current at T_C = 100 °C	30	A
I_{FP}(1)	Pulsed forward current	120	A
P_{TOT}	Total power dissipation at T_C = 25 °C	258	W
T_{stg}	Storage temperature range	-55 to 150	°C
T_J	Operating junction temperature range	-55 to 175	°C

1. *Pulse width is limited by maximum junction temperature.*

Table 2. Thermal data

Symbol	Parameter	Value	Unit
R_{thJC}	Thermal resistance, junction-to-case IGBT	0.58	°C/W
	Thermal resistance, junction-to-case diode	2.08	
R_{thJA}	Thermal resistance, junction-to-ambient	50	°C/W

2 Electrical characteristics

T_J = 25 °C unless otherwise specified.

Table 3. Static characteristics

Symbol	Parameter	Test conditions	Min.	Typ.	Max.	Unit
$V_{(BR)CES}$	Collector-emitter breakdown voltage	V_{GE} = 0 V, I_C = 2 mA	600			V
$V_{CE(sat)}$	Collector-emitter saturation voltage	V_{GE} = 15 V, I_C = 30 A		1.85	2.3	V
		V_{GE} = 15 V, I_C = 30 A, T_J = 125 °C		2.15		
		V_{GE} = 15 V, I_C = 30 A, T_J = 175 °C		2.35		
V_F	Forward on-voltage	I_F = 30 A		2	2.6	V
		I_F = 30 A, T_J = 125 °C		1.7		
		I_F = 30 A, T_J = 175 °C		1.6		
$V_{GE(th)}$	Gate threshold voltage	V_{CE} = V_{GE}, I_C = 1 mA	5	6	7	V
I_{CES}	Collector cut-off current	V_{GE} = 0 V, V_{CE} = 600 V			25	µA
I_{GES}	Gate-emitter leakage current	V_{CE} = 0 V, V_{GE} = ±20 V			±250	nA

Table 4. Dynamic characteristics

Symbol	Parameter	Test conditions	Min.	Typ.	Max.	Unit
C_{ies}	Input capacitance	V_{CE} = 25 V, f = 1 MHz, V_{GE} = 0 V	-	3750	-	pF
C_{oes}	Output capacitance		-	120	-	pF
C_{res}	Reverse transfer capacitance		-	77	-	pF
Q_g	Total gate charge	V_{CC} = 480 V, I_C = 30 A, V_{GE} = 0 to 15 V (see Figure 29. Gate charge test circuit)	-	163	-	nC
Q_{ge}	Gate-emitter charge		-	28	-	nC
Q_{gc}	Gate-collector charge		-	72	-	nC

Table 5. Switching characteristics (inductive load)

Symbol	Parameter	Test conditions	Min.	Typ.	Max.	Unit
$t_{d(on)}$	Turn-on delay time	V_{CE} = 400 V, I_C = 30 A, R_G = 10 Ω, V_{GE} = 15 V (see Figure 27. Test circuit for inductive load switching)	-	45	-	ns
t_r	Current rise time		-	16	-	ns
$(di/dt)_{on}$	Turn-on current slope		-	1500	-	A/µs
$t_{d(off)}$	Turn-off delay time		-	189	-	ns
t_f	Current fall time		-	19	-	ns
E_{on} (1)	Turn-on switching energy		-	383	-	µJ
E_{off} (2)	Turn-off switching energy		-	233	-	µJ
E_{ts}	Total switching energy		-	616	-	µJ
$t_{d(on)}$	Turn-on delay time	V_{CE} = 400 V, I_C = 30 A, R_G = 10 Ω, V_{GE} = 15 V, T_J = 175 °C (see Figure 27. Test circuit for inductive load switching)	-	42	-	ns
t_r	Current rise time		-	17	-	ns
$(di/dt)_{on}$	Turn-on current slope		-	1337	-	A/µs
$t_{d(off)}$	Turn-off-delay time		-	193	-	ns
t_f	Current fall time		-	32	-	ns
E_{on} (1)	Turn-on switching energy		-	794	-	µJ
E_{off} (2)	Turn-off switching energy		-	378	-	µJ
E_{ts}	Total switching energy		-	1172	-	µJ

1. *Including the reverse recovery of the external diode.*
2. *Including the tail of the collector current.*

Table 6. Diode switching characteristics (inductive load)

Symbol	Parameter	Test conditions	Min.	Typ.	Max.	Unit
t_{rr}	Reverse recovery time	I_F = 30 A, V_R = 400 V, V_{GE} = 15 V, di/dt =1000 A/µs (see Figure 27. Test circuit for inductive load switching)	-	53	-	ns
Q_{rr}	Reverse recovery charge		-	384	-	nC
I_{rrm}	Reverse recovery current		-	14.5	-	A
dIrr/ /dt	Peak rate of fall of reverse recovery current during t_b		-	788	-	A/µs
E_{rr}	Reverse recovery switching		-	104	-	µJ
t_{rr}	Reverse recovery time	I_F = 30 A, V_R = 400 V, V_{GE} = 15 V, di/dt =1000 A/µs, T_J = 175 °C (see Figure 27. Test circuit for inductive load switching)	-	104	-	ns
Q_{rr}	Reverse recovery charge		-	1352	-	nC
I_{rrm}	Reverse recovery current		-	26	-	A
dIrr/ /dt	Peak rate of fall of reverse recovery current during t_b		-	310	-	A/µs
E_{rr}	Reverse recovery switching		-	407	-	µJ

2.1 Electrical characteristics (curves)

Figure 1. Power dissipation vs case temperature

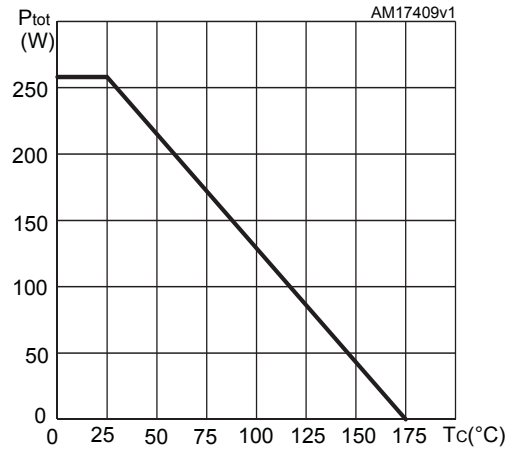

Figure 2. Collector current vs case temperature

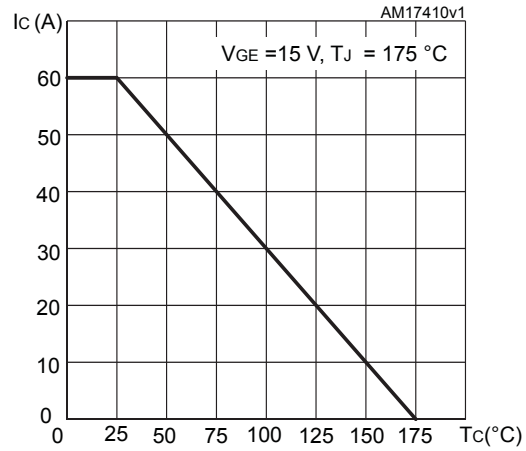

Figure 3. Output characteristics (T_J = 25 °C)

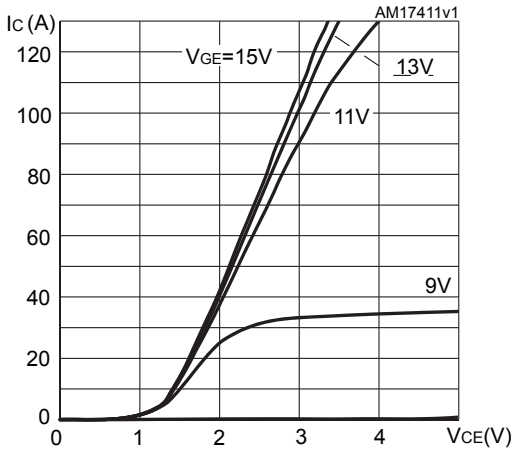

Figure 4. Output characteristics (T_J = 175 °C)

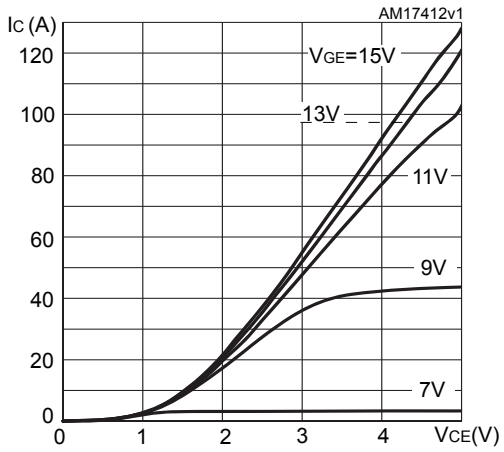

Figure 5. $V_{CE(sat)}$ vs junction temperature

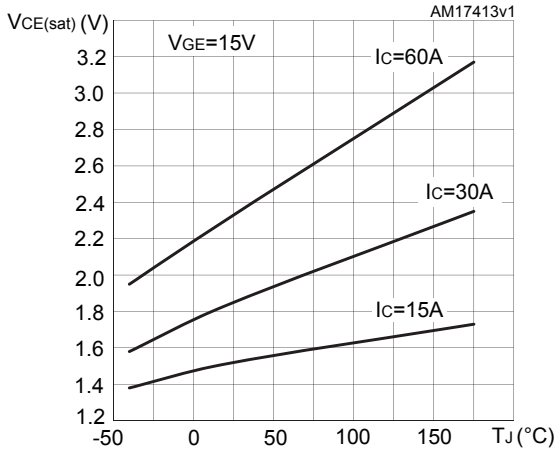

Figure 6. $V_{CE(sat)}$ vs collector current

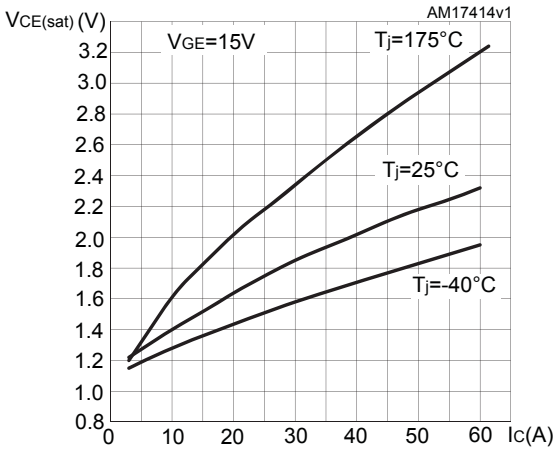

Figure 7. Collector current vs switching frequency

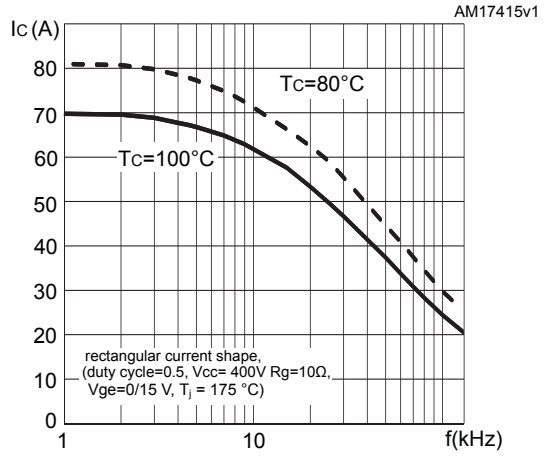

Figure 8. Forward bias safe operating area

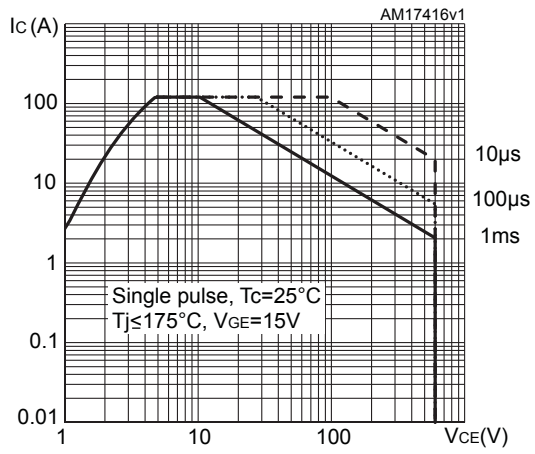

Figure 9. Transfer characteristics

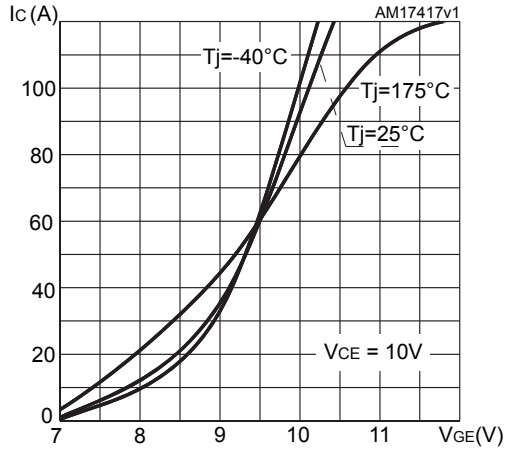

Figure 10. Diode V_F vs forward current

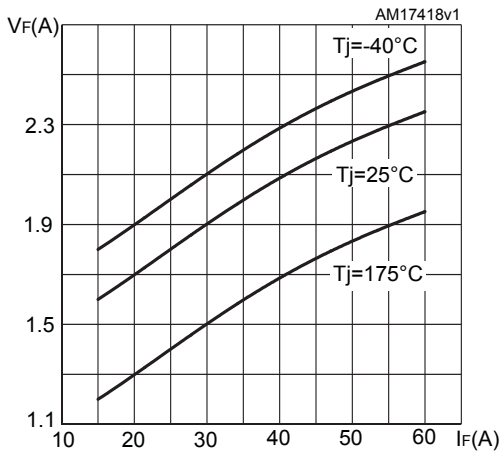

Figure 11. Normalized $V_{GE(th)}$ vs junction temperature

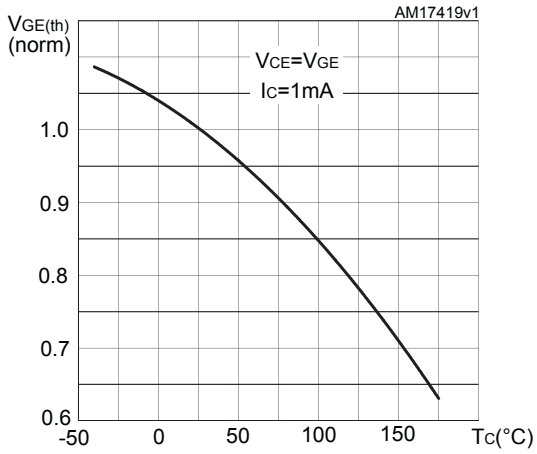

Figure 12. Normalized $V_{(BR)CES}$ vs junction temperature

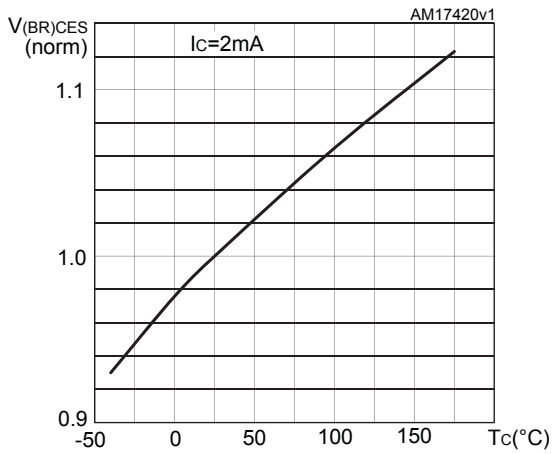

Figure 13. Capacitance variations

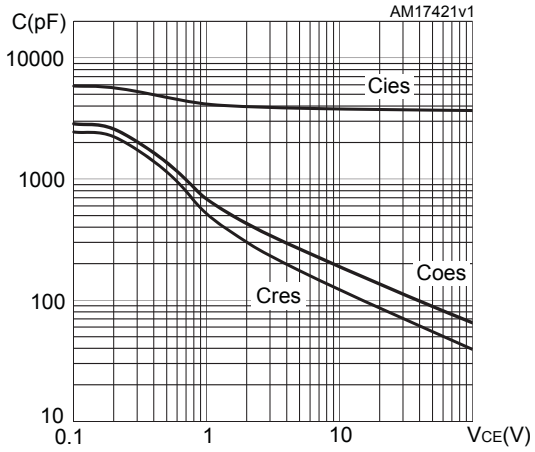

Figure 14. Gate charge vs gate-emitter voltage

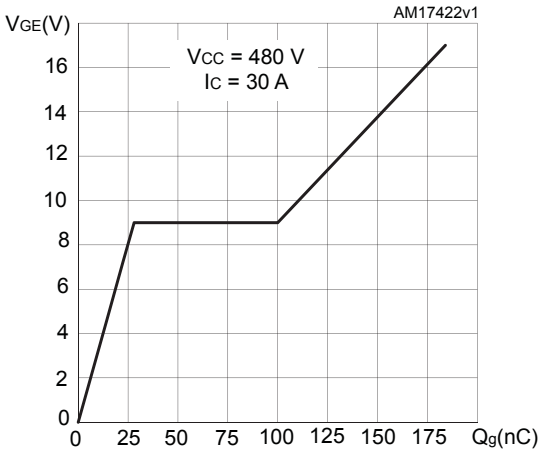

Figure 15. Switching energy vs collector current

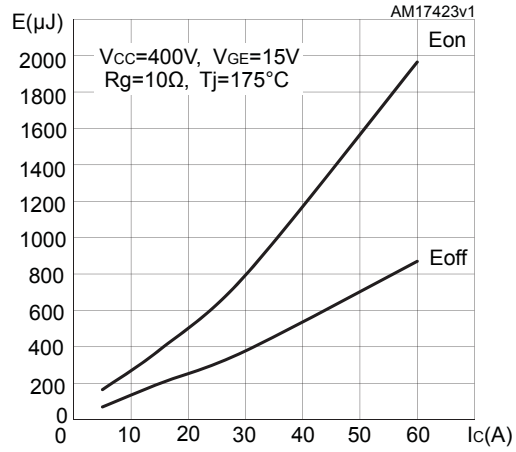

Figure 16. Switching energy vs gate resistance

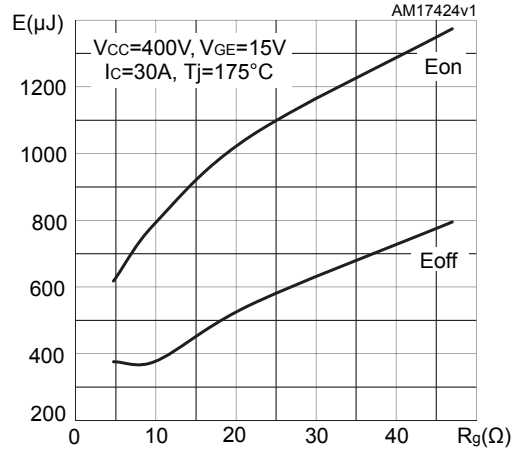

Figure 17. Switching energy vs junction temperature

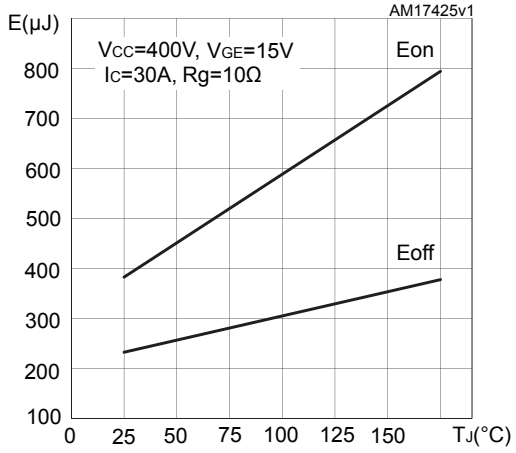

Figure 18. Switching energy vs collector emitter voltage

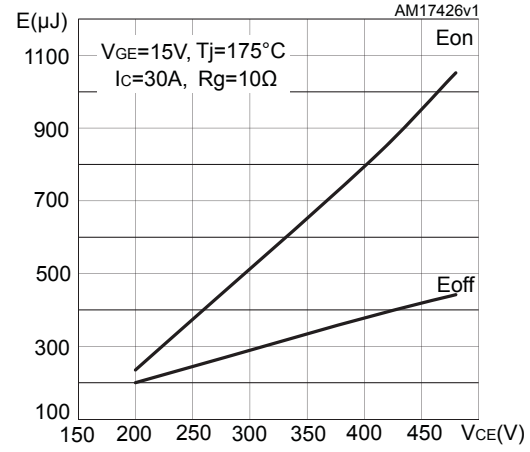

Figure 19. Switching times vs collector current

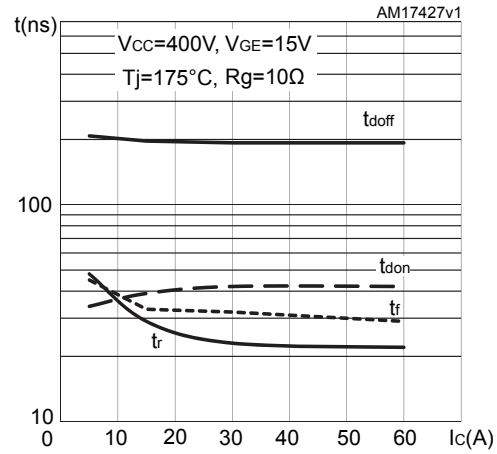

Figure 20. Switching times vs gate resistance

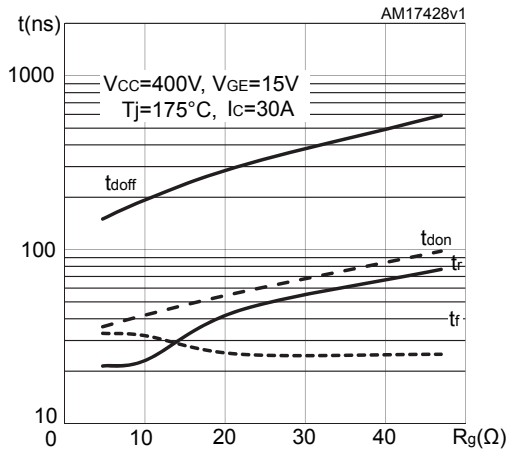

Figure 21. Reverse recovery current vs diode current slope

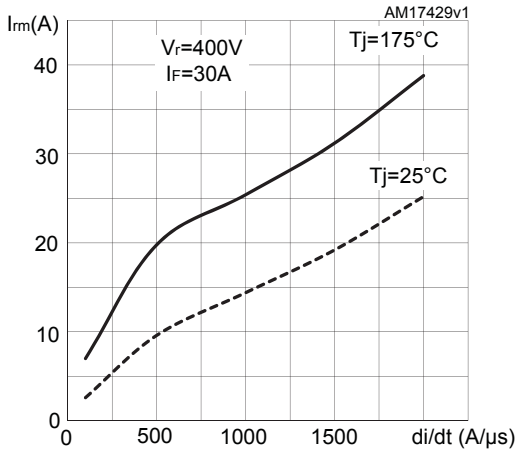

Figure 22. Reverse recovery time vs diode current slope

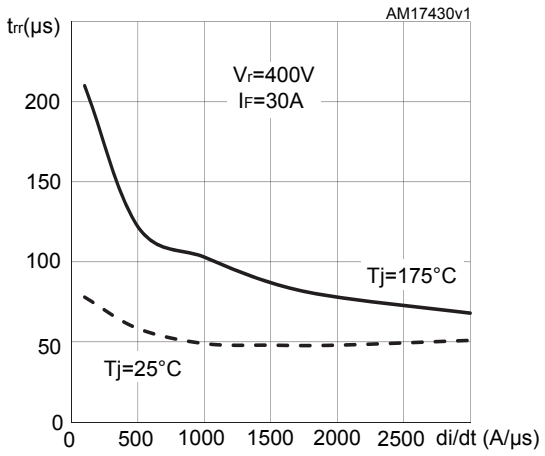

Figure 23. Reverse recovery charge vs diode current slope

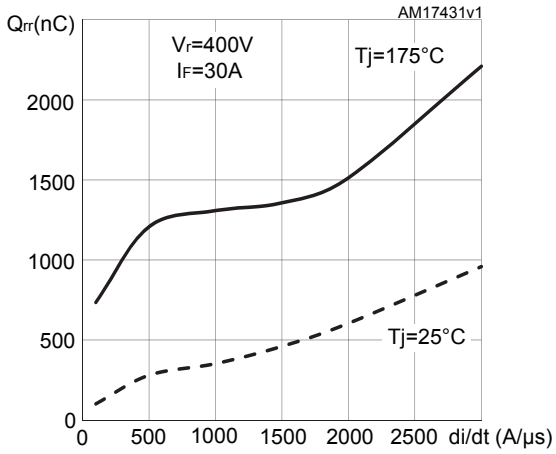

Figure 24. Reverse recovery energy vs diode current slope

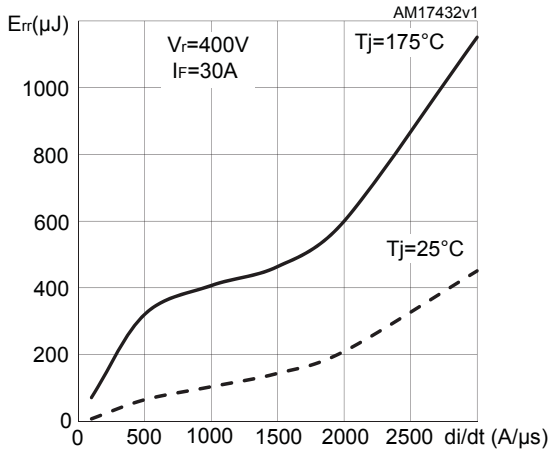

Figure 25. Thermal impedence for IGBT

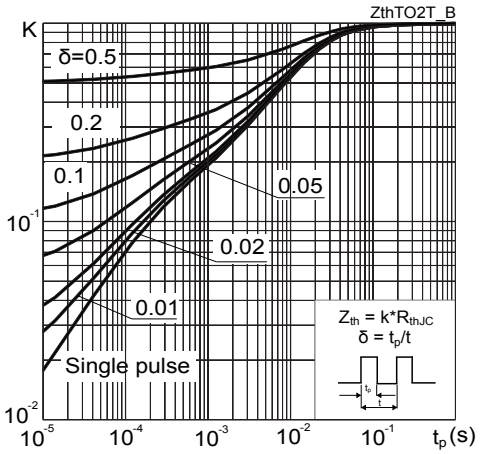

Figure 26. Thermal impedance for diode

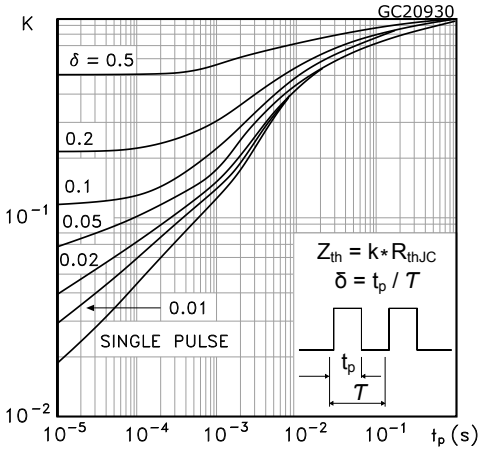

3 Test circuits

Figure 27. Test circuit for inductive load switching

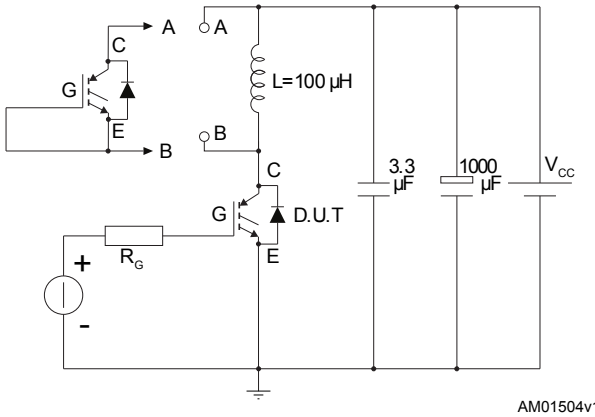

Figure 28. Diode reverse recovery waveform

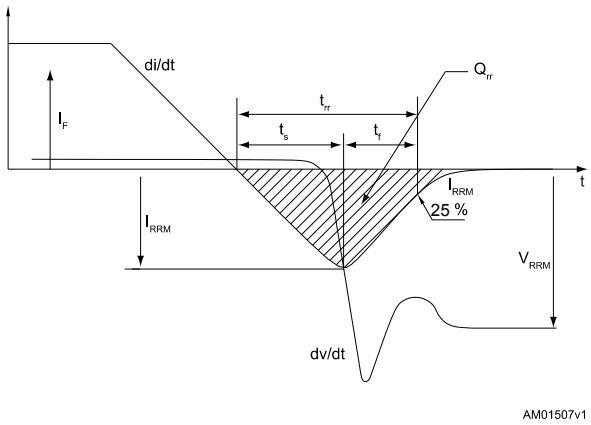

Figure 29. Gate charge test circuit

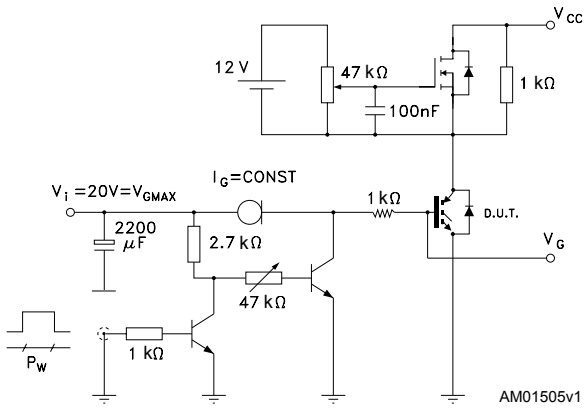

Figure 30. Switching waveform

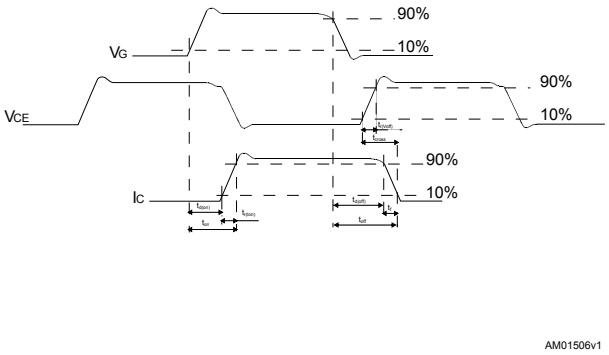

4 Package information

To meet environmental requirements, ST offers these devices in different grades of ECOPACK packages, depending on their level of environmental compliance. ECOPACK specifications, grade definitions, and product status are available at: www.st.com. ECOPACK is an ST trademark.

4.1 D²PAK (TO-263) type A2 package information

Figure 31. **D²PAK (TO-263) type A2 package outline**

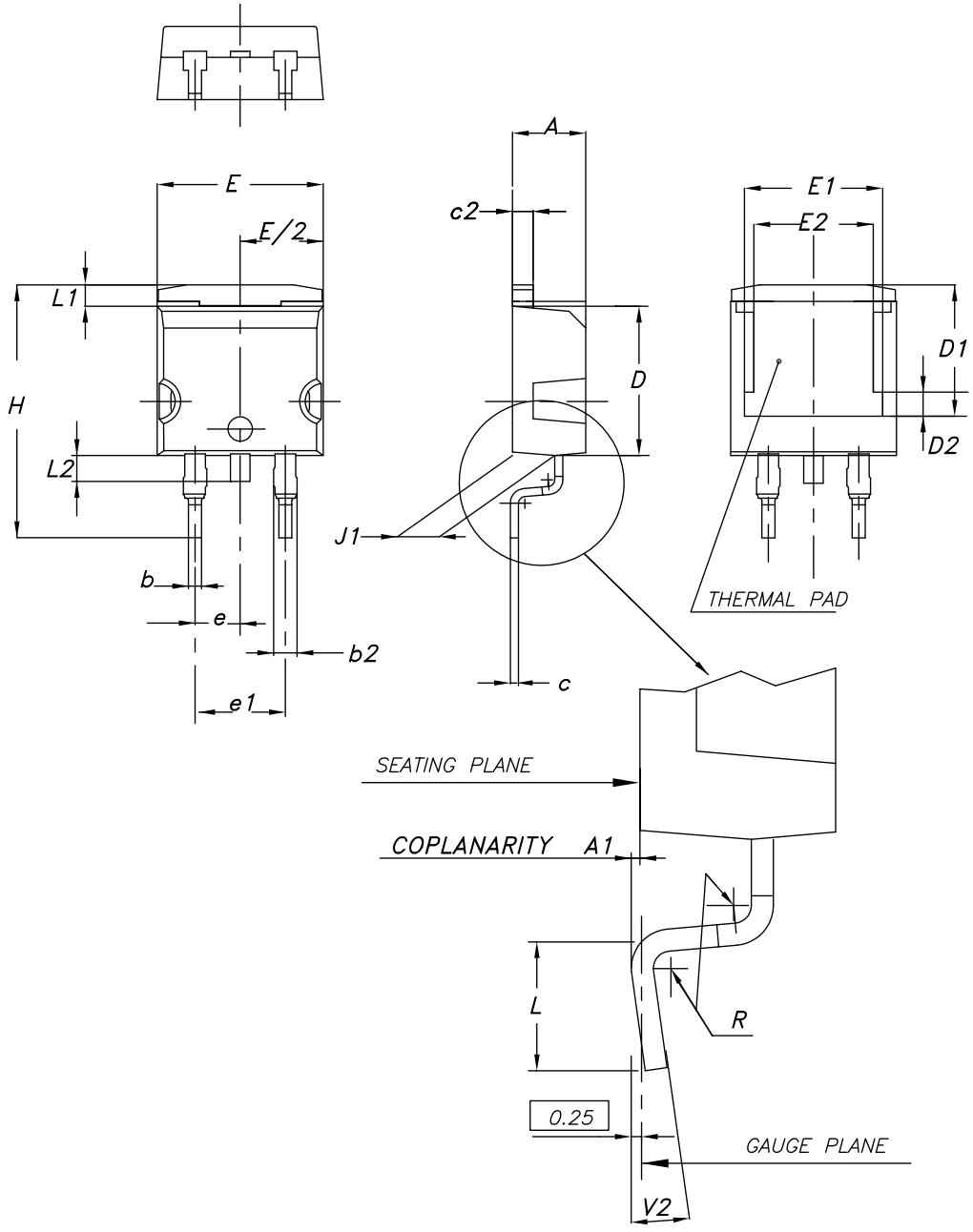

0079457_A2_27

Table 7. D²PAK (TO-263) type A2 package mechanical data

Dim.	mm		
	Min.	Typ.	Max.
A	4.40		4.60
A1	0.03		0.23
b	0.70		0.93
b2	1.14		1.70
c	0.45		0.60
c2	1.23		1.36
D	8.95		9.35
D1	7.50	7.75	8.00
D2	1.10	1.30	1.50
E	10.00		10.40
E1	8.70	8.90	9.10
E2	7.30	7.50	7.70
e		2.54	
e1	4.88		5.28
H	15.00		15.85
J1	2.49		2.69
L	2.29		2.79
L1	1.27		1.40
L2	1.30		1.75
R		0.40	
V2	0°		8°

Figure 32. D²PAK (TO-263) recommended footprint (dimensions are in mm)

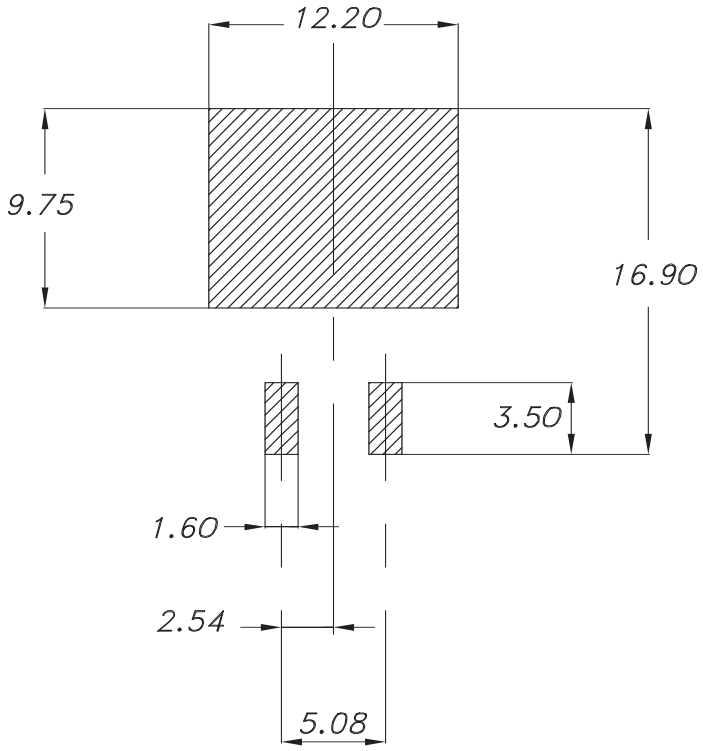

4.2 TO-247 package information

Figure 33. **TO-247 package outline**

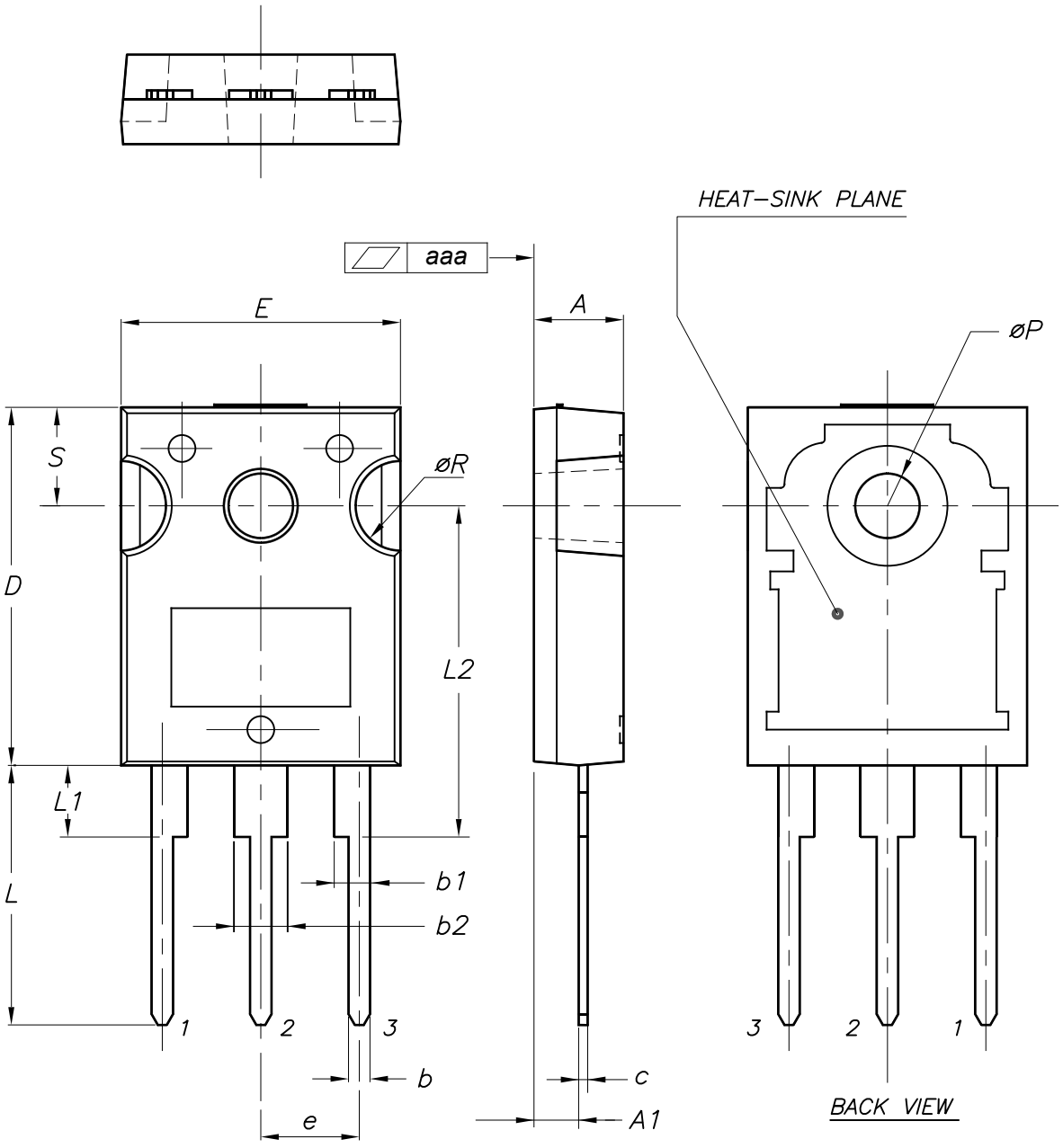

0075325_10

Table 8. **TO-247 package mechanical data**

Dim.	mm		
	Min.	Typ.	Max.
A	4.85		5.15
A1	2.20		2.60
b	1.0		1.40
b1	2.0		2.40
b2	3.0		3.40
c	0.40		0.80
D	19.85		20.15
E	15.45		15.75
e	5.30	5.45	5.60
L	14.20		14.80
L1	3.70		4.30
L2		18.50	
ØP	3.55		3.65
ØR	4.50		5.50
S	5.30	5.50	5.70
aaa		0.04	0.10

4.3 D²PAK packing information

Figure 34. **D²PAK tape drawing (dimensions are in mm)**

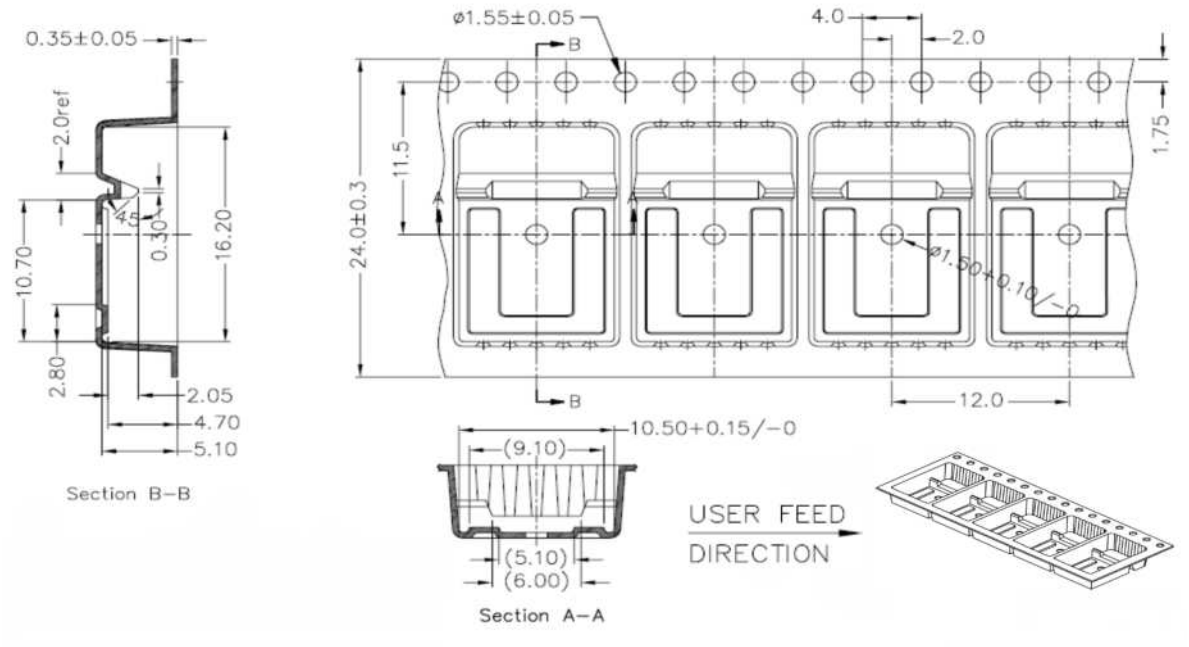

Revision history

Table 9. **Document revision history**

Date	Revision	Changes
14-Mar-2013	1	Initial release
03-May-2013	2	Added: *Section 2.1: Electrical characteristics (curves)*
04-Jun-2013	3	Added minimum and maximum values for $V_{GE(th)}$ in *Table 4: Static characteristics.*
08-Oct-2013	4	Updated title, features and description in cover page.
26-Jun-2025	5	The part numbers STGP30V60DF and STGWT30V6DF have been removed and the document has been updated accordingly. Updated Section 4: Package information.

Contents

1 **Electrical ratings** 2
2 **Electrical characteristics** 3
2.1 Electrical characteristics (curves) 5
3 **Test circuits** 10
4 **Package information** 11
4.1 D²PAK (TO-263) type A2 package information 11
4.2 TO-247 package information 14
4.3 D²PAK packing information 15
Revision history 16

IMPORTANT NOTICE – READ CAREFULLY

STMicroelectronics NV and its subsidiaries (“ST”) reserve the right to make changes, corrections, enhancements, modifications, and improvements to ST products and/or to this document at any time without notice. Purchasers should obtain the latest relevant information on ST products before placing orders. ST products are sold pursuant to ST’s terms and conditions of sale in place at the time of order acknowledgment.

Purchasers are solely responsible for the choice, selection, and use of ST products and ST assumes no liability for application assistance or the design of purchasers’ products.

No license, express or implied, to any intellectual property right is granted by ST herein.

Resale of ST products with provisions different from the information set forth herein shall void any warranty granted by ST for such product.

ST and the ST logo are trademarks of ST. For additional information about ST trademarks, refer to www.st.com/trademarks. All other product or service names are the property of their respective owners.

Information in this document supersedes and replaces information previously supplied in any prior versions of this document.

© 2025 STMicroelectronics – All rights reserved