STM32F303xD STM32F303xE

ARM® Cortex®-M4 32b MCU+FPU, up to 512KB Flash, 80KB SRAM, FSMC, 4 ADCs, 2 DAC ch., 7 comp, 4 Op-Amp, 2.0-3.6 V

Datasheet - production data

Features

- Core: ARM® Cortex®-M4 32-bit CPU with 72 MHz FPU, single-cycle multiplication and HW division, 90 DMIPS (from CCM), DSP instruction and MPU (memory protection unit)
- Operating conditions:
  - V_{DD}, V_{DDA} voltage range: 2.0 V to 3.6 V
- Memories
  - Up to 512 Kbytes of Flash memory
  - 64 Kbytes of SRAM, with HW parity check implemented on the first 32 Kbytes.
  - Routine booster: 16 Kbytes of SRAM on instruction and data bus, with HW parity check (CCM)
  - Flexible memory controller (FSMC) for static memories, with four Chip Select
- CRC calculation unit
- Reset and supply management
  - Power-on/Power-down reset (POR/PDR)
  - Programmable voltage detector (PVD)
  - Low-power modes: Sleep, Stop and Standby
  - V_{BAT} supply for RTC and backup registers
- Clock management
  - 4 to 32 MHz crystal oscillator
  - 32 kHz oscillator for RTC with calibration
  - Internal 8 MHz RC with x 16 PLL option
  - Internal 40 kHz oscillator
- Up to 115 fast I/Os
  - All mappable on external interrupt vectors
  - Several 5 V-tolerant
- Interconnect matrix
- 12-channel DMA controller
- Four ADCs 0.20 µs (up to 40 channels) with selectable resolution of 12/10/8/6 bits, 0 to 3.6 V conversion range, separate analog supply from 2.0 to 3.6 V

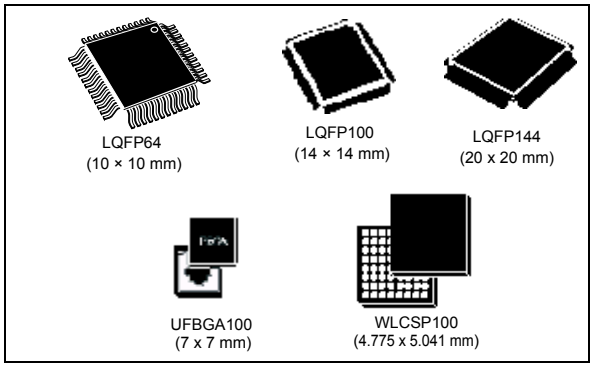

- Two 12-bit DAC channels with analog supply from 2.4 to 3.6 V
- Seven ultra-fast rail-to-rail analog comparators with analog supply from 2.0 to 3.6 V
- Four operational amplifiers that can be used in PGA mode, all terminals accessible with analog supply from 2.4 to 3.6 V
- Up to 24 capacitive sensing channels supporting touchkey, linear and rotary touch sensors
- Up to 14 timers:
  - One 32-bit timer and two 16-bit timers with up to four IC/OC/PWM or pulse counter and quadrature (incremental) encoder input
  - Three 16-bit 6-channel advanced-control timers, with up to six PWM channels, deadtime generation and emergency stop
  - One 16-bit timer with two IC/OCs, one OCN/PWM, deadtime generation and emergency stop
  - Two 16-bit timers with IC/OC/OCN/PWM, deadtime generation and emergency stop
  - Two watchdog timers (independent, window)
  - One SysTick timer: 24-bit downcounter
  - Two 16-bit basic timers to drive the DAC
- Calendar RTC with Alarm, periodic wakeup from Stop/Standby
- Communication interfaces
  - CAN interface (2.0B Active)

This is information on a product in full production. www.st.com

- Three I^2C Fast mode plus (1 Mbit/s) with 20 mA current sink, SMBus/PMBus, wakeup from STOP
- Up to five USART/UARTs (ISO 7816 interface, LIN, IrDA, modem control)
- Up to four SPIs, 4 to 16 programmable bit frames, two with multiplexed half/full duplex I^2S interface
- USB 2.0 full-speed interface with LPM support
- Infrared transmitter

- SWD, Cortex®-M4 with FPU ETM, JTAG
- 96-bit unique ID

Table 1. Device summary

Reference	Part number
STM32F303xD	STM32F303RD, STM32F303VD, STM32F303ZD.
STM32F303xE	STM32F303RE, STM32F303VE, STM32F303ZE.

Contents

1 Introduction 11

2 Description 12

3 Functional overview 16

3.1 ARM® Cortex®-M4 core with FPU with embedded Flash and SRAM . . . 16

3.2 Memory protection unit (MPU) 16

3.3 Embedded Flash memory 16

3.4 Embedded SRAM 17

3.5 Boot modes 17

3.6 Cyclic redundancy check (CRC) 17

3.7 Power management 18

3.7.1 Power supply schemes 18

3.7.2 Power supply supervisor 18

3.7.3 Voltage regulator 18

3.7.4 Low-power modes 19

3.8 Interconnect matrix 19

3.9 Clocks and startup 20

3.10 General-purpose input/outputs (GPIOs) 22

3.11 Direct memory access (DMA) 22

3.12 Flexible static memory controller (FSMC) 22

3.13 Interrupts and events 23

3.13.1 Nested vectored interrupt controller (NVIC) 23

3.14 Fast analog-to-digital converter (ADC) 23

3.14.1 Temperature sensor 24

3.14.2 Internal voltage reference (V_{REFINT}) 24

3.14.3 V_{BAT} battery voltage monitoring 24

3.14.4 OPAMP reference voltage (VREFOPAMP) 24

3.15 Digital-to-analog converter (DAC) 24

3.16 Operational amplifier (OPAMP) 25

3.17 Ultra-fast comparators (COMP) 25

3.18 Timers and watchdogs 25

3.18.1 Advanced timers (TIM1, TIM8, TIM20) 26
3.18.2 General-purpose timers (TIM2, TIM3, TIM4, TIM15, TIM16, TIM17) . . 26
3.18.3 Basic timers (TIM6, TIM7) 27
3.18.4 Independent watchdog (IWDG) 27
3.18.5 Window watchdog (WWDG) 27
3.18.6 SysTick timer 28
3.19 Real-time clock (RTC) and backup registers 28
3.20 Inter-integrated circuit interface (I^2C) 28
3.21 Universal synchronous/asynchronous receiver transmitter (USART) . . . 29
3.22 Universal asynchronous receiver transmitter (UART) 30
3.23 Serial peripheral interface (SPI)/Inter-integrated sound interfaces (I^2S) . 30
3.24 Controller area network (CAN) 31
3.25 Universal serial bus (USB) 31
3.26 Infrared transmitter 31
3.27 Touch sensing controller (TSC) 32
3.28 Development support 33
3.28.1 Serial wire JTAG debug port (SWJ-DP) 33
3.28.2 Embedded Trace Macrocell 33

4 Pinout and pin description 35

5 Memory mapping 64

6 Electrical characteristics 68
6.1 Parameter conditions 68
6.1.1 Minimum and maximum values 68
6.1.2 Typical values 68
6.1.3 Typical curves 68
6.1.4 Loading capacitor 68
6.1.5 Pin input voltage 68
6.1.6 Power supply scheme 69
6.1.7 Current consumption measurement 70
6.2 Absolute maximum ratings 70
6.3 Operating conditions 72
6.3.1 General operating conditions 72
6.3.2 Operating conditions at power-up / power-down 73

6.3.3 Embedded reset and power control block characteristics 73
6.3.4 Embedded reference voltage 74
6.3.5 Supply current characteristics 74
6.3.6 Wakeup time from low-power mode 87
6.3.7 External clock source characteristics 88
6.3.8 Internal clock source characteristics 92
6.3.9 PLL characteristics 93
6.3.10 Memory characteristics 94
6.3.11 FSMC characteristics 94
6.3.12 EMC characteristics 115
6.3.13 Electrical sensitivity characteristics 116
6.3.14 I/O current injection characteristics 117
6.3.15 I/O port characteristics 118
6.3.16 NRST pin characteristics 123
6.3.17 Timer characteristics 124
6.3.18 Communications interfaces 125
6.3.19 ADC characteristics 132
6.3.20 DAC electrical specifications 144
6.3.21 Comparator characteristics 146
6.3.22 Operational amplifier characteristics 148
6.3.23 Temperature sensor characteristics 150
6.3.24 V_{BAT} monitoring characteristics 151

7 Package information 152
7.1 Package mechanical data 152
7.2 LQFP144 package information 152
7.3 UFBGA100 package information 156
7.4 LQFP100 package information 159
7.5 WLCSP100 package information 162
7.6 LQFP64 package information 165
7.7 Thermal characteristics 168
7.7.1 Reference document 168
7.7.2 Selecting the product temperature range 168

8 Part numbering 171

9 Revision history 172

List of tables

Table 1. Device summary . . . 2
Table 2. STM32F303xD/E family device features and peripheral counts . . . 13
Table 3. External analog supply values for analog peripherals . . . 18
Table 4. STM32F303xD/E peripheral interconnect matrix . . . 19
Table 5. Timer feature comparison . . . 26
Table 6. Comparison of I^2C analog and digital filters . . . 29
Table 7. STM32F303xD/E I^2C implementation . . . 29
Table 8. USART features . . . 30
Table 9. STM32F303xD/E SPI/I^2S implementation . . . 31
Table 10. Capacitive sensing GPIOs available on STM32F303xD/E devices . . . 32
Table 11. Number of capacitive sensing channels available on STM32F303xD/E devices . . . 33
Table 12. Legend/abbreviations used in the pinout table . . . 40
Table 13. STM32F303xD/E pin definitions . . . 41
Table 14. STM32F303xD/E alternate function mapping . . . 53
Table 15. Memory map, peripheral register boundary addresses . . . 65
Table 16. Voltage characteristics . . . 70
Table 17. Current characteristics . . . 71
Table 18. Thermal characteristics . . . 71
Table 19. General operating conditions . . . 72
Table 20. Operating conditions at power-up / power-down . . . 73
Table 21. Embedded reset and power control block characteristics . . . 73
Table 22. Programmable voltage detector characteristics . . . 73
Table 23. Embedded internal reference voltage . . . 74
Table 24. Internal reference voltage calibration values . . . 74
Table 25. Typical and maximum current consumption from V_{DD} supply at V_{DD} = 3.6V . . . 75
Table 26. Typical and maximum current consumption from the V_{DDA} supply . . . 76
Table 27. Typical and maximum V_{DD} consumption in Stop and Standby modes . . . 77
Table 28. Typical and maximum V_{DDA} consumption in Stop and Standby modes . . . 78
Table 29. Typical and maximum current consumption from V_{BAT} supply . . . 78
Table 30. Typical current consumption in Run mode, code with data processing running from Flash . . . 80
Table 31. Typical current consumption in Sleep mode, code running from Flash or RAM . . . 81
Table 32. Switching output I/O current consumption . . . 83
Table 33. Peripheral current consumption . . . 85
Table 34. Low-power mode wakeup timings . . . 87
Table 35. Wakeup time using USART . . . 87
Table 36. High-speed external user clock characteristics . . . 88
Table 37. Low-speed external user clock characteristics . . . 89
Table 38. HSE oscillator characteristics . . . 90
Table 39. LSE oscillator characteristics (f_{LSE} = 32.768 kHz) . . . 91
Table 40. HSI oscillator characteristics . . . 92
Table 41. LSI oscillator characteristics . . . 93
Table 42. PLL characteristics . . . 93
Table 43. Flash memory characteristics . . . 94
Table 44. Flash memory endurance and data retention . . . 94
Table 45. Asynchronous non-multiplexed SRAM/PSRAM/NOR read timings . . . 96
Table 46. Asynchronous non-multiplexed SRAM/PSRAM/NOR read-NWAIT timings . . . 96

Table 47. Asynchronous non-multiplexed SRAM/PSRAM/NOR write timings . . . 97
Table 48. Asynchronous non-multiplexed SRAM/PSRAM/NOR write-NWAIT timings. . . . 98
Table 49. Asynchronous multiplexed PSRAM/NOR read-NWAIT timings . . . 98
Table 50. Asynchronous multiplexed PSRAM/NOR read timings. . . . 99
Table 51. Asynchronous multiplexed PSRAM/NOR write timings . . . 101
Table 52. Asynchronous multiplexed PSRAM/NOR write-NWAIT timings . . . 101
Table 53. Synchronous multiplexed NOR/PSRAM read timings . . . 102
Table 54. Synchronous multiplexed PSRAM write timings . . . 104
Table 55. Synchronous non-multiplexed NOR/PSRAM read timings . . . 105
Table 56. Synchronous non-multiplexed PSRAM write timings . . . 107
Table 57. Switching characteristics for PC Card/CF read and write cycles in attribute/common space. . . . 108
Table 58. Switching characteristics for PC Card/CF read and write cycles in I/O space . . . 111
Table 59. Switching characteristics for NAND Flash read cycles . . . 114
Table 60. Switching characteristics for NAND Flash write cycles. . . . 114
Table 61. EMS characteristics . . . 115
Table 62. EMI characteristics . . . 116
Table 63. ESD absolute maximum ratings . . . 116
Table 64. Electrical sensitivities . . . 117
Table 65. I/O current injection susceptibility . . . 117
Table 66. I/O static characteristics . . . 118
Table 67. Output voltage characteristics . . . 121
Table 68. I/O AC characteristics . . . 122
Table 69. NRST pin characteristics . . . 123
Table 70. TIMx characteristics . . . 124
Table 71. IWDG min/max timeout period at 40 kHz (LSI) . . . 125
Table 72. WWDG min-max timeout value @72 MHz (PCLK). . . . 125
Table 73. I2C analog filter characteristics. . . . 126
Table 74. SPI characteristics . . . 126
Table 75. I^2S characteristics. . . . 129
Table 76. USB startup time. . . . 131
Table 77. USB DC electrical characteristics . . . 131
Table 78. USB: full-speed electrical characteristics . . . 131
Table 79. ADC characteristics . . . 132
Table 80. Maximum ADC RAIN . . . 135
Table 81. ADC accuracy - limited test conditions, 100-/144-pin packages . . . 137
Table 82. ADC accuracy, 100-pin/144-pin packages . . . 138
Table 83. ADC accuracy - limited test conditions, 64-pin packages. . . . 140
Table 84. ADC accuracy, 64-pin packages . . . 141
Table 85. ADC accuracy at 1MSPS . . . 143
Table 86. DAC characteristics . . . 144
Table 87. Comparator characteristics. . . . 146
Table 88. Operational amplifier characteristics. . . . 148
Table 89. TS characteristics . . . 150
Table 90. Temperature sensor calibration values. . . . 150
Table 91. V_{BAT} monitoring characteristics . . . 151
Table 92. LQFP144 mechanical data . . . 153
Table 93. UFBGA100 package mechanical data . . . 156
Table 94. UFBGA100 recommended PCB design rules (0.5 mm pitch BGA) . . . 157
Table 95. LQPF100 package mechanical data. . . . 159
Table 96. WLCSP100 package mechanical data . . . 163
Table 97. WLCSP100 recommended PCB design rules (0.4 mm pitch) . . . 164

Table 98. LQFP64 package mechanical data 165
Table 99. Package thermal characteristics 168
Table 100. Ordering information scheme 171
Table 101. Document revision history 172

List of figures

Figure 1. STM32F303xD/E block diagram . . . 15
Figure 2. STM32F303xD/E clock tree . . . 21
Figure 3. Infrared transmitter . . . 32
Figure 4. STM32F303xD/E LQFP64 pinout . . . 35
Figure 5. STM32F303xD/E LQFP100 pinout . . . 36
Figure 6. STM32F303xD/E LQFP144 pinout . . . 37
Figure 7. STM32F303xD/E WLCSP100 ballout . . . 38
Figure 8. STM32F303xD/E UFBGA100 ballout . . . 39
Figure 9. STM32F303xD/E memory map . . . 64
Figure 10. Pin loading conditions . . . 68
Figure 11. Pin input voltage . . . 68
Figure 12. Power supply scheme . . . 69
Figure 13. Current consumption measurement scheme . . . 70
Figure 14. Typical V_{BAT} current consumption (LSE and RTC ON/LSEDRV[1:0] 00') . . . 79
Figure 15. High-speed external clock source AC timing diagram . . . 88
Figure 16. Low-speed external clock source AC timing diagram . . . 89
Figure 17. Typical application with an 8 MHz crystal . . . 91
Figure 18. Typical application with a 32.768 kHz crystal . . . 92
Figure 19. HSI oscillator accuracy characterization results for soldered parts . . . 93
Figure 20. Asynchronous non-multiplexed SRAM/PSRAM/NOR read timings . . . 95
Figure 21. Asynchronous non-multiplexed SRAM/PSRAM/NOR write timings . . . 97
Figure 22. Asynchronous multiplexed PSRAM/NOR read timings . . . 99
Figure 23. Asynchronous multiplexed PSRAM/NOR write timings . . . 100
Figure 24. Synchronous multiplexed NOR/PSRAM read timings . . . 102
Figure 25. Synchronous multiplexed PSRAM write timings . . . 103
Figure 26. Synchronous non-multiplexed NOR/PSRAM read timings . . . 105
Figure 27. Synchronous non-multiplexed PSRAM write timings . . . 106
Figure 28. PC Card/CompactFlash controller waveforms for common memory read access . . . 109
Figure 29. PC Card/CompactFlash controller waveforms for common memory write access . . . 109
Figure 30. PC Card/CompactFlash controller waveforms for attribute memory read access . . . 110
Figure 31. PC Card/CompactFlash controller waveforms for attribute memory write access . . . 111
Figure 32. PC Card/CompactFlash controller waveforms for I/O space read access . . . 112
Figure 33. PC Card/CompactFlash controller waveforms for I/O space write access . . . 112
Figure 34. NAND controller read timings . . . 113
Figure 35. NAND controller write timings . . . 114
Figure 36. TC and TTa I/O input characteristics - CMOS port . . . 119
Figure 37. TC and TTa I/O input characteristics - TTL port . . . 120
Figure 38. Five volt tolerant (FT and FTf) I/O input characteristics - CMOS port . . . 120
Figure 39. Five volt tolerant (FT and FTf) I/O input characteristics - TTL port . . . 120
Figure 40. I/O AC characteristics definition . . . 123
Figure 41. Recommended NRST pin protection . . . 124
Figure 42. SPI timing diagram - slave mode and CPHA = 0 . . . 127
Figure 43. SPI timing diagram - slave mode and CPHA = 1(1) . . . 128
Figure 44. SPI timing diagram - master mode(1) . . . 128

Figure 45. I^2S slave timing diagram (Philips protocol)(1) 130
Figure 46. I^2S master timing diagram (Philips protocol)(1) 130
Figure 47. USB timings: definition of data signal rise and fall time 131
Figure 48. ADC typical current consumption on VDDA pin 134
Figure 49. ADC typical current consumption on VREF+ pin 135
Figure 50. ADC accuracy characteristics 143
Figure 51. Typical connection diagram using the ADC 144
Figure 52. 12-bit buffered /non-buffered DAC 146
Figure 53. OPAMP voltage noise versus frequency 150
Figure 54. LQFP144 package outline 152
Figure 55. Recommended footprint for the LQFP144 package 154
Figure 56. LQFP144 marking example (package top view) 155
Figure 57. UFBGA100 package outline 156
Figure 58. Recommended footprint for the UFBGA100 package 157
Figure 59. UFBGA100 marking example (package top view) 158
Figure 60. LQFP100 package outline 159
Figure 61. Recommended footprint for the LQFP100 package 160
Figure 62. LQFP100 marking example (package top view) 161
Figure 63. WLCSP100 package outline 162
Figure 64. Recommended footprint for the WLCSP100 package 163
Figure 65. WLCSP100 marking example (package top view) 164
Figure 66. LQFP64 package outline 165
Figure 67. Recommended footprint for the LQFP64 package 166
Figure 68. LQFP64 marking example (package top view) 167
Figure 69. LQFP100 P_D max vs. T_A 170

1 Introduction

This datasheet provides the ordering information and mechanical device characteristics of the STM32F303xD/E microcontrollers.

This STM32F303xD/E datasheet should be read in conjunction with the reference manual of STM32F303xB/C/D/E, STM32F358xC and STM32F328x4/6/8 devices (RM0316) available on STMicroelectronics website at *www.st.com*.

For information on the ARM® Cortex®-M4 core with FPU, refer to the following documents:

- *Cortex® -M4 with FPU Technical Reference Manual*, available from the www.arm.com website
- *STM32F3 and STM32F4 Series Cortex® -M4 programming manual* (PM0214) available on STMicroelectronics website at *www.st.com*.

2 Description

The STM32F303xD/E family is based on the high-performance ARM® Cortex®-M4 32-bit RISC core with FPU operating at a frequency of 72 MHz, and embedding a floating point unit (FPU), a memory protection unit (MPU) and an embedded trace macrocell (ETM). The family incorporates high-speed embedded memories (512-Kbyte Flash memory, 80-Kbyte SRAM), a flexible memory controller (FSMC) for static memories (SRAM, PSRAM, NOR and NAND), and an extensive range of enhanced I/Os and peripherals connected to an AHB and two APB buses.

The devices offer four fast 12-bit ADCs (5 Msps), seven comparators, four operational amplifiers, two DAC channels, a low-power RTC, up to five general-purpose 16-bit timers, one general-purpose 32-bit timer, and up,to three timers dedicated to motor control. They also feature standard and advanced communication interfaces: up to three I^2Cs, up to four SPIs (two SPIs are with multiplexed full-duplex I^2Ss), three USARTs, up to two UARTs, CAN and USB. To achieve audio class accuracy, the I^2S peripherals can be clocked via an external PLL.

The STM32F303xD/E family operates in the -40 to +85°C and -40 to +105°C temperature ranges from a 2.0 to 3.6 V power supply. A comprehensive set of power-saving mode allows the design of low-power applications.

The STM32F303xD/E family offers devices in different packages ranging from 64 to 144 pins.

Depending on the device chosen, different sets of peripherals are included.

Table 2. STM32F303xD/E family device features and peripheral counts

Peripheral		STM32F303Rx		STM32F303Vx		STM32F303Zx	
Flash (Kbytes)		384	512	384	512	384	512
SRAM (Kbytes) on data bus		64					
CCM (Core Coupled Memory) RAM (Kbytes)		16					
FMC (flexible memory controller)		NO		YES			
Timers	Advanced control	2 (16-bit)(1)		3 (16-bit)			
	General purpose	5 (16-bit) 1 (32-bit)					
	PWM channels (all) (2)	31		40		40	
	Basic	2 (16-bit)					
	PWM channels (except complementary)	22		28		28	
Communication interfaces	SPI (I^2S)(3)	4(2)					
	I^2C	3					
	USART	3					
	UART	2					
	CAN	1					
	USB	1					
GPIOs	Normal I/Os (TC, TTa)	26		37 in WLCSP100,44 in LQFP100 and UFBGA100		45	
	5-volt tolerant I/Os (FT, FTf)	25		42 in LQFP100 40 in WLCSP100 and UFBGA100		70	
DMA channels		12					
Capacitive sensing channels		18		24			
12-bit ADCs		4 22 channels		4 39 channels in LQFP100-pin and UFBGA100 33 channels in WLCSP100		4 40 channels	
12-bit DAC channels							
Analog comparator							
Operational amplifiers							
CPU frequency		72 MHz					
Operating voltage		2.0 to 3.6 V					

Table 2. STM32F303xD/E family device features and peripheral counts (continued)

Peripheral	STM32F303Rx	STM32F303Vx	STM32F303Zx
Operating temperature	Ambient operating temperature: - 40 to 85 °C / - 40 to 105 °C Junction temperature: - 40 to 125 °C		
Packages	LQFP64	LQFP100 WLCSP100 UFBGA100	LQFP144

1. TIM1 and TIM8 are the two available advanced timers.
2. This total number considers also the PWMs generated on the complementary output channels.
3. The SPI interfaces works in an exclusive way in either the SPI mode or the I^2S audio mode.

Figure 1. STM32F303xD/E block diagram

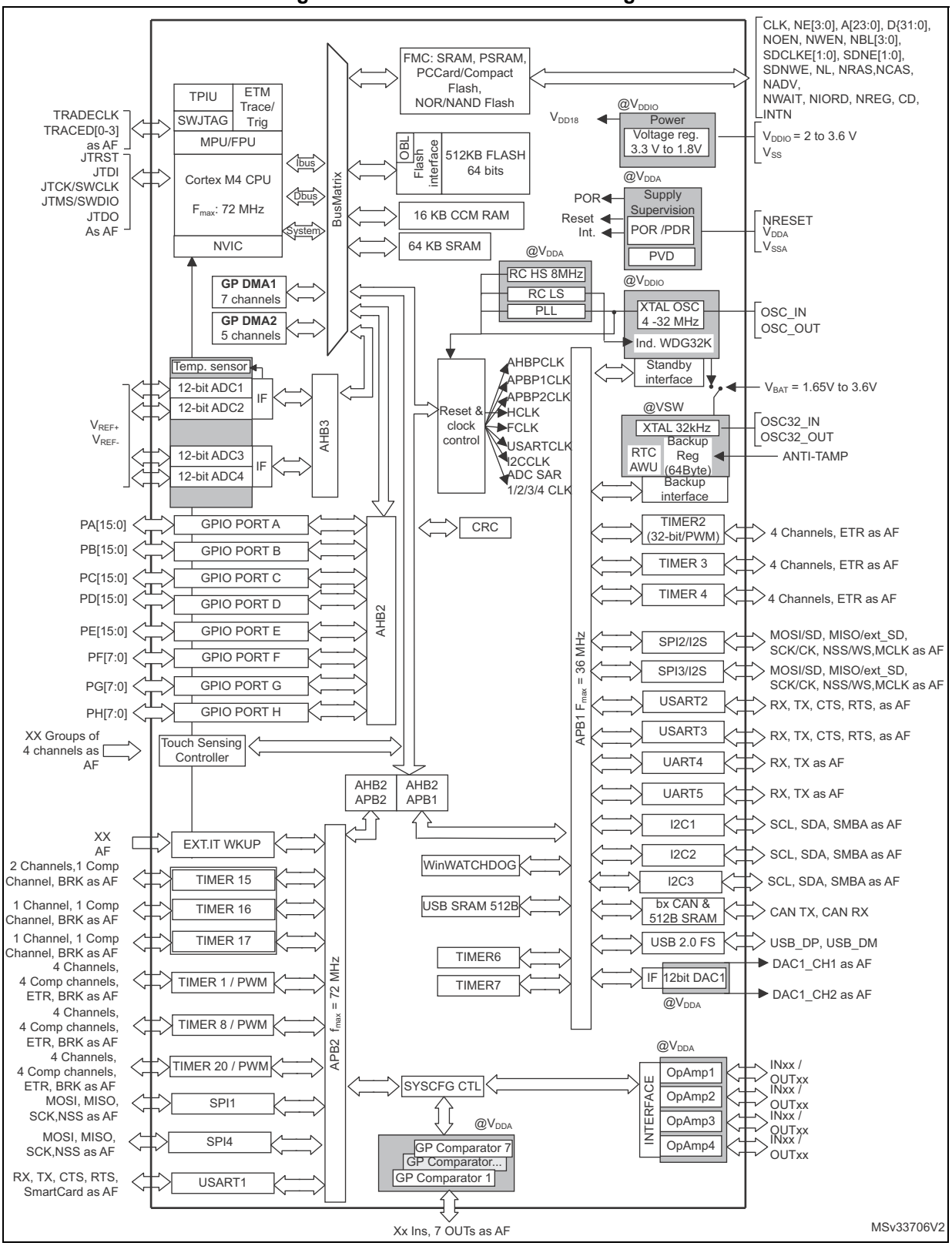

1. AF: alternate function on I/O pins.

3 Functional overview

3.1 ARM® Cortex®-M4 core with FPU with embedded Flash and SRAM

The ARM® Cortex®-M4 processor with FPU is the latest generation of ARM processors for embedded systems. It was developed to provide a low-cost platform that meets the needs of MCU implementation, with a reduced pin count and low-power consumption, while delivering outstanding computational performance and an advanced response to interrupts.

The ARM® Cortex®-M4 32-bit RISC processor with FPU features exceptional code-efficiency, delivering the high-performance expected from an ARM core in the memory size usually associated with 8- and 16-bit devices.

The processor supports a set of DSP instructions which allows efficient signal processing and complex algorithm execution.

Its single precision FPU speeds up software development by using metalanguage development tools, while avoiding saturation.

With its embedded ARM core, the STM32F303xD/E family is compatible with all ARM tools and software.

Figure 1 shows the general block diagram of the STM32F303xD/E family devices.

3.2 Memory protection unit (MPU)

The memory protection unit (MPU) is used to separate the processing of tasks from the data protection. The MPU manage up to 8 protection areas that are further divided up into 8 subareas. The protection area sizes are between 32 bytes and the whole 4 gigabytes of addressable memory.

The memory protection unit is especially helpful for applications where some critical or certified code has to be protected against the misbehavior of other tasks. It is usually managed by an RTOS (real-time operating system). If a program accesses a memory location that is prohibited by the MPU, the RTOS detects it and takes action. In an RTOS environment, the kernel dynamically updates the MPU area setting, based on the process to be executed.

The MPU is optional and can be bypassed for applications that do not need it.

3.3 Embedded Flash memory

All STM32F303xD/E devices feature 384/512 Kbyte of embedded Flash memory available for storing programs and data. The Flash memory access time is adjusted to the CPU clock frequency (0 wait state from 0 to 24 MHz, 1 wait state from 24 to 48 MHz and 2 wait states above).

3.4 Embedded SRAM

STM32F303xD/E devices feature 80 Kbytes of embedded SRAM with hardware parity check. The memory can be accessed in read/write at CPU clock speed with 0 wait states, allowing the CPU to achieve 90 Dhrystone MIPS at 72 MHz (when running code from the CCM (Core Coupled Memory) RAM).

- 16 Kbytes of CCM SRAM mapped on both instruction and data bus, used to execute critical routines or to access data (parity check on all of CCM SRAM).
- 64 Kbytes of SRAM mapped on the data bus (parity check on first 32 Kbytes of SRAM).

3.5 Boot modes

At startup, Boot0 pin and Boot1 option bit are used to select one of three boot options:

- Boot from user Flash
- Boot from system memory
- Boot from embedded SRAM

The boot loader is located in the system memory. It is used to reprogram the Flash memory by using USART1 (PA9/PA10), USART2 (PA2/PA3) or USB (PA11/PA12) through DFU (device firmware upgrade).

3.6 Cyclic redundancy check (CRC)

The CRC (cyclic redundancy check) calculation unit is used to get a CRC code using a configurable generator polynomial value and size.

Among other applications, CRC-based techniques are used to verify data transmission or storage integrity. In the scope of the EN/IEC 60335-1 standard, they offer a means of verifying the Flash memory integrity. The CRC calculation unit helps compute a signature of the software during runtime, to be compared with a reference signature generated at linktime and stored at a given memory location.

3.7 Power management

3.7.1 Power supply schemes

- V_{SS}, V_{DD} = 2.0 to 3.6 V: external power supply for I/Os and the internal regulator. It is provided externally through V_{DD} pins.
- V_{SSA}, V_{DDA} = 2.0 to 3.6 V: external analog power supply for ADC, DAC, comparators, operational amplifier, reset blocks, RCs and PLL. The minimum voltage to be applied to V_{DDA} differs from one analog peripheral to another. *Table 3* provides the summary of the V_{DDA} ranges for analog peripherals. The V_{DDA} voltage level must always be greater than or equal to the V_{DD} voltage level and must be provided first.

Table 3. External analog supply values for analog peripherals

Analog peripheral	Minimum V_{DDA} supply	Maximum V_{DDA} supply
ADC/COMP	2.0 V	3.6 V
DAC/OPAMP	2.4 V	3.6 V

- V_{BAT} = 1.65 to 3.6 V: power supply for RTC, external clock 32 kHz oscillator and backup registers (through power switch) when V_{DD} is not present.

3.7.2 Power supply supervisor

The device has an integrated power-on reset (POR) and power-down reset (PDR) circuits. They are always active, and ensure proper operation above a threshold of 2 V. The device remains in reset mode when the monitored supply voltage is below a specified threshold, $V_{POR/PDR}$, without the need for an external reset circuit.

- The POR monitors only the V_{DD} supply voltage. During the startup phase it is required that V_{DDA} should arrive first and be greater than or equal to V_{DD}.
- The PDR monitors both the V_{DD} and V_{DDA} supply voltages, however the V_{DDA} power supply supervisor can be disabled (by programming a dedicated Option bit) to reduce the power consumption if the application design ensures that V_{DDA} is higher than or equal to V_{DD}.

The device features an embedded programmable voltage detector (PVD) that monitors the V_{DD} power supply and compares it to the V_{PVD} threshold. An interrupt can be generated when V_{DD} drops below the V_{PVD} threshold and/or when V_{DD} is higher than the V_{PVD} threshold. The interrupt service routine can then generate a warning message and/or put the MCU into a safe state. The PVD is enabled by software.

3.7.3 Voltage regulator

The regulator has three operation modes: main (MR), low power (LPR), and power-down.

- The MR mode is used in the nominal regulation mode (Run)
- The LPR mode is used in Stop mode.
- The power-down mode is used in Standby mode: the regulator output is in high impedance, and the kernel circuitry is powered down thus inducing zero consumption.

The voltage regulator is always enabled after reset. It is disabled in Standby mode.

3.7.4 Low-power modes

The STM32F303xD/E supports three low-power modes to achieve the best compromise between low power consumption, short startup time and available wakeup sources:

- Sleep mode

  In Sleep mode, only the CPU is stopped. All peripherals continue to operate and wake up the CPU when an interrupt/event occurs.

- Stop mode

  Stop mode achieves the lowest power consumption while retaining the content of SRAM and registers. All clocks in the 1.8 V domain are stopped, the PLL, the HSI RC and the HSE crystal oscillators are disabled. The voltage regulator can also be put either in normal or in low-power mode.

  The device can be woken up from Stop mode by any of the EXTI line. The EXTI line source can be one of the 16 external lines, the PVD output, the USB wakeup, the RTC alarm, COMPx, I2Cx or U(S)ARTx.

- Standby mode

  The Standby mode is used to achieve the lowest power consumption. The internal voltage regulator is switched off so that the entire 1.8 V domain is powered off. The PLL, the HSI RC and the HSE crystal oscillators are also switched off. After entering Standby mode, SRAM and register contents are lost except for registers in the Backup domain and Standby circuitry.

  The device exits Standby mode when an external reset (NRST pin), an IWDG reset, a rising edge on the WKUP pin or an RTC alarm occurs.

Note: The RTC, the IWDG and the corresponding clock sources are not stopped by entering Stop or Standby mode.

3.8 Interconnect matrix

Several peripherals have direct connections between them. This allows autonomous communication between peripherals, saving CPU resources thus power supply consumption. In addition, these hardware connections allow fast and predictable latency.

Table 4. STM32F303xD/E peripheral interconnect matrix

Interconnect source	Interconnect destination	Interconnect action
TIMx	TIMx	Timers synchronization or chaining
	ADCx DAC1	Conversion triggers
	DMA	Memory to memory transfer trigger
	Compx	Comparator output blanking
COMPx	TIMx	Timer input: OCREF_CLR input, input capture
ADCx	TIMx	Timer triggered by analog watchdog

Table 4. STM32F303xD/E peripheral interconnect matrix (continued)

Interconnect source	Interconnect destination	Interconnect action
GPIO RTCCLK HSE/32 MC0	TIM16	Clock source used as input channel for HSI and LSI calibration
CSS CPU (hard fault) COMPx GPIO	TIM1, TIM8, TIM20 TIM15, 16, 17	Timer break
GPIO	TIMx	External trigger, timer break
	ADCx DAC1	Conversion external trigger
DAC1	COMPx	Comparator inverting input

Note: For more details about the interconnect actions, refer to the corresponding sections in the STM32F303xD/Ereference manual (RM0316).

3.9 Clocks and startup

System clock selection is performed on startup, however the internal RC 8 MHz oscillator is selected as default CPU clock on reset. An external 4-32 MHz clock can be selected, in which case it is monitored for failure. If failure is detected, the system automatically switches back to the internal RC oscillator. A software interrupt is generated if enabled. Similarly, full interrupt management of the PLL clock entry is available when necessary (for example with failure of an indirectly used external oscillator).

Several prescalers allow to configure the AHB frequency, the high speed APB (APB2) and the low speed APB (APB1) domains. The maximum frequency of the AHB and the high speed APB domains is 72 MHz, while the maximum allowed frequency of the low speed APB domain is 36 MHz.

Figure 2. STM32F303xD/E clock tree

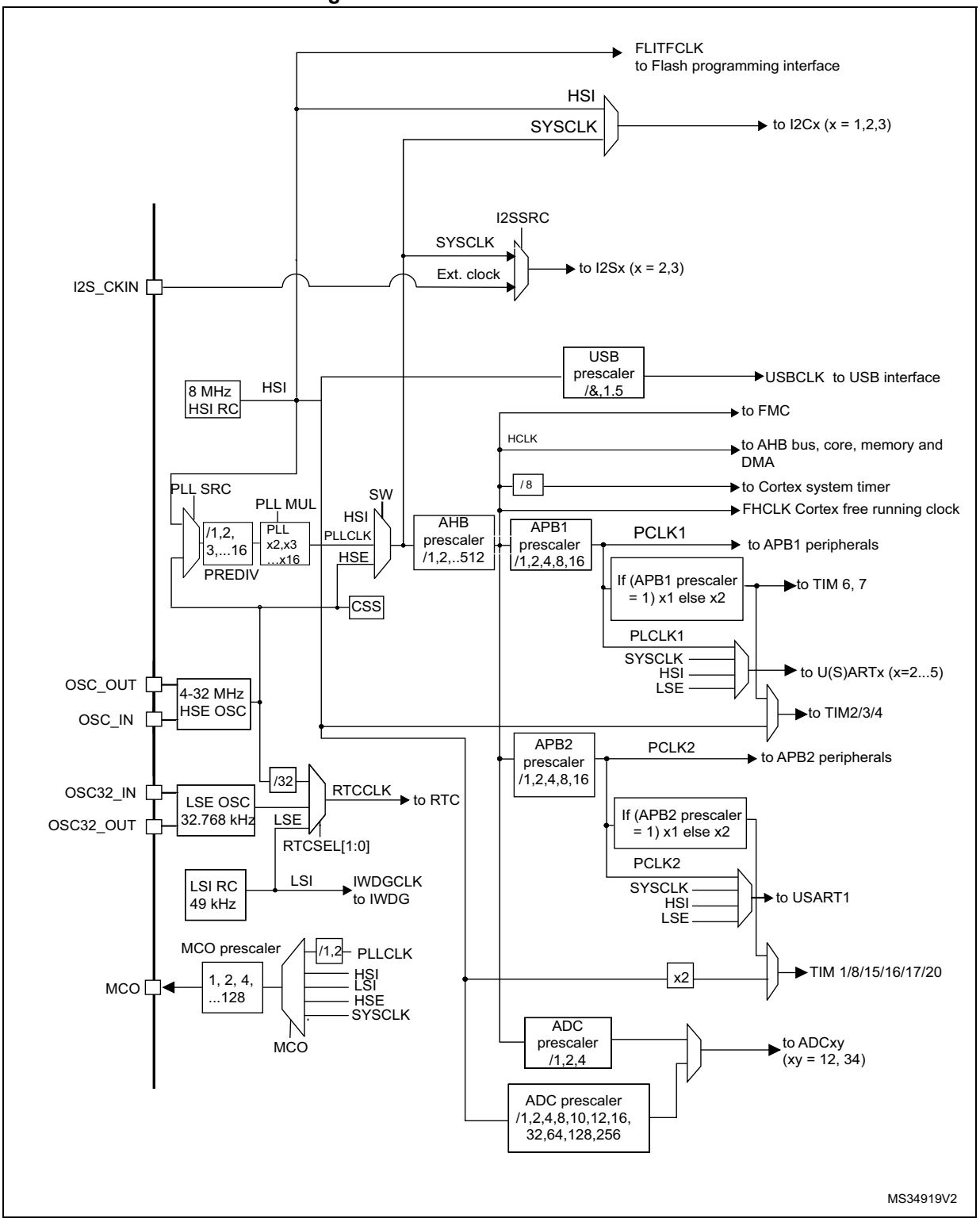

3.10 General-purpose input/outputs (GPIOs)

Each of the GPIO pins can be configured by software as output (push-pull or open-drain), as input (with or without pull-up or pull-down) or as peripheral alternate function. Most of the GPIO pins are shared with digital or analog alternate functions. All GPIOs are high current capable except for analog inputs.

The I/Os alternate function configuration can be locked if needed following a specific sequence to avoid spurious writing to the I/Os registers.

Fast I/O handling allows I/O toggling up to 36 MHz.

3.11 Direct memory access (DMA)

The flexible general-purpose DMA is able to manage memory-to-memory, peripheral-to-memory and memory-to-peripheral transfers. The DMA controller supports circular buffer management, avoiding the generation of interrupts when the controller reaches the end of the buffer.

Each of the 12 DMA channels is connected to dedicated hardware DMA requests, with software trigger support for each channel. Configuration is done by software and transfer sizes between source and destination are independent.

The DMA is used with the main peripherals: SPI, I^2C, USART, general-purpose timers, DAC and ADC.

3.12 Flexible static memory controller (FSMC)

The flexible static memory controller (FSMC) includes two memory controllers:

- The NOR/PSRAM memory controller,
- The NAND/PC Card memory controller.

This memory controller is also named Flexible memory controller (FMC).

The main features of the FMC controller are the following:

- Interface with static-memory mapped devices including:
  - Static random access memory (SRAM),
  - NOR Flash memory/OneNAND Flash memory,
  - PSRAM (four memory banks),
  - NAND Flash memory with ECC hardware to check up to 8 Kbyte of data,
  - 16-bit PC Card compatible devices.
- 8-,16-bit data bus width,
- Independent Chip Select control for each memory bank,
- Independent configuration for each memory bank,
- Write FIFO,
- LCD parallel interface.

The FMC can be configured to interface seamlessly with most graphic LCD controllers. It supports the Intel 8080 and Motorola 6800 modes, and is flexible enough to adapt to specific LCD interfaces. This LCD parallel interface capability makes it easy to build cost

effective graphic applications using LCD modules with embedded controllers or high performance solutions using external controllers with dedicated acceleration.

3.13 Interrupts and events

3.13.1 Nested vectored interrupt controller (NVIC)

The STM32F303xD/E devices embed a nested vectored interrupt controller (NVIC) able to handle up to 73 maskable interrupt channels and 16 priority levels.

The NVIC benefits are the following:

- Closely coupled NVIC gives low latency interrupt processing
- Interrupt entry vector table address passed directly to the core
- Closely coupled NVIC core interface
- Allows early processing of interrupts
- Processing of late arriving higher priority interrupts
- Support for tail chaining
- Processor state automatically saved
- Interrupt entry restored on interrupt exit with no instruction overhead

The NVIC hardware block provides flexible interrupt management features with minimal interrupt latency.

3.14 Fast analog-to-digital converter (ADC)

Four fast analog-to-digital converters 5 MSPS, with selectable resolution between 12 and 6 bit, are embedded in the STM32F303xD/E family devices. The ADCs have up to 40 external channels. Some of the external channels are shared between ADC1&2 and between ADC3&4. The ADCs can perform conversions in single-shot or scan modes. In scan mode, automatic conversion is performed on a selected group of analog inputs.

The ADCs have also internal channels: Temperature sensor connected to ADC1 channel 16, VBAT/2 connected to ADC1 channel 17, Voltage reference VREFINT connected to the 4 ADCs channel 18, VREFOPAMP1 connected to ADC1 channel 15, VREFOPAMP2 connected to ADC2 channel 17, VREFOPAMP3 connected to ADC3 channel 17 and VREFOPAMP4 connected to ADC4 channel 17.

Additional logic functions embedded in the ADC interface allow:

- Simultaneous sample and hold
- Interleaved sample and hold
- Single-shunt phase current reading techniques.

The ADC can be served by the DMA controller.

Three analog watchdogs are available per ADC.

The analog watchdog feature allows very precise monitoring of the converted voltage of one, some or all selected channels. An interrupt is generated when the converted voltage is outside the programmed thresholds.

The events generated by the general-purpose timers and the advanced-control timers (TIM1, TIM8 and TIM20) can be internally connected to the ADC start trigger and injection trigger, respectively, to allow the application to synchronize A/D conversion and timers.

3.14.1 Temperature sensor

The temperature sensor (TS) generates a voltage V_{SENSE} that varies linearly with temperature.

The temperature sensor is internally connected to the ADC1_IN16 input channel which is used to convert the sensor output voltage into a digital value.

The sensor provides good linearity but it has to be calibrated to obtain good overall accuracy of the temperature measurement. As the offset of the temperature sensor varies from chip to chip due to process variation, the uncalibrated internal temperature sensor is suitable for applications that detect temperature changes only.

To improve the accuracy of the temperature sensor measurement, each device is individually factory-calibrated by ST. The temperature sensor factory calibration data are stored by ST in the system memory area, accessible in read-only mode.

3.14.2 Internal voltage reference (V_{REFINT})

The internal voltage reference (V_{REFINT}) provides a stable (bandgap) voltage output for the ADC and Comparators. V_{REFINT} is internally connected to the ADCx_IN18, x=1...4 input channel. The precise voltage of V_{REFINT} is individually measured for each part by ST during production test and stored in the system memory area. It is accessible in read-only mode.

3.14.3 V_{BAT} battery voltage monitoring

This embedded hardware feature allows the application to measure the V_{BAT} battery voltage using the internal ADC channel ADC1_IN17. As the V_{BAT} voltage may be higher than V_{DDA}, and thus outside the ADC input range, the V_{BAT} pin is internally connected to a bridge divider by 2. As a consequence, the converted digital value is half the V_{BAT} voltage.

3.14.4 OPAMP reference voltage (VREFOPAMP)

Every OPAMP reference voltage can be measured using a corresponding ADC internal channel: VREFOPAMP1 connected to ADC1 channel 15, VREFOPAMP2 connected to ADC2 channel 17, VREFOPAMP3 connected to ADC3 channel 17 and VREFOPAMP4 connected to ADC4 channel 17.

3.15 Digital-to-analog converter (DAC)

Two 12-bit buffered DAC channels can be used to convert digital signals into analog voltage signal outputs. The chosen design structure is composed of integrated resistor strings and an amplifier in inverting configuration.

This digital interface supports the following features:

- Two DAC output channels
- 8-bit or 10-bit monotonic output

- Left or right data alignment in 12-bit mode
- Synchronized update capability
- Noise-wave generation
- Triangular-wave generation
- Dual DAC channel independent or simultaneous conversions
- DMA capability (for each channel)
- External triggers for conversion
- Input voltage reference VREF+

3.16 Operational amplifier (OPAMP)

The STM32F303xD/E embed four operational amplifiers with external or internal follower routing and PGA capability (or even amplifier and filter capability with external components). When an operational amplifier is selected, an external ADC channel is used to enable output measurement.

The operational amplifier features:

- 8.2 MHz bandwidth
- 0.5 mA output capability
- Rail-to-rail input/output
- In PGA mode, the gain is programmed to be 2, 4, 8 or 16.

3.17 Ultra-fast comparators (COMP)

The STM32F303xD/E devices embed seven ultra-fast rail-to-rail comparators with programmable reference voltage (internal or external) and selectable output polarity.

The reference voltage can be one of the following:

- External I/O
- DAC output pin
- Internal reference voltage or submultiple (1/4, 1/2, 3/4). Refer to *Table 23: Embedded internal reference voltage* for the value and precision of the internal reference voltage.

All comparators can wake up from STOP mode, generate interrupts and breaks for the timers.

3.18 Timers and watchdogs

The STM32F303xD/E include three advanced control timers, up to six general-purpose timers, two basic timers, two watchdog timers and one SysTick timer. The table below compares the features of the advanced control, general purpose and basic timers.

Table 5. Timer feature comparison

Timer type	Timer	Counter resolution	Counter type	Prescaler factor	DMA request generation	Capture/ compare channels	Complementary outputs
Advanced	TIM1, TIM8, TIM20	16-bit	Up, Down, Up/Down	Any integer between 1 and 65536	Yes	4	Yes
General-purpose	TIM2	32-bit	Up, Down, Up/Down	Any integer between 1 and 65536	Yes	4	No
General-purpose	TIM3, TIM4	16-bit	Up, Down, Up/Down	Any integer between 1 and 65536	Yes	4	No
General-purpose	TIM15	16-bit	Up	Any integer between 1 and 65536	Yes	2	1
General-purpose	TIM16, TIM17	16-bit	Up	Any integer between 1 and 65536	Yes	1	1
Basic	TIM6, TIM7	16-bit	Up	Any integer between 1 and 65536	Yes	0	No

Note: TIM1/8/20/2/3/4/15/16/17 can have PLL as clock source, and therefore can be clocked at 144 MHz.

3.18.1 Advanced timers (TIM1, TIM8, TIM20)

The advanced-control timers (TIM1, TIM8, TIM20) can each be seen as a three-phase PWM multiplexed on six channels. They have complementary PWM outputs with programmable inserted dead-times. They can also be seen as complete general-purpose timers. The four independent channels can be used for:

- Input capture
- Output compare
- PWM generation (edge or center-aligned modes) with full modulation capability (0-100%)
- One-pulse mode output

In debug mode, the advanced-control timer counter can be frozen and the PWM outputs disabled to turn off any power switches driven by these outputs.

Many features are shared with those of the general-purpose TIM timers (described in *Section 3.18.2*) using the same architecture, so the advanced-control timers can work together with the TIM timers via the Timer Link feature for synchronization or event chaining.

3.18.2 General-purpose timers (TIM2, TIM3, TIM4, TIM15, TIM16, TIM17)

There are up to six synchronizable general-purpose timers embedded in the STM32F303xD/E (see *Table 5* for differences). Each general-purpose timer can be used to generate PWM outputs, or act as a simple time base.

- TIM2, 3, and TIM4

  These are full-featured general-purpose timers:

  – TIM2 has a 32-bit auto-reload up/downcounter and 32-bit prescaler

  – TIM3 and 4 have 16-bit auto-reload up/downcounters and 16-bit prescalers.

  These timers all feature 4 independent channels for input capture/output compare, PWM or one-pulse mode output. They can work together, or with the other general-purpose timers via the Timer Link feature for synchronization or event chaining.

  The counters can be frozen in debug mode.

  All have independent DMA request generation and support quadrature encoders.

- TIM15, 16 and 17

  These three timers general-purpose timers with mid-range features:

  They have 16-bit auto-reload upcounters and 16-bit prescalers.

  – TIM15 has 2 channels and 1 complementary channel

  – TIM16 and TIM17 have 1 channel and 1 complementary channel

  All channels can be used for input capture/output compare, PWM or one-pulse mode output.

  The timers can work together via the Timer Link feature for synchronization or event chaining. The timers have independent DMA request generation.

  The counters can be frozen in debug mode.

3.18.3 Basic timers (TIM6, TIM7)

These timers are mainly used for DAC trigger generation. They can also be used as a generic 16-bit time base.

3.18.4 Independent watchdog (IWDG)

The independent watchdog is based on a 12-bit downcounter and 8-bit prescaler. It is clocked from an independent 40 kHz internal RC and as it operates independently from the main clock, it can operate in Stop and Standby modes. It can be used either as a watchdog to reset the device when a problem occurs, or as a free running timer for application timeout management. It is hardware or software configurable through the option bytes. The counter can be frozen in debug mode.

3.18.5 Window watchdog (WWDG)

The window watchdog is based on a 7-bit downcounter that can be set as free running. It is used as a watchdog to reset the device when a problem occurs. It is clocked from the main clock. It has an early warning interrupt capability and the counter can be frozen in debug mode.

3.18.6 SysTick timer

This timer is dedicated to real-time operating systems, but could also be used as a standard down counter. It features:

- A 24-bit down counter
- Autoreload capability
- Maskable system interrupt generation when the counter reaches 0.
- Programmable clock source

3.19 Real-time clock (RTC) and backup registers

The RTC and the 16 backup registers are supplied through a switch that takes power from either the V_{DD} supply when present or the V_{BAT} pin. The backup registers are sixteen 32-bit registers used to store 64 bytes of user application data when V_{DD} power is not present.

They are not reset by a system or power reset, or when the device wakes up from Standby mode.

The RTC is an independent BCD timer/counter. It supports the following features:

- Calendar with subsecond, seconds, minutes, hours (12 or 24 format), week day, date, month, year, in BCD (binary-coded decimal) format.
- Reference clock detection: a more precise second source clock (50 or 60 Hz) can be used to enhance the calendar precision.
- Automatic correction for 28, 29 (leap year), 30 and 31 days of the month.
- Two programmable alarms with wake up from Stop and Standby mode capability.
- On-the-fly correction from 1 to 32767 RTC clock pulses. This can be used to synchronize it with a master clock.
- Digital calibration circuit with 1 ppm resolution, to compensate for quartz crystal inaccuracy.
- Three anti-tamper detection pins with programmable filter. The MCU can be woken up from Stop and Standby modes on tamper event detection.
- Timestamp feature which can be used to save the calendar content. This function can be triggered by an event on the timestamp pin, or by a tamper event. The MCU can be woken up from Stop and Standby modes on timestamp event detection.
- 17-bit Auto-reload counter for periodic interrupt with wakeup from STOP/STANDBY capability.

The RTC clock sources can be:

- A 32.768 kHz external crystal
- A resonator or oscillator
- The internal low-power RC oscillator (typical frequency of 40 kHz)
- The high-speed external clock divided by 32.

3.20 Inter-integrated circuit interface (I^2C)

Up to three I^2C bus interfaces can operate in multimaster and slave modes. They can support standard (up to 100 kHz), fast (up to 400 kHz) and fast mode + (up to 1 MHz) modes.

All I^2C bus interfaces support 7-bit and 10-bit addressing modes, multiple 7-bit slave addresses (2 addresses, 1 with configurable mask). They also include programmable analog and digital noise filters.

Table 6. Comparison of I^2C analog and digital filters

-	Analog filter	Digital filter
Pulse width of suppressed spikes	≥ 50 ns	Programmable length from 1 to 15 I^2C peripheral clocks
Benefits	Available in Stop mode	1. Extra filtering capability vs. standard requirements. 2. Stable length
Drawbacks	Variations depending on temperature, voltage, process	Wakeup from Stop on address match is not available when digital filter is enabled.

In addition, they provide hardware support for SMBUS 2.0 and PMBUS 1.1: ARP capability, Host notify protocol, hardware CRC (PEC) generation/verification, timeouts verifications and ALERT protocol management. They also have a clock domain independent from the CPU clock, allowing the I2Cx (x=1,2,3) to wake up the MCU from Stop mode on address match.

The I^2C interfaces can be served by the DMA controller.

Refer to *Table 7* for the features available in I2C1, I2C2 and I2C3.

Table 7. STM32F303xD/E I^2C implementation

I^2C features(1)	I2C1	I2C2	I2C3
7-bit addressing mode	X	X	X
10-bit addressing mode	X	X	X
Standard mode (up to 100 kbit/s)	X	X	X
Fast mode (up to 400 kbit/s)	X	X	X
Fast Mode Plus with 20mA output drive I/Os (up to 1 Mbit/s)	X	X	X
Independent clock	X	X	X
SMBus	X	X	X
Wakeup from STOP	X	X	X

1. X = supported.

3.21 Universal synchronous/asynchronous receiver transmitter (USART)

The STM32F303xD/E devices have three embedded universal synchronous/asynchronous receiver transmitters (USART1, USART2 and USART3).

The USART interfaces are able to communicate at speeds of up to 9 Mbit/s.

They provide hardware management of the CTS and RTS signals, they support IrDA SIR ENDEC, the multiprocessor communication mode, the single-wire half-duplex

communication mode and have LIN Master/Slave capability. The USART interfaces can be served by the DMA controller.

3.22 Universal asynchronous receiver transmitter (UART)

The STM32F303xD/E devices have 2 embedded universal asynchronous receiver transmitters (UART4, and UART5). The UART interfaces support IrDA SIR ENDEC, multiprocessor communication mode and single-wire half-duplex communication mode. The UART4 interface can be served by the DMA controller.

Refer to *Table 8* for the features available in all U(S)ART interfaces.

Table 8. USART features

USART modes/features(1)	USART1	USART2	USART3	UART4	UART5
Hardware flow control for modem	X	X	X	-	-
Continuous communication using DMA	X	X	X	X	-
Multiprocessor communication	X	X	X	X	X
Synchronous mode	X	X	X	-	-
Smartcard mode	X	X	X	-	-
Single-wire half-duplex communication	X	X	X	X	X
IrDA SIR ENDEC block	X	X	X	X	X
LIN mode	X	X	X	X	X
Dual clock domain and wakeup from Stop mode	X	X	X	X	X
Receiver timeout interrupt	X	X	X	X	X
Modbus communication	X	X	X	X	X
Auto baud rate detection	X	X	X	-	-
Driver Enable	X	X	X	-	-

1. X = supported.

3.23 Serial peripheral interface (SPI)/Inter-integrated sound interfaces (I^2S)

Up to four SPIs are able to communicate up to 18 Mbit/s in slave and master modes in full-duplex and half-duplex communication modes. The 3-bit prescaler gives 8 master mode frequencies and the frame size is configurable from 4 bits to 16 bits.

Two standard I^2S interfaces (multiplexed with SPI2 and SPI3) supporting four different audio standards can operate as master or slave at half-duplex and full duplex communication modes. They can be configured to transfer 16 and 24 or 32 bits with 16-bit or 32-bit data resolution and synchronized by a specific signal. Audio sampling frequency from 8 kHz up to 192 kHz can be set by 8-bit programmable linear prescaler. When operating in master mode it can output a clock for an external audio component at 256 times the sampling frequency.

Refer to *Table 9* for the features available in SPI1, SPI2, SPI3 and SPI4.

Table 9. STM32F303xD/E SPI/I^{2}S implementation

SPI features[1]	SPI1	SPI2	SPI3	SPI4
Hardware CRC calculation	X	X	X	X
Rx/Tx FIFO	X	X	X	X
NSS pulse mode	X	X	X	X
I^{2}S mode	-	X	X	-
TI mode	X	X	X	X

1. X = supported.

3.24 Controller area network (CAN)

The CAN is compliant with specifications 2.0A and B (active) with a bit rate up to 1 Mbit/s. It can receive and transmit standard frames with 11-bit identifiers as well as extended frames with 29-bit identifiers. It has three transmit mailboxes, two receive FIFOs with 3 stages and 14 scalable filter banks.

3.25 Universal serial bus (USB)

The STM32F303xD/E embeds a full-speed USB device peripheral compliant with the USB specification version 2.0. The USB interface implements a full-speed (12 Mbit/s) function interface with added support for USB 2.0 Link Power Management. It has software-configurable endpoint setting with packet memory up-to 1 Kbyte (256 bytes are used for CAN peripheral if enabled) and suspend/resume support.

The dedicated 48 MHz clock is generated from the internal main PLL (the clock source must use a HSE crystal oscillator).

3.26 Infrared transmitter

The STM32F303xD/E devices provide an infrared transmitter solution. The solution is based on internal connections between TIM16 and TIM17 as shown in the figure below.

TIM17 is used to provide the carrier frequency and TIM16 provides the main signal to be sent. The infrared output signal is available on PB9 or PA13.

To generate the infrared remote control signals, TIM16 channel 1 and TIM17 channel 1 must be properly configured to generate correct waveforms. All standard IR pulse modulation modes can be obtained by programming the two timers output compare channels.

Figure 3. Infrared transmitter

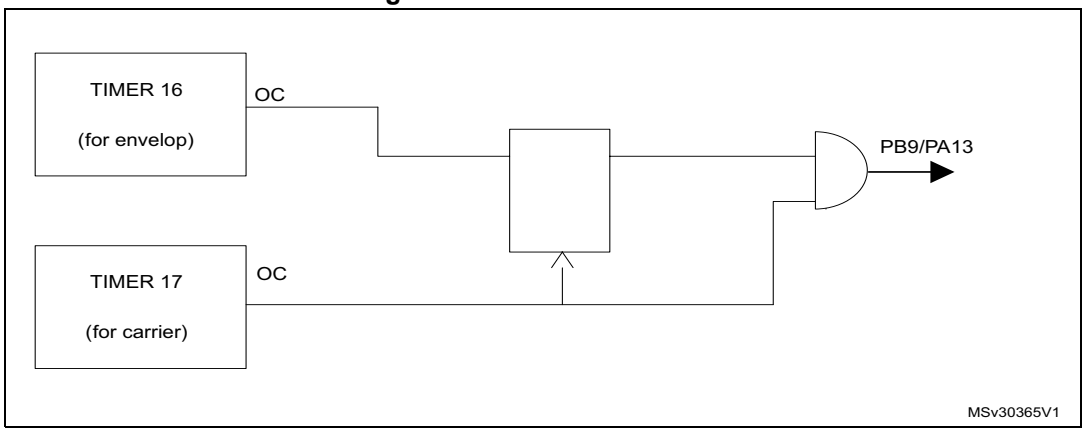

3.27 Touch sensing controller (TSC)

The STM32F303xD/E devices provide a simple solution for adding capacitive sensing functionality to any application. These devices offer up to 24 capacitive sensing channels distributed over 8 analog I/O groups.

Capacitive sensing technology is able to detect the presence of a finger near a sensor which is protected from direct touch by a dielectric (glass, plastic, etc.). The capacitive variation introduced by the finger (or any conductive object) is measured using a proven implementation based on a surface charge transfer acquisition principle. It consists of charging the sensor capacitance and then transferring a part of the accumulated charges into a sampling capacitor until the voltage across this capacitor has reached a specific threshold. To limit the CPU bandwidth usage this acquisition is directly managed by the hardware touch sensing controller and only requires few external components to operate.

The touch sensing controller is fully supported by the STMTouch touch sensing firmware library which is free to use and allows touch sensing functionality to be implemented reliably in the end application.

Table 10. Capacitive sensing GPIOs available on STM32F303xD/E devices

Group	Capacitive sensing signal name	Pin name	Group	Capacitive sensing signal name	Pin name
1	TSC_G1_IO1	PA0	5	TSC_G5_IO1	PB3
	TSC_G1_IO2	PA1		TSC_G5_IO2	PB4
	TSC_G1_IO3	PA2		TSC_G5_IO3	PB6
	TSC_G1_IO4	PA3		TSC_G5_IO4	PB7
2	TSC_G2_IO1	PA4	6	TSC_G6_IO1	PB11
	TSC_G2_IO2	PA5		TSC_G6_IO2	PB12
	TSC_G2_IO3	PA6		TSC_G6_IO3	PB13
	TSC_G2_IO4	PA7		TSC_G6_IO4	PB14

Table 10. Capacitive sensing GPIOs available on STM32F303xD/E devices (continued)

Group	Capacitive sensing signal name	Pin name	-	Group	Capacitive sensing signal name	Pin name
3	TSC_G3_IO1	PC5	-	7	TSC_G7_IO1	PE2
	TSC_G3_IO2	PB0	-		TSC_G7_IO2	PE3
	TSC_G3_IO3	PB1	-		TSC_G7_IO3	PE4
	TSC_G3_IO4	PB2	-		TSC_G7_IO4	PE5
4	TSC_G4_IO1	PA9	-	8	TSC_G8_IO1	PD12
	TSC_G4_IO2	PA10	-		TSC_G8_IO2	PD13
	TSC_G4_IO3	PA13	-		TSC_G8_IO3	PD14
	TSC_G4_IO4	PA14	-		TSC_G8_IO4	PD15

Table 11. Number of capacitive sensing channels available on STM32F303xD/E devices

Analog I/O group	Number of capacitive sensing channels	
	STM32F303VE/ZE	STM32F303RE
G1	3	3
G2	3	3
G3	3	3
G4	3	3
G5	3	3
G6	3	3
G7	3	0
G8	3	0
Number of capacitive sensing channels	24	18

3.28 Development support

3.28.1 Serial wire JTAG debug port (SWJ-DP)

The ARM SWJ-DP Interface is embedded, and is a combined JTAG and serial wire debug port that enables either a serial wire debug or a JTAG probe to be connected to the target.

The JTAG TMS and TCK pins are shared respectively with SWDIO and SWCLK and a specific sequence on the TMS pin is used to switch between JTAG-DP and SW-DP.

3.28.2 Embedded Trace Macrocell

The ARM embedded trace macrocell (ETM™) provides a greater visibility of the instruction and data flow inside the CPU core by streaming compressed data at a very high rate from the STM32F303xD/E through a small number of ETM™ pins to an external hardware trace

port analyzer (TPA) device. The TPA is connected to a host computer using a high-speed channel. Real-time instruction and data flow activity can be recorded and then formatted for display on the host computer running debugger software. TPA hardware is commercially available from common development tool vendors. It operates with third party debugger software tools.

4 Pinout and pin description

Figure 4. STM32F303xD/E LQFP64 pinout

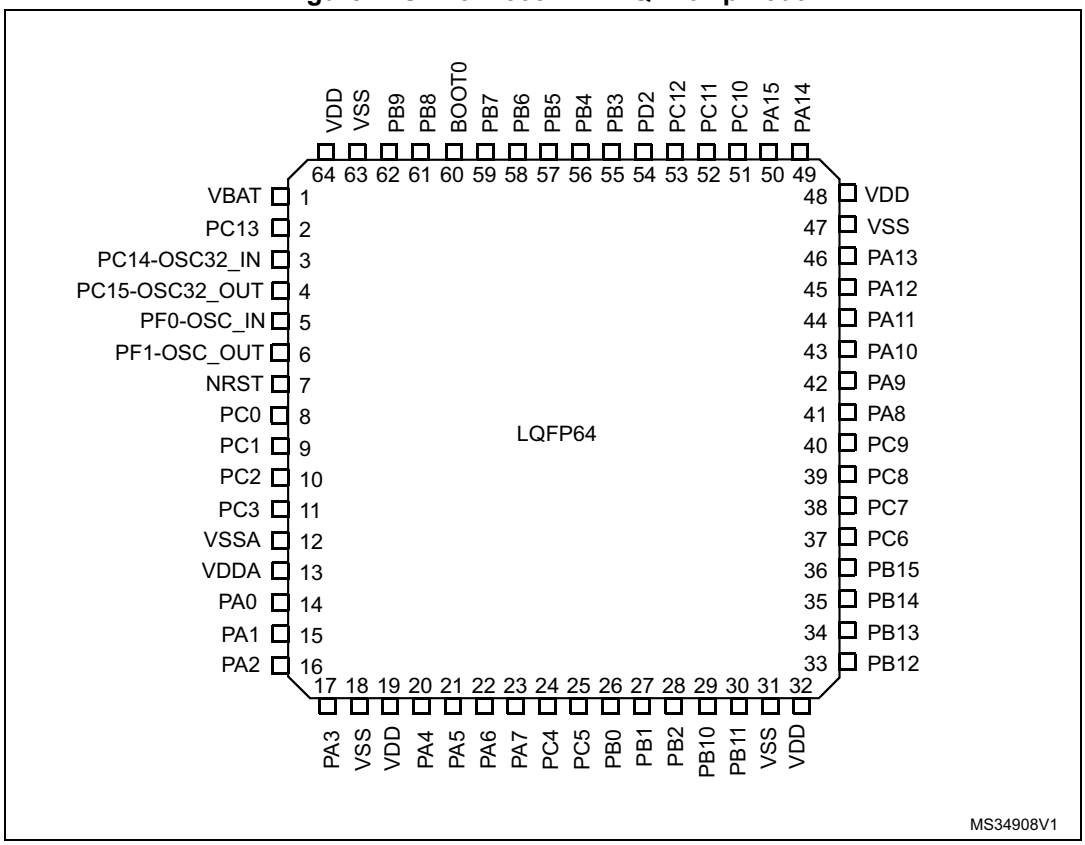

Figure 5. STM32F303xD/E LQFP100 pinout

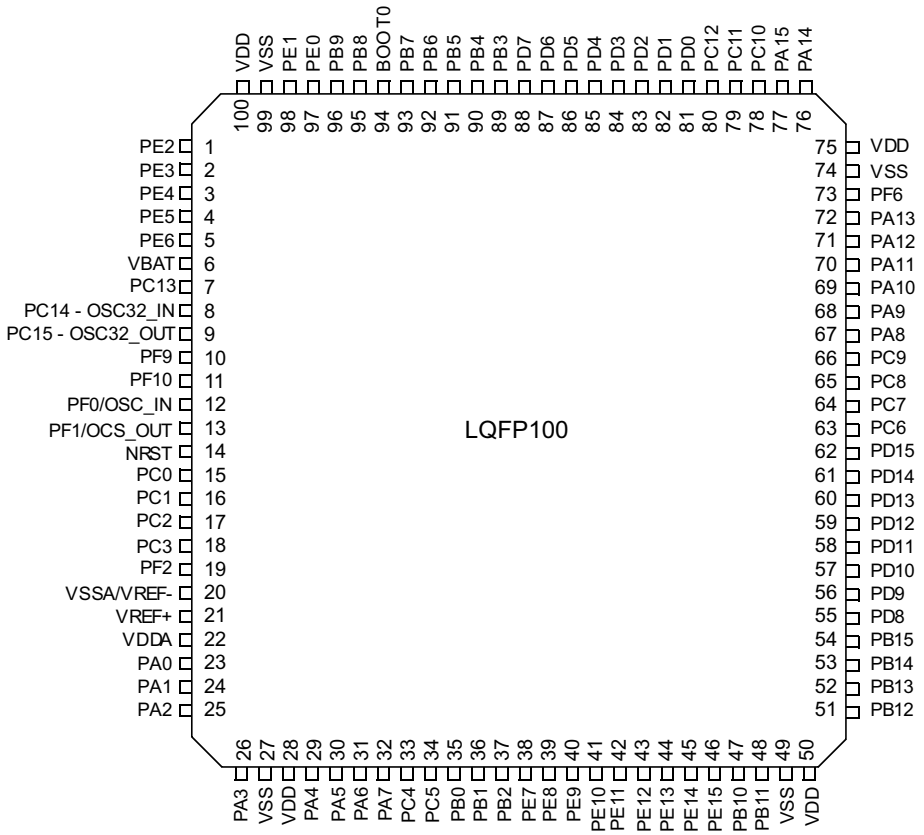

Figure 6. STM32F303xD/E LQFP144 pinout

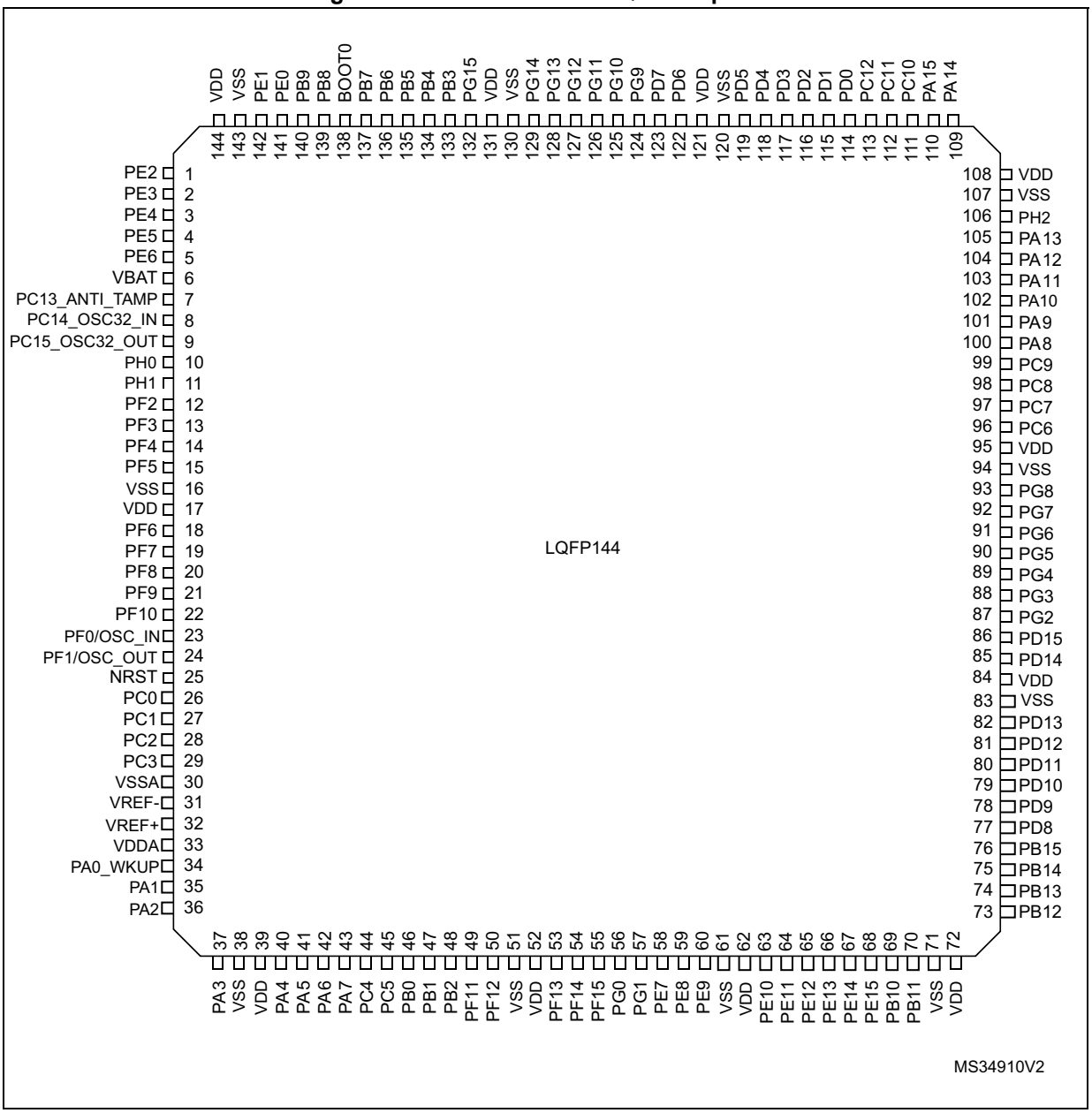

Figure 7. STM32F303xD/E WLCSP100 ballout

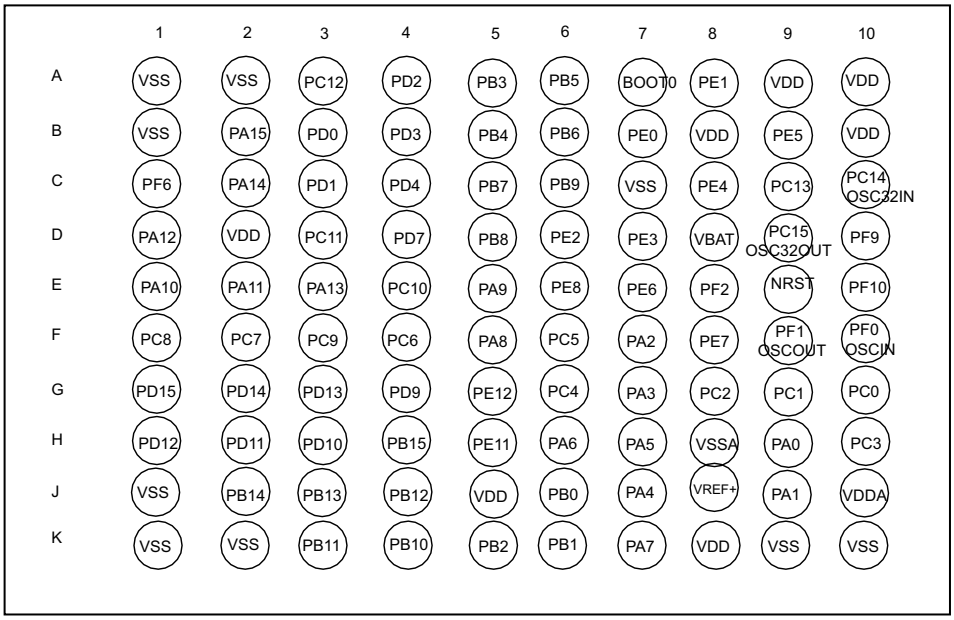

Figure 8. STM32F303xD/E UFBGA100 ballout

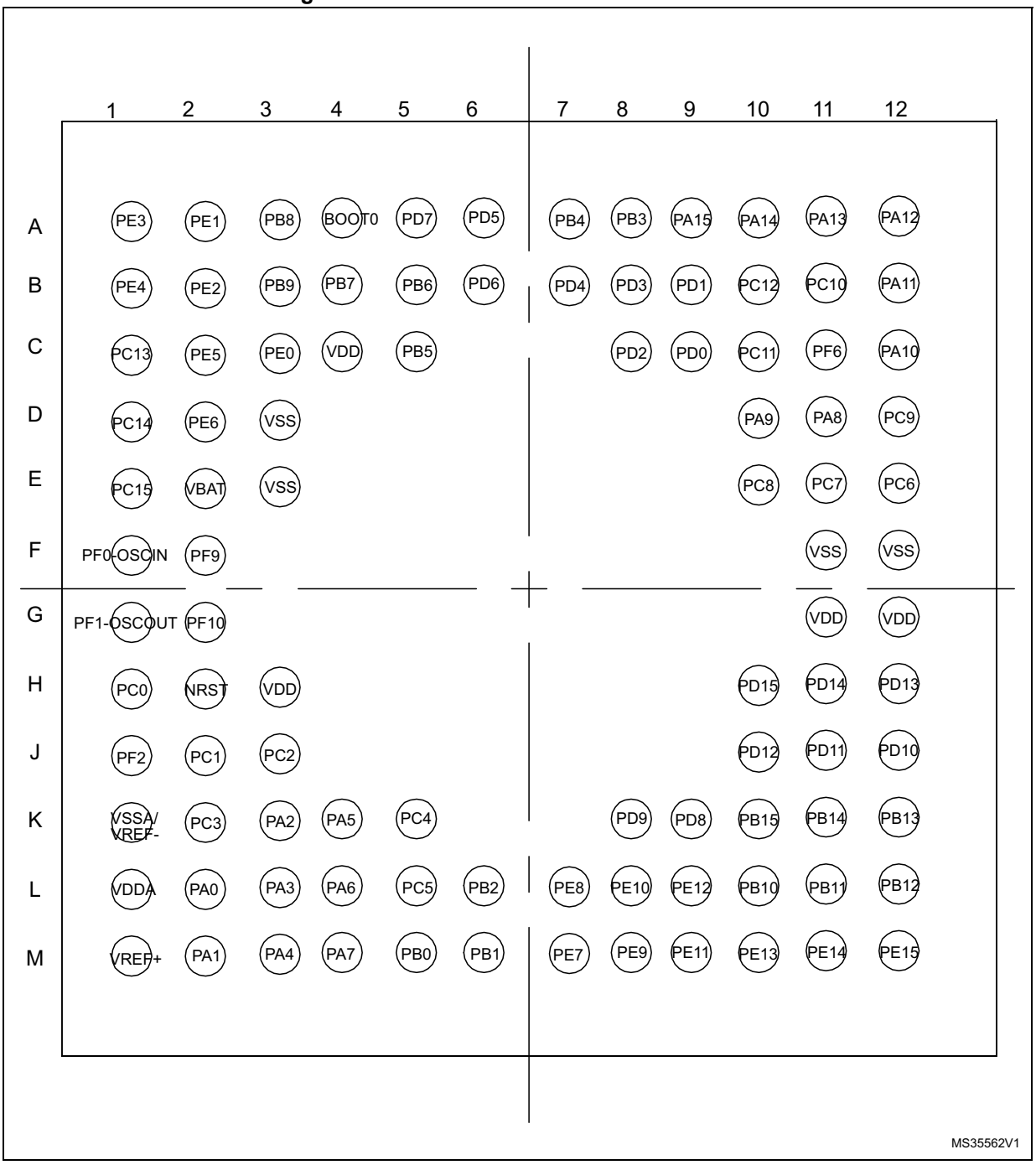

Table 12. Legend/abbreviations used in the pinout table

Name		Abbreviation	Definition
Pin name		Unless otherwise specified in brackets below the pin name, the pin function during and after reset is the same as the actual pin name	
I/O structure		FT	5 V tolerant I/O
		FTf	5 V tolerant I/O, I^2C FM+ option
		TTa	3.3 V tolerant I/O
		TC	Standard 3.3V I/O
		B	Dedicated to BOOT0 pin
		RST	Bi-directional reset pin with embedded weak pull-up resistor
Notes		Unless otherwise specified by a note, all I/Os are set as floating inputs during and after reset	
Pin functions	Alternate functions	Functions selected through GPIOx_AFR registers	
	Additional functions	Functions directly selected/enabled through peripheral registers	

Table 13. STM32F303xD/E pin definitions

Pin number					Pin name (function after reset)	Pin type	I/O structure	Notes	Alternate functions	Additional functions
LQFP64	LQFP100	UFBGA100	WLCSP100	LQFP144						
-	1	B2	D6	1	PE2	I/O	FT	(1)	TRACECK, EVENTOUT, TIM3_CH1, TSC_G7_IO1, SPI4_SCK, TIM20_CH1, FMC_A23	-
-	2	A1	D7	2	PE3	I/O	FT	(1)	TRACED0, EVENTOUT, TIM3_CH2, TSC_G7_IO2, SPI4_NSS, TIM20_CH2, FMC_A19	-
-	3	B1	C8	3	PE4	I/O	FT	(1)	TRACED1, EVENTOUT, TIM3_CH3, TSC_G7_IO3, SPI4_NSS, TIM20_CH1N, FMC_A20	-
-	4	C2	B9	4	PE5	I/O	FT	(1)	TRACED2, EVENTOUT, TIM3_CH4, TSC_G7_IO4, SPI4_MISO, TIM20_CH2N, FMC_A21	-
-	5	D2	E7	5	PE6	I/O	FT	(1)	TRACED3, EVENTOUT, SPI4_MOSI, TIM20_CH3N, FMC_A22	WKUP3, RTC_TAMP3
1	6	E2	D8	6	VBAT	S	-	-	-	-
2	7	C1	C9	7	PC13(2)	I/O	TC	-	EVENTOUT, TIM1_CH1N	WKUP2,RTC_TAMP1, RTC_TS, RTC_OUT
3	8	D1	C10	8	PC14 - OSC32_IN (2)	I/O	TC	-	EVENTOUT	OSC32_IN
4	9	E1	D9	9	PC15 - OSC32_OUT(2)	I/O	TC	-	EVENTOUT	OSC32_OUT
-	-	-	-	10	PH0	I/O	FT	(1)	EVENTOUT, TIM20_CH1, FMC_A0	-
-	-	-	-	11	PH1	I/O	FT	(1)	EVENTOUT, TIM20_CH2, FMC_A1	-
-	19	J1	E8	12	PF2	I/O	TTa	(1)	EVENTOUT, TIM20_CH3, FMC_A2	ADC12_IN10
-	-	-	-	13	PF3	I/O	FT	(1)	EVENTOUT, TIM20_CH4, FMC_A3	-

Table 13. STM32F303xD/E pin definitions (continued)

Pin number					Pin name (function after reset)	Pin type	I/O structure	Notes	Alternate functions	Additional functions
LQFP64	LQFP100	UFBGA100	WLCSP100	LQFP144						
-	-	-	-	14	PF4	I/O	TTa	(1)	EVENTOUT, COMP1_OUT, TIM20_CH1N, FMC_A4	ADC1_IN5(3)
-	-	-	-	15	PF5	I/O	FT	(1)	EVENTOUT, TIM20_CH2N, FMC_A5	-
-	-	-	-	16	VSS	S	-	(1)	-	-
-	-	-	-	17	VDD	S	-	(1)	-	-
-	73	C11	C1	18	PF6	I/O	FTf	(1)	EVENTOUT, TIM4_CH4, I2C2_SCL, USART3_RTS, FMC_NIORD	-
-	-	-	-	19	PF7	I/O	FT	(1)	EVENTOUT, TIM20_BKIN, FMC_NREG	-
-	-	-	-	20	PF8	I/O	FT	(1)	EVENTOUT, TIM20_BKIN2, FMC_NIOWR	-
-	10	F2	D10	21	PF9	I/O	FT	(1)	EVENTOUT, TIM20_BKIN, TIM15_CH1, SPI2_SCK, FMC_CD	-
-	11	G2	E10	22	PF10	I/O	FT	(1)	EVENTOUT, TIM20_BKIN2, TIM15_CH2, SPI2_SCK, FMC_INTR	-
5	12	F1	F10	23	PF0-OSC_IN	I	FTf	-	EVENTOUT, I2C2_SDA, SPI2_NSS/I2S2_WS, TIM1_CH3N	OSC_IN
6	13	G1	F9	24	PF1-OSC_OUT	O	FTf	-	EVENTOUT, I2C2_SCL, SPI2_SCK/I2S2_CK	OSC_OUT
7	14	H2	E9	25	NRST	I-O	RST	-	Device reset input/internal reset output (active low)	
8	15	H1	G10	26	PC0	I/O	TTa	-	EVENTOUT, TIM1_CH1	ADC12_IN6, COMP7_INM
9	16	J2	G9	27	PC1	I/O	TTa	-	EVENTOUT, TIM1_CH2	ADC12_IN7, COMP7_INP
10	17	J3	G8	28	PC2	I/O	TTa	-	EVENTOUT, TIM1_CH3, COMP7_OUT	ADC12_IN8

Table 13. STM32F303xD/E pin definitions (continued)

Pin number					Pin name (function after reset)	Pin type	I/O structure	Notes	Alternate functions	Additional functions
LQFP64	LQFP100	UFBGA100	WLCSP100	LQFP144						
11	18	K2	H10	29	PC3	I/O	TTa	-	EVENTOUT, TIM1_CH4, TIM1_BKIN2	ADC12_IN9
12	20	K1	H8	30	VSSA	S	-	(1)	-	-
-	-	-	-	31	VREF-	S	-	(1)	-	-
-	21	M1	J8	32	VREF+(4)	S	-	-	-	-
13	22	L1	J10	33	VDDA	S	-	-	-	-
14	23	L2	H9	34	PA0	I/O	TTa	-	TIM2_CH1/TIM2_ETR, TSC_G1_IO1, USART2_CTS, COMP1_OUT, TIM8_BKIN, TIM8_ETR, EVENTOUT	ADC1_IN1(3), COMP1_INM, RTC_TAMP2, WKUP1
15	24	M2	J9	35	PA1	I/O	TTa	-	RTC_REFIN, TIM2_CH2, TSC_G1_IO2, USART2_RTS, TIM15_CH1N, EVENTOUT	ADC1_IN2(3), COMP1_INP, OPAMP1_VINP, OPAMP3_VINP
16	25	K3	F7	36	PA2	I/O	TTa	(5)	TIM2_CH3, TSC_G1_IO3, USART2_TX, COMP2_OUT, TIM15_CH1, EVENTOUT	ADC1_IN3(3), COMP2_INM, OPAMP1_VOUT
17	26	L3	G7	37	PA3	I/O	TTa	-	TIM2_CH4, TSC_G1_IO4, USART2_RX, TIM15_CH2, EVENTOUT	ADC1_IN4(3), OPAMP1_VINM OPAMP,1_VINP
18	27	D3	K9, K10	38	VSS	S	-	-	-	-
19	28	H3	K8	39	VDD	S	-	(1)	-	-
20	29	M3	J7	40	PA4	I/O	TTa	(5)	TIM3_CH2, TSC_G2_IO1, SPI1_NSS, SPI3_NSS/I2S3_WS, USART2_CK, EVENTOUT	ADC2_IN1(3), DAC1_OUT1, COMP1_INM, COMP2_INM, COMP3_INM, COMP4_INM, COMP5_INM, COMP6_INM, COMP7_INM, OPAMP4_VINP

Table 13. STM32F303xD/E pin definitions (continued)

Pin number					Pin name (function after reset)	Pin type	I/O structure	Notes	Alternate functions	Additional functions
LQFP64	LQFP100	UFBGA100	WLCSP100	LQFP144						
21	30	K4	H7	41	PA5	I/O	TTa	(5)	TIM2_CH1/TIM2_ETR, TSC_G2_IO2, SPI1_SCK, EVENTOUT	ADC2_IN2(3), DAC1_OUT2, COMP1_INM, COMP2_INM, COMP3_INM, COMP4_INM, COMP5_INM, COMP6_INM, COMP7_INM, OPAMP1_VINP, OPAMP2_VINM, OPAMP3_VINP
22	31	L4	H6	42	PA6	I/O	TTa	(5)	TIM16_CH1, TIM3_CH1, TSC_G2_IO3, TIM8_BKIN, SPI1_MISO, TIM1_BKIN, COMP1_OUT, EVENTOUT	ADC2_IN3(3), OPAMP2_VOUT
23	32	M4	K7	43	PA7	I/O	TTa	-	TIM17_CH1, TIM3_CH2, TSC_G2_IO4, TIM8_CH1N, SPI1_MOSI, TIM1_CH1N, EVENTOUT	ADC2_IN4(3), COMP2_INP, OPAMP1_VINP, OPAMP2_VINP
24	33	K5	G6	44	PC4	I/O	TTa	-	EVENTOUT, TIM1_ETR, USART1_TX	ADC2_IN5(3)
25	34	L5	F6	45	PC5	I/O	TTa	-	EVENTOUT, TIM15_BKIN, TSC_G3_IO1, USART1_RX	ADC2_IN11, OPAMP1_VINM, OPAMP2_VINM
26	35	M5	J6	46	PB0	I/O	TTa	-	TIM3_CH3, TSC_G3_IO2, TIM8_CH2N, TIM1_CH2N, EVENTOUT	ADC3_IN12, COMP4_INP, OPAMP2_VINP, OPAMP3_VINP
27	36	M6	K6	47	PB1	I/O	TTa	(5)	TIM3_CH4, TSC_G3_IO3, TIM8_CH3N, TIM1_CH3N, COMP4_OUT, EVENTOUT	ADC3_IN1(3), OPAMP3_VOUT
28	37	L6	K5	48	PB2	I/O	TTa	-	TSC_G3_IO4, EVENTOUT	ADC2_IN12, COMP4_INM, OPAMP3_VINM

Table 13. STM32F303xD/E pin definitions (continued)

Pin number					Pin name (function after reset)	Pin type	I/O structure	Notes	Alternate functions	Additional functions
LQFP64	LQFP100	UFBGA100	WLCSP100	LQFP144						
-	-	-	-	49	PF11	I/O	FT	(1)	EVENTOUT, TIM20_ETR	-
-	-	-	-	50	PF12	I/O	FT	(1)	EVENTOUT, TIM20_CH1, FMC_A6	-
-	-	-	-	51	VSS	S	-	-	-	-
-	-	-	-	52	VDD	S	-	(1)	-	-
-	-	-	-	53	PF13	I/O	FT	(1)	EVENTOUT, TIM20_CH2, FMC_A7	-
-	-	-	-	54	PF14	I/O	FT	(1)	EVENTOUT, TIM20_CH3, FMC_A8	-
-	-	-	-	55	PF15	I/O	FT	(1)	EVENTOUT, TIM20_CH4, FMC_A9	-
-	-	-	-	56	PG0	I/O	FT	(1)	EVENTOUT, TIM20_CH1N, FMC_A10	-
-	-	-	-	57	PG1	I/O	FT	(1)	EVENTOUT, TIM20_CH2N, FMC_A11	-
-	38	M7	F8	58	PE7	I/O	TTa	(1)	EVENTOUT, TIM1_ETR, FMC_D4	ADC3_IN13
-	39	L7	E6	59	PE8	I/O	TTa	(1)	EVENTOUT, TIM1_CH1N, FMC_D5	ADC34_IN6, COMP4_INM
-	40	M8	-	60	PE9	I/O	TTa	(1)	EVENTOUT, TIM1_CH1, FMC_D6	ADC3_IN2(3)
-	-	-	-	61	VSS	S	-	(1)	-	-
-	-	-	-	62	VDD	S	-	(1)	-	-
-	41	L8	-	63	PE10	I/O	TTa	(1)	EVENTOUT, TIM1_CH2N, FMC_D7	ADC3_IN14
-	42	M9	H5	64	PE11	I/O	TTa	(1)	EVENTOUT, TIM1_CH2, SPI4_NSS, FMC_D8	ADC3_IN15
-	43	L9	G5	65	PE12	I/O	TTa	(1)	EVENTOUT, TIM1_CH3N, SPI4_SCK, FMC_D9	ADC3_IN16
-	44	M10	-	66	PE13	I/O	TTa	(1)	EVENTOUT, TIM1_CH3, SPI4_MISO, FMC_D10	ADC3_IN3(3)

Table 13. STM32F303xD/E pin definitions (continued)

Pin number					Pin name (function after reset)	Pin type	I/O structure	Notes	Alternate functions	Additional functions
LQFP64	LQFP100	UFBGA100	WLCSP100	LQFP144						
-	45	M11	-	67	PE14	I/O	TTa	(1)	EVENTOUT, TIM1_CH4, SPI4_MOSI, TIM1_BKIN2, FMC_D11	ADC4_IN1(3)
-	46	M12	-	68	PE15	I/O	TTa	(1)	EVENTOUT, TIM1_BKIN, USART3_RX, FMC_D12	ADC4_IN2(3)
29	47	L10	K4	69	PB10	I/O	TTa	-	TIM2_CH3, TSC_SYNC, USART3_TX, EVENTOUT	COMP5_INM, OPAMP3_VINM, OPAMP4_VINM
30	48	L11	K3	70	PB11	I/O	TTa	-	TIM2_CH4, TSC_G6_IO1, USART3_RX, EVENTOUT	ADC12_IN14, COMP6_INP, OPAMP4_VINP
31	49	F12	K1, J1, K2	71	VSS	S	-	-	-	-
32	50	G12	J5	72	VDD	S	-	-	-	-
33	51	L12	J4	73	PB12	I/O	TTa	(5)	TSC_G6_IO2, I2C2_SMBAL, SPI2_NSS/I2S2_WS, TIM1_BKIN, USART3_CK, EVENTOUT	ADC4_IN3(3), COMP3_INM, OPAMP4_VOUT
34	52	K12	J3	74	PB13	I/O	TTa	-	TSC_G6_IO3, SPI2_SCK/I2S2_CK, TIM1_CH1N, USART3_CTS, EVENTOUT	ADC3_IN5(3), COMP5_INP, OPAMP3_VINP, OPAMP4_VINP
35	53	K11	J2	75	PB14	I/O	TTa	-	TIM15_CH1, TSC_G6_IO4, SPI2_MISO/I2S2ext_SD, TIM1_CH2N, USART3_RTS, EVENTOUT	ADC4_IN4(3), COMP3_INP, OPAMP2_VINP
36	54	K10	H4	76	PB15	I/O	TTa	-	RTC_REFIN, TIM15_CH2, TIM15_CH1N, TIM1_CH3N, SPI2_MOSI/I2S2_SD, EVENTOUT	ADC4_IN5(3), COMP6_INM
-	55	K9	-	77	PD8	I/O	TTa	(1)	EVENTOUT, USART3_TX, FMC_D13	ADC4_IN12, OPAMP4_VINM

Table 13. STM32F303xD/E pin definitions (continued)

Pin number					Pin name (function after reset)	Pin type	I/O structure	Notes	Alternate functions	Additional functions
LQFP64	LQFP100	UFBGA100	WLCSP100	LQFP144						
-	56	K8	G4	78	PD9	I/O	TTa	(1)	EVENTOUT, USART3_RX, FMC_D14	ADC4_IN13
-	57	J12	H3	79	PD10	I/O	TTa	(1)	EVENTOUT, USART3_CK, FMC_D15	ADC34_IN7, COMP6_INM
-	58	J11	H2	80	PD11	I/O	TTa	(1)	EVENTOUT, USART3_CTS, FMC_A16	ADC34_IN8, OPAMP4_VINP
-	59	J10	H1	81	PD12	I/O	TTa	(1)	EVENTOUT, TIM4_CH1, TSC_G8_IO1, USART3_RTS, FMC_A17	ADC34_IN9
-	60	H12	G3	82	PD13	I/O	TTa	(1)	EVENTOUT, TIM4_CH2, TSC_G8_IO2, FMC_A18	ADC34_IN10, COMP5_INM
-	-	-	-	83	VSS	S	-	(1)	-	-
-	-	-	-	84	VDD	S	-	(1)	-	-
-	61	H11	G2	85	PD14	I/O	TTa	(1)	EVENTOUT, TIM4_CH3, TSC_G8_IO3, FMC_D0	ADC34_IN11, OPAMP2_VINP
-	62	H10	G1	86	PD15	I/O	TTa	(1)	EVENTOUT, TIM4_CH4, TSC_G8_IO4, SPI2_NSS, FMC_D1	COMP3_INM
-	-	-	-	87	PG2	I/O	FT	(1)	EVENTOUT, TIM20_CH3N, FMC_A12	-
-	-	-	-	88	PG3	I/O	FT	(1)	EVENTOUT, TIM20_BKIN, FMC_A13	-
-	-	-	-	89	PG4	I/O	FT	(1)	EVENTOUT, TIM20_BKIN2, FMC_A14	-
-	-	-	-	90	PG5	I/O	FT	(1)	EVENTOUT, TIM20_ETR, FMC_A15	-
-	-	-	-	91	PG6	I/O	FT	(1)	EVENTOUT, FMC_INT2	-
-	-	-	-	92	PG7	I/O	FT	(1)	EVENTOUT, FMC_INT3	-
-	-	-	-	93	PG8	I/O	FT	(1)	EVENTOUT	-
-	-	-	-	94	VSS	S	-	(1)	-	-
-	-	-	-	95	VDD	S	-	(1)	-	-

Table 13. STM32F303xD/E pin definitions (continued)

Pin number					Pin name (function after reset)	Pin type	I/O structure	Notes	Alternate functions	Additional functions
LQFP64	LQFP100	UFBGA100	WLCSP100	LQFP144						
37	63	E12	F4	96	PC6	I/O	FT	-	EVENTOUT, TIM3_CH1, TIM8_CH1, I2S2_MCK, COMP6_OUT	-
38	64	E11	F2	97	PC7	I/O	FT	-	EVENTOUT, TIM3_CH2, TIM8_CH2, I2S3_MCK, COMP5_OUT	-
39	65	E10	F1	98	PC8	I/O	FT	-	EVENTOUT, TIM3_CH3, TIM8_CH3, COMP3_OUT	-
40	66	D12	F3	99	PC9	I/O	FTf	-	EVENTOUT, TIM3_CH4, I2C3_SDA, TIM8_CH4, I2SCKIN, TIM8_BKIN2	-
41	67	D11	F5	100	PA8	I/O	FTf	-	MCO, I2C3_SCL, I2C2_SMBAL, I2S2_MCK, TIM1_CH1, USART1_CK, COMP3_OUT, TIM4_ETR, EVENTOUT	-
42	68	D10	E5	101	PA9	I/O	FTf	-	I2C3_SMBAL, TSC_G4_IO1, I2C2_SCL, I2S3_MCK, TIM1_CH2, USART1_TX, COMP5_OUT, TIM15_BKIN, TIM2_CH3, EVENTOUT	-
43	69	C12	E1	102	PA10	I/O	FTf	-	TIM17_BKIN, TSC_G4_IO2, I2C2_SDA, SPI2_MISO/I2S2ext_SD, TIM1_CH3, USART1_RX, COMP6_OUT, TIM2_CH4, TIM8_BKIN, EVENTOUT	-
44	70	B12	E2	103	PA11	I/O	FT	-	SPI2_MOSI/I2S2_SD, TIM1_CH1N, USART1_CTS, COMP1_OUT, CAN_RX, TIM4_CH1, TIM1_CH4, TIM1_BKIN2, EVENTOUT	USB_DM

Table 13. STM32F303xD/E pin definitions (continued)

Pin number					Pin name (function after reset)	Pin type	I/O structure	Notes	Alternate functions	Additional functions
LQFP64	LQFP100	UFBGA100	WLCSP100	LQFP144						
45	71	A12	D1	104	PA12	I/O	FT	-	TIM16_CH1, I2SCKIN, TIM1_CH2N, USART1_RTS, COMP2_OUT, CAN_TX, TIM4_CH2, TIM1_ETR, EVENTOUT	USB_DP
46	72	A11	E3	105	PA13	I/O	FT	-	SWDIO-JTMS, TIM16_CH1N, TSC_G4_IO3, IR-OUT, USART3_CTS, TIM4_CH3, EVENTOUT	-
-	-	-	-	106	PH2	I/O	FT	(1)	EVENTOUT	-
47	74	F11	A1, A2, B1	107	VSS	S	-	-	-	-
48	75	G11	D2	108	VDD	S	-	-	-	-
49	76	A10	C2	109	PA14	I/O	FTf	-	SWCLK-JTCK, TSC_G4_IO4, I2C1_SDA, TIM8_CH2, TIM1_BKIN, USART2_TX, EVENTOUT	-
50	77	A9	B2	110	PA15	I/O	FTf	-	JTDI, TIM2_CH1/TIM2_ETR, TIM8_CH1, TSC_SYNC, I2C1_SCL, SPI1_NSS, SPI3_NSS/I2S3_WS, USART2_RX, TIM1_BKIN, EVENTOUT	-
51	78	B11	E4	111	PC10	I/O	FT	-	EVENTOUT, TIM8_CH1N, UART4_TX, SPI3_SCK/I2S3_CK, USART3_TX	-
52	79	C10	D3	112	PC11	I/O	FT	-	EVENTOUT, TIM8_CH2N, UART4_RX, SPI3_MISO/I2S3ext_SD, USART3_RX	-

Table 13. STM32F303xD/E pin definitions (continued)

Pin number					Pin name (function after reset)	Pin type	I/O structure	Notes	Alternate functions	Additional functions
LQFP64	LQFP100	UFBGA100	WLCSP100	LQFP144						
53	80	B10	A3	113	PC12	I/O	FT	-	EVENTOUT, TIM8_CH3N, UART5_TX, SPI3_MOSI/I2S3_SD, USART3_CK	-
-	81	C9	B3	114	PD0	I/O	FT	(1)	EVENTOUT, CAN_RX, FMC_D2	-
-	82	B9	C3	115	PD1	I/O	FT	(1)	EVENTOUT, TIM8_CH4, TIM8_BKIN2, CAN_TX, FMC_D3	-
54	83	C8	A4	116	PD2	I/O	FT	-	EVENTOUT, TIM3_ETR, TIM8_BKIN, UART5_RX	-
-	84	B8	B4	117	PD3	I/O	FT	(1)	EVENTOUT, TIM2_CH1/TIM2_ETR, USART2_CTS, FMC_CLK	-
-	85	B7	C4	118	PD4	I/O	FT	(1)	EVENTOUT, TIM2_CH2, USART2_RTS, FMC_NOE	-
-	86	A6	-	119	PD5	I/O	FT	(1)	EVENTOUT, USART2_TX, FMC_NWE	-
-	-	-	-	120	VSS	S	-	(1)	-	-
-	-	-	-	121	VDD	S	-	(1)	-	-
-	87	B6	-	122	PD6	I/O	FT	(1)	EVENTOUT, TIM2_CH4, USART2_RX, FMC_NWAIT	-
-	88	A5	D4	123	PD7	I/O	FT	(1)	EVENTOUT, TIM2_CH3, USART2_CK, FMC_NE1/FMC_NCE2	-
-	-	-	-	124	PG9	I/O	FT	(1)	EVENTOUT, FMC_NE2/FMC_NCE3	-
-	-	-	-	125	PG10	I/O	FT	(1)	EVENTOUT, FMC_NCE4_1/FMC_NE3	-
-	-	-	-	126	PG11	I/O	FT	(1)	EVENTOUT, FMC_NCE4_2	-
-	-	-	-	127	PG12	I/O	FT	(1)	EVENTOUT, FMC_NE4	-
-	-	-	-	128	PG13	I/O	FT	(1)	EVENTOUT, FMC_A24	-

Table 13. STM32F303xD/E pin definitions (continued)

Pin number					Pin name (function after reset)	Pin type	I/O structure	Notes	Alternate functions	Additional functions
LQFP64	LQFP100	UFBGA100	WLCSP100	LQFP144						
-	-	-	-	129	PG14	I/O	FT	(1)	EVENTOUT, FMC_A25	-
-	-	-	-	130	VSS	S	-	(1)	-	-
-	-	-	-	131	VDD	S	-	(1)	-	-
-	-	-	-	132	PG15	I/O	FT	(1)	EVENTOUT	-
55	89	A8	A5	133	PB3	I/O	FT	-	JTDO-TRACESWO, TIM2_CH2, TIM4_ETR, TSC_G5_IO1, TIM8_CH1N, SPI1_SCK, SPI3_SCK/I2S3_CK, USART2_TX, TIM3_ETR, EVENTOUT	-
56	90	A7	B5	134	PB4	I/O	FT	-	JTRST, TIM16_CH1, TIM3_CH1, TSC_G5_IO2, TIM8_CH2N, SPI1_MISO, SPI3_MISO/I2S3ext_SD, USART2_RX, TIM17_BKIN, EVENTOUT	-
57	91	C5	A6	135	PB5	I/O	FTf	-	TIM16_BKIN, TIM3_CH2, TIM8_CH3N, I2C1_SMBAI, SPI1_MOSI, SPI3_MOSI/I2S3_SD, USART2_CK, I2C3_SDA, TIM17_CH1, EVENTOUT	-
58	92	B5	B6	136	PB6	I/O	FTf	-	TIM16_CH1N, TIM4_CH1, TSC_G5_IO3, I2C1_SCL, TIM8_CH1, TIM8_ETR, USART1_TX, TIM8_BKIN2, EVENTOUT	-
59	93	B4	C5	137	PB7	I/O	FTf	-	TIM17_CH1N, TIM4_CH2, TSC_G5_IO4, I2C1_SDA, TIM8_BKIN, USART1_RX, TIM3_CH4, FMC_NADV, EVENTOUT	-
60	94	A4	A7	138	BOOT0	I	-	-	-	-

Table 13. STM32F303xD/E pin definitions (continued)

Pin number					Pin name (function after reset)	Pin type	I/O structure	Notes	Alternate functions	Additional functions
LQFP64	LQFP100	UFBGA100	WLCSP100	LQFP144						
61	95	A3	D5	139	PB8	I/O	FTf	-	TIM16_CH1, TIM4_CH3, TSC_SYNC, I2C1_SCL, USART3_RX, COMP1_OUT, CAN_RX, TIM8_CH2, TIM1_BKIN, EVENTOUT	-
62	96	B3	C6	140	PB9	I/O	FTf	-	TIM17_CH1, TIM4_CH4, I2C1_SDA, IR-OUT, USART3_TX, COMP2_OUT, CAN_TX, TIM8_CH3, EVENTOUT	-
-	97	C3	B7	141	PE0	I/O	FT	(1)	EVENTOUT, TIM4_ETR, TIM16_CH1, TIM20_ETR, USART1_TX, FMC_NBL0	-
-	98	A2	A8	142	PE1	I/O	FT	(1)	EVENTOUT, TIM17_CH1, TIM20_CH4, USART1_RX, FMC_NBL1	-
63	99	E3	C7	143	VSS	S	-	-	-	-
64	100	C4	A9, A10, B10, B8	144	VDD	S	-	-	-	-

1. Function availability depends on the chosen device.
2. PC13, PC14 and PC15 are supplied through the power switch. Since the switch sinks only a limited amount of current (3 mA), the use of GPIO PC13 to PC15 in output mode is limited:
   - The speed should not exceed 2 MHz with a maximum load of 30 pF
   - These GPIOs must not be used as current sources (e.g. to drive an LED)

   After the first backup domain power-up, PC13, PC14 and PC15 operate as GPIOs. Their function then depends on the content of the Backup registers which is not reset by the main reset. For details on how to manage these GPIOs, refer to the Battery backup domain and BKP register description sections in the RM0316 reference manual.
3. Fast ADC channel.
4. The VREF+ functionality is not available on the 64-pin package. In this package, the VREF+ is internally connected to VDDA.
5. These GPIOs offer a reduced touch sensing sensitivity. It is thus recommended to use them as sampling capacitor I/O.

Table 14. STM32F303xD/E alternate function mapping

Port		AF0	AF1	AF2	AF3	AF4	AF5	AF6	AF7	AF8	AF9	AF10	AF11	AF12	AF13	AF14	AF15
		SYS_AF	TIM2/15/16/17/EVENT	I2C3/TIM1/2/3/4/8/20/15/GPCOMP1	I2C3/TIM8/20/15/GPCOMP7/TSC	I2C1/2/TIM1/8/16/17	SPI1/SPI2/I2S2/SPI3/I2S3/SPI4/UART4/5/TIM8/Infrared	SPI2/I2S2/SPI3/I2S3/TIM1/8/20/Infrared	USART1/2/3/CAN/GPCOMP3/5/6	I2C3/GPCOMP1/2/3/4/5/6	CAN/TIM1/8/15	TIM2/3/4/8/17	TIM1/8	FSMC/TIM1	-	-	EVENT
Port A	PA0	-	TIM2_CH1/TIM2_ETR	-	TSC_G1_IO1	-	-	-	USART2_CTS	COMP1_OUT	TIM8_BKIN	TIM8_ETR	-	-	-	-	EVENT OUT
	PA1	RTC_REFIN	TIM2_CH2	-	TSC_G1_IO2	-	-	-	USART2_RTS	-	TIM15_CH1N	-	-	-	-	-	EVENT OUT
	PA2	-	TIM2_CH3	-	TSC_G1_IO3	-	-	-	USART2_TX	COMP2_OUT	TIM15_CH1	-	-	-	-	-	EVENT OUT
	PA3	-	TIM2_CH4	-	TSC_G1_IO4	-	-	-	USART2_RX	-	TIM15_CH2	-	-	-	-	-	EVENT OUT
	PA4	-		TIM3_CH2	TSC_G2_IO1	-	SPI1_NSS	SPI3_NSS/I2S3_WS	USART2_CK	-	-	-	-	-	-	-	EVENT OUT
	PA5	-	TIM2_CH1/TIM2_ETR	-	TSC_G2_IO2	-	SPI1_SCK	-	-	-	-	-	-	-	-	-	EVENT OUT
	PA6	-	TIM16_CH1	TIM3_CH1	TSC_G2_IO3	TIM8_BKIN	SPI1_MISO	TIM1_BKIN	-	COMP1_OUT	-	-	-	-	-	-	EVENT OUT
	PA7	-	TIM17_CH1	TIM3_CH2	TSC_G2_IO4	TIM8_CH1N	SPI1_MOSI	TIM1_CH1N	-	-	-	-	-	-	-	-	EVENT OUT
	PA8	MCO	-	-	I2C3_SCL	I2C2_SMBAL	I2S2_MCK	TIM1_CH1	USART1_CK	COMP3_OUT	-	TIM4_ETR	-	-	-	-	EVENT OUT
	PA9	-	-	I2C3_SMBAL	TSC_G4_IO1	I2C2_SCL	I2S3_MCK	TIM1_CH2	USART1_TX	COMP5_OUT	TIM15_BKIN	TIM2_CH3	-	-	-	-	EVENT OUT

Table 14. STM32F303xD/E alternate function mapping (continued)

Port		AF0	AF1	AF2	AF3	AF4	AF5	AF6	AF7	AF8	AF9	AF10	AF11	AF12	AF13	AF14	AF15
		SYS_AF	**TIM2/15/16/17/EVENT**	**I2C3/TIM1/2/3/4/8/20/15/GPCOMP1**	**I2C3/TIM8/20/15/GPCOMP7/TSC**	**I2C1/2/TIM1/8/16/17**	**SPI1/SPI2/I2S2/SPI3/I2S3/SPI4/UART4/5/TIM8/Infrared**	**SPI2/I2S2/SPI3/I2S3/TIM1/8/20/Infrared**	**USART1/2/3/CAN/GPCOMP3/5/6**	**I2C3/GPCOMP1/2/3/4/5/6**	**CAN/TIM1/8/15**	**TIM2/3/4/8/17**	**TIM1/8**	**FSMC/TIM1**	**-**	**-**	**EVENT**
Port A	PA10	-	TIM17_BKIN	-	TSC_G4_IO2	I2C2_SDA	SPI2_MISO/I2S2ext_SD	TIM1_CH3	USART1_RX	COMP6_OUT	-	TIM2_CH4	TIM8_BKIN	-	-	-	EVENT OUT
	PA11	-	-	-	-	-	SPI2_MOSI/I2S2_SD	TIM1_CH1N	USART1_CTS	COMP1_OUT	CAN_RX	TIM4_CH1	TIM1_CH4	TIM1_BKIN2	-	-	EVENT OUT
	PA12	-	TIM16_CH1	-	-	-	I2SCKIN	TIM1_CH2N	USART1_RTS	COMP2_OUT	CAN_TX	TIM4_CH2	TIM1_ETR	-	-	-	EVENT OUT
	PA13	SWDIO-JTMS	TIM16_CH1N	-	TSC_G4_IO3	-	IR-OUT	-	USART3_CTS	-	-	TIM4_CH3	-	-	-	-	EVENT OUT
	PA14	SWCLK-JTCK	-	-	TSC_G4_IO4	I2C1_SDA	TIM8_CH2	TIM1_BKIN	USART2_TX	-	-	-	-	-	-	-	EVENT OUT
	PA15	JTDI	TIM2_CH1/TIM2_ETR	TIM8_CH1	TSC_SYNC	I2C1_SCL	SPI1_NSS	SPI3_NSS/I2S3_WS	USART2_RX	-	TIM1_BKIN	-	-	-	-	-	EVENT OUT
Port B	PB0	-	-	TIM3_CH3	TSC_G3_IO2	TIM8_CH2N	-	TIM1_CH2N	-	-	-	-	-	-	-	-	EVENT OUT
	PB1	-	-	TIM3_CH4	TSC_G3_IO3	TIM8_CH3N	-	TIM1_CH3N	-	COMP4_OUT	-	-	-	-	-	-	EVENT OUT
	PB2	-	-	-	TSC_G3_IO4	-	-	-	-	-	-	-	-	-	-	-	EVENT OUT
	PB3	JTDO-TRACESWO	TIM2_CH2	TIM4_ETR	TSC_G5_IO1	TIM8_CH1N	SPI1_SCK	SPI3_SCK/I2S3_CK	USART2_TX	-	-	TIM3_ETR	-	-	-	-	EVENT OUT

Table 14. STM32F303xD/E alternate function mapping (continued)

Port		AF0	AF1	AF2	AF3	AF4	AF5	AF6	AF7	AF8	AF9	AF10	AF11	AF12	AF13	AF14	AF15
		SYS_AF	TIM2/15/16/17/EVENT	I2C3/TIM1/2/3/4/8/20/15/GPCOMP1	I2C3/TIM8/20/15/GPCOMP7/TSC	I2C1/2/TIM1/8/16/17	SPI1/SPI2/I2S2/SPI3/I2S3/SPI4/UART4/5/TIM8/Infrared	SPI2/I2S2/SPI3/I2S3/TIM1/8/20/Infrared	USART1/2/3/CAN/GPCOMP3/5/6	I2C3/GPCOMP1/2/3/4/5/6	CAN/TIM1/8/15	TIM2/3/4/8/17	TIM1/8	FSMC/TIM1	-	-	EVENT
Port B	PB4	JTRST	TIM16_CH1	TIM3_CH1	TSC_G5_IO2	TIM8_CH2N	SPI1_MISO	SPI3_MISO/I2S3ext_SD	USART2_RX	-	-	TIM17_BKIN	-	-	-	-	EVENT OUT
	PB5	-	TIM16_BKIN	TIM3_CH2	TIM8_CH3N	I2C1_SMBAI	SPI1_MOSI	SPI3_MOSI/I2S3_SD	USART2_CK	I2C3_SDA	-	TIM17_CH1	-	-	-	-	EVENT OUT
	PB6	-	TIM16_CH1N	TIM4_CH1	TSC_G5_IO3	I2C1_SCL	TIM8_CH1	TIM8_ETR	USART1_TX	-	-	TIM8_BKIN2	-	-	-	-	EVENT OUT
	PB7	-	TIM17_CH1N	TIM4_CH2	TSC_G5_IO4	I2C1_SDA	TIM8_BKIN	-	USART1_RX	-	-	TIM3_CH4	-	FMC_NADV	-	-	EVENT OUT
	PB8	-	TIM16_CH1	TIM4_CH3	TSC_SYNC	I2C1_SCL	-	-	USART3_RX	COMP1_OUT	CAN_RX	TIM8_CH2	-	TIM1_BKIN	-	-	EVENT OUT
	PB9	-	TIM17_CH1	TIM4_CH4	-	I2C1_SDA	-	IR-OUT	USART3_TX	COMP2_OUT	CAN_TX	TIM8_CH3	-	-	-	-	EVENT OUT
	PB10	-	TIM2_CH3	-	TSC_SYNC	-	-	-	USART3_TX	-	-	-	-	-	-	-	EVENT OUT
	PB11	-	TIM2_CH4	-	TSC_G6_IO1	-	-	-	USART3_RX	-	-	-	-	-	-	-	EVENT OUT
	PB12	-	-	-	TSC_G6_IO2	I2C2_SMBAL	SPI2_NSS/I2S2_WS	TIM1_BKIN	USART3_CK	-	-	-	-	-	-	-	EVENT OUT
	PB13	-	-	-	TSC_G6_IO3	-	SPI2_SCK/I2S2_CK	TIM1_CH1N	USART3_CTS	-	-	-	-	-	-	-	EVENT OUT

Table 14. STM32F303xD/E alternate function mapping (continued)

Port		AF0	AF1	AF2	AF3	AF4	AF5	AF6	AF7	AF8	AF9	AF10	AF11	AF12	AF13	AF14	AF15
		SYS_AF	TIM2/15/16/17/EVENT	I2C3/TIM1/2/3/4/8/20/15/GPCOMP1	I2C3/TIM8/20/15/GPCOMP7/TSC	I2C1/2/TIM1/8/16/17	SPI1/SPI2/I2S2/SPI3/I2S3/SPI4/UART4/5/TIM8/Infrared	SPI2/I2S2/SPI3/I2S3/TIM1/8/20/Infrared	USART1/2/3/CAN/GPCOMP3/5/6	I2C3/GPCOMP1/2/3/4/5/6	CAN/TIM1/8/15	TIM2/3/4/8/17	TIM1/8	FSMC/TIM1	-	-	EVENT
Port B	PB14	-	TIM15_CH1	-	TSC_G6_IO4	-	SPI2_MISO/I2S2ext_SD	TIM1_CH2N	USART3_RTS	-	-	-	-	-	-	-	EVENT OUT
Port B	PB15	RTC_REFIN	TIM15_CH2	TIM15_CH1N	-	TIM1_CH3N	SPI2_MOSI/I2S2_SD	-	-	-	-	-	-	-	-	-	EVENT OUT
Port C	PC0	-	EVENT OUT	TIM1_CH1	-	-	-	-	-	-	-	-	-	-	-	-	-
Port C	PC1	-	EVENT OUT	TIM1_CH2	-	-	-	-	-	-	-	-	-	-	-	-	-
Port C	PC2	-	EVENT OUT	TIM1_CH3	COMP7_OUT	-	-	-	-	-	-	-	-	-	-	-	-
Port C	PC3	-	EVENT OUT	TIM1_CH4	-	-	-	TIM1_BKIN2	-	-	-	-	-	-	-	-	-
Port C	PC4	-	EVENT OUT	TIM1_ETR	-	-	-	-	USART1_TX	-	-	-	-	-	-	-	-
Port C	PC5	-	EVENT OUT	TIM15_BKIN	TSC_G3_IO1	-	-	-	USART1_RX	-	-	-	-	-	-	-	-
Port C	PC6	-	EVENT OUT	TIM3_CH1	-	TIM8_CH1	-	I2S2_MCK	COMP6_OUT	-	-	-	-	-	-	-	-
Port C	PC7	-	EVENT OUT	TIM3_CH2	-	TIM8_CH2	-	I2S3_MCK	COMP5_OUT	-	-	-	-	-	-	-	-
Port C	PC8	-	EVENT OUT	TIM3_CH3	-	TIM8_CH3	-	-	COMP3_OUT	-	-	-	-	-	-	-	-
Port C	PC9	-	EVENT OUT	TIM3_CH4	I2C3_SDA	TIM8_CH4	I2SCKIN	TIM8_BKIN2	-	-	-	-	-	-	-	-	-

Table 14. STM32F303xD/E alternate function mapping (continued)

Port		AF0	AF1	AF2	AF3	AF4	AF5	AF6	AF7	AF8	AF9	AF10	AF11	AF12	AF13	AF14	AF15
		SYS_AF	TIM2/15/16/17/EVENT	I2C3/TIM1/2/3/4/8/20/15/GPCOMP1	I2C3/TIM8/20/15/GPCOMP7/TSC	I2C1/2/TIM1/8/16/17	SPI1/SPI2/I2S2/SPI3/I2S3/SPI4/UART4/5/TIM8/Infrared	SPI2/I2S2/SPI3/I2S3/TIM1/8/20/Infrared	USART1/2/3/CAN/GPCOMP3/5/6	I2C3/GPCOMP1/2/3/4/5/6	CAN/TIM1/8/15	TIM2/3/4/8/17	TIM1/8	FSMC/TIM1	-	-	EVENT
Port C	PC10	-	EVENT OUT	-	-	TIM8_CH1N	UART4_TX	SPI3_SCK/I2S3_CK	USART3_TX	-	-	-	-	-	-	-	-
	PC11	-	EVENT OUT	-	-	TIM8_CH2N	UART4_RX	SPI3_MISO/I2S3ext_SD	USART3_RX	-	-	-	-	-	-	-	-
	PC12	-	EVENT OUT	-	-	TIM8_CH3N	UART5_TX	SPI3_MOSI/I2S3_SD	USART3_CK	-	-	-	-	-	-	-	-
	PC13	-	EVENT OUT	-	-	TIM1_CH1N	-	-	-	-	-	-	-	-	-	-	-
	PC14	-	EVENT OUT	-	-	-	-	-	-	-	-	-	-	-	-	-	-
	PC15	-	EVENT OUT	-	-	-	-	-	-	-	-	-	-	-	-	-	-
Port D	PD0	-	EVENT OUT	-	-	-	-	-	CAN_RX	-	-	-	-	FMC_D2	-	-	-
	PD1	-	EVENT OUT	-	-	TIM8_CH4		TIM8_BKIN2	CAN_TX	-	-	-	-	FMC_D3	-	-	-
	PD2	-	EVENT OUT	TIM3_ETR	-	TIM8_BKIN	UART5_RX	-	-	-	-	-	-	-	-	-	-
	PD3	-	EVENT OUT	TIM2_CH1/TIM2_ETR	-	-	-	-	USART2_CTS	-	-	-	-	FMC_CLK	-	-	-
	PD4	-	EVENT OUT	TIM2_CH2	-	-	-	-	USART2_RTS	-	-	-	-	FMC_NOE	-	-	-

Table 14. STM32F303xD/E alternate function mapping (continued)

Port		AF0	AF1	AF2	AF3	AF4	AF5	AF6	AF7	AF8	AF9	AF10	AF11	AF12	AF13	AF14	AF15
		SYS_AF	TIM2/15/16/17/EVENT	I2C3/TIM1/2/3/4/8/20/15/GPCOMP1	I2C3/TIM8/20/15/GPCOMP7/TSC	I2C1/2/TIM1/8/16/17	SPI1/SPI2/I2S2/SPI3/I2S3/SPI4/UART4/5/TIM8/Infrared	SPI2/I2S2/SPI3/I2S3/TIM1/8/20/Infrared	USART1/2/3/CAN/GPCOMP3/5/6	I2C3/GPCOMP1/2/3/4/5/6	CAN/TIM1/8/15	TIM2/3/4/8/17	TIM1/8	FSMC/TIM1	-	-	EVENT
Port D	PD5	-	EVENT OUT	-	-	-	-	-	USART2_TX	-	-	-	-	FMC_NWE	-	-	-
	PD6	-	EVENT OUT	TIM2_CH4	-	-	-	-	USART2_RX	-	-	-	-	FMC_NWAIT	-	-	-
	PD7	-	EVENT OUT	TIM2_CH3	-	-	-	-	USART2_CK	-	-	-	-	FMC_NE1/FMC_NCE2	-	-	-
	PD8	-	EVENT OUT	-	-	-	-	-	USART3_TX	-	-	-	-	FMC_D13	-	-	-
	PD9	-	EVENT OUT	-	-	-	-	-	USART3_RX	-	-	-	-	FMC_D14	-	-	-
	PD10	-	EVENT OUT	-	-	-	-	-	USART3_CK	-	-	-	-	FMC_D15	-	-	-
	PD11	-	EVENT OUT	-	-	-	-	-	USART3_CTS	-	-	-	-	FMC_A16	-	-	-
	PD12	-	EVENT OUT	TIM4_CH1	TSC_G8_IO1	-	-	-	USART3_RTS	-	-	-	-	FMC_A17	-	-	-
	PD13	-	EVENT OUT	TIM4_CH2	TSC_G8_IO2	-	-	-	-	-	-	-	-	FMC_A18	-	-	-
	PD14	-	EVENT OUT	TIM4_CH3	TSC_G8_IO3	-	-	-	-	-	-	-	-	FMC_D0	-	-	-
	PD15	-	EVENT OUT	TIM4_CH4	TSC_G8_IO4	-	-	SPI2_NSS	-	-	-	-	-	FMC_D1	-	-	-

Table 14. STM32F303xD/E alternate function mapping (continued)

Port		AF0	AF1	AF2	AF3	AF4	AF5	AF6	AF7	AF8	AF9	AF10	AF11	AF12	AF13	AF14	AF15
		SYS_AF	TIM2/15/16/17/EVENT	I2C3/TIM1/2/3/4/8/20/15/GPCOMP1	I2C3/TIM8/20/15/GPCOMP7/TSC	I2C1/2/TIM1/8/16/17	SPI1/SPI2/I2S2/SPI3/I2S3/SPI4/UART4/5/TIM8/Infrared	SPI2/I2S2/SPI3/I2S3/TIM1/8/20/Infrared	USART1/2/3/CAN/GPCOMP3/5/6	I2C3/GPCOMP1/2/3/4/5/6	CAN/TIM1/8/15	TIM2/3/4/8/17	TIM1/8	FSMC/TIM1	-	-	EVENT
Port E	PE0	-	EVENT OUT	TIM4_ETR	-	TIM16_CH1	-	TIM20_ETR	USART1_TX	-	-	-	-	FMC_NBL0	-	-	-
	PE1	-	EVENT OUT	-	-	TIM17_CH1	-	TIM20_CH4	USART1_RX	-	-	-	-	FMC_NBL1	-	-	-
	PE2	TRACECK	EVENT OUT	TIM3_CH1	TSC_G7_IO1	-	SPI4_SCK	TIM20_CH1	-	-	-	-	-	FMC_A23	-	-	-
	PE3	TRACED0	EVENT OUT	TIM3_CH2	TSC_G7_IO2	-	SPI4_NSS	TIM20_CH2	-	-	-	-	-	FMC_A19	-	-	-
	PE4	TRACED1	EVENT OUT	TIM3_CH3	TSC_G7_IO3	-	SPI4_NSS	TIM20_CH1N	-	-	-	-	-	FMC_A20	-	-	-
	PE5	TRACED2	EVENT OUT	TIM3_CH4	TSC_G7_IO4	-	SPI4_MISO	TIM20_CH2N	-	-	-	-	-	FMC_A21	-	-	-
	PE6	TRACED3	EVENT OUT	-	-	-	SPI4_MOSI	TIM20_CH3N	-	-	-	-	-	FMC_A22	-	-	-
	PE7	-	EVENT OUT	TIM1_ETR	-	-	-	-	-	-	-	-	-	FMC_D4	-	-	-
	PE8	-	EVENT OUT	TIM1_CH1N	-	-	-	-	-	-	-	-	-	FMC_D5	-	-	-
	PE9	-	EVENT OUT	TIM1_CH1	-	-	-	-	-	-	-	-	-	FMC_D6	-	-	-
	PE10	-	EVENT OUT	TIM1_CH2N	-	-	-	-	-	-	-	-	-	FMC_D7	-	-	-
	PE11	-	EVENT OUT	TIM1_CH2	-	-	SPI4_NSS	-	-	-	-	-	-	FMC_D8	-	-	-

Table 14. STM32F303xD/E alternate function mapping (continued)

Port		AF0	AF1	AF2	AF3	AF4	AF5	AF6	AF7	AF8	AF9	AF10	AF11	AF12	AF13	AF14	AF15
		SYS_AF	TIM2/15/16/17/EVENT	I2C3/TIM1/2/3/4/8/20/15/GPCOMP1	I2C3/TIM8/20/15/GPCOMP7/TSC	I2C1/2/TIM1/8/16/17	SPI1/SPI2/I2S2/SPI3/I2S3/SPI4/UART4/5/TIM8/Infrared	SPI2/I2S2/SPI3/I2S3/TIM1/8/20/Infrared	USART1/2/3/CAN/GPCOMP3/5/6	I2C3/GPCOMP1/2/3/4/5/6	CAN/TIM1/8/15	TIM2/3/4/8/17	TIM1/8	FSMC/TIM1	-	-	EVENT
Port E	PE12	-	EVENT OUT	TIM1_CH3N	-	-	SPI4_SCK	-	-	-	-	-	-	FMC_D9	-	-	-
	PE13	-	EVENT OUT	TIM1_CH3	-	-	SPI4_MISO	-	-	-	-	-	-	FMC_D10	-	-	-
	PE14	-	EVENT OUT	TIM1_CH4	-	-	SPI4_MOSI	TIM1_BKIN2	-	-	-	-	-	FMC_D11	-	-	-
	PE15	-	EVENT OUT	TIM1_BKIN	-	-	-	-	USART3_RX	-	-	-	-	FMC_D12	-	-	-
Port F	PF0	-	EVENT OUT	-	-	I2C2_SDA	SPI2_NSS/I2S2_WS	TIM1_CH3N	-	-	-	-	-	-	-	-	-
	PF1	-	EVENT OUT	-	-	I2C2_SCL	SPI2_SCK/I2S2_CK	-	-	-	-	-	-	-	-	-	-
	PF2	-	EVENT OUT	TIM20_CH3	-	-	-	-	-	-	-	-	-	FMC_A2	-	-	-
	PF3	-	EVENT OUT	TIM20_CH4	-	-	-	-	-	-	-	-	-	FMC_A3	-	-	-
	PF4	-	EVENT OUT	COMP1_OUT	TIM20_CH1N	-	-	-	-	-	-	-	-	FMC_A4	-	-	-
	PF5	-	EVENT OUT	TIM20_CH2N	-	-	-	-	-	-	-	-	-	FMC_A5	-	-	-
	PF6	-	EVENT OUT	TIM4_CH4	-	I2C2_SCL	-	-	USART3_RTS	-	-	-	-	FMC_NIORD	-	-	-
	PF7	-	EVENT OUT	TIM20_BKIN	-	-	-	-	-	-	-	-	-	FMC_NREG	-	-	-

Table 14. STM32F303xD/E alternate function mapping (continued)

Port		AF0	AF1	AF2	AF3	AF4	AF5	AF6	AF7	AF8	AF9	AF10	AF11	AF12	AF13	AF14	AF15
		SYS_AF	TIM2/15/16/17/EVENT	I2C3/TIM1/2/3/4/8/20/15/GPCOMP1	I2C3/TIM8/20/15/GPCOMP7/TSC	I2C1/2/TIM1/8/16/17	SPI1/SPI2/I2S2/SPI3/I2S3/SPI4/UART4/5/TIM8/Infrared	SPI2/I2S2/SPI3/I2S3/TIM1/8/20/Infrared	USART1/2/3/CAN/GPCOMP3/5/6	I2C3/GPCOMP1/2/3/4/5/6	CAN/TIM1/8/15	TIM2/3/4/8/17	TIM1/8	FSMC/TIM1	-	-	EVENT
Port F	PF8	-	EVENT OUT	TIM20_BKIN2	-	-	-	-	-	-	-	-	-	FMC_NIOWR	-	-	-
	PF9	-	EVENT OUT	TIM20_BKIN	TIM15_CH1	-	SPI2_SCK	-	-	-	-	-	-	FMC_CD	-	-	-
	PF10	-	EVENT OUT	TIM20_BKIN2	TIM15_CH2	-	SPI2_SCK	-	-	-	-	-	-	FMC_INTR	-	-	-
	PF11	-	EVENT OUT	TIM20_ETR	-	-	-	-	-	-	-	-	-	-	-	-	-
	PF12	-	EVENT OUT	TIM20_CH1	-	-	-	-	-	-	-	-	-	FMC_A6	-	-	-
	PF13	-	EVENT OUT	TIM20_CH2	-	-	-	-	-	-	-	-	-	FMC_A7	-	-	-
	PF14	-	EVENT OUT	TIM20_CH3	-	-	-	-	-	-	-	-	-	FMC_A8	-	-	-
	PF15	-	EVENT OUT	TIM20_CH4	-	-	-	-	-	-	-	-	-	FMC_A9	-	-	-
Port G	PG0	-	EVENT OUT	TIM20_CH1N	-	-	-	-	-	-	-	-	-	FMC_A10	-	-	-
	PG1	-	EVENT OUT	TIM20_CH2N	-	-	-	-	-	-	-	-	-	FMC_A11	-	-	-
	PG2	-	EVENT OUT	TIM20_CH3N	-	-	-	-	-	-	-	-	-	FMC_A12	-	-	-
	PG3	-	EVENT OUT	TIM20_BKIN	-	-	-	-	-	-	-	-	-	FMC_A13	-	-	-
	PG4	-	EVENT OUT	TIM20_BKIN2	-	-	-	-	-	-	-	-	-	FMC_A14	-	-	-

Table 14. STM32F303xD/E alternate function mapping (continued)

Port		AF0	AF1	AF2	AF3	AF4	AF5	AF6	AF7	AF8	AF9	AF10	AF11	AF12	AF13	AF14	AF15
		SYS_AF	TIM2/15/16/17/EVENT	I2C3/TIM1/2/3/4/8/20/15/GPCOMP1	I2C3/TIM8/20/15/GPCOMP7/TSC	I2C1/2/TIM1/8/16/17	SPI1/SPI2/I2S2/SPI3/I2S3/SPI4/UART4/5/TIM8/Infrared	SPI2/I2S2/SPI3/I2S3/TIM1/8/20/Infrared	USART1/2/3/CAN/GPCOMP3/5/6	I2C3/GPCOMP1/2/3/4/5/6	CAN/TIM1/8/15	TIM2/3/4/8/17	TIM1/8	FSMC/TIM1	-	-	EVENT
Port G	PG5	-	EVENT OUT	TIM20_ETR	-	-	-	-	-	-	-	-	-	FMC_A15	-	-	-
	PG6	-	EVENT OUT	-	-	-	-	-	-	-	-	-	-	FMC_INT2	-	-	-
	PG7	-	EVENT OUT	-	-	-	-	-	-	-	-	-	-	FMC_INT3	-	-	-
	PG8	-	EVENT OUT	-	-	-	-	-	-	-	-	-	-	-	-	-	-
	PG9	-	EVENT OUT	-	-	-	-	-	-	-	-	-	-	FMC_NE2/FMC_NCE3	-	-	-
	PG10	-	EVENT OUT	-	-	-	-	-	-	-	-	-	-	FMC_NCE4_1/FMC_NE3	-	-	-
	PG11	-	EVENT OUT	-	-	-	-	-	-	-	-	-	-	FMC_NCE4_2	-	-	-
	PG12	-	EVENT OUT	-	-	-	-	-	-	-	-	-	-	FMC_NE4	-	-	-
	PG13	-	EVENT OUT	-	-	-	-	-	-	-	-	-	-	FMC_A24	-	-	-
	PG14	-	EVENT OUT	-	-	-	-	-	-	-	-	-	-	FMC_A25	-	-	-
	PG15	-	EVENT OUT	-	-	-	-	-	-	-	-	-	-	-	-	-	-

Table 14. STM32F303xD/E alternate function mapping (continued)

Port		AF0	AF1	AF2	AF3	AF4	AF5	AF6	AF7	AF8	AF9	AF10	AF11	AF12	AF13	AF14	AF15
		SYS_AF	TIM2/15/16/17/EVENT	I2C3/TIM1/2/3/4/8/20/15/GPCOMP1	I2C3/TIM8/20/15/GPCOMP7/TSC	I2C1/2/TIM1/8/16/17	SPI1/SPI2/I2S2/SPI3/I2S3/SPI4/UART4/5/TIM8/Infrared	SPI2/I2S2/SPI3/I2S3/TIM1/8/20/Infrared	USART1/2/3/CAN/GPCOMP3/5/6	I2C3/GPCOMP1/2/3/4/5/6	CAN/TIM1/8/15	TIM2/3/4/8/17	TIM1/8	FSMC/TIM1	-	-	EVENT
Port H	PH0	-	EVENT OUT	TIM20_CH1	-	-	-	-	-	-	-	-	-	FMC_A0	-	-	-
	PH1	-	EVENT OUT	TIM20_CH2	-	-	-	-	-	-	-	-	-	FMC_A1	-	-	-
	PH2	-	EVENT OUT	-	-	-	-	-	-	-	-	-	-	-	-	-	-

5 Memory mapping

Figure 9. STM32F303xD/E memory map

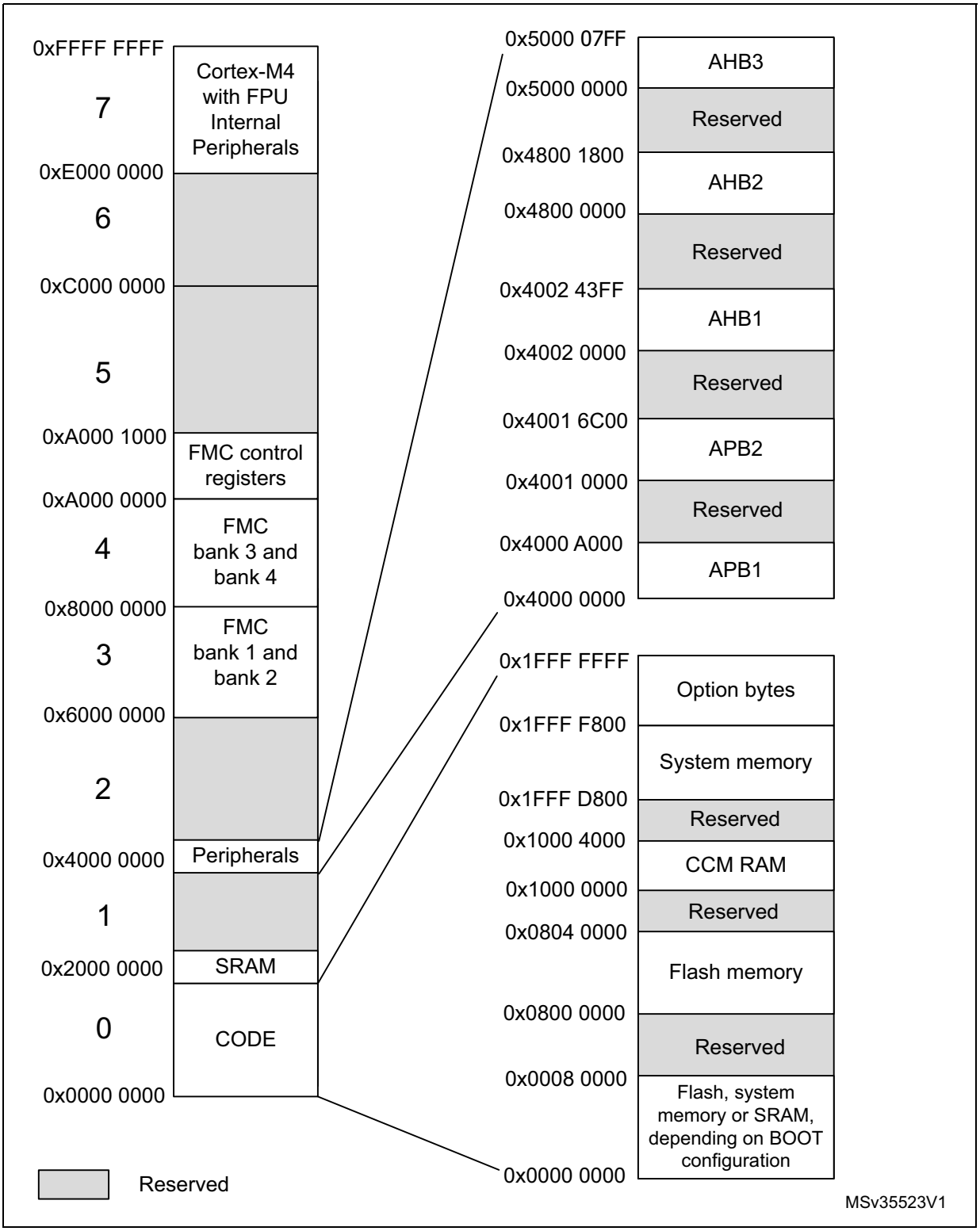

Table 15. Memory map, peripheral register boundary addresses

Bus	Boundary address	Size (bytes)	Peripheral
AHB4	0xA000 0000 - 0xA000 0FFF	4 K	FSMC control registers
	0x8000 0000 - 0x9FFF FFFF	512 M	FSMC Banks 3 and 4
	0x6000 0000 - 0x7FFF FFFF	512 M	FSMC Banks 1 and 2
-	0x5000 0800 - 0x5FFF FFFF	384 M	Reserved
AHB3	0x5000 0400 - 0x5000 07FF	1 K	ADC3 - ADC4
	0x5000 0000 - 0x5000 03FF	1 K	ADC1 - ADC2
-	0x4800 2000 - 0x4FFF FFFF	~132 M	Reserved
AHB2	0x4800 1C00 - 0x4800 1FFF	1 K	GPIOH
	0x4800 1800 - 0x4800 1BFF	1 K	GPIOG
	0x4800 1400 - 0x4800 17FF	1 K	GPIOF
	0x4800 1000 - 0x4800 13FF	1 K	GPIOE
	0x4800 0C00 - 0x4800 0FFF	1 K	GPIOD
	0x4800 0800 - 0x4800 0BFF	1 K	GPIOC
	0x4800 0400 - 0x4800 07FF	1 K	GPIOB
	0x4800 0000 - 0x4800 03FF	1 K	GPIOA
-	0x4002 4400 - 0x47FF FFFF	~128 M	Reserved
AHB1	0x4002 4000 - 0x4002 43FF	1 K	TSC
	0x4002 3400 - 0x4002 3FFF	3 K	Reserved
	0x4002 3000 - 0x4002 33FF	1 K	CRC
	0x4002 2400 - 0x4002 2FFF	3 K	Reserved
	0x4002 2000 - 0x4002 23FF	1 K	Flash interface
	0x4002 1400 - 0x4002 1FFF	3 K	Reserved
	0x4002 1000 - 0x4002 13FF	1 K	RCC
	0x4002 0800 - 0x4002 0FFF	2 K	Reserved
	0x4002 0400 - 0x4002 07FF	1 K	DMA2
	0x4002 0000 - 0x4002 03FF	1 K	DMA1

Table 15. Memory map, peripheral register boundary addresses (continued)

Bus	Boundary address	Size (bytes)	Peripheral
-	0x4001 8000 - 0x4001 FFFF	32 K	Reserved
	0x4001 5400 - 0x4001 7FFF	11 K	Reserved
	0x4001 5000 - 0x4001 53FF	1 K	TIM20
	0x4001 4C00 - 0x4001 4FFF	1 K	Reserved
	0x4001 4800 - 0x4001 4BFF	1 K	TIM17
	0x4001 4400 - 0x4001 47FF	1 K	TIM16
	0x4001 4000 - 0x4001 43FF	1 K	TIM15
	0x4001 3C00 - 0x4001 3FFF	1 K	SPI4
	0x4001 3800 - 0x4001 3BFF	1 K	USART1
	0x4001 3400 - 0x4001 37FF	1 K	TIM8
	0x4001 3000 - 0x4001 33FF	1 K	SPI1
APB2	0x4001 2C00 - 0x4001 2FFF	1 K	TIM1
	0x4001 0800 - 0x4001 2BFF	9 K	Reserved
	0x4001 0400 - 0x4001 07FF	1 K	EXTI
	0x4001 0000 - 0x4001 03FF	1 K	SYSCFG + COMP + OPAMP
-	0x4000 7C00 - 0x4000 FFFF	32 K	Reserved

Table 15. Memory map, peripheral register boundary addresses (continued)

Bus	Boundary address	Size (bytes)	Peripheral
APB1	0x4000 7800 - 0x4000 7BFF	1 K	I2C3
	0x4000 7400 - 0x4000 77FF	1 K	DAC
	0x4000 7000 - 0x4000 73FF	1 K	PWR
	0x4000 6800 - 0x4000 6FFF	2 K	Reserved
	0x4000 6400 - 0x4000 67FF	1 K	bxCAN
	0x4000 6000 - 0x4000 63FF	1 K	USB/CAN SRAM
	0x4000 5C00 - 0x4000 5FFF	1 K	USB device FS
	0x4000 5800 - 0x4000 5BFF	1 K	I2C2
	0x4000 5400 - 0x4000 57FF	1 K	I2C1
	0x4000 5000 - 0x4000 53FF	1 K	UART5
	0x4000 4C00 - 0x4000 4FFF	1 K	UART4
	0x4000 4800 - 0x4000 4BFF	1 K	USART3
	0x4000 4400 - 0x4000 47FF	1 K	USART2
	0x4000 4000 - 0x4000 43FF	1 K	I2S3ext
	0x4000 3C00 - 0x4000 3FFF	1 K	SPI3/I2S3
	0x4000 3800 - 0x4000 3BFF	1 K	SPI2/I2S2
	0x4000 3400 - 0x4000 37FF	1 K	I2S2ext
	0x4000 3000 - 0x4000 33FF	1 K	IWDG
	0x4000 2C00 - 0x4000 2FFF	1 K	WWDG
	0x4000 2800 - 0x4000 2BFF	1 K	RTC
	0x4000 1800 - 0x4000 27FF	4 K	Reserved
	0x4000 1400 - 0x4000 17FF	1 K	TIM7
	0x4000 1000 - 0x4000 13FF	1 K	TIM6
	0x4000 0C00 - 0x4000 0FFF	1 K	Reserved
	0x4000 0800 - 0x4000 0BFF	1 K	TIM4
	0x4000 0400 - 0x4000 07FF	1 K	TIM3
	0x4000 0000 - 0x4000 03FF	1 K	TIM2

6 Electrical characteristics

6.1 Parameter conditions

Unless otherwise specified, all voltages are referenced to V_{SS}.

6.1.1 Minimum and maximum values

Unless otherwise specified, the minimum and maximum values are guaranteed in the worst conditions of ambient temperature, supply voltage and frequencies by tests in production on 100% of the devices with an ambient temperature at T_A = 25 °C and T_A = $T_A$max (given by the selected temperature range).

Data based on characterization results, design simulation and/or technology characteristics are indicated in the table footnotes and are not tested in production. Based on characterization, the minimum and maximum values refer to sample tests and represent the mean value plus or minus three times the standard deviation (mean±3σ).

6.1.2 Typical values

Unless otherwise specified, typical data are based on T_A = 25 °C, V_{DD} = V_{DDA} = 2.0 to 3.6 V. They are given only as design guidelines and are not tested.

Typical ADC accuracy values are determined by characterization of a batch of samples from a standard diffusion lot over the full temperature range, where 95% of the devices have an error less than or equal to the value indicated (mean±2σ).

6.1.3 Typical curves

Unless otherwise specified, all typical curves are given only as design guidelines and are not tested.

6.1.4 Loading capacitor

The loading conditions used for pin parameter measurement are shown in *Figure 10*.

6.1.5 Pin input voltage

The input voltage measurement on a pin of the device is described in *Figure 11*.

Figure 10. Pin loading conditions

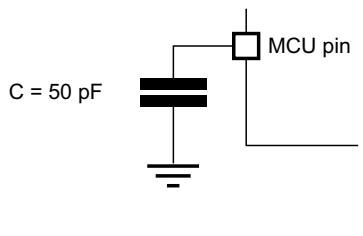

Figure 11. Pin input voltage

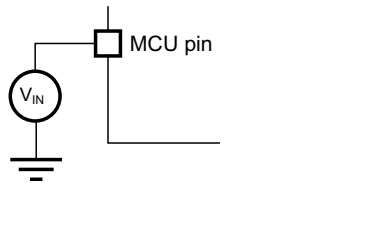

6.1.6 Power supply scheme

Figure 12. Power supply scheme

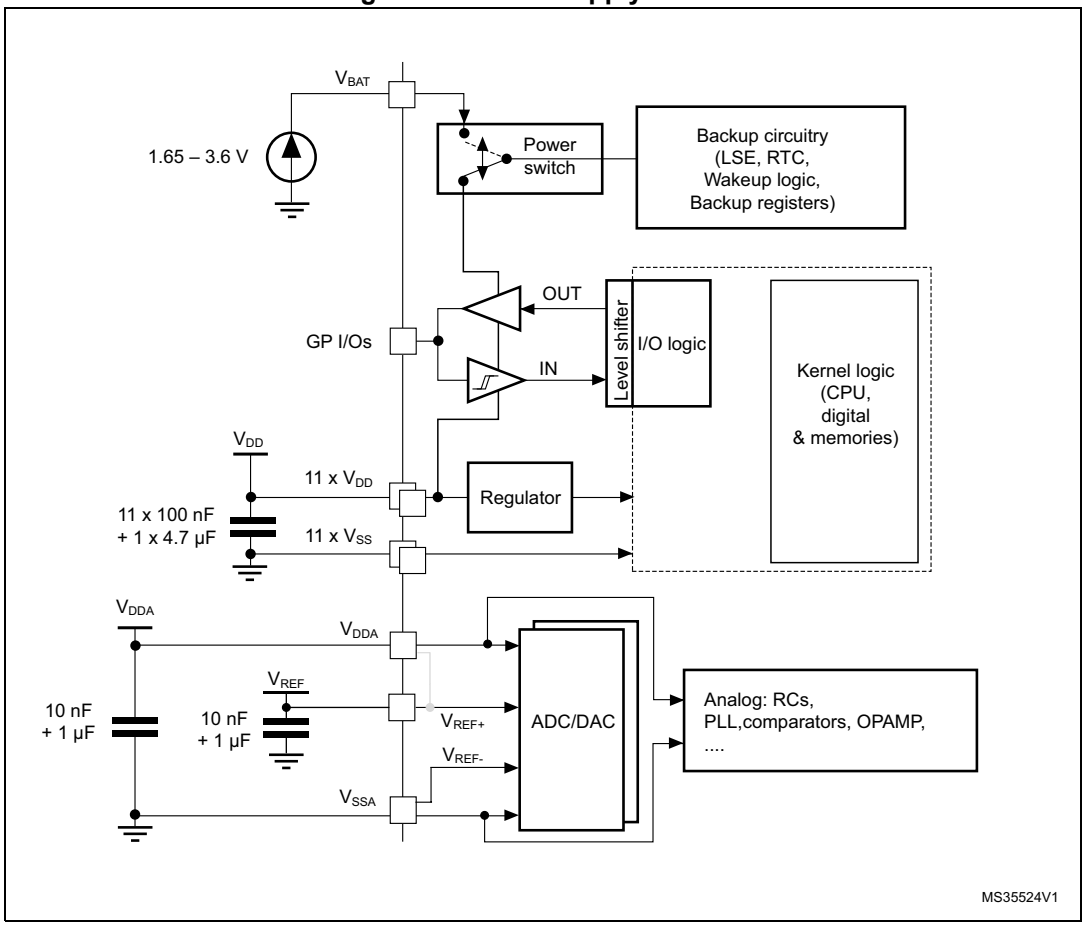

1. Dotted lines represent the internal connections on low pin count packages, joining the dedicated supply pins.

Caution: Each power supply pair (V_{DD}/V_{SS}, V_{DDA}/V_{SSA} etc.) must be decoupled with filtering ceramic capacitors as shown above. These capacitors must be placed as close as possible to, or below the appropriate pins on the underside of the PCB to ensure the good functionality of the device.

6.1.7 Current consumption measurement

Figure 13. Current consumption measurement scheme

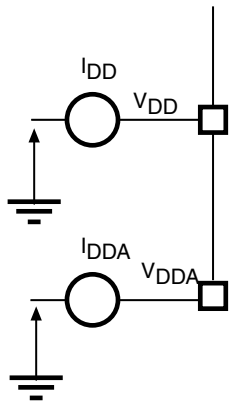

6.2 Absolute maximum ratings

Stresses above the absolute maximum ratings listed in *Table 16: Voltage characteristics*, *Table 17: Current characteristics*, and *Table 18: Thermal characteristics* may cause permanent damage to the device. These are stress ratings only and functional operation of the device at these conditions is not implied. Exposure to maximum rating conditions for extended periods may affect device reliability.

Table 16. Voltage characteristics(1)

Symbol	Ratings	Min	Max	Unit
$V_{DD}-V_{SS}$	External main supply voltage (including V_{DDA}, V_{BAT} and V_{DD})	-0.3	4.0	V
$V_{DD}-V_{DDA}$	Allowed voltage difference for $V_{DD} > V_{DDA}$	-	0.4	
$V_{REF+}-V_{DDA}$(2)	Allowed voltage difference for $V_{REF+} > V_{DDA}$	-	0.4	
V_{IN}(3)	Input voltage on FT and FTf pins	V_{SS} –0.3	V_{DD} + 4.0	V
	Input voltage on TTa pins	V_{SS} –0.3	4.0	
	Input voltage on any other pin	V_{SS} –0.3	4.0	
	Input voltage on Boot0 pin	0	9	
$\|\Delta V_{DDx}\|$	Variations between different V_{DD} power pins	-	50	mV
$\|V_{SSX} - V_{SS}\|$	Variations between all the different ground pins	-	50	
$V_{ESD(HBM)}$	Electrostatic discharge voltage (human body model)	see *Section 6.3.13: Electrical sensitivity characteristics*		-

1. All main power (V_{DD}, V_{DDA}) and ground (V_{SS}, V_{SSA}) pins must always be connected to the external power supply, in the permitted range. The following relationship must be respected between V_{DDA} and V_{DD}:
V_{DDA} must power on before or at the same time as V_{DD} in the power up sequence.
V_{DDA} must be greater than or equal to V_{DD}.
2. V_{REF+} must be always lower or equal than V_{DDA} ($V_{REF+} \leq V_{DDA}$). If unused then it must be connected to V_{DDA}.
3. V_{IN} maximum must always be respected. Refer to *Table 17: Current characteristics* for the maximum allowed injected current values.

Table 17. Current characteristics

Symbol	Ratings	Max.	Unit
ΣI_{VDD}	Total current into sum of all VDD_x power lines (source)	160	mA
ΣI_{VSS}	Total current out of sum of all VSS_x ground lines (sink)	-160	
I_{VDD}	Maximum current into each V_{DD_x} power line (source)(1)	100	
I_{VSS}	Maximum current out of each V_{SS_x} ground line (sink)(1)	100	
$I_{IO(PIN)}$	Output current sunk by any I/O and control pin	25	
	Output current source by any I/O and control pin	-25	
$\Sigma I_{IO(PIN)}$	Total output current sunk by sum of all IOs and control pins(2)	80	
	Total output current sourced by sum of all IOs and control pins(2)	-80	
$I_{INJ(PIN)}$	Injected current on FT, FTf, and B pins(3)	-5/+0	
	Injected current on TC and RST pin(4)	±5	
	Injected current on TTa pins(5)	±5	
$\Sigma I_{INJ(PIN)}$	Total injected current (sum of all I/O and control pins)(6)	±25	

1. All main power (V_{DD}, V_{DDA}) and ground (V_{SS} and V_{SSA}) pins must always be connected to the external power supply, in the permitted range.
2. This current consumption must be correctly distributed over all I/Os and control pins.The total output current must not be sunk/sourced between two consecutive power supply pins referring to high pin count LQFP packages.
3. Positive injection is not possible on these I/Os and does not occur for input voltages lower than the specified maximum value.
4. A positive injection is induced by $V_{IN} > V_{DD}$ while a negative injection is induced by $V_{IN} < V_{SS}$. $I_{INJ(PIN)}$ must never be exceeded. Refer to *Table 16: Voltage characteristics* for the maximum allowed input voltage values.
5. A positive injection is induced by $V_{IN} > V_{DDA}$ while a negative injection is induced by $V_{IN} < V_{SS}$. I_{INJ}(PIN) must never be exceeded. Refer also to *Table 16: Voltage characteristics* for the maximum allowed input voltage values. Negative injection disturbs the analog performance of the device. See note (2) below *Table 81*.
6. When several inputs are submitted to a current injection, the maximum $\Sigma I_{INJ(PIN)}$ is the absolute sum of the positive and negative injected currents (instantaneous values).

Table 18. Thermal characteristics

Symbol	Ratings	Value	Unit
T_{STG}	Storage temperature range	-65 to +150	°C
T_J	Maximum junction temperature	150	°C

6.3 Operating conditions

6.3.1 General operating conditions

Table 19. General operating conditions

Symbol	Parameter	Conditions	Min	Max	Unit
f_{HCLK}	Internal AHB clock frequency	-	0	72	MHz
f_{PCLK1}	Internal APB1 clock frequency	-	0	36	
f_{PCLK2}	Internal APB2 clock frequency	-	0	72	
V_{DD}	Standard operating voltage	-	2	3.6	V
V_{DDA}	Analog operating voltage (OPAMP and DAC not used)	Must have a potential equal to or higher than V_{DD}	2	3.6	V
	Analog operating voltage (OPAMP and DAC used)		2.4	3.6	
V_{BAT}	Backup operating voltage	-	1.65	3.6	V
V_{IN}	I/O input voltage	TC I/O	-0.3	V_{DD}+0.3	V
		TTa I/O	-0.3	V_{DDA}+0.3	
		FT and FTf I/O(1)	-0.3	5.5	
		BOOT0	0	5.5	
P_D	Power dissipation at T_A = 85 °C for suffix 6 or T_A = 105 °C for suffix 7(2)	LQFP144	-	606	mW
		WLCSP100	-	454	
		LQFP100	-	476	
		UFBGA100	-	339	
		LQFP64	-	435	
T_A	Ambient temperature for 6 suffix version	Maximum power dissipation	-40	85	°C
		Low power dissipation(3)	-40	105	
	Ambient temperature for 7 suffix version	Maximum power dissipation	-40	105	°C
		Low power dissipation(3)	-40	125	
T_J	Junction temperature range	6 suffix version	-40	105	°C
		7 suffix version	-40	125	

1. To sustain a voltage higher than V_{DD}+0.3 V, the internal pull-up/pull-down resistors must be disabled.
2. If T_A is lower, higher P_D values are allowed as long as T_J does not exceed T_{Jmax} (see *Section 7.7: Thermal characteristics*).
3. In low power dissipation state, T_A can be extended to this range as long as T_J does not exceed T_{Jmax} (see *Section 7.7: Thermal characteristics*).

6.3.2 Operating conditions at power-up / power-down

The parameters given in *Table 20* are derived from tests performed under the ambient temperature condition summarized in *Table 19*.

Table 20. Operating conditions at power-up / power-down

Symbol	Parameter	Conditions	Min	Max	Unit
t_{VDD}	V_{DD} rise time rate	-	0	∞	µs/V
	V_{DD} fall time rate		20	∞	
t_{VDDA}	V_{DDA} rise time rate	-	0	∞	
	V_{DDA} fall time rate		20	∞	

6.3.3 Embedded reset and power control block characteristics

The parameters given in *Table 21* are derived from tests performed under ambient temperature and V_{DD} supply voltage conditions summarized in *Table 19*.

Table 21. Embedded reset and power control block characteristics

Symbol	Parameter	Conditions	Min.	Typ.	Max.	Unit
$V_{POR/PDR}$(1)	Power on/power down reset threshold	Falling edge	1.8(2)	1.88	1.96	V
		Rising edge	1.84	1.92	2.0	V
$V_{PDRhyst}$(1)	PDR hysteresis	-	-	40	-	mV

1. The PDR detector monitors V_{DD} and also V_{DDA} (if kept enabled in the option bytes). The POR detector monitors only V_{DD}.
2. The product behavior is guaranteed by design down to the minimum $V_{POR/PDR}$ value.

Table 22. Programmable voltage detector characteristics

Symbol	Parameter	Conditions	Min(1)	Typ	Max(1)	Unit
V_{PVD0}	PVD threshold 0	Rising edge	2.1	2.18	2.26	V
		Falling edge	2	2.08	2.16	
V_{PVD1}	PVD threshold 1	Rising edge	2.19	2.28	2.37	
		Falling edge	2.09	2.18	2.27	
V_{PVD2}	PVD threshold 2	Rising edge	2.28	2.38	2.48	
		Falling edge	2.18	2.28	2.38	
V_{PVD3}	PVD threshold 3	Rising edge	2.38	2.48	2.58	
		Falling edge	2.28	2.38	2.48	
V_{PVD4}	PVD threshold 4	Rising edge	2.47	2.58	2.69	
		Falling edge	2.37	2.48	2.59	
V_{PVD5}	PVD threshold 5	Rising edge	2.57	2.68	2.79	
		Falling edge	2.47	2.58	2.69	

Table 22. Programmable voltage detector characteristics (continued)

Symbol	Parameter	Conditions	Min(1)	Typ	Max(1)	Unit
V_{PVD6}	PVD threshold 6	Rising edge	2.66	2.78	2.9	V
		Falling edge	2.56	2.68	2.8	
V_{PVD7}	PVD threshold 7	Rising edge	2.76	2.88	3	
		Falling edge	2.66	2.78	2.9	
$V_{PVDhyst}$(2)	PVD hysteresis	-	-	100	-	mV
IDD(PVD)	PVD current consumption	-	-	0.15	0.26	µA

1. Data based on characterization results only, not tested in production.
2. Guaranteed by design, not tested in production.

6.3.4 Embedded reference voltage

The parameters given in *Table 23* are derived from tests performed under ambient temperature and V_{DD} supply voltage conditions summarized in *Table 19*.

Table 23. Embedded internal reference voltage

Symbol	Parameter	Conditions	Min	Typ	Max	Unit
V_{REFINT}	Internal reference voltage	–40 °C < T_A < +105 °C	1.16	1.2	1.25	V
		–40 °C < T_A < +85 °C	1.16	1.2	1.24(1)	V
$T_{S_vrefint}$	ADC sampling time when reading the internal reference voltage	-	2.2	-	-	µs
V_{RERINT}	Internal reference voltage spread over the temperature range	V_{DD} = 3 V ±10 mV	-	-	10(2)	mV
T_{Coeff}	Temperature coefficient	-	-	-	100(2)	ppm/°C

1. Data based on characterization results, not tested in production.
2. Guaranteed by design, not tested in production.

Table 24. Internal reference voltage calibration values

Calibration value name	Description	Memory address
V_{REFINT_CAL}	Raw data acquired at temperature of 30 °C V_{DDA}= 3.3 V	0x1FFF F7BA - 0x1FFF F7BB

6.3.5 Supply current characteristics

The current consumption is a function of several parameters and factors such as the operating voltage, ambient temperature, I/O pin loading, device software configuration, operating frequencies, I/O pin switching rate, program location in memory and executed binary code.
The current consumption is measured as described in *Figure 13: Current consumption measurement scheme*.

All Run-mode current consumption measurements given in this section are performed with a reduced code that gives a consumption equivalent to CoreMark code.

Note: The total current consumption is the sum of I_{DD} and I_{DDA}.

Typical and maximum current consumption

The MCU is placed under the following conditions:

- All I/O pins are in input mode with a static value at V_{DD} or V_{SS} (no load)
- All peripherals are disabled except when explicitly mentioned
- The Flash memory access time is adjusted to the f_{HCLK} frequency (0 wait state from 0 to 24 MHz,1 wait state from 24 to 48 MHz and 2 wait states from 48 to 72 MHz)
- Prefetch in ON (reminder: this bit must be set before clock setting and bus prescaling)
- When the peripherals are enabled $f_{PCLK2} = f_{HCLK}$ and $f_{PCLK1} = f_{HCLK/2}$
- When f_{HCLK} > 8 MHz, the PLL is ON and the PLL input is equal to HSI/2 (4 MHz) or HSE (8 MHz) in bypass mode.

The parameters given in *Table 25* to *Table 29* are derived from tests performed under ambient temperature and supply voltage conditions summarized in *Table 19*.

Table 25. Typical and maximum current consumption from V_{DD} supply at V_{DD} = 3.6V

Symbol	Parameter	Conditions	f_{HCLK}	All peripherals enabled				All peripherals disabled				Unit
				Typ	Max @ T_A(1)			Typ	Max @ T_A(1)			
					25 °C	85 °C	105 °C		25 °C	85 °C	105 °C	
I_{DD}	Supply current in Run mode, executing from Flash	External clock (HSE bypass)	72 MHz	66.4	76.5	76.9	77.4	33.0	37.2	38.1	38.9	mA
			64 MHz	59.8	66.4	67.7	68.6	29.7	33.5	34.3	35.0	
			48 MHz	47.3	53.7	53.8	55.1	23.2	26.2	27.1	28.0	
			32 MHz	33.3	36.8	37.4	38.5	16.8	19.8	20.6	21.4	
			24 MHz	26.0	29.4	30.0	31.2	13.5	16.6	17.4	18.6	
			8 MHz	10.7	13.8	14.4	15.3	6.63	10.2	10.5	11.2	
			1 MHz	4.27	7.47	8.13	8.90	3.78	7.40	7.70	8.50	
		Internal clock (HSI)	64 MHz	55.6	59.6	62.8	63.2	29.4	33.1	34.5	35.0	
			48 MHz	43.6	47.0	49.2	50.1	23.1	26.2	27.1	28.0	
			32 MHz	30.8	33.6	35.3	35.8	16.7	19.8	20.6	21.5	
			24 MHz	24.0	28.0	28.2	29.7	13.5	16.5	17.5	18.4	
			8 MHz	10.5	13.6	14.7	15.2	6.63	9.74	10.6	11.2	
I_{DD}	Supply current in Run mode, executing from RAM	External clock (HSE bypass)	72 MHz	66.2	76.2(2)	76.7	77.2(2)	32.8	36.9(2)	37.7	38.5(2)	
			64 MHz	59.6	66.2	67.6	68.4	29.3	33.1	33.9	34.4	
			48 MHz	47.0	53.4	53.6	54.9	22.4	25.6	26.2	27.2	
			32 MHz	33.0	36.6	37.2	38.1	16.0	19.0	19.5	20.4	
			24 MHz	25.6	29.0	29.5	30.6	12.8	15.7	16.3	17.6	
			8 MHz	10.3	13.4	13.8	14.7	6.40	9.48	9.93	10.90	

Table 25. Typical and maximum current consumption from V_{DD} supply at V_{DD} = 3.6V (continued)

Symbol	Parameter	Conditions	f_{HCLK}	All peripherals enabled				All peripherals disabled				Unit
				Typ	Max @ T_A(1)			Typ	Max @ T_A(1)			
					25 °C	85 °C	105 °C		25 °C	85 °C	105 °C	
I_{DD}	Supply current in Run mode, executing from RAM	External clock (HSE bypass)	1 MHz	3.92	7.06	7.54	8.60	3.42	6.53	7.05	8.10	mA
		Internal clock (HSI)	64 MHz	55.4	59.2	62.5	62.9	29.1	32.7	34.0	34.6	
			48 MHz	43.1	46.7	49.0	49.9	22.8	26.1	26.8	27.8	
			32 MHz	30.5	33.2	35.0	35.5	15.8	18.8	19.5	20.9	
			24 MHz	23.8	27.8	27.9	29.2	12.6	15.6	16.3	17.5	
			8 MHz	9.85	13.1	14.1	14.6	6.20	9.37	10.3	10.7	
I_{DD}	Supply current in Sleep mode, executing from Flash or RAM	External clock (HSE bypass)	72 MHz	48.8	53.5(2)	53.6	54.0(2)	7.60	8.20(2)	8.50	9.00(2)	
			64 MHz	43.5	48.6	49.1	49.3	6.90	7.50	7.80	8.00	
			48 MHz	33.6	38.1	40.0	41.3	5.30	5.80	6.00	6.40	
			32 MHz	24.3	27.5	28.1	29.3	3.80	4.10	4.40	4.70	
			24 MHz	18.6	21.9	22.4	22.6	2.90	3.30	3.40	3.90	
			8 MHz	8.24	11.27	11.79	12.70	1.36	1.74	1.85	2.00	
			1 MHz	3.64	6.72	7.36	8.30	0.79	1.17	1.26	1.35	
		Internal clock (HSI)	64 MHz	39.7	43.9	45.5	45.8	6.70	7.30	7.40	7.70	
			48 MHz	30.4	33.9	35.3	36.5	5.10	5.60	5.70	6.10	
			32 MHz	21.9	25.8	26.2	26.7	3.60	4.10	4.20	4.50	
			24 MHz	17.0	20.2	21.5	21.7	2.98	3.41	3.46	3.57	
			8 MHz	7.81	11.0	11.7	12.4	1.41	1.74	1.81	1.87	

1. Data based on characterization results, not tested in production unless otherwise specified.
2. Data based on characterization results and tested in production with code executing from RAM.

Table 26. Typical and maximum current consumption from the V_{DDA} supply

Symbol	Parameter	Conditions (1)	f_{HCLK}	V_{DDA} = 2.4 V				V_{DDA} = 3.6 V				Unit
				Typ	Max @ T_A(2)			Typ	Max @ T_A(2)			
					25 °C	85 °C	105 °C		25 °C	85 °C	105 °C	
I_{DDA}	Supply current in Run mode, code executing from Flash or RAM	HSE bypass	72 MHz	220	243	255	260	241	264	281	287	µA
			64 MHz	194	215	226	231	212	233	248	254	
			48 MHz	145	164	172	176	158	176	187	192	
			32 MHz	100	116	121	124	108	123	130	134	
			24 MHz	78	92	96	98	85	97	102	105	
			8 MHz	1.9	3.1	3.6	4.4	2.5	3.7	4.4	5.5	

Table 26. Typical and maximum current consumption from the V_{DDA} supply (continued)

Symbol	Parameter	Conditions (1)	f_{HCLK}	V_{DDA} = 2.4 V				V_{DDA} = 3.6 V				Unit
				Typ	Max @ T_A(2)			Typ	Max @ T_A(2)			
					25 °C	85 °C	105 °C		25 °C	85 °C	105 °C	
I_{DDA}	Supply current in Run mode, code executing from Flash or RAM	HSE bypass	1 MHz	1.9	3.1	3.6	4.4	2.5	3.7	4.4	5.5	µA
		HSI clock	64 MHz	266	290	301	306	295	320	335	341	
			48 MHz	216	237	247	251	240	262	274	279	
			32 MHz	170	188	196	199	190	208	217	221	
			24 MHz	148	164	170	172	166	182	189	192	
			8 MHz	70	78	81	82	84	92	95	97	

1. Current consumption from the V_{DDA} supply is independent of whether the peripherals are on or off. Furthermore when the PLL is off, I_{DDA} is independent from the frequency.
2. Data based on characterization results, not tested in production.

Table 27. Typical and maximum V_{DD} consumption in Stop and Standby modes

Symbol	Parameter	Conditions	Typ @V_{DD} (V_{DD}=V_{DDA})						Max			Unit
			2.0 V	2.4 V	2.7 V	3.0 V	3.3 V	3.6 V	T_A = 25 °C	T_A = 85 °C	T_A = 105 °C	
I_{DD}	Supply current in Stop mode	Regulator in run mode, all oscillators OFF	18.4	18.7	18.8	18.9	19.0	19.1	47	435	940	µA
		Regulator in low-power mode, all oscillators OFF	6.80	6.94	7.11	7.18	7.26	7.39	33	408	898	
	Supply current in Standby mode	LSI ON and IWDG ON	0.72	0.87	0.99	1.10	1.23	1.37	-	-	-	
		LSI OFF and IWDG OFF	0.57	0.68	0.76	0.85	0.94	1.03	6.2	8.6	13.5	

Table 28. Typical and maximum V_{DDA} consumption in Stop and Standby modes

Symbol	Parameter	Conditions		Typ @V_{DD} (V_{DD} = V_{DDA})						Max(1)			Unit
				2.0 V	2.4 V	2.7 V	3.0 V	3.3 V	3.6 V	T_A = 25 °C	T_A = 85 °C	T_A = 105 °C	
I_{DDA}	Supply current in Stop mode	V_{DDA} supervisor ON	Regulator in run/low-power mode, all oscillators OFF	1.72	1.85	1.97	2.10	2.25	2.41	10.7	11	12	µA
	Supply current in Standby mode		LSI ON and IWDG ON	2.08	2.26	2.43	2.61	2.82	3.05	-	-	-	
			LSI OFF and IWDG OFF	1.60	1.73	1.85	1.98	2.13	2.29	3.6	4	6	
	Supply current in Stop mode	V_{DDA} supervisor OFF	Regulator in run/low-power mode, all oscillators OFF	1.00	1.02	1.05	1.10	1.16	1.24	-	-	-	
	Supply current in Standby mode		LSI ON and IWDG ON	1.36	1.43	1.51	1.61	1.74	1.88	-	-	-	
			LSI OFF and IWDG OFF	0.88	0.90	0.93	0.98	1.05	1.12	-	-	-	

1. Data based on characterization results, not tested in production.

Table 29. Typical and maximum current consumption from V_{BAT} supply

Symbol	Parameter	Conditions (1)	Typ @V_{BAT}								Max @V_{BAT} = 3.6 V(2)			Unit
			1.65V	1.8V	2V	2.4V	2.7V	3V	3.3V	3.6V	T_A = 25°C	T_A = 85°C	T_A = 105°C	
I_{DD_VBAT}	Backup domain supply current	LSE & RTC ON; “Xtal mode”lower driving capability; LSEDRV[1:0] = '00'	0.48	0.50	0.52	0.58	0.65	0.72	0.80	0.90	1.1	1.5	2.0	µA
		LSE & RTC ON; “Xtal mode” higher driving capability; LSEDRV[1:0] = '11'	0.83	0.86	0.90	0.98	1.03	1.10	1.20	1.30	1.5	2.2	2.9	

1. Crystal used: Abracon ABS07-120-32.768 kHz-T with a CL of 6 pF for typical values.
2. Data based on characterization results, not tested in production.

Figure 14. Typical V_{BAT} current consumption (LSE and RTC ON/LSEDRV[1:0] 00')

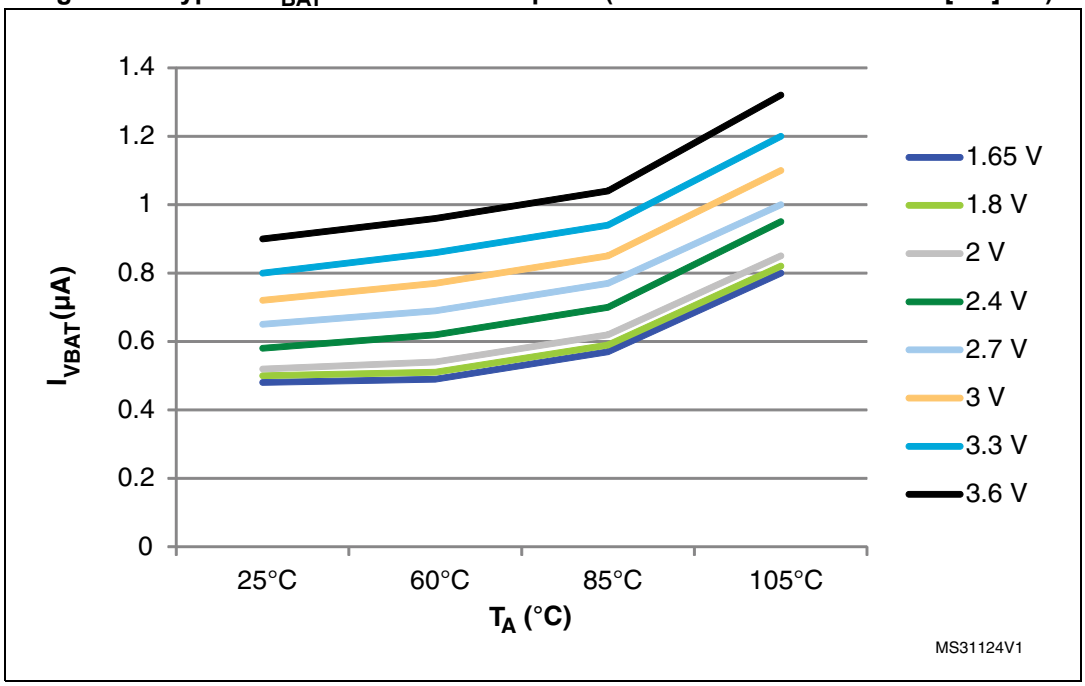

Typical current consumption

The MCU is placed under the following conditions:

- $V_{DD} = V_{DDA} = 3.3$ V
- All I/O pins available on each package are in analog input configuration
- The Flash access time is adjusted to f_{HCLK} frequency (0 wait states from 0 to 24 MHz, 1 wait state from 24 to 48 MHz and 2 wait states from 48 MHz to 72 MHz), and Flash prefetch is ON
- When the peripherals are enabled, $f_{APB1} = f_{AHB/2}$, $f_{APB2} = f_{AHB}$
- PLL is used for frequencies greater than 8 MHz
- AHB prescaler of 2, 4, 8,16 and 64 is used for the frequencies 4 MHz, 2 MHz, 1 MHz, 500 kHz and 125 kHz respectively.

Table 30. Typical current consumption in Run mode, code with data processing running from Flash

Symbol	Parameter	Conditions	f_{HCLK}	Typ		Unit
				Peripherals enabled	Peripherals disabled	
I_{DD}	Supply current in Run mode from V_{DD} supply	Running from HSE crystal clock 8 MHz, code executing from Flash	72 MHz	60.7	27.3	mA
			64 MHz	54.3	24.1	
			48 MHz	42.1	19.4	
			32 MHz	28.7	13.9	
			24 MHz	22.2	11.0	
			16 MHz	15.4	7.9	
			8 MHz	8.3	4.51	
			4 MHz	5.14	3.02	
			2 MHz	3.37	2.21	
			1 MHz	2.49	1.80	
			500 kHz	2.04	1.57	
			125 kHz	1.71	0.84	
I_{DDA}(1) (2)	Supply current in Run mode from V_{DDA} supply		72 MHz	239.7		µA
			64 MHz	210.5		
			48 MHz	155.6		
			32 MHz	105.5		
			24 MHz	81.9		
			16 MHz	58.6		
			8 MHz	1.16		
			4 MHz	1.16		
			2 MHz	1.16		
			1 MHz	1.16		
			500 kHz	1.16		
			125 kHz	1.16		

1. V_{DDA} supervisor is OFF.
2. When peripherals are enabled, the power consumption of the analog part of peripherals such as ADC, DAC, Comparators, OpAmp is not included. Refer to the tables of characteristics in the subsequent sections.

Table 31. Typical current consumption in Sleep mode, code running from Flash or RAM

Symbol	Parameter	Conditions	f_{HCLK}	Typ		Unit
				Peripherals enabled	Peripherals disabled	
I_{DD}	Supply current in Sleep mode from V_{DD} supply	Running from HSE crystal clock 8 MHz, code executing from Flash or RAM	72 MHz	43.0	7.4	mA
			64 MHz	38.3	6.8	
			48 MHz	29.0	5.29	
			32 MHz	19.7	3.91	
			24 MHz	15.2	3.19	
			16 MHz	10.8	2.46	
			8 MHz	5.85	1.55	
			4 MHz	3.80	1.45	
			2 MHz	2.67	1.32	
			1 MHz	2.12	1.22	
			500 kHz	1.83	1.19	
			125 kHz	1.60	0.83	
I_{DDA}(1) (2)	Supply current in Sleep mode from V_{DDA} supply		72 MHz	239.7		µA
			64 MHz	210.5		
			48 MHz	155.6		
			32 MHz	105.5		
			24 MHz	81.9		
			16 MHz	58.6		
			8 MHz	1.16		
			4 MHz	1.16		
			2 MHz	1.16		
			1 MHz	1.16		
			500 kHz	1.16		
			125 kHz	1.16		

1. V_{DDA} supervisor is OFF.
2. When peripherals are enabled, the power consumption of the analog part of peripherals such as ADC, DAC, Comparators, OpAmp is not included. Refer to the tables of characteristics in the subsequent sections.

I/O system current consumption

The current consumption of the I/O system has two components: static and dynamic.

I/O static current consumption

All the I/Os used as inputs with pull-up generate current consumption when the pin is externally held low. The value of this current consumption can be simply computed by using the pull-up/pull-down resistors values given in *Table 66: I/O static characteristics*.

For the output pins, any external pull-down or external load must also be considered to estimate the current consumption.

Additional I/O current consumption is due to I/Os configured as inputs if an intermediate voltage level is externally applied. This current consumption is caused by the input Schmitt trigger circuits used to discriminate the input value. Unless this specific configuration is required by the application, this supply current consumption can be avoided by configuring these I/Os in analog mode. This is notably the case of ADC input pins which should be configured as analog inputs.

Caution: Any floating input pin can also settle to an intermediate voltage level or switch inadvertently, as a result of external electromagnetic noise. To avoid current consumption related to floating pins, they must either be configured in analog mode, or forced internally to a definite digital value. This can be done either by using pull-up/down resistors or by configuring the pins in output mode.

I/O dynamic current consumption

In addition to the internal peripheral current consumption (see*Table 33: Peripheral current consumption*), the I/Os used by an application also contribute to the current consumption. When an I/O pin switches, it uses the current from the MCU supply voltage to supply the I/O pin circuitry and to charge/discharge the capacitive load (internal or external) connected to the pin:

$$I_{SW} = V_{DD} \times f_{SW} \times C$$

where:

I_{SW} is the current sunk by a switching I/O to charge/discharge the capacitive load

V_{DD} is the MCU supply voltage

f_{SW} is the I/O switching frequency

C is the total capacitance seen by the I/O pin: $C = C_{INT} + C_{EXT} + C_S$

The test pin is configured in push-pull output mode and is toggled by software at a fixed frequency.

Table 32. Switching output I/O current consumption

Symbol	Parameter	Conditions[1]	I/O toggling frequency (f_{SW})	Typ	Unit
I_{SW}	I/O current consumption	V_{DD} = 3.3 V C_{ext} = 0 pF $C = C_{INT} + C_{EXT} + C_S$	2 MHz	0.90	mA
			4 MHz	0.93	
			8 MHz	1.16	
			18 MHz	1.60	
			36 MHz	2.51	
			48 MHz	2.97	
		V_{DD} = 3.3 V C_{ext} = 10 pF $C = C_{INT} + C_{EXT} + C_S$	2 MHz	0.93	
			4 MHz	1.06	
			8 MHz	1.47	
			18 MHz	2.26	
			36 MHz	3.39	
			48 MHz	5.99	
		V_{DD} = 3.3 V C_{ext} = 22 pF $C = C_{INT} + C_{EXT} + C_S$	2 MHz	1.03	
			4 MHz	1.30	
			8 MHz	1.79	
			18 MHz	3.01	
			36 MHz	5.99	
		V_{DD} = 3.3 V C_{ext} = 33 pF $C = C_{INT} + C_{EXT} + C_S$	2 MHz	1.10	
			4 MHz	1.31	
			8 MHz	2.06	
			18 MHz	3.47	
			36 MHz	8.35	
		V_{DD} = 3.3 V C_{ext} = 47 pF $C = C_{INT} + C_{EXT} + C_S$	2 MHz	1.20	
			4 MHz	1.54	
			8 MHz	2.46	
			18 MHz	4.51	
			36 MHz	9.98	

1. CS = 5 pF (estimated value).

On-chip peripheral current consumption

The MCU is placed under the following conditions:

- all I/O pins are in analog input configuration
- all peripherals are disabled unless otherwise mentioned
- the given value is calculated by measuring the current consumption
  - with all peripherals clocked off
  - with only one peripheral clocked on
- ambient operating temperature at 25°C and $V_{DD} = V_{DDA} = 3.3$ V.

Table 33. Peripheral current consumption

Peripheral	Typical consumption(1)	Unit
	I_{DD}	
BusMatrix (2)	8.3	µA/MHz
DMA1	7.0	
DMA2	5.4	
FSMC	35.0	
CRC	1.5	
GPIOH	1.3	
GPIOA	5.4	
GPIOB	5.3	
GPIOC	5.4	
GPIOD	5.0	
GPIOE	5.4	
GPIOF	5.2	
GPIOG	5.0	
TSC	5.2	
ADC1&2	15.4	
ADC3&4	16.2	
APB2-Bridge (3)	3.1	
SYSCFG	4.0	
TIM1	26.0	
SPI1	6.2	
TIM8	26.4	
USART1	17.7	
SPI4	6.2	
TIM15	11.9	
TIM16	8.0	
TIM17	8.5	
TIM20	25.3	

Table 33. Peripheral current consumption (continued)

Peripheral	Typical consumption(1)	Unit
	I_{DD}	
APB1-Bridge (3)	6.7	µA/MHz
TIM2	39.2	
TIM3	30.8	
TIM4	31.3	
TIM6	4.3	
TIM7	4.3	
WWDG	1.3	
SPI2	33.6	
SPI3	33.9	
USART2	39.3	
USART3	39.3	
UART4	29.8	
UART5	27.0	
I2C1	6.7	
I2C2	6.4	
USB	14.7	
CAN	25.6	
PWR	3.7	
DAC	22.1	
I2C3	6.8	

1. The power consumption of the analog part (I_{DDA}) of peripherals such as ADC, DAC, Comparators, OpAmp is not included. Refer to the tables of characteristics in the subsequent sections.
2. BusMatrix is automatically active when at least one master is ON (CPU, DMA1 or DMA2).
3. The APBx bridge is automatically active when at least one peripheral is ON on the same bus.

6.3.6 Wakeup time from low-power mode

The wakeup times given in *Table 34* are measured starting from the wakeup event trigger up to the first instruction executed by the CPU:

- For Stop or Sleep mode: the wakeup event is WFE.
- WKUP1 (PA0) pin is used to wake up from Standby, Stop and Sleep modes.

All timings are derived from tests performed under ambient temperature and V_{DD} supply voltage conditions summarized in *Table 19*.

Table 34. Low-power mode wakeup timings

Symbol	Parameter	Conditions	Typ @V_{DD}, $V_{DD} = V_{DDA}$						Max	Unit
			2.0 V	2.4 V	2.7 V	3 V	3.3 V	3.6 V		
t_{WUSTOP}	Wakeup from Stop mode	Regulator in run mode	5.4	5.2	5.2	5.1	5.0	4.9	5.6	µs
		Regulator in low power mode	12.0	10.1	9.2	8.6	8.1	7.8	12.9	
$t_{WUSTANDBY}$(1)	Wakeup from Standby mode	LSI and IWDG OFF	91.0	77.1	71.7	68.0	65.1	63.1	139	
$t_{WUSLEEP}$	Wakeup from Sleep mode	-	6						-	CPU clock cycles

1. Data based on characterization results, not tested in production.

Table 35. Wakeup time using USART

Symbol	Parameter	Conditions	Typ	Max	Unit
tWUUSART	Wakeup time needed to calculate the maximum USART baudrate allowing to wakeup up from stop mode when USART clock source is HSI	Stop mode with main regulator in low power mode	-	13.125	µs
		Stop mode with main regulator in run mode	-	3.125	

6.3.7 External clock source characteristics

High-speed external user clock generated from an external source

In bypass mode the HSE oscillator is switched off and the input pin is a standard GPIO. The external clock signal has to respect the I/O characteristics in *Section 6.3.15*. However, the recommended clock input waveform is shown in *Figure 15*.

Table 36. High-speed external user clock characteristics

Symbol	Parameter	Conditions	Min	Typ	Max	Unit
f_{HSE_ext}	User external clock source frequency(1)	-	1	8	32	MHz
V_{HSEH}	OSC_IN input pin high level voltage		$0.7V_{DD}$	-	V_{DD}	V
V_{HSEL}	OSC_IN input pin low level voltage		V_{SS}	-	$0.3V_{DD}$	
$t_{w(HSEH)}$ $t_{w(HSEL)}$	OSC_IN high or low time(1)		15	-	-	ns
$t_{r(HSE)}$ $t_{f(HSE)}$	OSC_IN rise or fall time(1)		-	-	20	

1. Guaranteed by design, not tested in production.

Figure 15. High-speed external clock source AC timing diagram

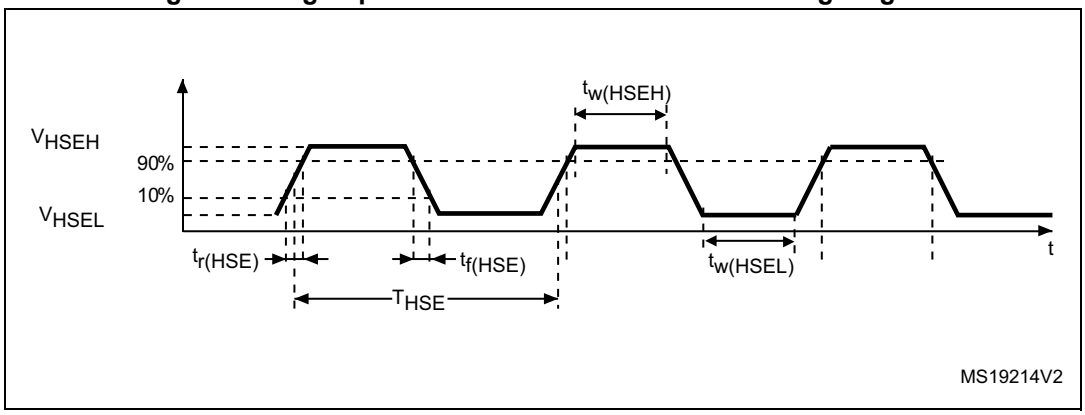

Low-speed external user clock generated from an external source

In bypass mode the LSE oscillator is switched off and the input pin is a standard GPIO. The external clock signal has to respect the I/O characteristics in *Section 6.3.15*. However, the recommended clock input waveform is shown in *Figure 16*.

Table 37. Low-speed external user clock characteristics

Symbol	Parameter	Conditions	Min	Typ	Max	Unit
f_{LSE_ext}	User External clock source frequency(1)	-	-	32.768	1000	kHz
V_{LSEH}	OSC32_IN input pin high level voltage	-	$0.7V_{DD}$	-	V_{DD}	V
V_{LSEL}	OSC32_IN input pin low level voltage		V_{SS}	-	$0.3V_{DD}$	
$t_{w(LSEH)}$ $t_{w(LSEL)}$	OSC32_IN high or low time(1)		450	-	-	ns
$t_{r(LSE)}$ $t_{f(LSE)}$	OSC32_IN rise or fall time(1)		-	-	50	

1. Guaranteed by design, not tested in production.

Figure 16. Low-speed external clock source AC timing diagram

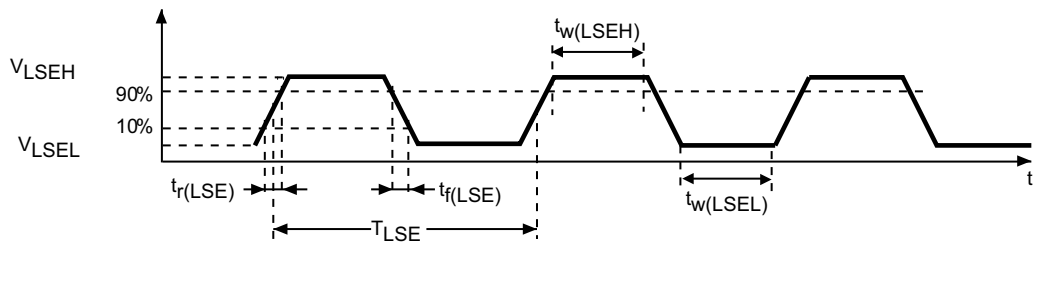

High-speed external clock generated from a crystal/ceramic resonator

The high-speed external (HSE) clock can be supplied with a 4 to 32 MHz crystal/ceramic resonator oscillator. All the information given in this paragraph are based on design simulation results obtained with typical external components specified in *Table 38*. In the application, the resonator and the load capacitors have to be placed as close as possible to the oscillator pins to minimize output distortion and startup stabilization time. Refer to the crystal resonator manufacturer for more details on the resonator characteristics (frequency, package, accuracy).

Table 38. HSE oscillator characteristics

Symbol	Parameter	Conditions[1]	Min[2]	Typ	Max[2]	Unit
f_{OSC_IN}	Oscillator frequency	-	4	8	32	MHz
R_F	Feedback resistor	-	-	200	-	kΩ
I_{DD}	HSE current consumption	During startup[3]	-	-	8.5	mA
		V_{DD}= 3.3 V, Rm= 30Ω, CL=10 pF@8 MHz	-	0.4	-	
		V_{DD}= 3.3 V, Rm= 45Ω, CL=10 pF@8 MHz	-	0.5	-	
		V_{DD}= 3.3 V, Rm= 30Ω, CL=5 pF@32 MHz	-	0.8	-	
		V_{DD}= 3.3 V, Rm= 30Ω, CL=10 pF@32 MHz	-	1	-	
		V_{DD}= 3.3 V, Rm= 30Ω, CL=20 pF@32 MHz	-	1.5	-	
g_m	Oscillator transconductance	Startup	10	-	-	mA/V
$t_{SU(HSE)}$[4]	Startup time	V_{DD} is stabilized	-	2	-	ms

1. Resonator characteristics given by the crystal/ceramic resonator manufacturer.
2. Guaranteed by design, not tested in production.
3. This consumption level occurs during the first 2/3 of the $t_{SU(HSE)}$ startup time.
4. $t_{SU(HSE)}$ is the startup time measured from the moment it is enabled (by software) to a stabilized 8 MHz oscillation is reached. This value is measured for a standard crystal resonator and it can vary significantly with the crystal manufacturer.

For C_{L1} and C_{L2}, it is recommended to use high-quality external ceramic capacitors in the 5 pF to 25 pF range (Typ.), designed for high-frequency applications, and selected to match the requirements of the crystal or resonator (see *Figure 17*). C_{L1} and C_{L2} are usually the same size. The crystal manufacturer typically specifies a load capacitance which is the series combination of C_{L1} and C_{L2}. PCB and MCU pin capacitance must be included (10 pF can be used as a rough estimate of the combined pin and board capacitance) when sizing C_{L1} and C_{L2}.

Note: For information on selecting the crystal, refer to the application note AN2867 "Oscillator design guide for ST microcontrollers" available from the ST website www.st.com.

Figure 17. Typical application with an 8 MHz crystal

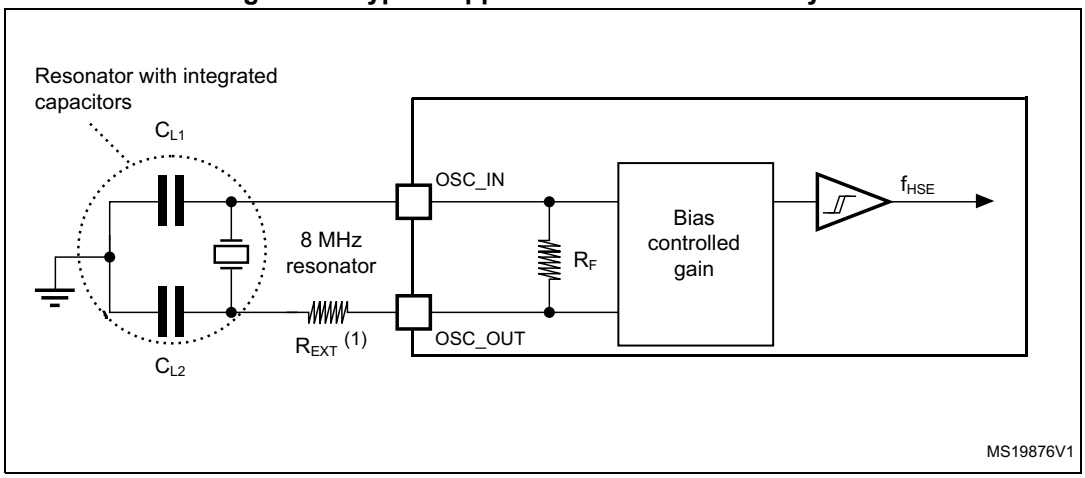

1. R_{EXT} value depends on the crystal characteristics.

Low-speed external clock generated from a crystal/ceramic resonator

The low-speed external (LSE) clock can be supplied with a 32.768 kHz crystal/ceramic resonator oscillator. All the information given in this paragraph are based on design simulation results obtained with typical external components specified in *Table 39*. In the application, the resonator and the load capacitors have to be placed as close as possible to the oscillator pins to minimize output distortion and startup stabilization time. Refer to the crystal resonator manufacturer for more details on the resonator characteristics (frequency, package, accuracy).

Table 39. LSE oscillator characteristics (f_{LSE} = 32.768 kHz)

Symbol	Parameter	Conditions(1)	Min(2)	Typ	Max(2)	Unit
I_{DD}	LSE current consumption	LSEDRV[1:0]=00 lower driving capability	-	0.5	0.9	µA
		LSEDRV[1:0]=01 medium low driving capability	-	-	1	
		LSEDRV[1:0]=10 medium high driving capability	-	-	1.3	
		LSEDRV[1:0]=11 higher driving capability	-	-	1.6	
g_m	Oscillator transconductance	LSEDRV[1:0]=00 lower driving capability	5	-	-	µA/V
		LSEDRV[1:0]=01 medium low driving capability	8	-	-	
		LSEDRV[1:0]=10 medium high driving capability	15	-	-	
		LSEDRV[1:0]=11 higher driving capability	25	-	-	
$t_{SU(LSE)}$(3)	Startup time	V_{DD} is stabilized	-	2	-	s

1. Refer to the note and caution paragraphs below the table, and to the application note AN2867 “Oscillator design guide for ST microcontrollers”.
2. Guaranteed by design, not tested in production.
3. $t_{SU(LSE)}$ is the startup time measured from the moment it is enabled (by software) to a stabilized 32.768 kHz oscillation is reached. This value is measured for a standard crystal and it can vary significantly with the crystal manufacturer.

Note: For information on selecting the crystal, refer to the application note AN2867 "Oscillator design guide for ST microcontrollers" available from the ST website www.st.com.

Figure 18. Typical application with a 32.768 kHz crystal

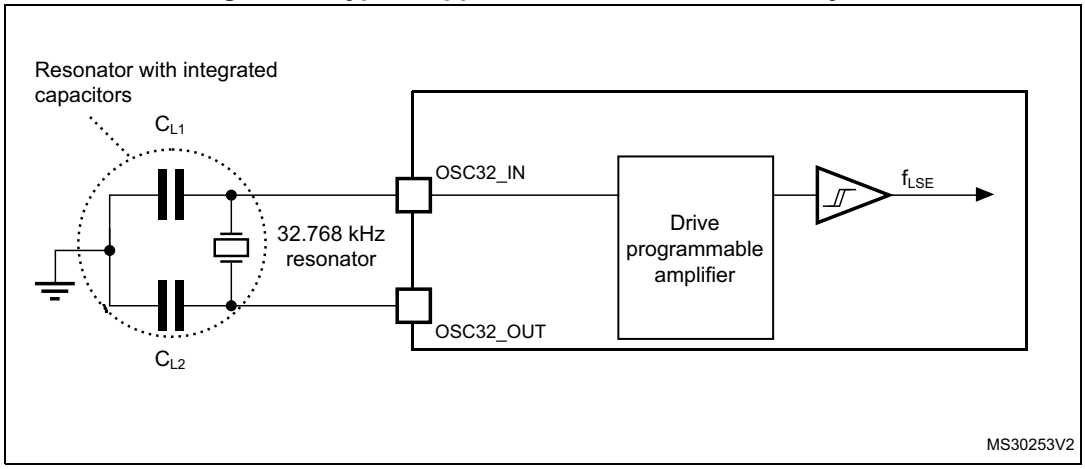

Note: An external resistor is not required between OSC32_IN and OSC32_OUT and it is forbidden to add one.

6.3.8 Internal clock source characteristics

The parameters given in *Table 40* are derived from tests performed under ambient temperature and supply voltage conditions summarized in *Table 19*.

High-speed internal (HSI) RC oscillator

Table 40. HSI oscillator characteristics(1)

Symbol	Parameter	Conditions	Min	Typ	Max	Unit
f_{HSI}	Frequency	-	-	8	-	MHz
TRIM	HSI user trimming step	-	-	-	1(2)	%
$DuCy_{(HSI)}$	Duty cycle	-	45(2)	-	55(2)	%
ACC_{HSI}	Accuracy of the HSI oscillator	T_A = -40 to 105°C	-2.8(3)	-	3.8(3)	%
		T_A = -10 to 85°C	-1.9(3)	-	2.3(3)	
		T_A = 0 to 85°C	-1.9(3)	-	2(3)	
		T_A = 0 to 70°C	-1.3(3)	-	2(3)	
		T_A = 0 to 55°C	-1(3)	-	2(3)	
		T_A = 25°C(4)	-1	-	1	
$t_{SU(HSI)}$	HSI oscillator startup time	-	1(2)	-	2(2)	µs
$I_{DDA(HSI)}$	HSI oscillator power consumption	-	-	80	100(2)	µA

1. V_{DDA} = 3.3 V, T_A = –40 to 105 °C unless otherwise specified.
2. Guaranteed by design, not tested in production.
3. Data based on characterization results, not tested in production.
4. Factory calibrated, parts not soldered.

Figure 19. HSI oscillator accuracy characterization results for soldered parts

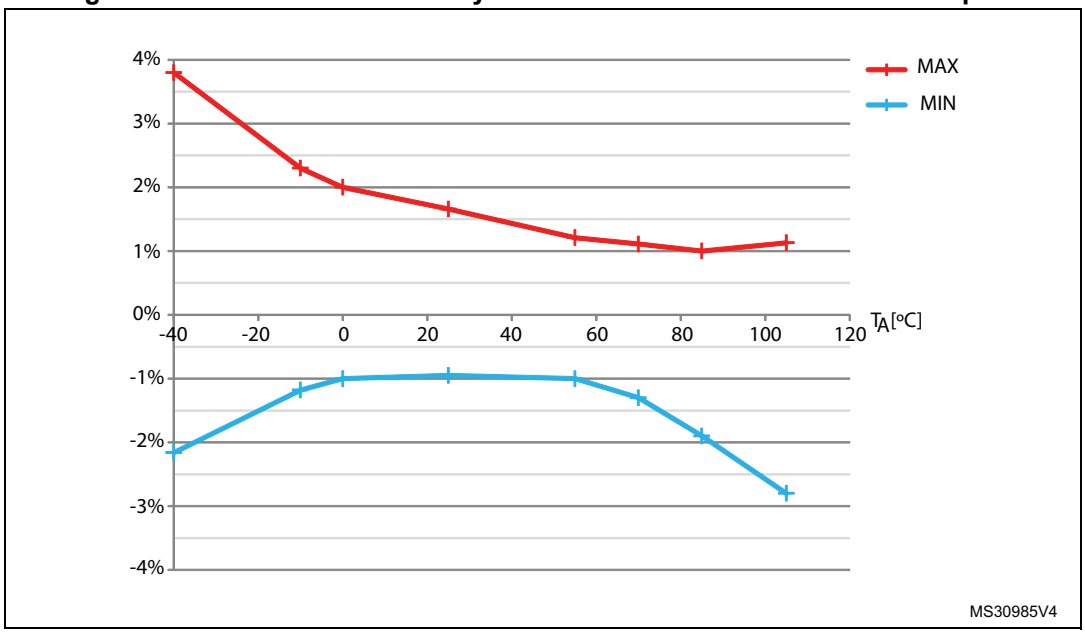

Low-speed internal (LSI) RC oscillator

Table 41. LSI oscillator characteristics(1)

Symbol	Parameter	Min	Typ	Max	Unit
f_{LSI}	Frequency	30	40	50	kHz
$t_{su(LSI)}$(2)	LSI oscillator startup time	-	-	85	µs
$I_{DD(LSI)}$(2)	LSI oscillator power consumption	-	0.75	1.2	µA

1. V_{DDA} = 3.3 V, T_A = –40 to 105 °C unless otherwise specified.
2. Guaranteed by design, not tested in production.

6.3.9 PLL characteristics

The parameters given in *Table 42* are derived from tests performed under ambient temperature and supply voltage conditions summarized in *Table 19*.

Table 42. PLL characteristics

Symbol	Parameter	Value			Unit
		Min	Typ	Max	
f_{PLL_IN}	PLL input clock(1)	1(2)	-	24(2)	MHz
	PLL input clock duty cycle	40(2)	-	60(2)	%
f_{PLL_OUT}	PLL multiplier output clock	16(2)	-	72	MHz
t_{LOCK}	PLL lock time	-	-	200(2)	µs
Jitter	Cycle-to-cycle jitter	-	-	300(2)	ps

1. Take care of using the appropriate multiplier factors so as to have PLL input clock values compatible with the range defined by f_{PLL_OUT}.
2. Guaranteed by design, not tested in production.

6.3.10 Memory characteristics

Flash memory

The characteristics are given at T_A = –40 to 105 °C unless otherwise specified.

Table 43. Flash memory characteristics

Symbol	Parameter	Conditions	Min	Typ	Max(1)	Unit
t_{prog}	16-bit programming time	T_A = –40 to +105 °C	40	53.5	60	µs
t_{ERASE}	Page (2 KB) erase time	T_A = –40 to +105 °C	20	-	40	ms
t_{ME}	Mass erase time	T_A = –40 to +105 °C	20	-	40	ms
I_{DD}	Supply current	Write mode	-	-	10	mA
		Erase mode	-	-	12	mA

1. Guaranteed by design, not tested in production.

Table 44. Flash memory endurance and data retention

Symbol	Parameter	Conditions	Value	Unit
			Min(1)	
N_{END}	Endurance	T_A = –40 to +85 °C (6 suffix versions) T_A = –40 to +105 °C (7 suffix versions)	10	kcycles
t_{RET}	Data retention	1 kcycle(2) at T_A = 85 °C	30	Years
		1 kcycle(2) at T_A = 105 °C	10	
		10 kcycle(2) at T_A = 55 °C	20	

1. Data based on characterization results, not tested in production.
2. Cycling performed over the whole temperature range.

6.3.11 FSMC characteristics

Unless otherwise specified, the parameters given in *Table 45* to *Table 60* for the FSMC interface are derived from tests performed under the ambient temperature, f_{HCLK} frequency and V_{DD} supply voltage conditions summarized in *Table 19* with the following configuration:

- Output speed is set to OSPEEDRy[1:0] = 11
- Capacitive load C = 30 pF
- Measurement points are done at CMOS levels: 0.5VDD

Refer to *Section 6.3.15: I/O port characteristics*: for more details on the input/output characteristics.

Asynchronous waveforms and timings

Figure 20 to *Figure 23* represent asynchronous waveforms and *Table 45* to *Table 52* provide the corresponding timings. The results shown in these tables are obtained with the following FSMC configuration:

- AddressSetupTime = 0x1
- AddressHoldTime = 0x1
- DataSetupTime = 0x1 (except for asynchronous NWAIT mode, DataSetupTime = 0x5)
- BusTurnAroundDuration = 0x0
- NOR NWAIT pulse width= 1THCLK

In all the timing tables, the T_{HCLK} is the HCLK clock period.

Figure 20. Asynchronous non-multiplexed SRAM/PSRAM/NOR read timings

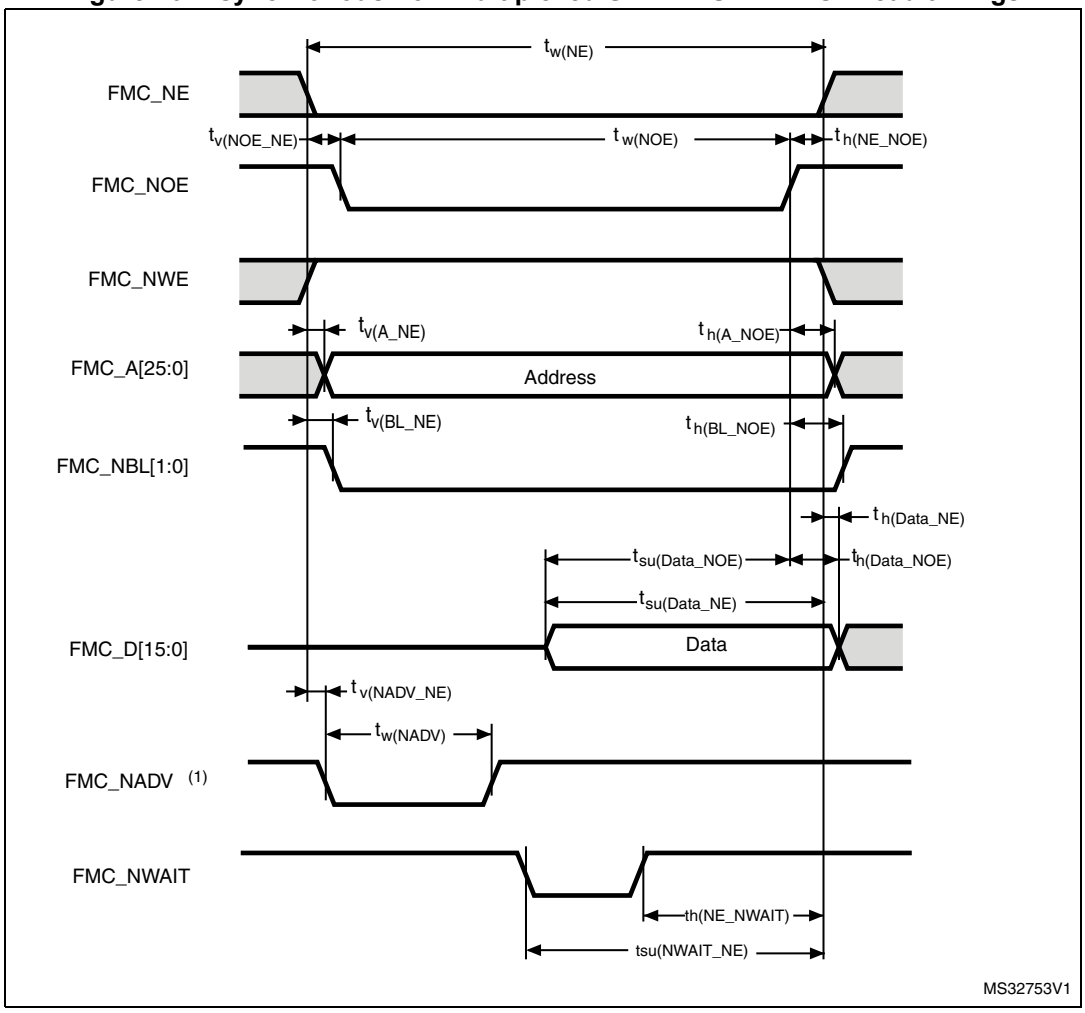

Table 45. Asynchronous non-multiplexed SRAM/PSRAM/NOR read timings(1)

Symbol	Parameter	Min	Max	Unit
$t_{w(NE)}$	FMC_NE low time	2THCLK– 1	2THCLK+1	ns
$t_{v(NOE_NE)}$	FMC_NEx low to FMC_NOE low	0	1	
$t_{w(NOE)}$	FMC_NOE low time	2THCLK	2THCLK+ 1.5	
$t_{h(NE_NOE)}$	FMC_NOE high to FMC_NE high hold time	0.5	-	
$t_{v(A_NE)}$	FMC_NEx low to FMC_A valid	-	3	
$t_{h(A_NOE)}$	Address hold time after FMC_NOE high	0	-	
$t_{v(BL_NE)}$	FMC_NEx low to FMC_BL valid	-	2 (NA)	
$t_{h(BL_NOE)}$	FMC_BL hold time after FMC_NOE high	0	-	
$t_{su(Data_NE)}$	Data to FMC_NEx high setup time	THCLK + 6	-	
$t_{su(Data_NOE)}$	Data to FMC_NOEx high setup time	THCLK +7	-	
$t_{h(Data_NOE)}$	Data hold time after FMC_NOE high	0	-	
$t_{h(Data_NE)}$	Data hold time after FMC_NEx high	0	-	
$t_{v(NADV_NE)}$	FMC_NEx low to FMC_NADV low	-	2	
$t_{w(NADV)}$	FMC_NADV low time	-	THCLK +1.5	

1. Based on characterization, not tested in production

Table 46. Asynchronous non-multiplexed SRAM/PSRAM/NOR read-NWAIT timings(1)

Symbol	Parameter	Min	Max	Unit
$t_{w(NE)}$	FMC_NE low time	7THCLK +0.5	7THCLK+ 1	ns
$t_{w(NOE)}$	FMC_NWE low time	6THCLK -1.5	6THCLK +2	
$t_{su(NWAIT_NE)}$	FMC_NWAIT valid before FMC_NEx high	4THCLK +5	-	
$t_{h(NE_NWAIT)}$	FMC_NEx hold time after FMC_NWAIT invalid	4THCLK-3	-	

1. Based on characterization, not tested in production.

Figure 21. Asynchronous non-multiplexed SRAM/PSRAM/NOR write timings

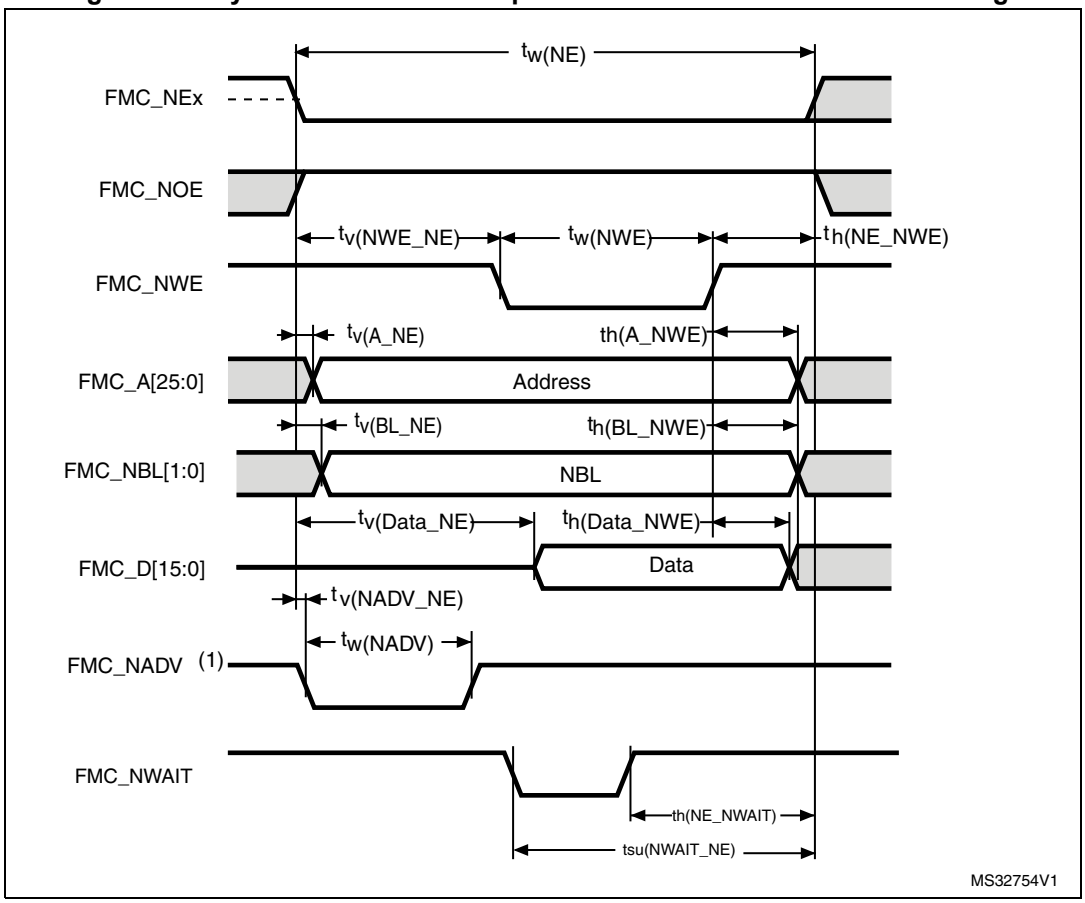

1. Mode 2/B, C and D only. In Mode 1, FMC_NADV is not used.

Table 47. Asynchronous non-multiplexed SRAM/PSRAM/NOR write timings(1)

Symbol	Parameter	Min	Max	Unit
$t_{w(NE)}$	FMC_NE low time	3THCLK-1	3THCLK+2	ns
$t_{v(NWE_NE)}$	FMC_NEx low to FMC_NWE low	THCLK+0.5	THCLK+1	
$t_{w(NWE)}$	FMC_NWE low time	THCLK-2	THCLK+1	
$t_{h(NE_NWE)}$	FMC_NWE high to FMC_NE high hold time	THCLK-0.5	-	
$t_{v(A_NE)}$	FMC_NEx low to FMC_A valid	-	0	
$t_{h(A_NWE)}$	Address hold time after FMC_NWE high	THCLK-1.5	-	
$t_{v(BL_NE)}$	FMC_NEx low to FMC_BL valid	-	1	
$t_{h(BL_NWE)}$	FMC_BL hold time after FMC_NWE high	THCLK-0.5	-	
$t_{v(Data_NE)}$	Data to FMC_NEx low to Data valid	-	THCLK+ 3	
$t_{h(Data_NWE)}$	Data hold time after FMC_NWE high	THCLK+0.5	-	
$t_{v(NADV_NE)}$	FMC_NEx low to FMC_NADV low	-	2.5	
$t_{w(NADV)}$	FMC_NADV low time	-	THCLK+2	

1. Based on characterization, not tested in production.

Table 48. Asynchronous non-multiplexed SRAM/PSRAM/NOR write-NWAIT timings(1)

Symbol	Parameter	Min	Max	Unit
$t_{w(NE)}$	FMC_NE low time	8THCLK+1	8THCLK+2	ns
$t_{w(NWE)}$	FMC_NWE low time	6THCLK-1	6THCLK+2	
$t_{su(NWAIT_NE)}$	FMC_NWAIT valid before FMC_NEx high	5THCLK-0.5	-	
$t_{h(NE_NWAIT)}$	FMC_NEx hold time after FMC_NWAIT invalid	4THCLK+2	-	

1. Based on characterization, not tested in production.

Table 49. Asynchronous multiplexed PSRAM/NOR read-NWAIT timings(1)

Symbol	Parameter	Min	Max	Unit
$t_{w(NE)}$	FMC_NE low time	8THCLK+2	8THCLK+2	ns
$t_{w(NOE)}$	FMC_NWE low time	6THCLK-1	6THCLK+1.5	
$t_{su(NWAIT_NE)}$	FMC_NWAIT valid before FMC_NEx high	4THCLK+6	-	
$t_{h(NE_NWAIT)}$	FMC_NEx hold time after FMC_NWAIT invalid	4THCLK-4	-	

1. Based on characterization, not tested in production.

Figure 22. Asynchronous multiplexed PSRAM/NOR read timings

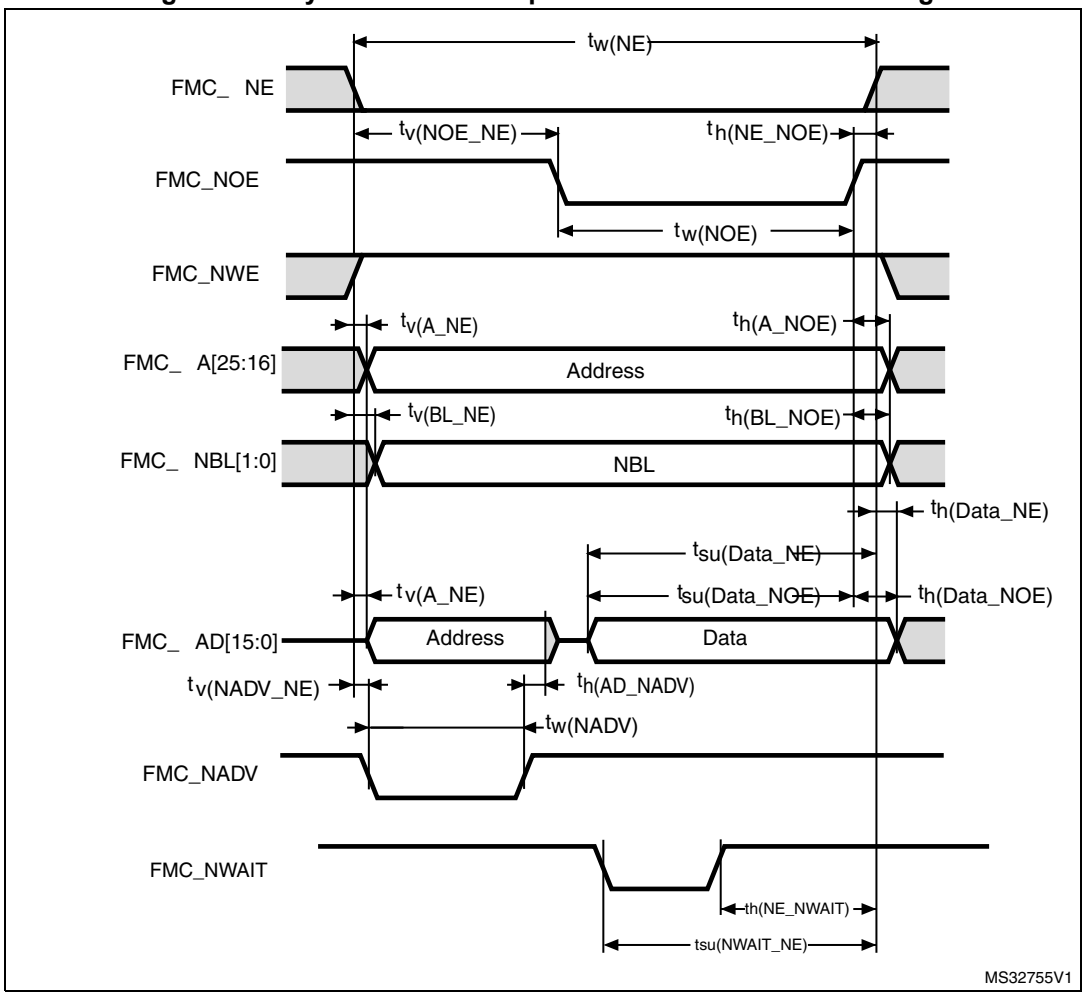

Table 50. Asynchronous multiplexed PSRAM/NOR read timings(1)

Symbol	Parameter	Min	Max	Unit
$t_{w(NE)}$	FMC_NE low time	3THCLK-0.5	3THCLK+1	ns
$t_{v(NOE_NE)}$	FMC_NEx low to FMC_NOE low	2THCLK	2THCLK+1	
$t_{w(NOE)}$	FMC_NOE low time	THCLK-2	THCLK+2	
$t_{h(NE_NOE)}$	FMC_NOE high to FMC_NE high hold time	0	-	
$t_{v(A_NE)}$	FMC_NEx low to FMC_A valid	-	1.5	
$t_{v(NADV_NE)}$	FMC_NEx low to FMC_NADV low	0	2	
$t_{w(NADV)}$	FMC_NADV low time	THCLK-2	THCLK+2	
$t_{h(AD_NADV)}$	FMC_AD(address) valid hold time after FMC_NADV high	0	-	
$t_{h(A_NOE)}$	Address hold time after FMC_NOE high	THCLK-0.5	-	
$t_{h(BL_NOE)}$	FMC_BL time after FMC_NOE high	0	-	

Table 50. Asynchronous multiplexed PSRAM/NOR read timings(1) (continued)

Symbol	Parameter	Min	Max	Unit
$t_{v(BL_NE)}$	FMC_NEx low to FMC_BL valid	-	2	ns
$t_{su(Data_NE)}$	Data to FMC_NEx high setup time	THCLK	-	
$t_{su(Data_NOE)}$	Data to FMC_NOE high setup time	THCLK+1	-	
$t_{h(Data_NE)}$	Data hold time after FMC_NEx high	0	-	
$t_{h(Data_NOE)}$	Data hold time after FMC_NOE high	0	-	

1. Based on characterization, not tested in production.

Figure 23. Asynchronous multiplexed PSRAM/NOR write timings

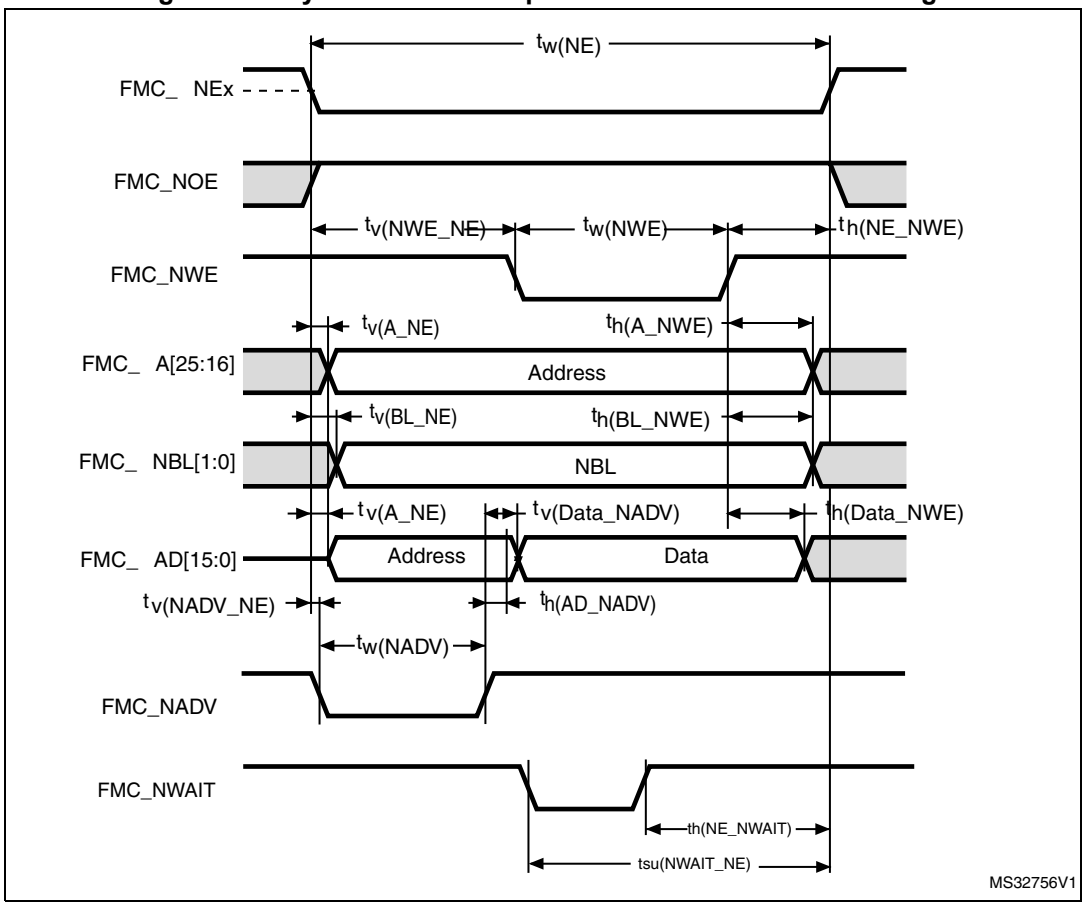

Table 51. Asynchronous multiplexed PSRAM/NOR write timings(1)

Symbol	Parameter	Min	Max	Unit
$t_{w(NE)}$	FMC_NE low time	4THCLK-1	4THCLK+1	ns
$t_{v(NWE_NE)}$	FMC_NEx low to FMC_NWE low	THCLK	THCLK+0.5	
$t_{w(NWE)}$	FMC_NWE low time	2THCLK-0.5	2THCLK+1	
$t_{h(NE_NWE)}$	FMC_NWE high to FMC_NE high hold time	THCLK-0.5	-	
$t_{v(A_NE)}$	FMC_NEx low to FMC_A valid	-	5	
$t_{v(NADV_NE)}$	FMC_NEx low to FMC_NADV low	1	2.5	
$t_{w(NADV)}$	FMC_NADV low time	THCLK-2	THCLK+2	
$t_{h(AD_NADV)}$	FMC_AD(adress) valid hold time after FMC_NADV high)	THCLK-2	-	
$t_{h(A_NWE)}$	Address hold time after FMC_NWE high	THCLK-1	-	
$t_{h(BL_NWE)}$	FMC_BL hold time after FMC_NWE high	THCLK-0.5	-	
$t_{v(BL_NE)}$	FMC_NEx low to FMC_BL valid	-	1	
$t_{v(Data_NADV)}$	FMC_NADV high to Data valid	-	THCLK +3.5	
$t_{h(Data_NWE)}$	Data hold time after FMC_NWE high	THCLK +0.5	-	

1. Based on characterization, not tested in production.

Table 52. Asynchronous multiplexed PSRAM/NOR write-NWAIT timings(1)

Symbol	Parameter	Min	Max	Unit
$t_{w(NE)}$	FMC_NE low time	9THCLK	9THCLK+0.5	ns
$t_{w(NWE)}$	FMC_NWE low time	6THCLK	6THCLK+2	
$t_{su(NWAIT_NE)}$	FMC_NWAIT valid before FMC_NEx high	5THCLK+6	-	
$t_{h(NE_NWAIT)}$	FMC_NEx hold time after FMC_NWAIT invalid	5THCLK-5	-	

1. Based on characterization, not tested in production.

Synchronous waveforms and timings

Figure 24 and *Figure 27* present the synchronous waveforms and *Table 53* to *Table 56* provide the corresponding timings. The results shown in these tables are obtained with the following FSMC configuration:

- BurstAccessMode = FMC_BurstAccessMode_Enable;
- MemoryType = FMC_MemoryType_CRAM;
- WriteBurst = FMC_WriteBurst_Enable;
- CLKDivision = 1;
- DataLatency = 2 for NOR Flash; DataLatency = 0 for PSRAM

In all timing tables, the THCLK is the HCLK clock period (with maximum FMC_CLK = 36 MHz).

Figure 24. Synchronous multiplexed NOR/PSRAM read timings

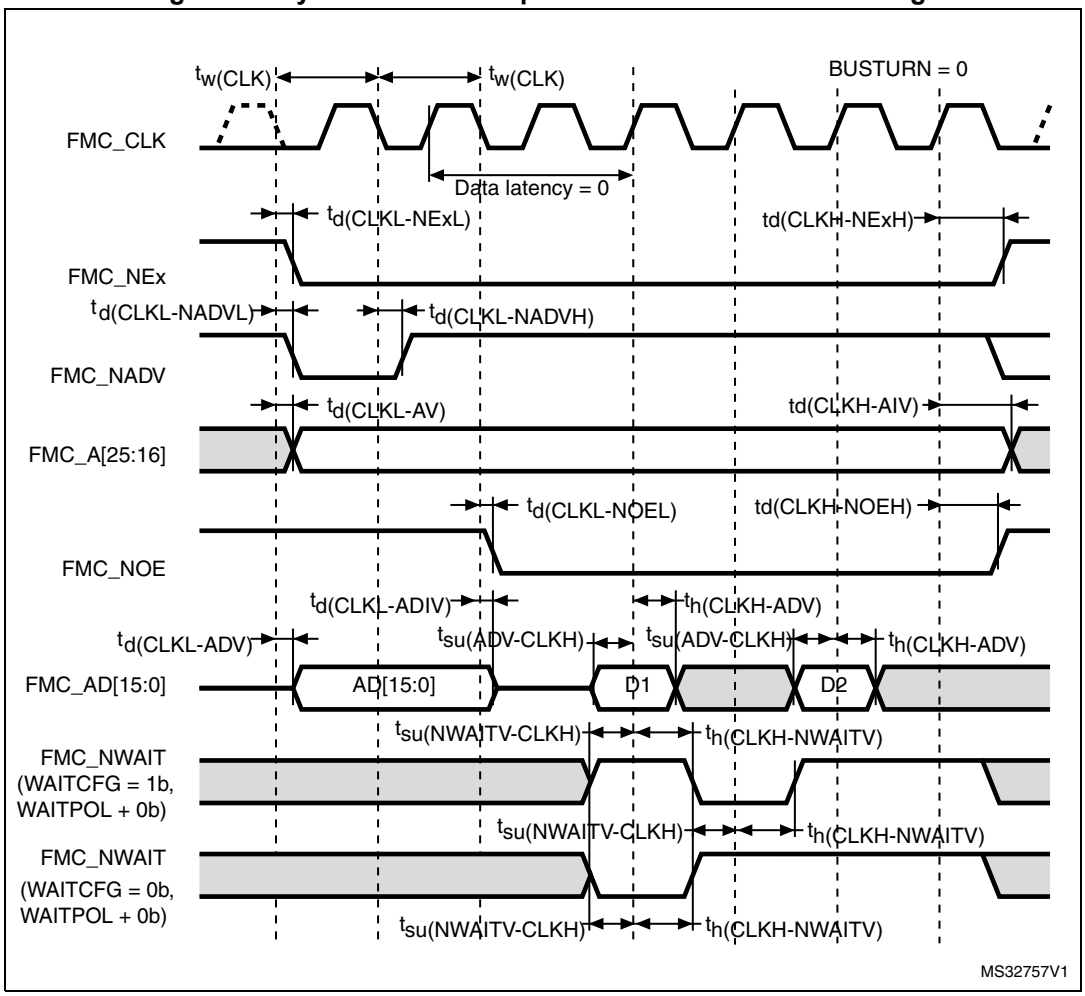

Table 53. Synchronous multiplexed NOR/PSRAM read timings(1)

Symbol	Parameter	Min	Max	Unit
$t_{w(CLK)}$	FMC_CLK period	2THCLK	-	ns
$t_{d(CLKL-NExL)}$	FMC_CLK low to FMC_NEx low (x=0..2)	-	5	
$t_{d(CLKH_NExH)}$	FMC_CLK high to FMC_NEx high (x= 0…2)	THCLK+1	-	
$t_{d(CLKL-NADVL)}$	FMC_CLK low to FMC_NADV low	-	7	
$t_{d(CLKL-NADVH)}$	FMC_CLK low to FMC_NADV high	2.5	-	
$t_{d(CLKL-AV)}$	FMC_CLK low to FMC_Ax valid (x=16…25)	-	3	
$t_{d(CLKH-AIV)}$	FMC_CLK high to FMC_Ax invalid (x=16…25)	0	-	
$t_{d(CLKL-NOEL)}$	FMC_CLK low to FMC_NOE low	-	6	
$t_{d(CLKH-NOEH)}$	FMC_CLK high to FMC_NOE high	THCLK+1	-	
$t_{d(CLKL-ADV)}$	FMC_CLK low to FMC_AD[15:0] valid	-	2	

Table 53. Synchronous multiplexed NOR/PSRAM read timings(1) (continued)

Symbol	Parameter	Min	Max	Unit
$t_{d(CLKL-ADIV)}$	FMC_CLK low to FMC_AD[15:0] invalid	0	-	ns
$t_{su(ADV-CLKH)}$	FMC_A/D[15:0] valid data before FMC_CLK high	4	-	
$t_{h(CLKH-ADV)}$	FMC_A/D[15:0] valid data after FMC_CLK high	6	-	
$t_{su(NWAIT-CLKH)}$	FMC_NWAIT valid before FMC_CLK high	3	-	
$t_{h(CLKH-NWAIT)}$	FMC_NWAIT valid after FMC_CLK high	4	-	

1. Based on characterization, not tested in production.

Figure 25. Synchronous multiplexed PSRAM write timings

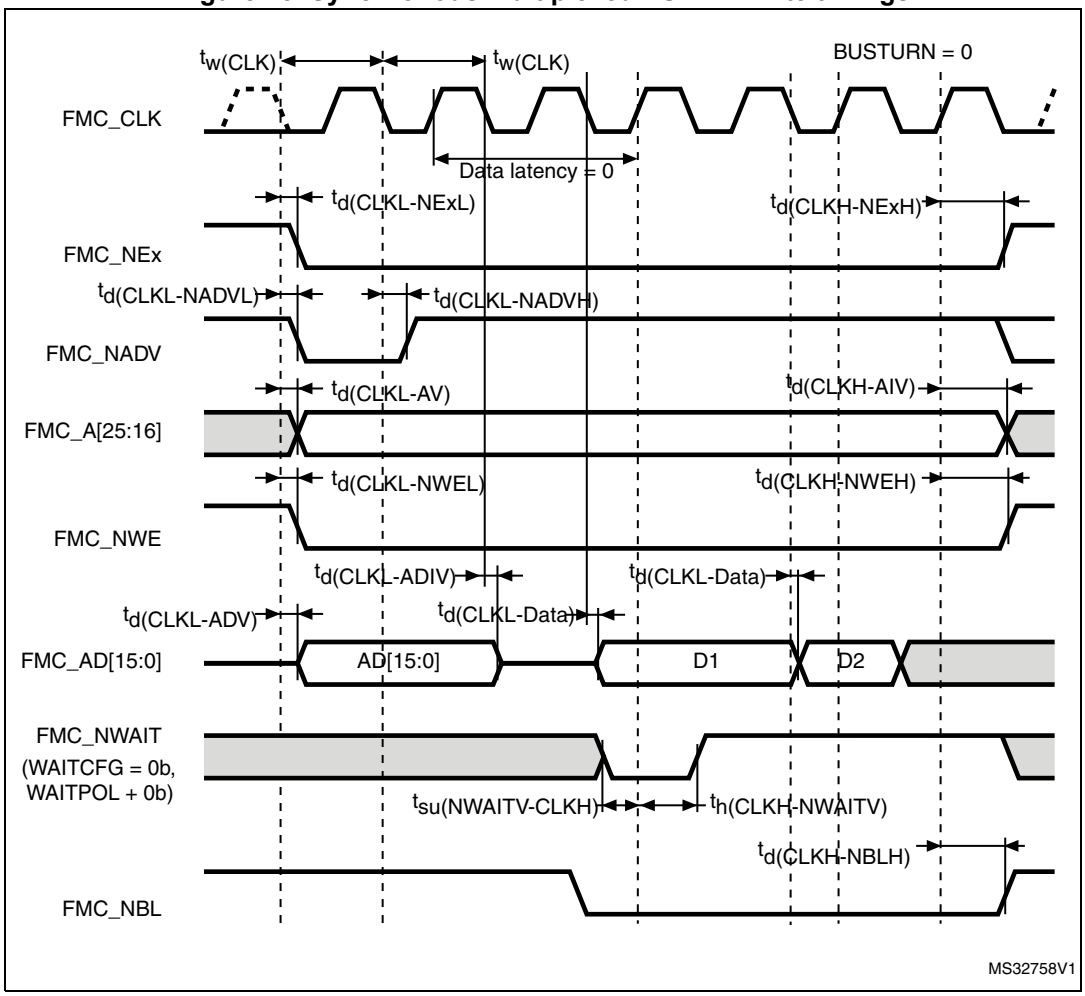

Table 54. Synchronous multiplexed PSRAM write timings(1) (2)

Symbol	Parameter	Min	Max	Unit
$t_{w(CLK)}$	FMC_CLK period, VDD range= 2.7 to 3.6 V	2THCLK-1	-	ns
$t_{d(CLKL-NExL)}$	FMC_CLK low to FMC_NEx low (x=0..2)	-	5.5	
$t_{d(CLKH-NExH)}$	FMC_CLK high to FMC_NEx high (x= 0…2)	THCLK+1	-	
$t_{d(CLKL-NADVL)}$	FMC_CLK low to FMC_NADV low	-	7	
$t_{d(CLKL-NADVH)}$	FMC_CLK low to FMC_NADV high	2	-	
$t_{d(CLKL-AV)}$	FMC_CLK low to FMC_Ax valid (x=16…25)	-	0	
$t_{d(CLKH-AIV)}$	FMC_CLK high to FMC_Ax invalid (x=16…25)	0	-	
$t_{d(CLKL-NWEL)}$	FMC_CLK low to FMC_NWE low	-	5.5	
$t_{d(CLKH-NWEH)}$	FMC_CLK high to FMC_NWE high	THCLK+1	-	
$t_{d(CLKL-ADV)}$	FMC_CLK low to FMC_AD[15:0] valid	-	7.5	
$t_{d(CLKL-ADIV)}$	FMC_CLK low to FMC_AD[15:0] invalid	0	-	
$t_{d(CLKL-DATA)}$	FMC_A/D[15:0] valid data after FMC_CLK low	-	8	
$t_{d(CLKL-NBLL)}$	FMC_CLK low to FMC_NBL low	-	6	
$t_{d(CLKH-NBLH)}$	FMC_CLK high to FMC_NBL high	THCLK+1	-	
$t_{su(NWAIT-CLKH)}$	FMC_NWAIT valid before FMC_CLK high	3	-	
$t_{h(CLKH-NWAIT)}$	FMC_NWAIT valid after FMC_CLK high	5	-	

1. Based on characterization, not tested in production.
2. C_L = 30 pF.

Figure 26. Synchronous non-multiplexed NOR/PSRAM read timings

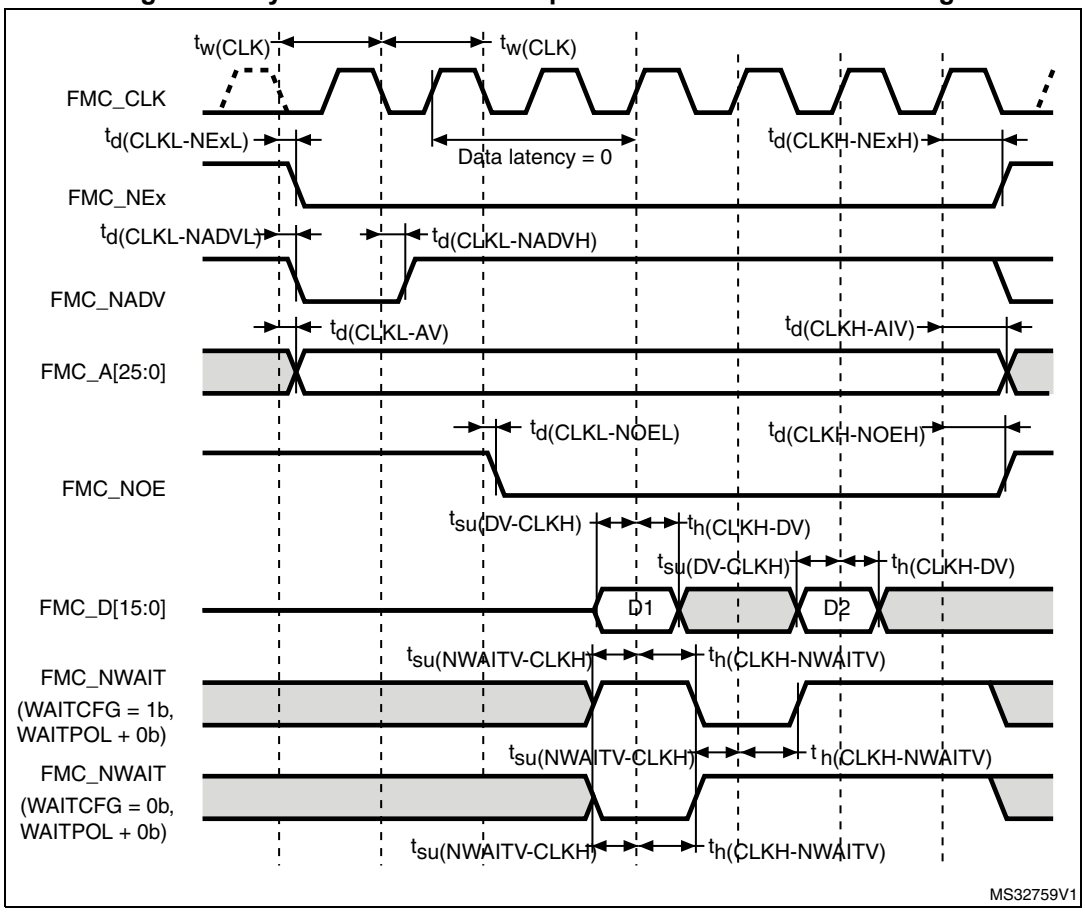

Table 55. Synchronous non-multiplexed NOR/PSRAM read timings(1)

Symbol	Parameter	Min	Max	Unit
$t_{w(CLK)}$	FMC_CLK period	2THCLK-1	-	ns
$t_{d(CLKL-NExL)}$	FMC_CLK low to FMC_NEx low (x=0..2)	-	5	
$t_{d(CLKH-NExH)}$	FMC_CLK high to FMC_NEx high (x= 0…2)	THCLK+1	-	
$t_{d(CLKL-NADVL)}$	FMC_CLK low to FMC_NADV low	-	7	
$t_{d(CLKL-NADVH)}$	FMC_CLK low to FMC_NADV high	2.5	-	
$t_{d(CLKL-AV)}$	FMC_CLK low to FMC_Ax valid (x=16…25)	-	7	
$t_{d(CLKH-AIV)}$	FMC_CLK high to FMC_Ax invalid (x=16…25)	THCLK	-	
$t_{d(CLKL-NOEL)}$	FMC_CLK low to FMC_NOE low	-	6	
$t_{d(CLKH-NOEH)}$	FMC_CLK high to FMC_NOE high	THCLK+1	-	
$t_{su(DV-CLKH)}$	FMC_D[15:0] valid data before FMC_CLK high	3.5	-	

Table 55. Synchronous non-multiplexed NOR/PSRAM read timings(1) (continued)

Symbol	Parameter	Min	Max	Unit
$t_{h(CLKH-DV)}$	FMC_D[15:0] valid data after FMC_CLK high	5	-	ns
$t_{su(NWAIT-CLKH)}$	FMC_NWAIT valid before FMC_CLK high	2	-	
$t_{h(CLKH-NWAIT)}$	FMC_NWAIT valid after FMC_CLK high	4	-	

1. Based on characterization, not tested in production.

Figure 27. Synchronous non-multiplexed PSRAM write timings

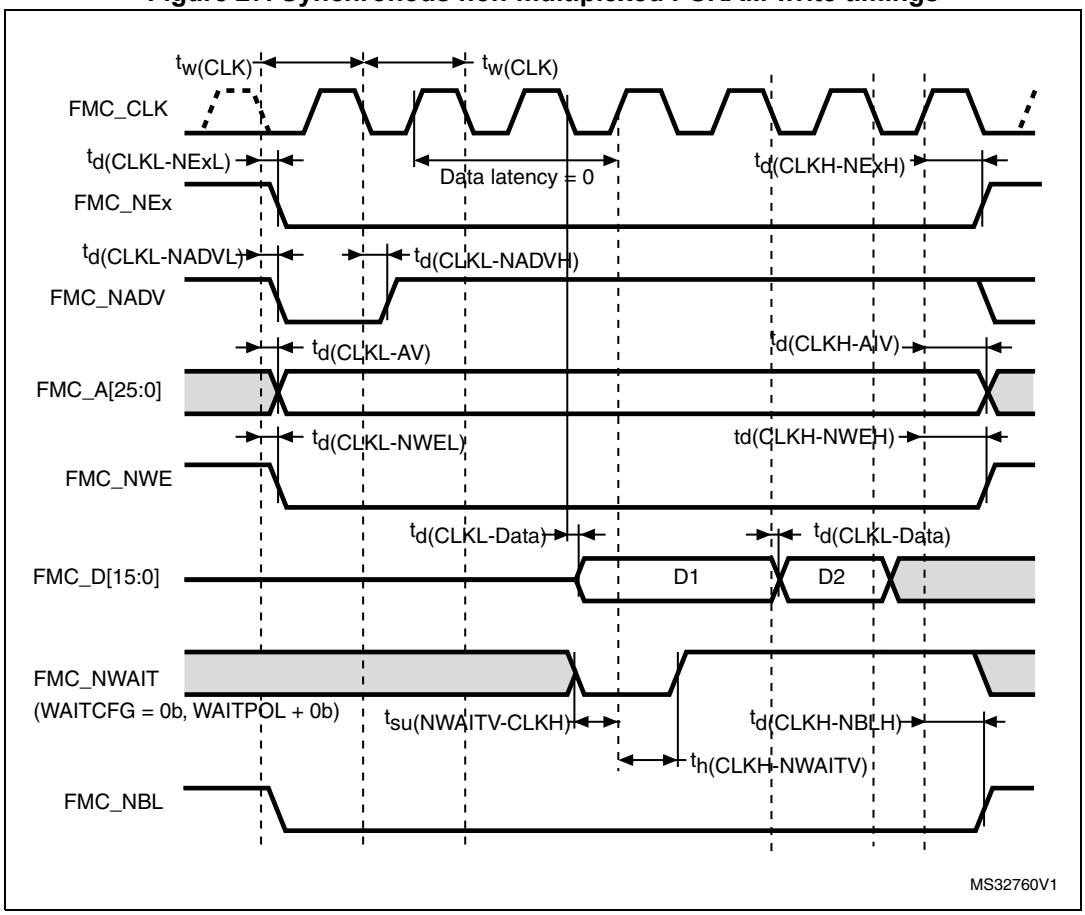

Table 56. Synchronous non-multiplexed PSRAM write timings(1)

Symbol	Parameter	Min	Max	Unit
$t_{w(CLK)}$	FMC_CLK period	2THCLK-1	-	ns
$t_{d(CLKL-NExL)}$	FMC_CLK low to FMC_NEx low (x=0..2)	-	6	
$t_{d(CLKH-NExH)}$	FMC_CLK high to FMC_NEx high (x= 0…2)	THCLK+1.5	-	
$t_{d(CLKL-NADVL)}$	FMC_CLK low to FMC_NADV low	-	7.5	
$t_{d(CLKL-NADVH)}$	FMC_CLK low to FMC_NADV high	0	-	
$t_{d(CLKL-AV)}$	FMC_CLK low to FMC_Ax valid (x=16…25)	-	6.5	
$t_{d(CLKH-AIV)}$	FMC_CLK high to FMC_Ax invalid (x=16…25)	0	-	
$t_{d(CLKL-NWEL)}$	FMC_CLK low to FMC_NWE low	-	0	
$t_{d(CLKH-NWEH)}$	FMC_CLK high to FMC_NWE high	THCLK+2	-	
$t_{d(CLKL-Data)}$	FMC_D[15:0] valid data after FMC_CLK low	-	7.5	
$t_{d(CLKL-NBLL)}$	FMC_CLK low to FMC_NBL low	-	7	
$t_{d(CLKH-NBLH)}$	FMC_CLK high to FMC_NBL high	THCLK+0.5	-	
$t_{su(NWAIT-CLKH)}$	FMC_NWAIT valid before FMC_CLK high	2	-	
$t_{h(CLKH-NWAIT)}$	FMC_NWAIT valid after FMC_CLK high	4	-	

1. Based on characterization, not tested in production.

PC Card/CompactFlash controller waveforms and timings

Figure 28 to *Figure 33* present the PC Card/Compact Flash controller waveforms, and *Table 57* to *Table 58* provide the corresponding timings. The results shown in this table are obtained with the following FSMC configuration:

- COM.FMC_SetupTime = 0x04;
- COM.FMC_WaitSetupTime = 0x07;
- COM.FMC_HoldSetupTime = 0x04;
- COM.FMC_HiZSetupTime = 0x05;
- ATT.FMC_SetupTime = 0x04;
- ATT.FMC_WaitSetupTime = 0x07;
- ATT.FMC_HoldSetupTime = 0x04;
- ATT.FMC_HiZSetupTime = 0x05;
- IO.FMC_SetupTime = 0x04;
- IO.FMC_WaitSetupTime = 0x07;
- IO.FMC_HoldSetupTime = 0x04;
- IO.FMC_HiZSetupTime = 0x05;
- TCLRSetupTime = 0;
- TARSetupTime = 0.

In all timing tables, the THCLK is the HCLK clock period.

Table 57. Switching characteristics for PC Card/CF read and write cycles in attribute/common space(1)

Symbol	Parameter	Min	Max	Unit
$t_{v(NCEx-A)}$	FMC_Ncex low to FMC_Ay valid	-	0	ns
$t_{h(NCEx_AI)}$	FMC_NCEx high to FMC_Ax invalid	2.5	-	
$t_{d(NREG-NCEx)}$	FMC_NCEx low to FMC_NREG valid	-	2	
$t_{h(NCEx-NREG)}$	FMC_NCEx high to FMC_NREG invalid	0	-	
$t_{d(NCEx-NWE)}$	FMC_NCEx low to FMC_NWE low	-	5THCLK+2	
$t_{w(NWE)}$	FMC_NWE low width	8THCLK	8THCLK+0.5	
$t_{d(NWE_NCEx)}$	FMC_NWE high to FMC_NCEx high	5THCLK-1	-	
$t_{v\ (NWE-D)}$	FMC_NWE low to FMC_D[15:0] valid	-	5	
$t_{h\ (NWE-D)}$	FMC_NWE high to FMC_D[15:0] invalid	4THCLK-1	-	
$t_{d\ (D-NWE)}$	FMC_D[15:0] valid before FMC_NWE high	13THCLK-3	-	
$t_{d(NCEx-NOE)}$	FMC_NCEx low to FMC_NOE low	-	5THCLK+2	
$t_{w(NOE)}$	FMC_NOE low width	8THCLK-1	8THCLK+2	
$t_{d(NOE_NCEx)}$	FMC_NOE high to FMC_NCEx high	5THCLK-1	-	
$t_{su\ (D-NOE)}$	FMC_D[15:0] valid data before FMC_NOE high	THCLK+2	-	
$t_{h(NOE-D)}$	FMC_N0E high to FMC_D[15:0] invalid	0	-	

1. Based on characterization, not tested in production.

Figure 28. PC Card/CompactFlash controller waveforms for common memory read access

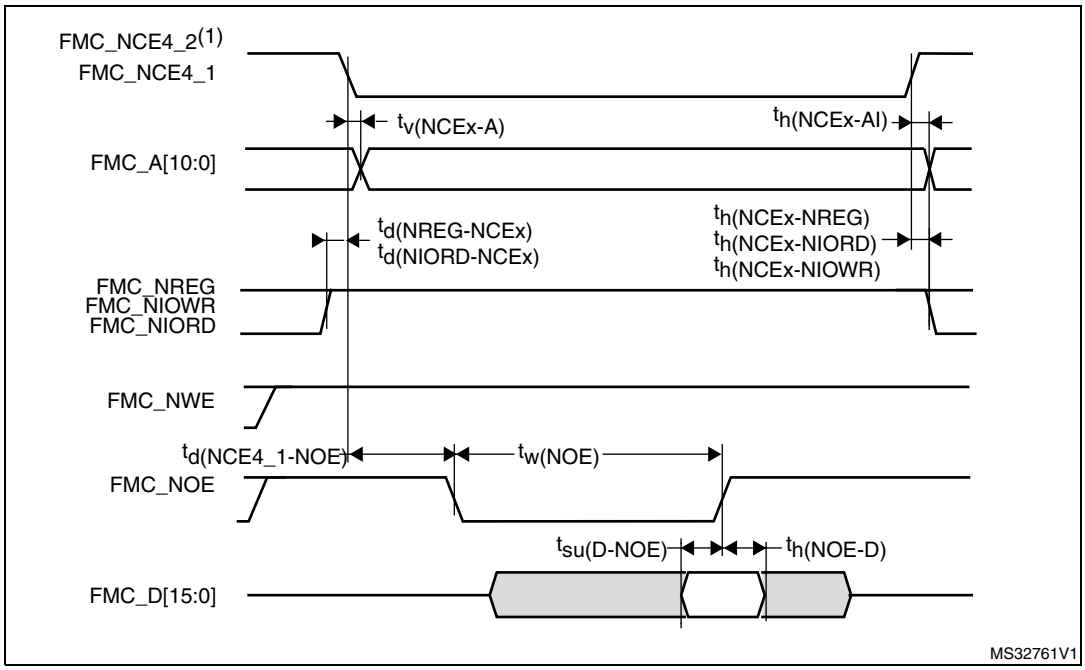

1. FMC_NCE4_2 remains high (inactive during 8-bit access.

Figure 29. PC Card/CompactFlash controller waveforms for common memory write access

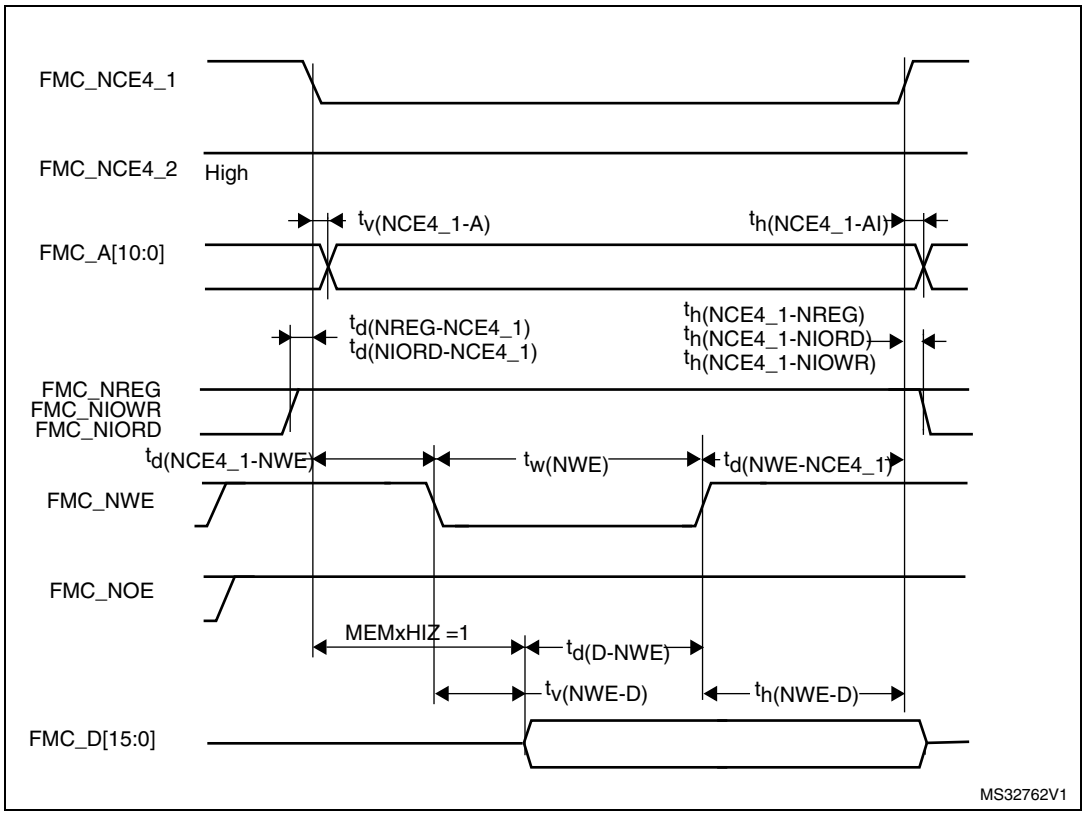

Figure 30. PC Card/CompactFlash controller waveforms for attribute memory read access

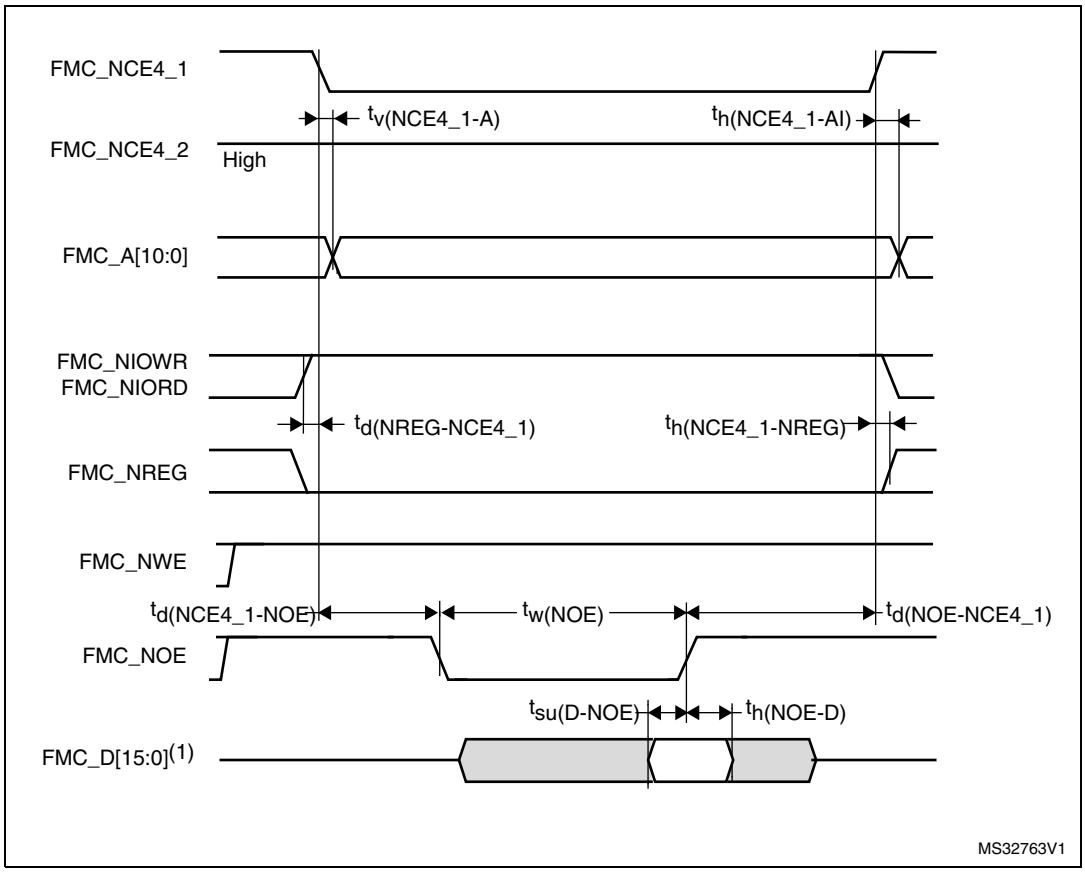

1. Only data bits 0...7 are read (bits 8...15 are disregarded).

Figure 31. PC Card/CompactFlash controller waveforms for attribute memory write access

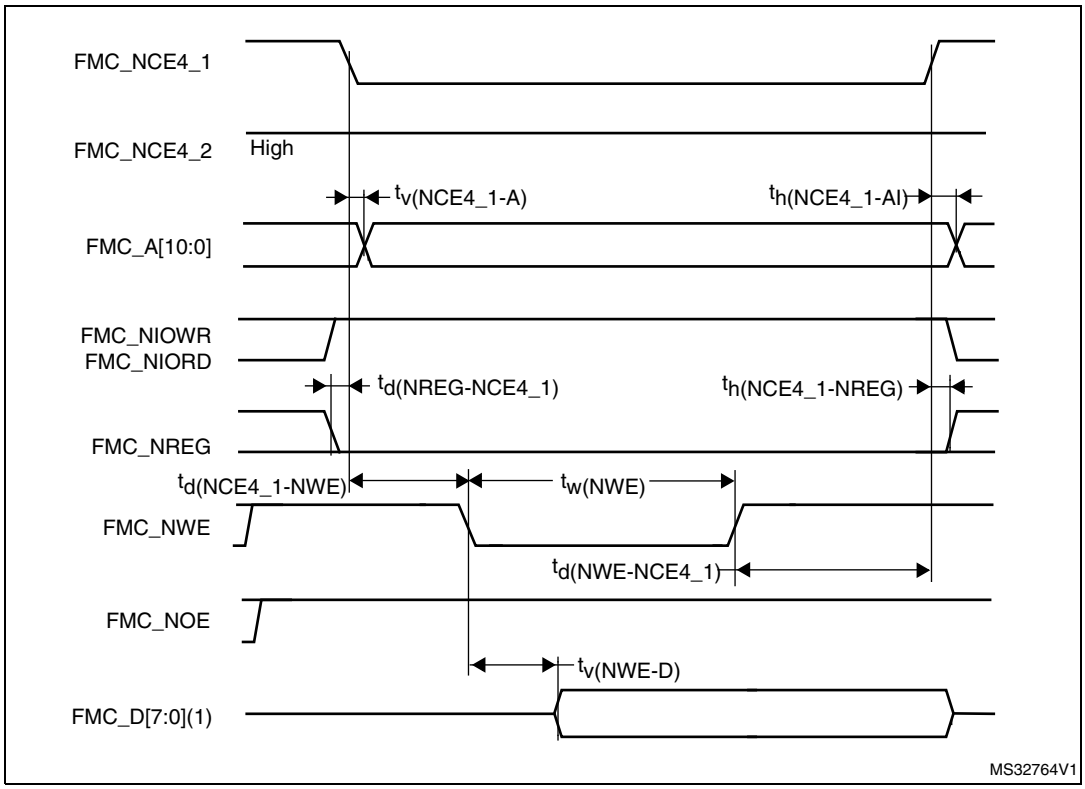

1. Only data bits 0...7 are driven (bits 8...15 remains Hi-Z).

Table 58. Switching characteristics for PC Card/CF read and write cycles in I/O space(1)

Symbol	Parameter	Min	Max	Unit
$t_{w(NIOWR)}$	FMC_NIOWR low width	8THCLK-0.5	-	ns
$t_{v(NIOWR-D)}$	FMC_NIOWR low to FMC_D[15:0] valid	-	5.5	
$t_{h(NIOWR-D)}$	FMC_NIOWR high to FMC_D[15:0] invalid	4THCLK-0.5	-	
$t_{d(NCE4_1-NIOWR)}$	FMC_NCE4_1 low to FMC_NIOWR valid	-	5THCLK+1	
$t_{h(NCEx-NIOWR)}$	FMC_NCEx high to FMC_NIOWR invalid	4THCLK+0.5	-	
$t_{d(NIORD-NCEx)}$	FMC_NCEx low to FMC_NIORD valid	-	5THCLK	
$t_{h(NCEx-NIORD)}$	FMC_NCEx high to FMC_NIORD) valid	6THCLK+2	-	
$t_{w(NIORD)}$	FMC_NIORD low width	8THCLK-1	8THCLK+1	
$t_{su(D-NIORD)}$	FMC_D[15:0] valid before FMC_NIORD high	THCLK+2	-	
$t_{d(NIORD-D)}$	FMC_D[15:0] valid after FMC_NIORD high	0	-	

1. Based on characterization, not tested in production.

Figure 32. PC Card/CompactFlash controller waveforms for I/O space read access

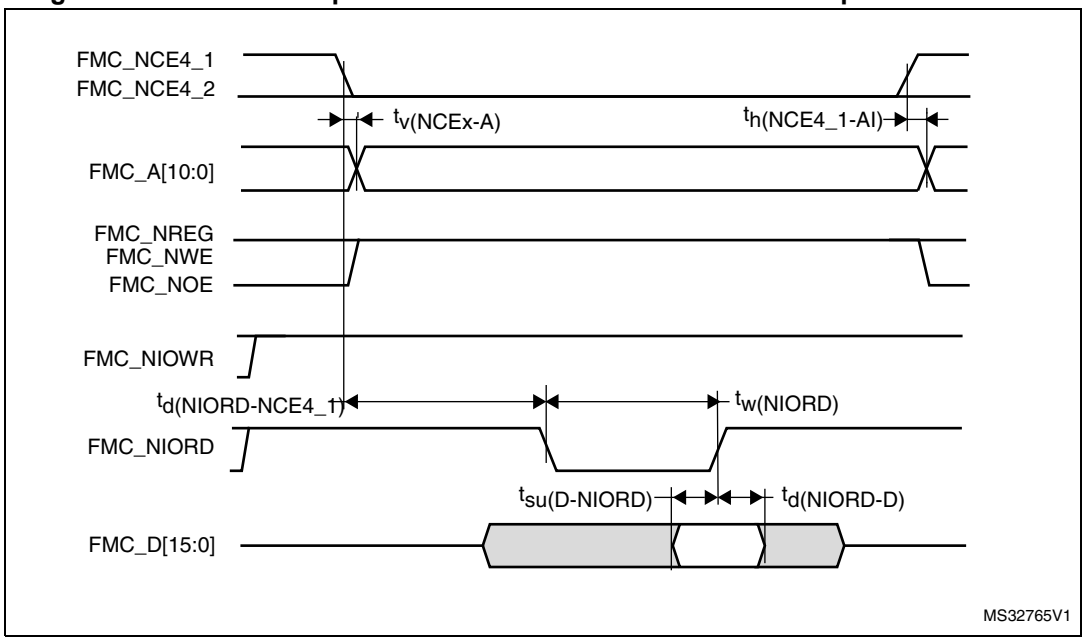

Figure 33. PC Card/CompactFlash controller waveforms for I/O space write access

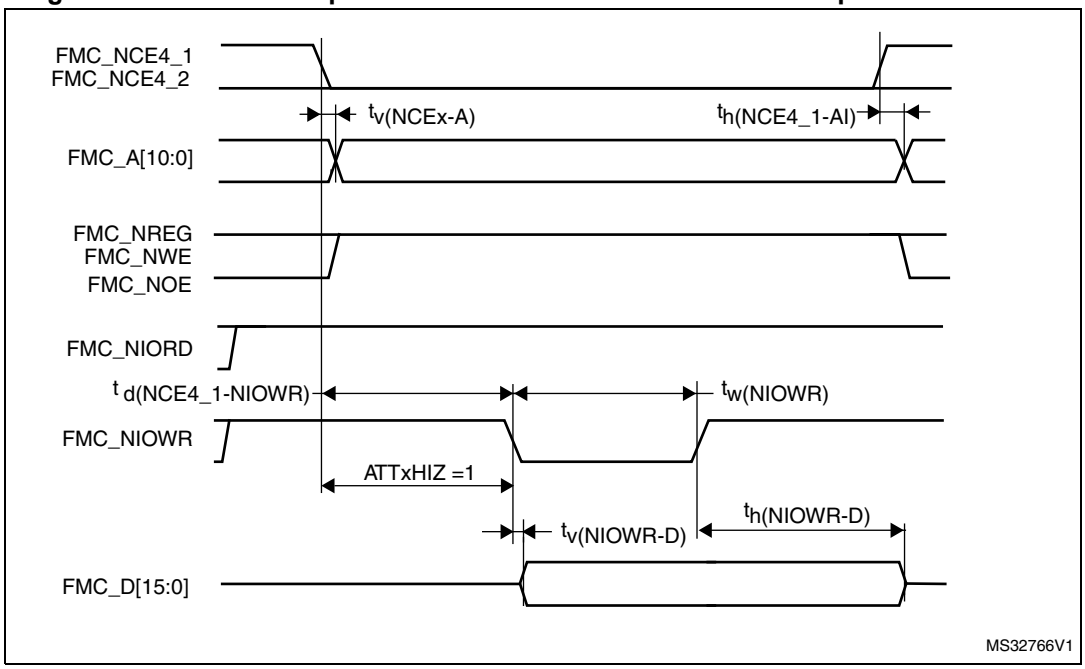

NAND controller waveforms and timings

Figure 34 and *Figure 35* present the NAND controller synchronous waveforms, and *Table 59* and *Table 60* provide the corresponding timings. The results shown in this table are obtained with the following FSMC configuration:

- COM.FMC_SetupTime = 0x01;
- COM.FMC_WaitSetupTime = 0x03;
- COM.FMC_HoldSetupTime = 0x02;
- COM.FMC_HiZSetupTime = 0x03;
- ATT.FMC_SetupTime = 0x01;
- ATT.FMC_WaitSetupTime = 0x03;
- ATT.FMC_HoldSetupTime = 0x02;
- ATT.FMC_HiZSetupTime = 0x03;
- Bank = FMC_Bank_NAND;
- MemoryDataWidth = FMC_MemoryDataWidth_16b;
- ECC = FMC_ECC_Enable;
- ECCPageSize = FMC_ECCPageSize_512Bytes;
- TCLRSetupTime = 0;
- TARSetupTime = 0.

In all timing tables, the THCLK is the HCLK clock period.

Figure 34. NAND controller read timings

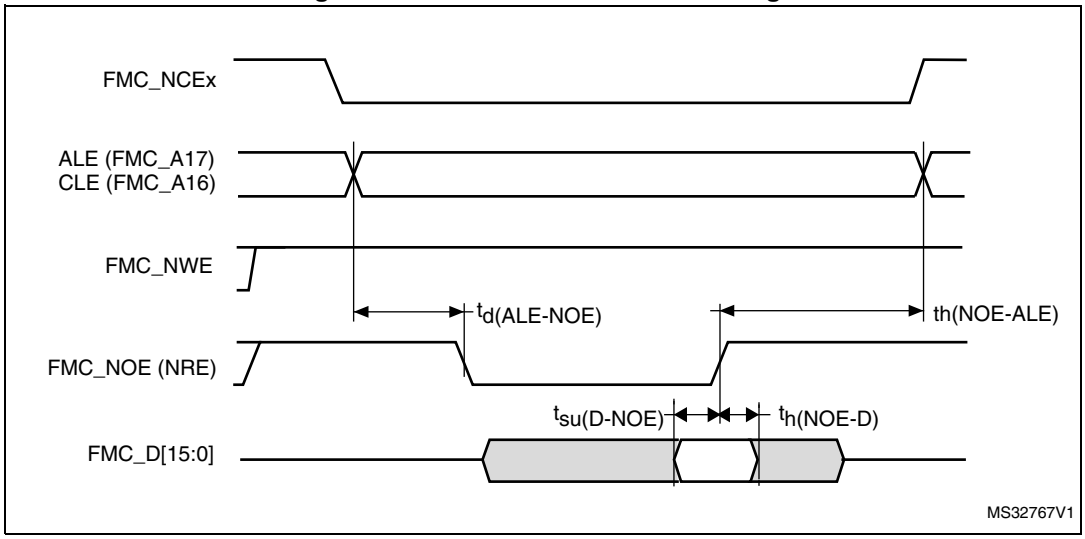

Table 59. Switching characteristics for NAND Flash read cycles(1) (2)

Symbol	Parameter	Min	Max	Unit
$t_{w(NOE)}$	FMC_NOE low width	6THCLK	6THCLK + 2	ns
$t_{su(D-NOE)}$	FMC_D[15-0] valid data before FMC_NOE high	THCLK+5	-	
$t_{h(NOE-D)}$	FMC_D[15-0] valid data after FMC_NOE high	0	-	
$t_{d(ALE-NOE)}$	FMC_ALE valid before FMC_NOE low	-	6THCLK -0.5	
$t_{h(NOE-ALE)}$	FMC_NWE high to FMC_ALE invalid	6THCLK-1	-	

1. Based on characterization, not tested in production.
2. CL = 30 pF

Figure 35. NAND controller write timings

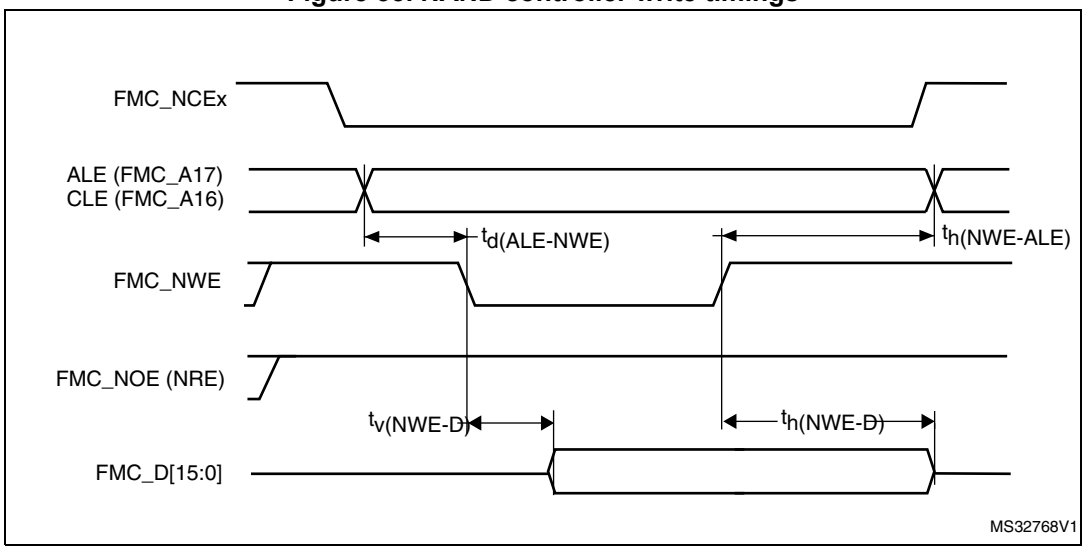

Table 60. Switching characteristics for NAND Flash write cycles(1)

Symbol	Parameter	Min	Max	Unit
$t_{w(NWE)}$	FMC_NWE low width	4THCLK-0.5	4THCLK + 1.5	ns
$t_{v(NWE-D)}$	FMC_NWE low to FMC_D[15-0] valid	-	3.5	
$t_{h(NWE-D)}$	FMC_NWE high to FMC_D[15-0] invalid	3THCLK -1.5	-	
$t_{d(D-NWE)}$	FMC_D[15-0] valid before FMC_NWE high	5THCLK – 3	-	
$t_{d(ALE_NWE)}$	FMC_ALE valid before FMC_NWE low	-	4THCLK+2	
$t_{h(NWE-ALE)}$	FMC_NWE high to FMC_ALE invalid	2THCLK-1	-	

1. Based on characterization, not tested in production.

6.3.12 EMC characteristics

Susceptibility tests are performed on a sample basis during device characterization.

Functional EMS (electromagnetic susceptibility)

While a simple application is executed on the device (toggling two LEDs through I/O ports), the device is stressed by two electromagnetic events until a failure occurs. The failure is indicated by the LEDs:

- **Electrostatic discharge (ESD)** (positive and negative) is applied to all device pins until a functional disturbance occurs. This test is compliant with the IEC 61000-4-2 standard.
- **FTB**: A Burst of Fast Transient voltage (positive and negative) is applied to V_{DD} and V_{SS} through a 100 pF capacitor, until a functional disturbance occurs. This test is compliant with the IEC 61000-4-4 standard.

A device reset allows normal operations to be resumed.

The test results are given in *Table 61*. They are based on the EMS levels and classes defined in application note AN1709.

Table 61. EMS characteristics

Symbol	Parameter	Conditions	Level/ Class
V_{FESD}	Voltage limits to be applied on any I/O pin to induce a functional disturbance	V_{DD} = 3.3 V, LQFP144, T_A = +25°C, f_{HCLK} = 72 MHz conforms to IEC 61000-4-2	2B
V_{EFTB}	Fast transient voltage burst limits to be applied through 100 pF on V_{DD} and V_{SS} pins to induce a functional disturbance	V_{DD} = 3.3 V, LQFP144, T_A = +25°C, f_{HCLK} = 72 MHz conforms to IEC 61000-4-4	4A

Designing hardened software to avoid noise problems

EMC characterization and optimization are performed at component level with a typical application environment and simplified MCU software. It should be noted that good EMC performance is highly dependent on the user application and the software in particular.

Therefore it is recommended that the user applies EMC software optimization and pre qualification tests in relation with the EMC level requested for his application.

Software recommendations

The software flowchart must include the management of runaway conditions such as:

- Corrupted program counter
- Unexpected reset
- Critical Data corruption (control registers...)

Pre qualification trials

Most of the common failures (unexpected reset and program counter corruption) can be reproduced by manually forcing a low state on the NRST pin or the Oscillator pins for 1 second.

To complete these trials, ESD stress can be applied directly on the device, over the range of specification values. When unexpected behavior is detected, the software can be hardened to prevent unrecoverable errors occurring (see application note AN1015).

Electromagnetic Interference (EMI)

The electromagnetic field emitted by the device are monitored while a simple application is executed (toggling 2 LEDs through the I/O ports). This emission test is compliant with IEC 61967-2 standard which specifies the test board and the pin loading.

Table 62. EMI characteristics

Symbol	Parameter	Conditions	Monitored frequency band	Max vs. [f_{HSE}/f_{HCLK}]	Unit
				8/72 MHz	
S_{EMI}	Peak level	V_{DD} = 3.6 V, T_A = 25 °C, LQFP144 package compliant with IEC 61967-2	0.1 to 30 MHz	7	dBµV
			30 to 130 MHz	15	
			130 MHz to 1GHz	31	
			SAE EMI Level	4	-

6.3.13 Electrical sensitivity characteristics

Based on three different tests (ESD, LU) using specific measurement methods, the device is stressed to determine its performance in terms of electrical sensitivity.

Electrostatic discharge (ESD)

Electrostatic discharges (a positive then a negative pulse separated by 1 second) are applied to the pins of each sample according to each pin combination. The sample size depends on the number of supply pins in the device (3 parts × (n+1) supply pins). This test conforms to the ANSI/JEDEC standard.

Table 63. ESD absolute maximum ratings

Symbol	Ratings	Conditions	Class	Maximum value(1)	Unit
$V_{ESD(HBM)}$	Electrostatic discharge voltage (human body model)	T_A = +25 °C, conforming to ANSI/JEDEC JS-001	2	2000	V
$V_{ESD(CDM)}$	Electrostatic discharge voltage (charge device model)	T_A = +25 °C, conforming to ANSI/ESD STM5.3.1	C3	250	

1. Data based on characterization results, not tested in production.

Static latch-up

Two complementary static tests are required on six parts to assess the latch-up performance:

- A supply overvoltage is applied to each power supply pin
- A current injection is applied to each input, output and configurable I/O pin

These tests are compliant with EIA/JESD 78A IC latch-up standard.

Table 64. Electrical sensitivities

Symbol	Parameter	Conditions	Class
LU	Static latch-up class	T_A = +105 °C conforming to JESD78A	II Level A

6.3.14 I/O current injection characteristics

As a general rule, current injection to the I/O pins, due to external voltage below V_{SS} or above V_{DD} (for standard, 3 V-capable I/O pins) should be avoided during normal product operation. However, to give an indication of the robustness of the microcontroller in cases when abnormal injection accidentally happens, susceptibility tests are performed on a sample basis during device characterization.

Functional susceptibility to I/O current injection

While a simple application is executed on the device, the device is stressed by injecting current into the I/O pins programmed in floating input mode. While current is injected into the I/O pin, one at a time, the device is checked for functional failures.

The failure is indicated by an out of range parameter: ADC error above a certain limit (higher than 5 LSB TUE), out of conventional limits of induced leakage current on adjacent pins (out of –5 µA/+0 µA range), or other functional failure (for example reset occurrence or oscillator frequency deviation).

The test results are given in *Table 65*.

Table 65. I/O current injection susceptibility

Symbol	Description	Functional susceptibility		Unit
		Negative injection	Positive injection	
I_{INJ}	Injected current on BOOT0	-0	NA	mA
	Injected current on PF3, PC1, PC2, PA1, PA2, PA3, PA4, PA5, PA6, PA7, PB0, PB1, PE8, PE9, PE10, PE11, PE12, PE13, PE14, PE15, PB13, PB14, PB15, PD8, PD9, PD10, PD11, PD12, PD13, PD14 pins with induced leakage current on adjacent pins less than -50 µA or more than +400 µA	-5	+5	
	Injected current on PF2, PF4, PC0, PC1, PC2, PC3, PA0, PA1, PA2, PA3, PA4, PA5, PA6, PA7, PC4, PC5, PB2, PB11 with induced leakage current on other pins from this group less than -50 µA or more than +400 µA	-5	+5	

Table 65. I/O current injection susceptibility (continued)

Symbol	Description	Functional susceptibility		Unit
		Negative injection	Positive injection	
I_{INJ}	Injected current on PB0, PB1, PE7, PE8, PE9, PE10, PE11, PE12, PE13, PE14, PE15, PB12, PB13, PB14, P15, PD8, PD9, PD10, PD11, PD12, PD13, PD14 with induced leakage current on other pins from this group less than -50 µA or more than +400 µA	-5	+5	mA
	Injected current on any other FT and FTf pins	-5	NA	
	Injected current on any other pins	-5	+5	

Note: It is recommended to add a Schottky diode (pin to ground) to analog pins which may potentially inject negative currents.

6.3.15 I/O port characteristics

General input/output characteristics

Unless otherwise specified, the parameters given in *Table 66* are derived from tests performed under the conditions summarized in *Table 19*. All I/Os are CMOS and TTL compliant.

Table 66. I/O static characteristics

Symbol	Parameter	Conditions	Min	Typ	Max	Unit
V_{IL}	Low level input voltage	TC and TTa I/O	-	-	$0.3\ V_{DD}+0.07$ (1)	V
		FT and FTf I/O	-	-	$0.475\ V_{DD}-0.2$ (1)	
		BOOT0	-	-	$0.3\ V_{DD}–0.3$ (1)	
		All I/Os except BOOT0	-	-	$0.3\ V_{DD}$ (2)	
V_{IH}	High level input voltage	TC and TTa I/O	$0.445\ V_{DD}+0.398$ (1)	-	-	V
		FT and FTf I/O	$0.5\ V_{DD}+0.2$ (1)	-	-	
		BOOT0	$0.2\ V_{DD}+0.95$ (1)	-	-	
		All I/Os except BOOT0	$0.7\ V_{DD}$ (2)	-	-	
V_{hys}	Schmitt trigger hysteresis	TC and TTa I/O	-	200 (1)	-	mV
		FT and FTf I/O	-	100 (1)	-	
		BOOT0	-	300 (1)	-	

Table 66. I/O static characteristics (continued)

Symbol	Parameter	Conditions	Min	Typ	Max	Unit
I_{lkg}	Input leakage current (3)	TC, FT and FTf I/O TTa I/O in digital mode $V_{SS} \leq V_{IN} \leq V_{DD}$	-	-	±0.1	µA
		TTa I/O in digital mode $V_{DD} \leq V_{IN} \leq V_{DDA}$	-	-	1	
		TTa I/O in analog mode $V_{SS} \leq V_{IN} \leq V_{DDA}$	-	-	±0.2	
		FT and FTf I/O(4) $V_{DD} \leq V_{IN} \leq 5$ V	-	-	10	
R_{PU}	Weak pull-up equivalent resistor(5)	$V_{IN} = V_{SS}$	25	40	55	kΩ
R_{PD}	Weak pull-down equivalent resistor(5)	$V_{IN} = V_{DD}$	25	40	55	kΩ
C_{IO}	I/O pin capacitance	-	-	5	-	pF

1. Data based on design simulation.
2. Tested in production.
3. Leakage could be higher than the maximum value, if negative current is injected on adjacent pins. Refer to *Table 65: I/O current injection susceptibility*.
4. To sustain a voltage higher than V_{DD} +0.3 V, the internal pull-up/pull-down resistors must be disabled.
5. Pull-up and pull-down resistors are designed with a true resistance in series with a switchable PMOS/NMOS. This PMOS/NMOS contribution to the series resistance is minimum (~10% order).

All I/Os are CMOS and TTL compliant (no software configuration required). Their characteristics cover more than the strict CMOS-technology or TTL parameters. The coverage of these requirements is shown in *Figure 36* and *Figure 37* for standard I/Os.

Figure 36. TC and TTa I/O input characteristics - CMOS port

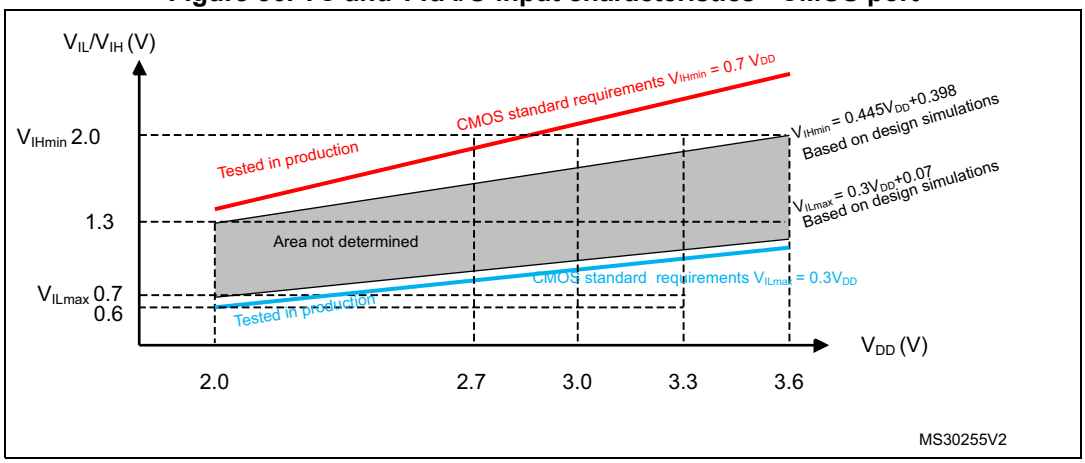

Figure 37. TC and TTa I/O input characteristics - TTL port

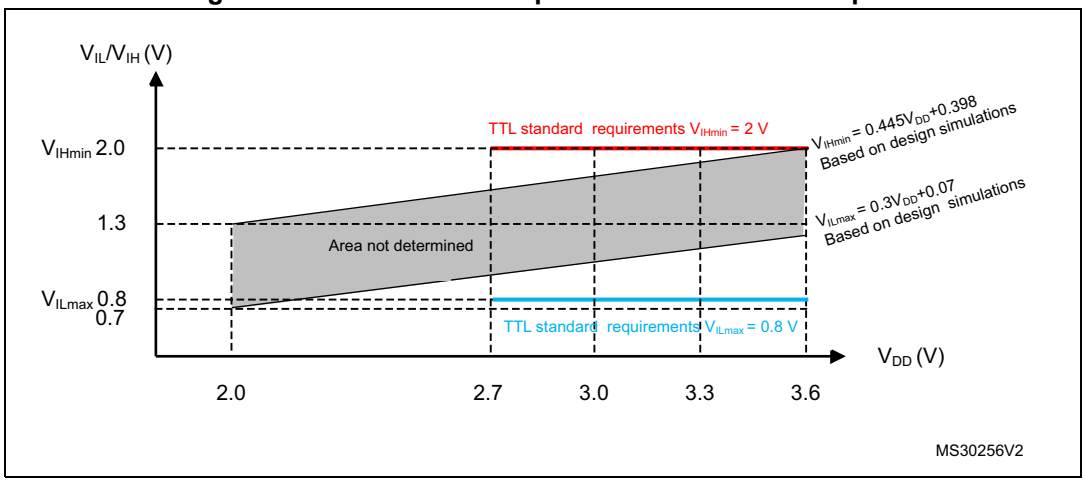

Figure 38. Five volt tolerant (FT and FTf) I/O input characteristics - CMOS port

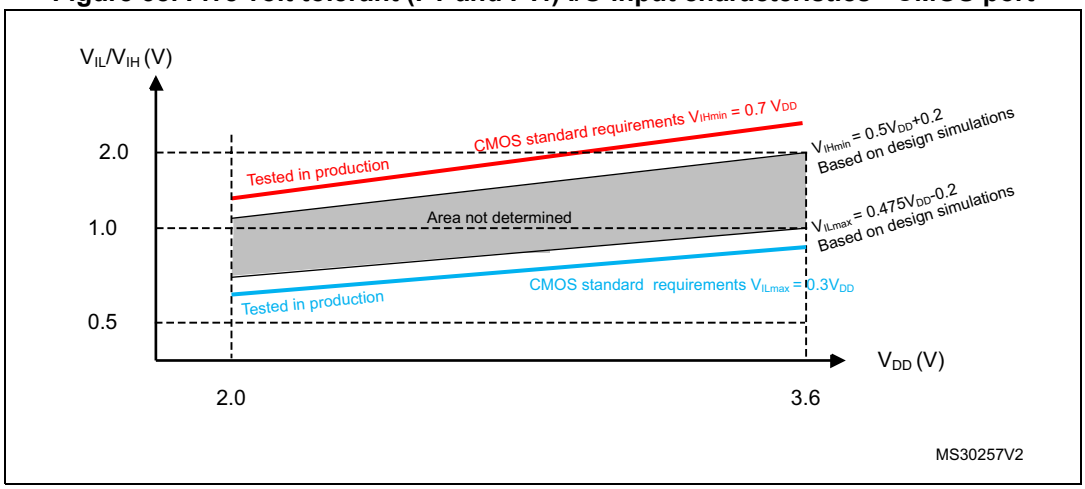

Figure 39. Five volt tolerant (FT and FTf) I/O input characteristics - TTL port

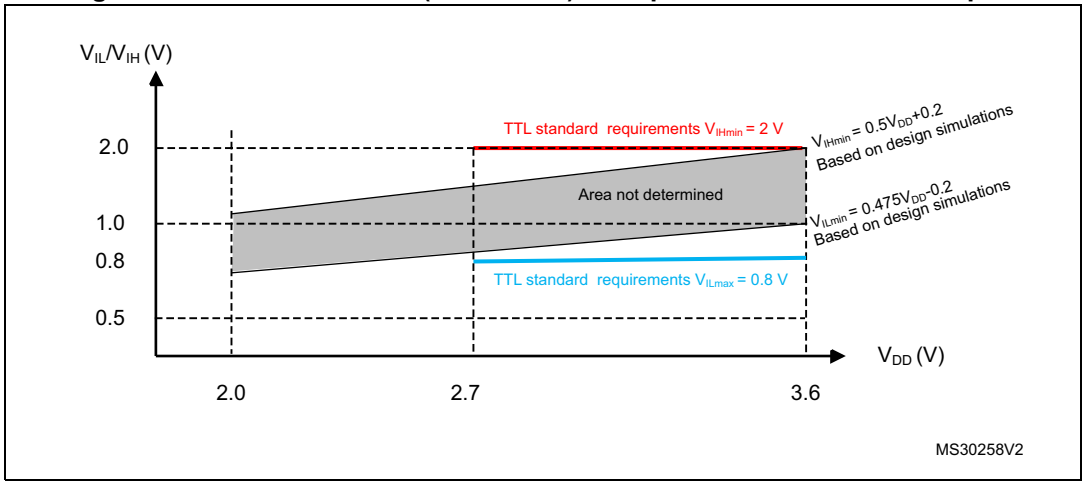

Output driving current

The GPIOs (general purpose input/outputs) can sink or source up to +/-8 mA, and sink or source up to +/- 20 mA (with a relaxed V_{OL}/V_{OH}).

In the user application, the number of I/O pins which can drive current must be limited to respect the absolute maximum rating specified in *Section 6.2*:

- The sum of the currents sourced by all the I/Os on $V_{DD,}$ plus the maximum Run consumption of the MCU sourced on $V_{DD,}$ cannot exceed the absolute maximum rating ΣI_{VDD} (see *Table 17*).
- The sum of the currents sunk by all the I/Os on V_{SS} plus the maximum Run consumption of the MCU sunk on V_{SS} cannot exceed the absolute maximum rating ΣI_{VSS} (see *Table 17*).

Output voltage levels

Unless otherwise specified, the parameters given in *Table 67* are derived from tests performed under ambient temperature and V_{DD} supply voltage conditions summarized in *Table 19*. All I/Os (FT, TTa and TC unless otherwise specified) are CMOS and TTL compliant.

Table 67. Output voltage characteristics

Symbol	Parameter	Conditions	Min	Max	Unit
V_{OL}(1)	Output low level voltage for an I/O pin	CMOS port(2) I_{IO} = +48 mA 2.7 V < V_{DD} < 3.6 V	-	0.4	V
V_{OH}(3)	Output high level voltage for an I/O pin		V_{DD}–0.4	-	
V_{OL} (1)	Output low level voltage for an I/O pin	TTL port(2) I_{IO} = +8 mA 2.7 V < V_{DD} < 3.6 V	-	0.4	
V_{OH} (3)	Output high level voltage for an I/O pin		2.4	-	
V_{OL}(1)(4)	Output low level voltage for an I/O pin	I_{IO} = +20 mA 2.7 V < V_{DD} < 3.6 V	-	1.3	
V_{OH}(3)(4)	Output high level voltage for an I/O pin		V_{DD}–1.3	-	
V_{OL}(1)(4)	Output low level voltage for an I/O pin	I_{IO} = +6 mA 2 V < V_{DD} < 2.7 V	-	0.4	
V_{OH}(3)(4)	Output high level voltage for an I/O pin		V_{DD}–0.4	-	
V_{OLFM+}(4)(4)	Output low level voltage for an FTf I/O pin in FM+ mode	I_{IO} = +20 mA 2.7 V < V_{DD} < 3.6 V	-	0.4	

1. The I_{IO} current sunk by the device must always respect the absolute maximum rating specified in *Table 17* and the sum of I_{IO} (I/O ports and control pins) must not exceed $\Sigma I_{IO(PIN)}$.
2. TTL and CMOS outputs are compatible with JEDEC standards JESD36 and JESD52.
3. The I_{IO} current sourced by the device must always respect the absolute maximum rating specified in *Table 17* and the sum of I_{IO} (I/O ports and control pins) must not exceed $\Sigma I_{IO(PIN)}$.
4. Data based on design simulation.

Input/output AC characteristics

The definition and values of input/output AC characteristics are given in *Figure 40* and *Table 68*, respectively.

Unless otherwise specified, the parameters given are derived from tests performed under ambient temperature and V_{DD} supply voltage conditions summarized in *Table 19*.

Table 68. I/O AC characteristics(1)

OSPEEDRy [1:0] value(1)	Symbol	Parameter	Conditions	Min	Max	Unit
x0	$f_{max(IO)out}$	Maximum frequency(2)	C_L = 50 pF, V_{DD} = 2 V to 3.6 V	-	2(3)	MHz
	$t_{f(IO)out}$	Output high to low level fall time	C_L = 50 pF, V_{DD} = 2 V to 3.6 V	-	125(3)	ns
	$t_{r(IO)out}$	Output low to high level rise time		-	125(3)	
01	$f_{max(IO)out}$	Maximum frequency(2)	C_L = 50 pF, V_{DD} = 2 V to 3.6 V	-	10(3)	MHz
	$t_{f(IO)out}$	Output high to low level fall time	C_L = 50 pF, V_{DD} = 2 V to 3.6 V	-	25(3)	ns
	$t_{r(IO)out}$	Output low to high level rise time		-	25(3)	
11	$f_{max(IO)out}$	Maximum frequency(2)	C_L = 30 pF, V_{DD} = 2.7 V to 3.6 V	-	50(3)	MHz
			C_L = 50 pF, V_{DD} = 2.7 V to 3.6 V	-	30(3)	
			C_L = 50 pF, V_{DD} = 2 V to 2.7 V	-	20(3)	
	$t_{f(IO)out}$	Output high to low level fall time	C_L = 30 pF, V_{DD} = 2.7 V to 3.6 V	-	5(3)	ns
			C_L = 50 pF, V_{DD} = 2.7 V to 3.6 V	-	8(3)	
			C_L = 50 pF, V_{DD} = 2 V to 2.7 V	-	12(3)	
	$t_{r(IO)out}$	Output low to high level rise time	C_L = 30 pF, V_{DD} = 2.7 V to 3.6 V	-	5(3)	
			C_L = 50 pF, V_{DD} = 2.7 V to 3.6 V	-	8(3)	
			C_L = 50 pF, V_{DD} = 2 V to 2.7 V	-	12(3)	
FM+ configuration(4)	$f_{max(IO)out}$	Maximum frequency(2)	C_L = 50 pF, V_{DD} = 2 to 3.6 V	-	2(4)	MHz
	$t_{f(IO)out}$	Output high to low level fall time		-	12(4)	ns
	$t_{r(IO)out}$	Output low to high level rise time		-	34(4)	
-	t_{EXTIpw}	Pulse width of external signals detected by the EXTI controller	-	10(3)	-	ns

1. The I/O speed is configured using the OSPEEDRx[1:0] bits. Refer to the RM0316 reference manual for a description of GPIO Port configuration register.
2. The maximum frequency is defined in *Figure 40*.
3. Guaranteed by design, not tested in production.
4. The I/O speed configuration is bypassed in FM+ I/O mode. Refer to the reference manual RM0316 for a description of FM+ I/O mode configuration.

Figure 40. I/O AC characteristics definition

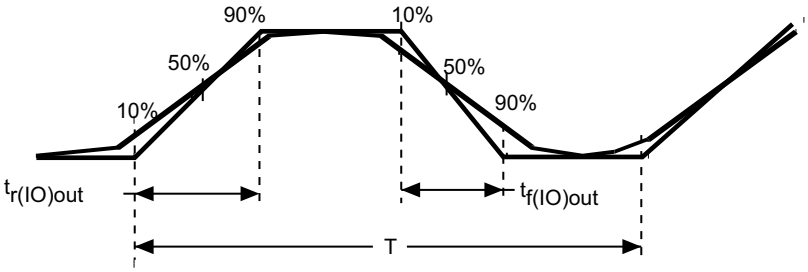

Maximum frequency is achieved if $(t_r + t_f) \leq 2/3)T$ and if the duty cycle is (45-55%) when loaded by C_L[1]

MS36445V1

1. See *Table 68: I/O AC characteristics*.

6.3.16 NRST pin characteristics

The NRST pin input driver uses CMOS technology. It is connected to a permanent pull-up resistor, R_{PU} (see *Table 66*).

Unless otherwise specified, the parameters given in *Table 69* are derived from tests performed under ambient temperature and V_{DD} supply voltage conditions summarized in *Table 19*.

Table 69. NRST pin characteristics

Symbol	Parameter	Conditions	Min	Typ	Max	Unit
$V_{IL(NRST)}$[1]	NRST Input low level voltage	-	-	-	$0.3V_{DD}+0.07$[1]	V
$V_{IH(NRST)}$[1]	NRST Input high level voltage	-	$0.445V_{DD}+0.398$[1]	-	-	
$V_{hys(NRST)}$	NRST Schmitt trigger voltage hysteresis	-	-	200	-	mV
R_{PU}	Weak pull-up equivalent resistor[2]	$V_{IN} = V_{SS}$	25	40	55	kΩ
$V_{F(NRST)}$[1]	NRST Input filtered pulse	-	-	-	100[1]	ns
$V_{NF(NRST)}$[1]	NRST Input not filtered pulse	-	500[1]	-	-	ns

1. Guaranteed by design, not tested in production.
2. The pull-up is designed with a true resistance in series with a switchable PMOS. This PMOS contribution to the series resistance must be minimum (~10% order).

Figure 41. Recommended NRST pin protection

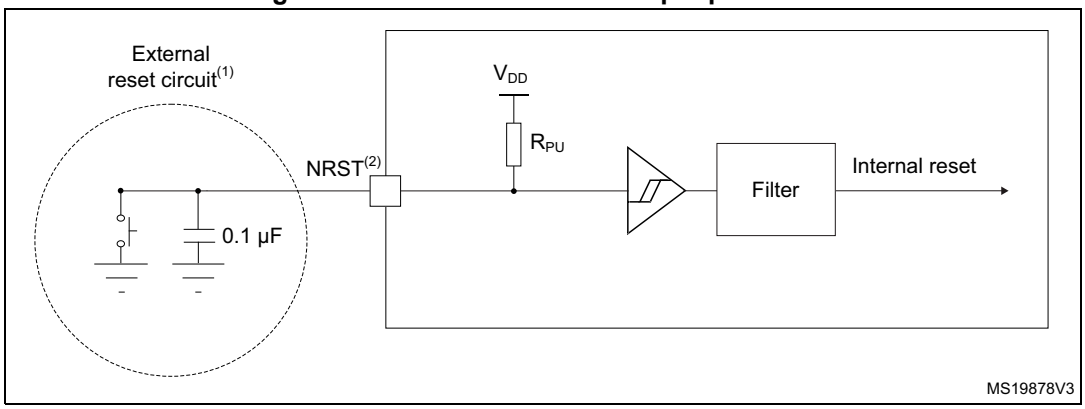

1. The reset network protects the device against parasitic resets.
2. The user must ensure that the level on the NRST pin can go below the $V_{IL(NRST)}$ max level specified in *Table 69*. Otherwise the reset is not taken into account by the device.
3. Place the external capacitor 0.1u F on NRST as close as possible to the chip.

6.3.17 Timer characteristics

The parameters given in *Table 70* are guaranteed by design.

Refer to *Section 6.3.15: I/O port characteristics* for details on the input/output alternate function characteristics (output compare, input capture, external clock, PWM output).

Table 70. TIMx(1)(2) characteristics

Symbol	Parameter	Conditions	Min	Max	Unit
$t_{res(TIM)}$	Timer resolution time	-	1	-	$t_{TIMxCLK}$
		$f_{TIMxCLK}$ = 72 MHz	13.9	-	ns
		$f_{TIMxCLK}$ = 144 MHz	6.95	-	ns
f_{EXT}	Timer external clock frequency on CH1 to CH4	-	0	$f_{TIMxCLK}/2$	MHz
		$f_{TIMxCLK}$ = 72 MHz	0	36	MHz
Res_{TIM}	Timer resolution	TIMx (except TIM2)	-	16	bit
		TIM2	-	32	
$t_{COUNTER}$	16-bit counter clock period	-	1	65536	$t_{TIMxCLK}$
		$f_{TIMxCLK}$ = 72 MHz	0.0139	910	µs
		$f_{TIMxCLK}$ = 144 MHz	0.0069	455	µs
t_{MAX_COUNT}	Maximum possible count with 32-bit counter	-	-	65536 × 65536	$t_{TIMxCLK}$
		$f_{TIMxCLK}$ = 72 MHz	-	59.65	s
		$f_{TIMxCLK}$ = 144 MHz	-	29.825	s

1. TIMx is used as a general term to refer to the TIM1, TIM2, TIM3, TIM4, TIM8, TIM15, TIM16, TIM17 and TIM20 timers.
2. Guaranteed by design, not tested in production.

Table 71. IWDG min/max timeout period at 40 kHz (LSI) (1)

Prescaler divider	PR[2:0] bits	Min timeout (ms) RL[11:0]= 0x000	Max timeout (ms) RL[11:0]= 0xFFF
/4	0	0.1	409.6
/8	1	0.2	819.2
/16	2	0.4	1638.4
/32	3	0.8	3276.8
/64	4	1.6	6553.6
/128	5	3.2	13107.2
/256	7	6.4	26214.4

1. These timings are given for a 40 kHz clock but the microcontroller internal RC frequency can vary from 30 to 60 kHz. Moreover, given an exact RC oscillator frequency, the exact timings still depend on the phasing of the APB interface clock versus the LSI clock so that there is always a full RC period of uncertainty.

Table 72. WWDG min-max timeout value @72 MHz (PCLK)(1)

Prescaler	WDGTB	Min timeout value	Max timeout value
1	0	0.05687	3.6409
2	1	0.1137	7.2817
4	2	0.2275	14.564
8	3	0.4551	29.127

1. Guaranteed by design, not tested in production.

6.3.18 Communications interfaces

I^{2}C interface characteristics

The I^{2}C interface meets the timings requirements of the I^{2}C-bus specification and user manual rev.03 for:

- Standard-mode (Sm): with a bit rate up to 100 kbit/s
- Fast-mode (Fm): with a bit rate up to 400 kbit/s
- Fast-mode Plus (Fm+): with a bit rate up to 1Mbits/s

The I^{2}C timings requirements are guaranteed by design when the I^{2}C peripheral is properly configured (refer to Reference manual).

The SDA and SCL I/O requirements are met with the following restrictions: the SDA and SCL I/O pins are “true” open-drain. When configured as open-drain, the PMOS connected between the I/O pin and VDDIOx is disabled, but is still present. Only FTf I/O pins support Fm+ low level output current maximum requirement. Refer to *Section 6.3.15: I/O port characteristics*.

All I^{2}C I/Os embed an analog filter, refer to the *Table 73: I2C analog filter characteristics*.

Table 73. I2C analog filter characteristics(1)

Symbol	Parameter	Min	Max	Unit
t_{AF}	Pulse width of spikes that are suppressed by the analog filter	50	260	ns

1. Guaranteed by design, not tested in production.

SPI/I²S characteristics

Unless otherwise specified, the parameters given in *Table 74* for SPI or in *Table 75* for I²S are derived from tests performed under ambient temperature, f_{PCLKx} frequency and V_{DD} supply voltage conditions summarized in *Table 19*.

Refer to *Section 6.3.15: I/O port characteristics* for more details on the input/output alternate function characteristics (NSS, SCK, MOSI, MISO for SPI and WS, CK, SD for I²S).

Table 74. SPI characteristics(1)

Symbol	Parameter	Conditions	Min	Typ.	Max	Unit
f_{SCK} $1/t_{c(SCK)}$	SPI clock frequency	Master mode 2.7 V<V_{DD}<3.6 V, SPI1/4	-	-	24	MHz
		Master mode 2 V<V_{DD}<3.6 V, SPI1/2/3/4			18	
		Slave mode 2 V<V_{DD}<3.6 V, SPI1/4			24	
		Slave mode 2 V<V_{DD}<3.6 V, SPI1/2/3/4			18	
		Slave mode transmitter/full duplex 2 V<V_{DD}<3.6 V, SPI1/2/3/4			16.5(2)	
		Slave mode transmitter/full duplex 2.7 V<V_{DD}<3.6 V, SPI1/4			22.5(2))	-
$Duty_{(SCK)}$	Duty cycle of SPI clock frequency	Slave mode	30	50	70	%
$t_{su(NSS)}$	NSS setup time	Slave mode, SPI presc = 2	4*Tpclk	-	-	
$t_{h(NSS)}$	NSS hold time	Slave mode, SPI presc = 2	2*Tpclk	-	-	
$t_{w(SCKH)}$ $t_{w(SCKL)}$	SCK high and low time	Master mode	Tpclk-2	Tpclk	Tpclk+2	
$t_{su(MI)}$	Data input setup time	Master mode	3	-	-	
$t_{su(SI)}$		Slave mode	3	-	-	
$t_{h(MI)}$	Data input hold time	Master mode	6.5	-	-	
$t_{h(SI)}$		Slave mode	4.5	-	-	
$t_{a(SO)}$	Data output access time	Slave mode	10	-	30	
$t_{dis(SO)}$	Data output disable time	Slave mode	8	-	7	

Table 74. SPI characteristics(1) (continued)

Symbol	Parameter	Conditions	Min	Typ.	Max	Unit
$t_{v(SO)}$	Data output valid time	Slave mode 2.7 V<V_{DD}<3.6 V	-	15	22	
		Slave mode 2 V<V_{DD}<3.6 V	-	15	30	
$t_{v(MO)}$		Master mode	-	2	4.5	
$t_{h(SO)}$	Data output hold time	Slave mode	9	-	-	
$t_{h(MO)}$		Master mode	0	-	-	

1. Data based on characterization results, not tested in production.
2. The maximum frequency in Slave transmitter mode is determined by the sum of tv(SO) and tsu(MI) which has to fit into SCK low or high phase preceding the SCK sampling edge. This value can be achieved when the SPI communicates with a master having tsu(MI) = 0 while $Duty_{(SCK)}$ = 50%.

Figure 42. SPI timing diagram - slave mode and CPHA = 0

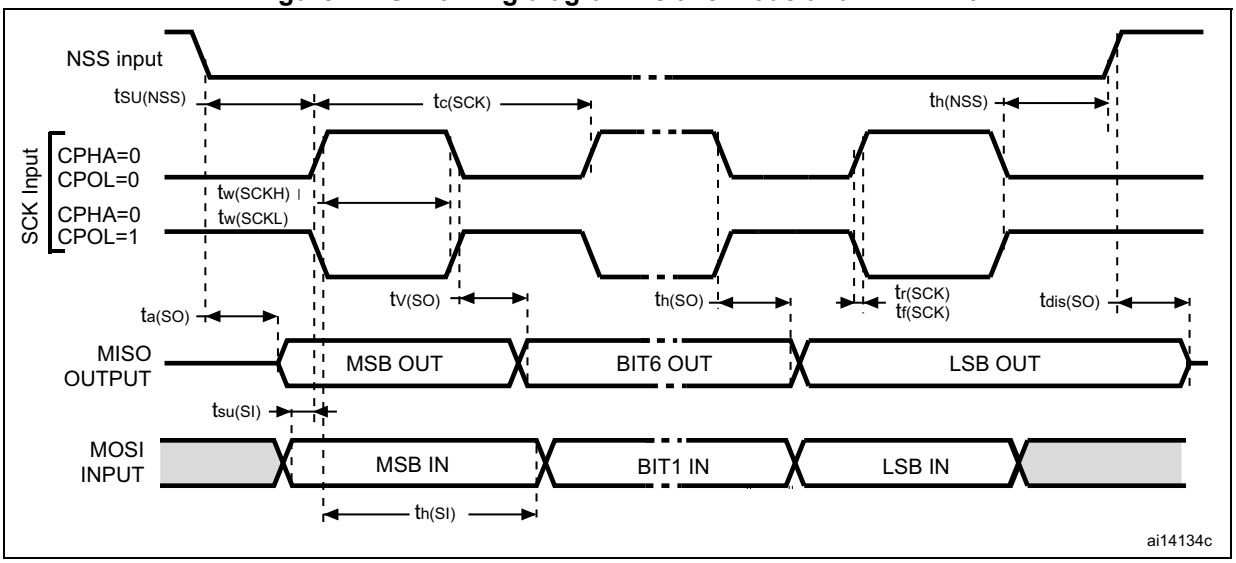

Figure 43. SPI timing diagram - slave mode and CPHA = 1[1]

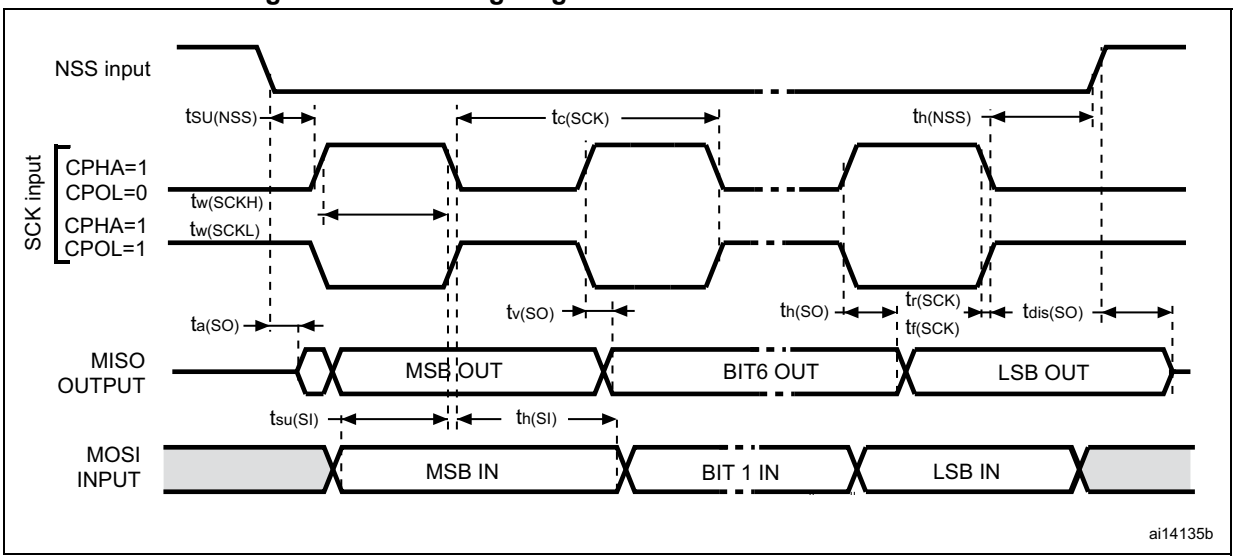

1. Measurement points are done at $0.5V_{DD}$ and with external C_L = 30 pF.

Figure 44. SPI timing diagram - master mode[1]

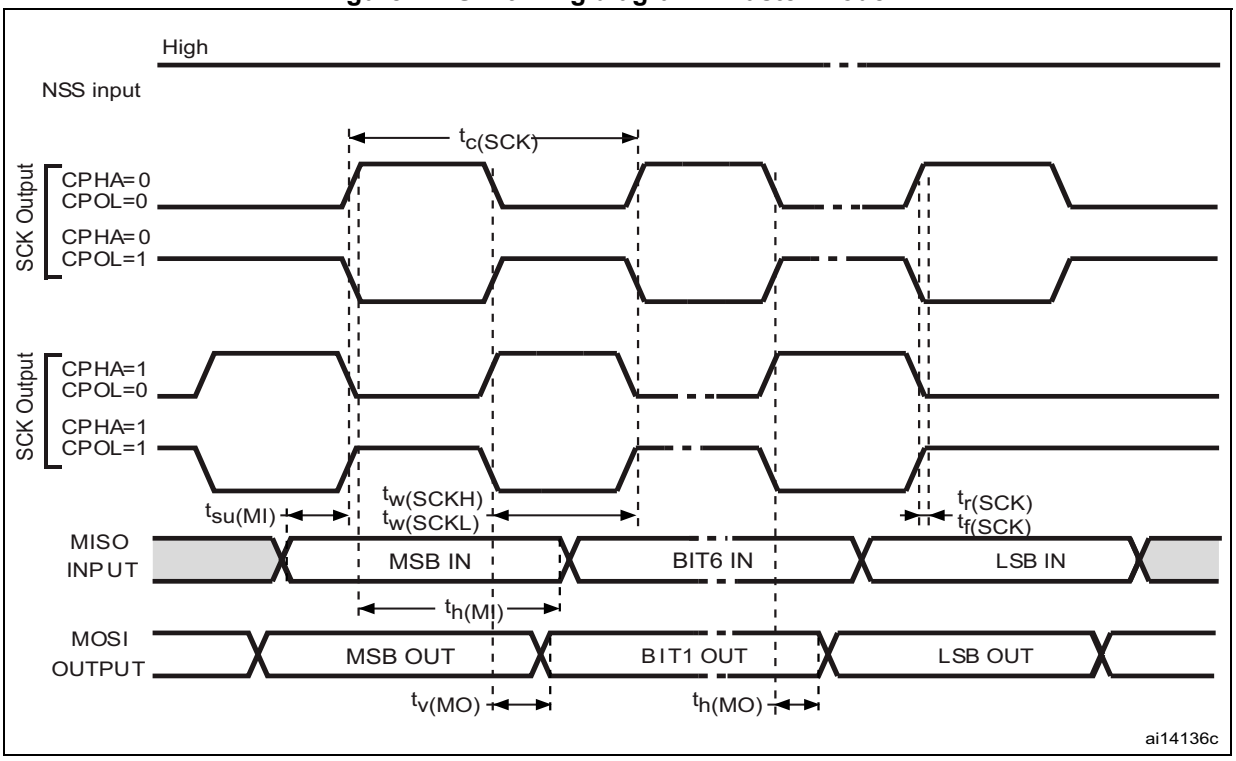

1. Measurement points are done at $0.5V_{DD}$ and with external C_L = 30 pF.

Table 75. I²S characteristics(1)

Symbol	Parameter	Conditions	Min	Max	Unit
f_{MCK}	I2S Main clock output	-	256 x 8K	256xFs (2)	MHz
f_{CK}	I2S clock frequency	Master data: 32 bits	-	64xFs	MHz
		Slave data: 32 bits	-	64xFs	-
D_{CK}	I2S clock frequency duty cycle	Slave receiver	30	70	%
$t_{v(WS)}$	WS valid time	Master mode	-	20	ns
$t_{h(WS)}$	WS hold time	Master mode	2	-	
$t_{su(WS)}$	WS setup time	Slave mode	0	-	
$t_{h(WS)}$	WS hold time	Slave mode	4	-	
$t_{su(SD_MR)}$	Data input setup time	Master receiver	1	-	
$t_{su(SD_SR)}$		Slave receiver	1	-	
$t_{h(SD_MR)}$	Data input hold time	Master receiver	8	-	
$t_{h(SD_SR)}$		Slave receiver	2.5	-	
$t_{v(SD_ST)}$	Data output valid time	Slave transmitter (after enable edge)	-	50	
$t_{v(SD_MT)}$		Master transmitter (after enable edge)	-	22	
$t_{h(SD_ST)}$	Data output hold time	Slave transmitter (after enable edge)	8	-	
$t_{h(SD_MT)}$		Master transmitter (after enable edge)	1	-	

1. Data based on characterization results, not tested in production.
2. 256xFs maximum is 36 MHz (APB1 Maximum frequency)

*Note: Refer to the I²S section in RM0316 Reference Manual for more details about the sampling frequency (Fs), f_{MCK}, f_{CK}, DCK values reflect only the digital peripheral behavior, source clock precision might slightly change the values DCK depends mainly on ODD bit value. Digital contribution leads to a min of (I2SDIV/(2*I2SDIV+ODD) and a max of (I2SDIV+ODD)/(2*I2SDIV+ODD) and Fs max supported for each mode/condition.*

Figure 45. I²S slave timing diagram (Philips protocol)(1)

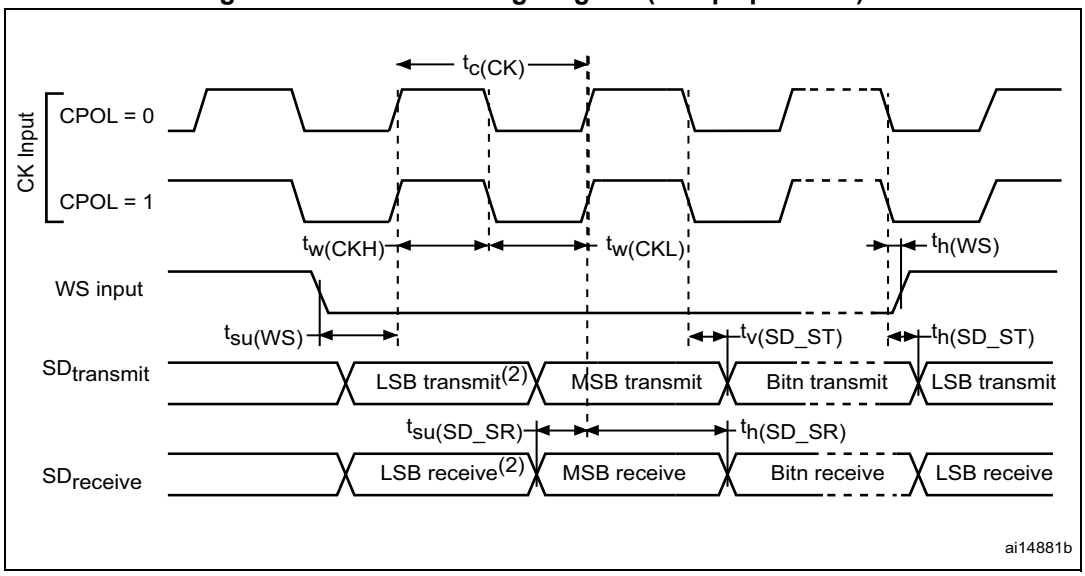

1. Measurement points are done at $0.5V_{DD}$ and with external C_L=30 pF.
2. LSB transmit/receive of the previously transmitted byte. No LSB transmit/receive is sent before the first byte.

Figure 46. I²S master timing diagram (Philips protocol)(1)

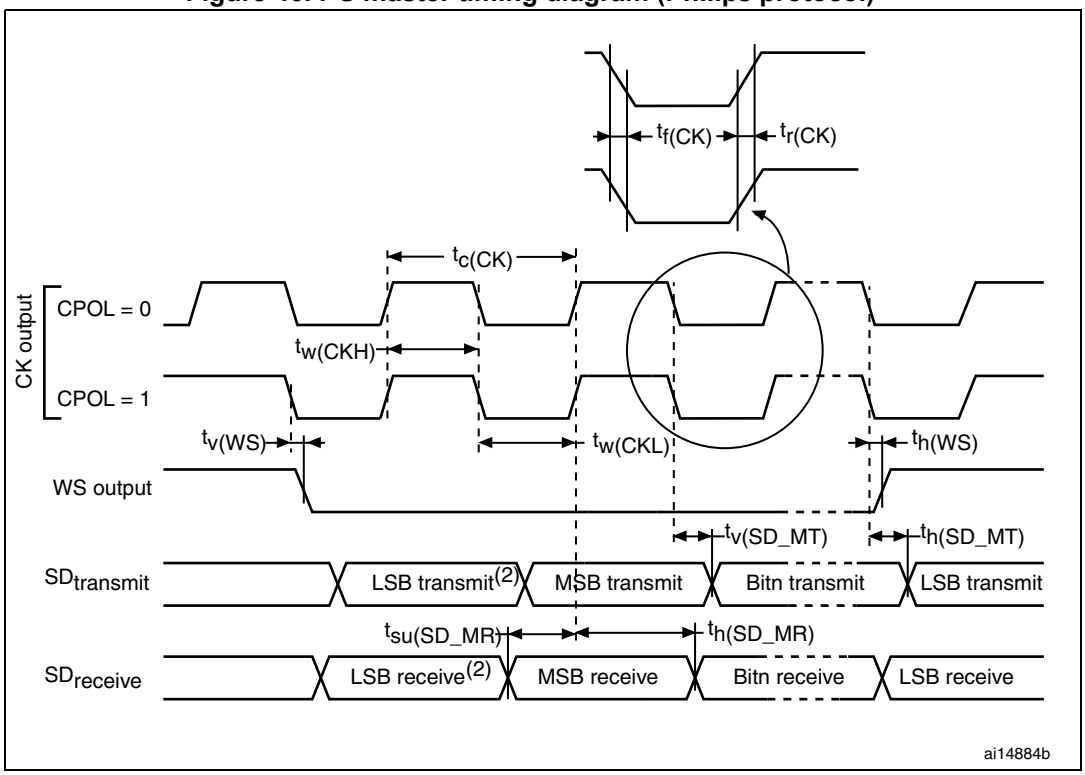

1. Measurement points are done at $0.5V_{DD}$ and with external C_L=30 pF.
2. LSB transmit/receive of the previously transmitted byte. No LSB transmit/receive is sent before the first byte.

USB characteristics

Table 76. USB startup time

Symbol	Parameter	Max	Unit
$t_{STARTUP}$(1)	USB transceiver startup time	1	µs

1. Guaranteed by design, not tested in production.

Table 77. USB DC electrical characteristics

Symbol	Parameter	Conditions	Min.(1)	Max.(1)	Unit
Input levels					
V_{DD}	USB operating voltage(2)	-	3.0(3)	3.6	V
V_{DI}(4)	Differential input sensitivity	I(USB_DP, USB_DM)	0.2	-	V
V_{CM}(4)	Differential common mode range	Includes V_{DI} range	0.8	2.5	
V_{SE}(4)	Single ended receiver threshold	-	1.3	2.0	
Output levels					
V_{OL}	Static output level low	R_L of 1.5 kΩ to 3.6 V(5)	-	0.3	V
V_{OH}	Static output level high	R_L of 15 kΩ to V_{SS}(5)	2.8	3.6	

1. All the voltages are measured from the local ground potential.
2. To be compliant with the USB 2.0 full-speed electrical specification, the USB_DP (D+) pin should be pulled up with a 1.5 kΩ resistor to a 3.0-to-3.6 V voltage range.
3. The STM32F303xD/E USB functionality is ensured down to 2.7 V but not the full USB electrical characteristics which are degraded in the 2.7-to-3.0 V V_{DD} voltage range.
4. Guaranteed by design, not tested in production.
5. R_L is the load connected on the USB drivers.

Figure 47. USB timings: definition of data signal rise and fall time

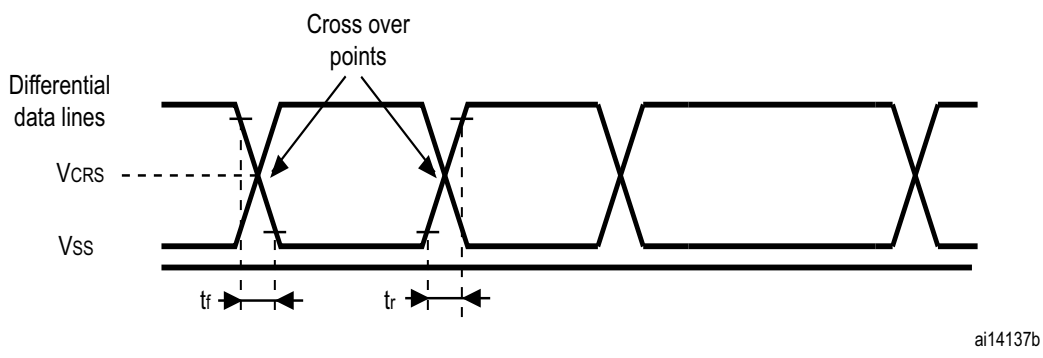

Table 78. USB: full-speed electrical characteristics(1)

Symbol	Parameter	Conditions	Min	Typ	Max	Unit
Driver characteristics						
t_r	Rise time(2)	C_L = 50 pF	4	-	20	ns
t_f	Fall time(2)	C_L = 50 pF	4	-	20	ns

Table 78. USB: full-speed electrical characteristics(1) (continued)

Symbol	Parameter	Conditions	Min	Typ	Max	Unit
t_{rfm}	Rise/ fall time matching	t_r/t_f	90	-	110	%
V_{CRS}	Output signal crossover voltage	-	1.3	-	2.0	V
Output driver Impedance(3)	Z_{DRV}	driving high and low	28	40	44	Ω

1. Guaranteed by design, not tested in production.
2. Measured from 10% to 90% of the data signal. For more detailed information, refer to USB Specification - Chapter 7 (version 2.0).
3. No external termination series resistors are required on USB_DP (D+) and USB_DM (D-), the matching impedance is already included in the embedded driver.

CAN (controller area network) interface

Refer to *Section 6.3.15: I/O port characteristics* for more details on the input/output alternate function characteristics (CAN_TX and CAN_RX).

6.3.19 ADC characteristics

Unless otherwise specified, the parameters given in *Table 79* to *Table 82* are guaranteed by design, with conditions summarized in *Table 19*.

Table 79. ADC characteristics

Symbol	Parameter	Conditions	Min	Typ	Max	Unit
V_{DDA}	Analog supply voltage for ADC	-	2.0	-	3.6	V
I_{DDA}	Current on VDDA pin (see *Figure 48*)	Single-ended mode, 5 MSPS	-	907	1033	µA
		Single-ended mode, 1 MSPS	-	194	285.5	
		Single-ended mode, 200 KSPS	-	51.5	70	
		Differential mode, 5 MSPS	-	887.5	1009	
		Differential mode, 1 MSPS	-	212	285	
		Differential mode, 200 KSPS	-	51	69.5	

Table 79. ADC characteristics (continued)

Symbol	Parameter	Conditions	Min	Typ	Max	Unit
I_{REF}	Current on VREF+ pin (see *Figure 49*)	Single-ended mode, 5 MSPS	-	104	139	µA
		Single-ended mode, 1 MSPS	-	20.4	37	
		Single-ended mode, 200 KSPS	-	3.3	11.3	
		Differential mode, 5 MSPS	-	174	235	
		Differential mode, 1 MSPS	-	34.6	52.6	
		Differential mode, 200 KSPS	-	6	13.6	
V_{REF+}	Positive reference voltage	-	2	-	V_{DDA}	V
f_{ADC}	ADC clock frequency	-	0.14	-	72	MHz
f_S(1)	Sampling rate	Resolution = 12 bits, Fast Channel	0.01	-	5.14	MSPS
		Resolution = 10 bits, Fast Channel	0.012	-	6	
		Resolution = 8 bits, Fast Channel	0.014	-	7.2	
		Resolution = 6 bits, Fast Channel	0.0175	-	9	
f_{TRIG}(1)	External trigger frequency	f_{ADC} = 72 MHz Resolution = 12 bits	-	-	5.14	MHz
		Resolution = 12 bits	-	-	14	$1/f_{ADC}$
V_{AIN}	Conversion voltage range(2)	-	0	-	V_{REF+}	V
R_{AIN}(1)	External input impedance	-	-	-	100	kΩ
C_{ADC}(1)	Internal sample and hold capacitor	-	-	5	-	pF
t_{STAB}(1)	Power-up time	-	0	0	1	µs
t_{CAL}(1)	Calibration time	f_{ADC} = 72 MHz	1.56			µs
		-	112			$1/f_{ADC}$
t_{latr}(1)	Trigger conversion latency Regular and injected channels without conversion abort	CKMODE = 00	1.5	2	2.5	$1/f_{ADC}$
		CKMODE = 01	-	-	2	$1/f_{ADC}$
		CKMODE = 10	-	-	2.25	$1/f_{ADC}$
		CKMODE = 11	-	-	2.125	$1/f_{ADC}$
$t_{latrinj}$(1)	Trigger conversion latency Injected channels aborting a regular conversion	CKMODE = 00	2.5	3	3.5	$1/f_{ADC}$
		CKMODE = 01	-	-	3	$1/f_{ADC}$
		CKMODE = 10	-	-	3.25	$1/f_{ADC}$
		CKMODE = 11	-	-	3.125	$1/f_{ADC}$

Table 79. ADC characteristics (continued)

Symbol	Parameter	Conditions	Min	Typ	Max	Unit
t_S(1)	Sampling time	f_{ADC} = 72 MHz	0.021	-	8.35	µs
		-	1.5	-	601.5	$1/f_{ADC}$
$T_{ADCVREG_STUP}$(1)	ADC Voltage Regulator Start-up time	-	-	-	10	µs
t_{CONV}(1)	Total conversion time (including sampling time)	f_{ADC} = 72 MHz Resolution = 12 bits	0.19	-	8.52	µs
		Resolution = 12 bits	14 to 614 (t_S for sampling + 12.5 for successive approximation)			$1/f_{ADC}$
CMIR	Common Mode Input signal range	ADC differential mode	(V_{SSA} + V_{REF}+)/2 – 0.18	(V_{SSA} + V_{REF}+)/2	(V_{SSA} + V_{REF}+)/2 + 0.18	V

1. Data guaranteed by design, not tested in Production.
2. V_{REF+} can be internally connected to V_{DDA} and V_{REF-} can be internally connected to V_{SSA}, depending on the package. Refer to *Section 4: Pinout and pin description* for further details.

Figure 48. ADC typical current consumption on VDDA pin

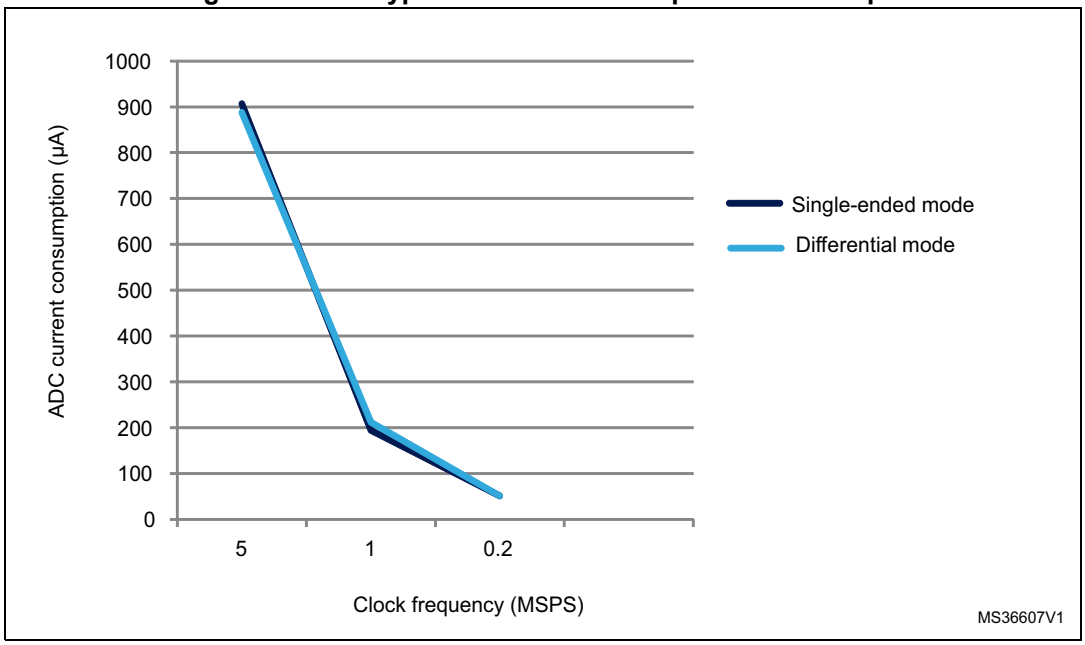

Figure 49. ADC typical current consumption on VREF+ pin

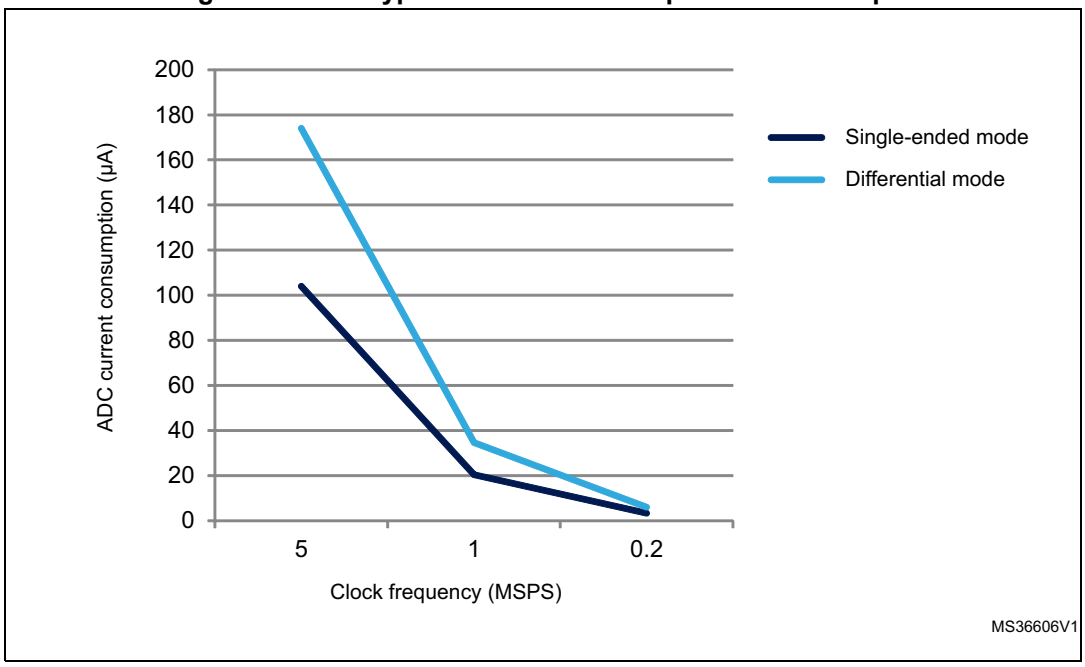

Table 80. Maximum ADC R_{AIN} (1)

Resolution	Sampling cycle @ 72 MHz	Sampling time [ns] @ 72 MHz	R_{AIN} max (kΩ)		
			Fast channels(2)	Slow channels	Other channels(3)
12 bits	1.5	20.83	0.018	NA	NA
	2.5	34.72	0.150	NA	0.022
	4.5	62.50	0.470	0.220	0.180
	7.5	104.17	0.820	0.560	0.470
	19.5	270.83	2.70	1.80	1.50
	61.5	854.17	8.20	6.80	4.70
	181.5	2520.83	22.0	18.0	15.0
	601.5	8354.17	82.0	68.0	47.0
10 bits	1.5	20.83	0.082	NA	NA
	2.5	34.72	0.270	0.082	0.100
	4.5	62.50	0.560	0.390	0.330
	7.5	104.17	1.20	0.82	0.68
	19.5	270.83	3.30	2.70	2.20
	61.5	854.17	10.0	8.2	6.8
	181.5	2520.83	33.0	27.0	22.0
	601.5	8354.17	100.0	82.0	68.0

Table 80. Maximum ADC R_{AIN} (1) (continued)

Resolution	Sampling cycle @ 72 MHz	Sampling time [ns] @ 72 MHz	R_{AIN} max (kΩ)		
			Fast channels(2)	Slow channels	Other channels(3)
8 bits	1.5	20.83	0.150	NA	0.039
	2.5	34.72	0.390	0.180	0.180
	4.5	62.50	0.820	0.560	0.470
	7.5	104.17	1.50	1.20	1.00
	19.5	270.83	3.90	3.30	2.70
	61.5	854.17	12.00	12.00	8.20
	181.5	2520.83	39.00	33.00	27.00
	601.5	8354.17	100.00	100.00	82.00
6 bits	1.5	20.83	0.270	0.100	0.150
	2.5	34.72	0.560	0.390	0.330
	4.5	62.50	1.200	0.820	0.820
	7.5	104.17	2.20	1.80	1.50
	19.5	270.83	5.60	4.70	3.90
	61.5	854.17	18.0	15.0	12.0
	181.5	2520.83	56.0	47.0	39.0
	601.5	8354.17	100.00	100.0	100.0

1. Data based on characterization results, not tested in production.
2. All fast channels, expect channels on PA2, PA6, PB1, PB12.
3. Fast channels available on PA2, PA6, PB1, PB12.

Table 81. ADC accuracy - limited test conditions, 100-/144-pin packages (1)(2)

Symbol	Parameter	Conditions			Min (3)	Typ	Max (3)	Unit
ET	Total unadjusted error	ADC clock freq. ≤ 72 MHz Sampling freq. ≤ 5 Msps $V_{DDA} = V_{REF+} = 3.3$ V 25°C 100-pin/144-pin package	Single ended	Fast channel 5.1 Ms	-	±3.5	±4.5	LSB
				Slow channel 4.8 Ms	-	±4	±4.5	
			Differential	Fast channel 5.1 Ms	-	±3	±3	
				Slow channel 4.8 Ms	-	±3	±3	
EO	Offset error		Single ended	Fast channel 5.1 Ms	-	±1	±1.5	
				Slow channel 4.8 Ms	-	±1	±2.5	
			Differential	Fast channel 5.1 Ms	-	±1	±1.5	
				Slow channel 4.8 Ms	-	±1	±1.5	
EG	Gain error		Single ended	Fast channel 5.1 Ms	-	±3	±4	
				Slow channel 4.8 Ms	-	±3.5	±4	
			Differential	Fast channel 5.1 Ms	-	±1.5	±2.5	
				Slow channel 4.8 Ms	-	±2	±2.5	
ED	Differential linearity error		Single ended	Fast channel 5.1 Ms	-	±1	±1.5	
				Slow channel 4.8 Ms	-	±1	±1.5	
			Differential	Fast channel 5.1 Ms	-	±1	±1	
				Slow channel 4.8 Ms	-	±1	±1	
EL	Integral linearity error		Single ended	Fast channel 5.1 Ms	-	±1.5	±2	
				Slow channel 4.8 Ms	-	±1.5	±3	
			Differential	Fast channel 5.1 Ms	-	±1	±1.5	
				Slow channel 4.8 Ms	-	±1	±1.5	
ENOB(4)	Effective number of bits		Single ended	Fast channel 5.1 Ms	10.7	10.8	-	bits
				Slow channel 4.8 Ms	10.7	10.8	-	
			Differential	Fast channel 5.1 Ms	11.2	11.3	-	
				Slow channel 4.8 Ms	11.1	11.3	-	
SINAD(4)	Signal-to-noise and distortion ratio		Single ended	Fast channel 5.1 Ms	66	67	-	dB
				Slow channel 4.8 Ms	66	67	-	
			Differential	Fast channel 5.1 Ms	69	70	-	
				Slow channel 4.8 Ms	69	70	-	

Table 81. ADC accuracy - limited test conditions, 100-/144-pin packages (1)(2) (continued)

Symbol	Parameter	Conditions			Min (3)	Typ	Max (3)	Unit
SNR(4)	Signal-to-noise ratio	ADC clock freq. ≤ 72 MHz Sampling freq ≤ 5 Msps $V_{DDA} = V_{REF+} = 3.3$ V 25°C 100-pin/144-pin package	Single ended	Fast channel 5.1 Ms	66	67	-	dB
				Slow channel 4.8 Ms	66	67	-	
			Differential	Fast channel 5.1 Ms	69	70	-	
				Slow channel 4.8 Ms	69	70	-	
THD(4)	Total harmonic distortion		Single ended	Fast channel 5.1 Ms	-	-76	-76	
				Slow channel 4.8 Ms	-	-76	-76	
			Differential	Fast channel 5.1 Ms	-	-80	-80	
				Slow channel 4.8 Ms	-	-80	-80	

1. ADC DC accuracy values are measured after internal calibration.
2. ADC accuracy vs. negative Injection Current: Injecting negative current on any analog input pins should be avoided as this significantly reduces the accuracy of the conversion being performed on another analog input. It is recommended to add a Schottky diode (pin to ground) to analog pins which may potentially inject negative current.
Any positive injection current within the limits specified for $I_{INJ(PIN)}$ and $\Sigma I_{INJ(PIN)}$ in *Section 6.3.15* does not affect the ADC accuracy.
3. Data based on characterization results, not tested in production.
4. Value measured with a -0.5 dB full scale 50 kHz sine wave input signal.

Table 82. ADC accuracy, 100-pin/144-pin packages(1)(2)(3)

Symbol	Parameter	Conditions			Min (4)	Max(4)	Unit
ET	Total unadjusted error	ADC clock freq. ≤ 72 MHz, Sampling freq. ≤ 5 Msps 2.0 V ≤ V_{DDA}, V_{REF+} ≤ 3.6 V 100-pin/144-pin package	Single Ended	Fast channel 5.1 Ms	-	±6.5	LSB
				Slow channel 4.8 Ms	-	±6.5	
			Differential	Fast channel 5.1 Ms	-	±4	
				Slow channel 4.8 Ms	-	±4	
EO	Offset error		Single Ended	Fast channel 5.1 Ms	-	±3	
				Slow channel 4.8 Ms	-	±3	
			Differential	Fast channel 5.1 Ms	-	±2	
				Slow channel 4.8 Ms	-	±2	
EG	Gain error		Single Ended	Fast channel 5.1 Ms	-	±6	
				Slow channel 4.8 Ms	-	±6	
			Differential	Fast channel 5.1 Ms	-	±3	
				Slow channel 4.8 Ms	-	±3	
ED	Differential linearity error		Single Ended	Fast channel 5.1 Ms	-	±1.5	
				Slow channel 4.8 Ms	-	±1.5	
			Differential	Fast channel 5.1 Ms	-	±1.5	
				Slow channel 4.8 Ms	-	±1.5	

Table 82. ADC accuracy, 100-pin/144-pin packages(1)(2)(3) (continued)

Symbol	Parameter	Conditions			Min (4)	Max(4)	Unit
EL	Integral linearity error	ADC clock freq. ≤ 72 MHz, Sampling freq. ≤ 5 Msps, 2.0 V≤ V_{DDA}, V_{REF+} ≤ 3.6 V 100-pin/144-pin package	Single Ended	Fast channel 5.1 Ms	-	±2	LSB
				Slow channel 4.8 Ms	-	±3	
			Differential	Fast channel 5.1 Ms	-	±2	
				Slow channel 4.8 Ms	-	±2	
ENOB (5)	Effective number of bits		Single Ended	Fast channel 5.1 Ms	10.4	-	bits
				Slow channel 4.8 Ms	10.2	-	
			Differential	Fast channel 5.1 Ms	10.8	-	
				Slow channel 4.8 Ms	10.8	-	
SINAD (5)	Signal-to-noise and distortion ratio		Single Ended	Fast channel 5.1 Ms	64	-	dB
				Slow channel 4.8 Ms	63	-	
			Differential	Fast channel 5.1 Ms	67	-	
				Slow channel 4.8 Ms	67	-	
SNR(5)	Signal-to-noise ratio		Single Ended	Fast channel 5.1 Ms	64	-	
				Slow channel 4.8 Ms	64	-	
			Differential	Fast channel 5.1 Ms	67	-	
				Slow channel 4.8 Ms	67	-	
THD(5)	Total harmonic distortion		Single Ended	Fast channel 5.1 Ms	-	74	
				Slow channel 4.8 Ms	-	-74	
			Differential	Fast channel 5.1 Ms	-	-78	
				Slow channel 4.8 Ms	-	-76	

1. ADC DC accuracy values are measured after internal calibration.
2. ADC accuracy vs. negative Injection Current: Injecting negative current on any analog input pins should be avoided as this significantly reduces the accuracy of the conversion being performed on another analog input. It is recommended to add a Schottky diode (pin to ground) to analog pins which may potentially inject negative current.
   Any positive injection current within the limits specified for $I_{INJ(PIN)}$ and $\Sigma I_{INJ(PIN)}$ in *Section 6.3.15* does not affect the ADC accuracy.
3. Better performance may be achieved in restricted V_{DDA}, frequency and temperature ranges.
4. Data based on characterization results, not tested in production.
5. Value measured with a -0.5 dB full scale 50 kHz sine wave input signal.

Table 83. ADC accuracy - limited test conditions, 64-pin packages(1)(2)

Symbol	Parameter	Conditions			Min (3)	Typ	Max (3)	Unit
ET	Total unadjusted error	ADC clock freq. ≤72 MHz Sampling freq. ≤5 Msps V_{DDA} = 3.3 V 25°C 64-pin package	Single ended	Fast channel 5.1 Ms	-	±4	±4.5	LSB
				Slow channel 4.8 Ms	-	±5.5	±6	
			Differential	Fast channel 5.1 Ms	-	±3.5	±4	
				Slow channel 4.8 Ms	-	±3.5	±4	
EO	Offset error		Single ended	Fast channel 5.1 Ms	-	±2	±2	
				Slow channel 4.8 Ms	-	±1.5	±2	
			Differential	Fast channel 5.1 Ms	-	±1.5	±2	
				Slow channel 4.8 Ms	-	±1.5	±2	
EG	Gain error		Single ended	Fast channel 5.1 Ms	-	±3	±4	
				Slow channel 4.8 Ms	-	±5	±5.5	
			Differential	Fast channel 5.1 Ms	-	±3	±3	
				Slow channel 4.8 Ms	-	±3	±3.5	
ED	Differential linearity error		Single ended	Fast channel 5.1 Ms	-	±1	±1	
				Slow channel 4.8 Ms	-	±1	±1	
			Differential	Fast channel 5.1 Ms	-	±1	±1	
				Slow channel 4.8 Ms	-	±1	±1	
EL	Integral linearity error		Single ended	Fast channel 5.1 Ms	-	±1.5	±2	
				Slow channel 4.8 Ms	-	±2	±3	
			Differential	Fast channel 5.1 Ms	-	±1.5	±1.5	
				Slow channel 4.8 Ms	-	±1.5	±2	
ENOB (4)	Effective number of bits		Single ended	Fast channel 5.1 Ms	10.8	10.8	-	bit
				Slow channel 4.8 Ms	10.8	10.8	-	
			Differential	Fast channel 5.1 Ms	11.2	11.3	-	
				Slow channel 4.8 Ms	11.2	11.3	-	
SINAD (4)	Signal-to-noise and distortion ratio		Single ended	Fast channel 5.1 Ms	66	67	-	dB
				Slow channel 4.8 Ms	66	67	-	
			Differential	Fast channel 5.1 Ms	69	70	-	
				Slow channel 4.8 Ms	69	70	-	

Table 83. ADC accuracy - limited test conditions, 64-pin packages(1)(2) (continued)

Symbol	Parameter	Conditions			Min (3)	Typ	Max (3)	Unit
SNR(4)	Signal-to-noise ratio	ADC clock freq. ≤ 72 MHz Sampling freq ≤ 5 Msps V_{DDA} = 3.3 V 25°C 64-pin package	Single ended	Fast channel 5.1 Ms	66	67	-	dB
				Slow channel 4.8 Ms	66	67	-	
			Differential	Fast channel 5.1 Ms	69	70	-	
				Slow channel 4.8 Ms	69	70	-	
THD(4)	Total harmonic distortion		Single ended	Fast channel 5.1 Ms	-	-80	-80	
				Slow channel 4.8 Ms	-	-78	-77	
			Differential	Fast channel 5.1 Ms	-	-83	-82	
				Slow channel 4.8 Ms	-	-81	-80	

1. ADC DC accuracy values are measured after internal calibration.
2. ADC accuracy vs. negative Injection Current: Injecting negative current on any analog input pins should be avoided as this significantly reduces the accuracy of the conversion being performed on another analog input. It is recommended to add a Schottky diode (pin to ground) to analog pins which may potentially inject negative current.
Any positive injection current within the limits specified for $I_{INJ(PIN)}$ and $\Sigma I_{INJ(PIN)}$ in *Section 6.3.15* does not affect the ADC accuracy.
3. Data based on characterization results, not tested in production.
4. Value measured with a -0.5 dB full scale 50 kHz sine wave input signal.

Table 84. ADC accuracy, 64-pin packages(1)(2)(3)

Symbol	Parameter	Conditions			Min(4)	Max (4)	Unit
ET	Total unadjusted error	ADC clock freq. ≤ 72 MHz, Sampling freq. ≤ 5 Msps 2.0 V ≤ V_{DDA} ≤ 3.6 V 64-pin package	Single ended	Fast channel 5.1 Ms	-	±6.5	LSB
				Slow channel 4.8 Ms	-	±6.5	
			Differential	Fast channel 5.1 Ms	-	±4	
				Slow channel 4.8 Ms	-	±4.5	
EO	Offset error		Single ended	Fast channel 5.1 Ms	-	±3	
				Slow channel 4.8 Ms	-	±3	
			Differential	Fast channel 5.1 Ms	-	±2.5	
				Slow channel 4.8 Ms	-	±2.5	
EG	Gain error		Single ended	Fast channel 5.1 Ms	-	±6	
				Slow channel 4.8 Ms	-	±6	
			Differential	Fast channel 5.1 Ms	-	±3.5	
				Slow channel 4.8 Ms	-	±4	
ED	Differential linearity error		Single ended	Fast channel 5.1 Ms	-	±1.5	
				Slow channel 4.8 Ms	-	±1.5	
			Differential	Fast channel 5.1 Ms	-	±1.5	
				Slow channel 4.8 Ms	-	±1.5	

Table 84. ADC accuracy, 64-pin packages(1)(2)(3) (continued)

Symbol	Parameter	Conditions			Min(4)	Max (4)	Unit
EL	Integral linearity error	ADC clock freq. ≤ 72 MHz, Sampling freq ≤ 5 Msps, 2.0 V ≤ V_{DDA} ≤ 3.6 V 64-pin package	Single ended	Fast channel 5.1 Ms	-	±3	LSB
				Slow channel 4.8 Ms	-	±3.5	
			Differential	Fast channel 5.1 Ms	-	±2	
				Slow channel 4.8 Ms	-	±2.5	
ENOB (5)	Effective number of bits		Single ended	Fast channel 5.1 Ms	10.4	-	bits
				Slow channel 4.8 Ms	10.4	-	
			Differential	Fast channel 5.1 Ms	10.8	-	
				Slow channel 4.8 Ms	10.8	-	
SINAD (5)	Signal-to-noise and distortion ratio		Single ended	Fast channel 5.1 Ms	64	-	dB
				Slow channel 4.8 Ms	63	-	
			Differential	Fast channel 5.1 Ms	67	-	
				Slow channel 4.8 Ms	67	-	
SNR(5)	Signal-to-noise ratio		Single ended	Fast channel 5.1 Ms	64	-	dB
				Slow channel 4.8 Ms	64	-	
			Differential	Fast channel 5.1 Ms	67	-	
				Slow channel 4.8 Ms	67	-	
THD(5)	Total harmonic distortion		Single ended	Fast channel 5.1 Ms	-	-75	
				Slow channel 4.8 Ms	-	-75	
			Differential	Fast channel 5.1 Ms	-	-79	
				Slow channel 4.8 Ms	-	-78	

1. ADC DC accuracy values are measured after internal calibration.
2. ADC accuracy vs. negative Injection Current: Injecting negative current on any analog input pins should be avoided as this significantly reduces the accuracy of the conversion being performed on another analog input. It is recommended to add a Schottky diode (pin to ground) to analog pins which may potentially inject negative current.
Any positive injection current within the limits specified for $I_{INJ(PIN)}$ and $\Sigma I_{INJ(PIN)}$ in *Section 6.3.15* does not affect the ADC accuracy.
3. Better performance may be achieved in restricted V_{DDA}, frequency and temperature ranges.
4. Data based on characterization results, not tested in production.
5. Value measured with a -0.5 dB full scale 50 kHz sine wave input signal.

Table 85. ADC accuracy at 1MSPS(1)(2)

Symbol	Parameter	Test conditions		Typ	Max(3)	Unit
ET	Total unadjusted error	ADC Freq ≤ 72 MHz Sampling Freq ≤ 1MSPS 2.4 V ≤ V_{DDA} = V_{REF+} ≤ 3.6 V Single-ended mode	Fast channel	±2.5	±5	LSB
			Slow channel	±3.5	±5	
EO	Offset error		Fast channel	±1	±2.5	
			Slow channel	±1.5	±2.5	
EG	Gain error		Fast channel	±2	±3	
			Slow channel	±3	±4	
ED	Differential linearity error		Fast channel	±0.7	±2	
			Slow channel	±0.7	±2	
EL	Integral linearity error		Fast channel	±1	±3	
			Slow channel	±1.2	±3	

1. ADC DC accuracy values are measured after internal calibration.
2. ADC accuracy vs. negative Injection Current: Injecting negative current on any analog input pins should be avoided as this significantly reduces the accuracy of the conversion being performed on another analog input. It is recommended to add a Schottky diode (pin to ground) to analog pins which may potentially inject negative current. Any positive injection current within the limits specified for IINJ(PIN) and ∑IINJ(PIN) in *Section 6.3.15: I/O port characteristics* does not affect the ADC accuracy.
3. Data based on characterization results, not tested in production.

Figure 50. ADC accuracy characteristics

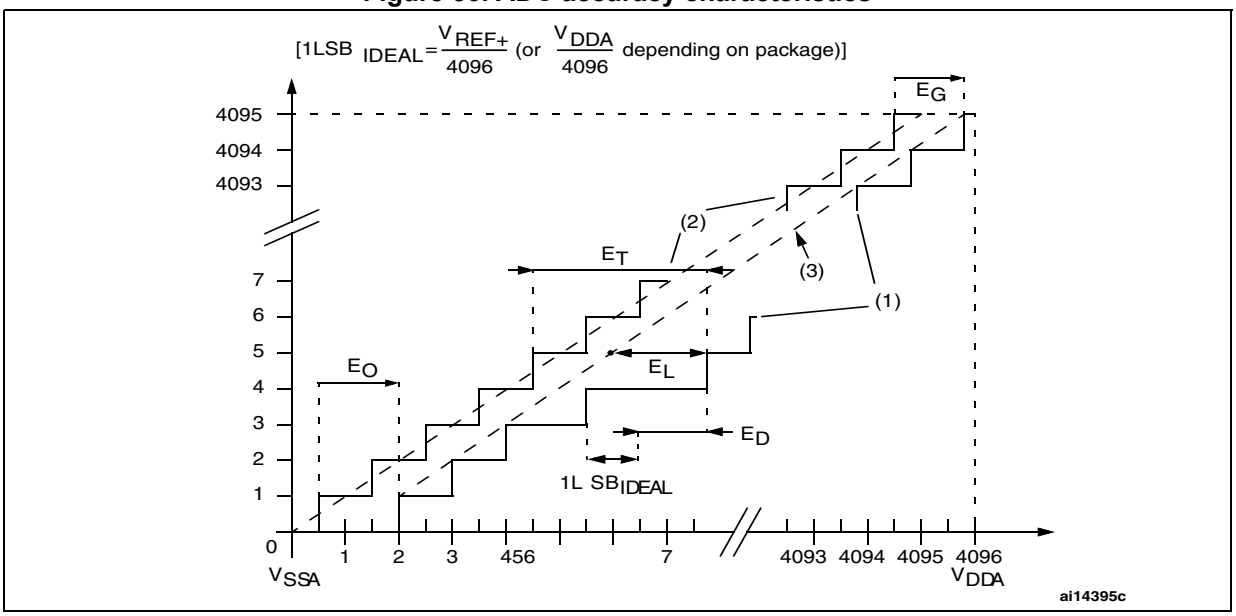

Figure 51. Typical connection diagram using the ADC

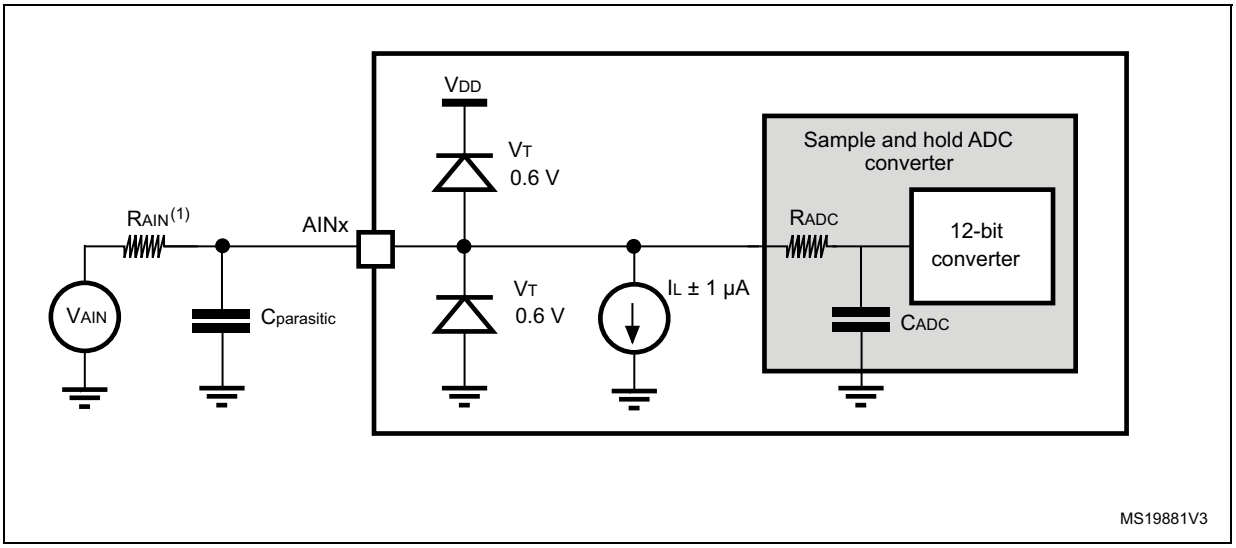

1. Refer to *Table 79* for the values of R_{AIN}.
2. $C_{parasitic}$ represents the capacitance of the PCB (dependent on soldering and PCB layout quality) plus the pad capacitance (roughly 7 pF). A high $C_{parasitic}$ value downgrades conversion accuracy. To remedy this, f_{ADC} should be reduced.

General PCB design guidelines

Power supply decoupling should be performed as shown in *Figure 12*. The 10 nF capacitor should be ceramic (good quality) and it should be placed as close as possible to the chip.

6.3.20 DAC electrical specifications

Table 86. DAC characteristics

Symbol	Parameter	Conditions	Min	Typ	Max	Unit
V_{DDA}	Analog supply voltage	-	2.4	-	3.6	V
R_{LOAD}(1)	Resistive load	DAC output buffer ON	5	-	-	kΩ
R_L	Resistive load	Dac output buffer ON: connected to V_{SSA}	5	-	-	kΩ
		Dac output buffer ON: connected to V_{DDA}	25	-	-	kΩ
R_O(1)	Output impedance	DAC output buffer OFF	-	-	15	kΩ
C_{LOAD}(1)	Capacitive load	DAC output buffer ON	-	-	50	pF
V_{DAC_OUT} (1)	Voltage on DAC_OUT output	Corresponds to 12-bit input code (0x0E0) to (0xF1C) at V_{DDA} = 3.6 V and (0x155) and (0xEAB) at V_{DDA} = 2.4 V DAC output buffer ON.	0.2	-	V_{DDA} – 0.2	V
		DAC output buffer OFF	-	0.5	V_{DDA} - 1LSB	mV

Table 86. DAC characteristics (continued)

Symbol	Parameter	Conditions	Min	Typ	Max	Unit
I_{REF}	DAC DC current consumption in quiescent mode (Standby mode)	With no load, worst code (0xF1C) on the input	-	-	220	µA
I_{DDA}(3)	DAC DC current consumption in quiescent mode (Standby mode)(2)	With no load, middle code (0x800) on the input.	-	-	380	µA
		With no load, worst code (0xF1C) on the input.	-	-	480	µA
DNL(3)	Differential non linearity Difference between two consecutive code-1LSB)	Given for a 10-bit input code	-	-	±0.5	LSB
		Given for a 12-bit input code	-	-	±2	LSB
INL(3)	Integral non linearity (difference between measured value at Code i and the value at Code i on a line drawn between Code 0 and last Code 4095)	Given for a 10-bit input code	-	-	±1	LSB
		Given for a 12-bit input code	-	-	±4	LSB
Offset(3)	Offset error (difference between measured value at Code (0x800) and the ideal value = $V_{DDA}/2$)	-	-	-	±10	mV
		Given for a 10-bit input code at V_{DDA} = 3.6 V	-	-	±3	LSB
		Given for a 12-bit input code at V_{DDA} = 3.6 V	-	-	±12	LSB
Gain error(3)	Gain error	Given for a 12-bit input code	-	-	±0.5	%
$t_{SETTLING}$(3)	Settling time (full scale: for a 12-bit input code transition between the lowest and the highest input codes when DAC_OUT reaches final value ±1LSB	$C_{LOAD} \leq 50$ pF, $R_{LOAD} \geq 5$ kΩ	-	3	4	µs
t_{STAB}	Power-up time	-	1			conversion cycle
Update rate(3)	Max frequency for a correct DAC_OUT change when small variation in the input code (from code i to i+1LSB)	$C_{LOAD} \leq 50$ pF, $R_{LOAD} \geq 5$ kΩ	-	-	1	MS/s
t_{WAKEUP}(3)	Wakeup time from off state (Setting the ENx bit in the DAC Control register)	$C_{LOAD} \leq 50$ pF, $R_{LOAD} \geq 5$ kΩ	-	6.5	10	µs
PSRR+ (1)	Power supply rejection ratio (to V_{DDA}) (static DC measurement	$C_{LOAD} = 50$ pF, No $R_{LOAD} \geq 5$ kΩ,	-	–67	–40	dB
I_{skink}(1)	Output sink current	DAC buffer ON Output level higher than 0.2 V	100	-	-	µA

1. Guaranteed by design, not tested in production.

2. Quiescent mode refers to the state of the DAC a keeping steady value on the output, so no dynamic consumption is involved.
3. Data based on characterization results, not tested in production.

Figure 52. 12-bit buffered /non-buffered DAC

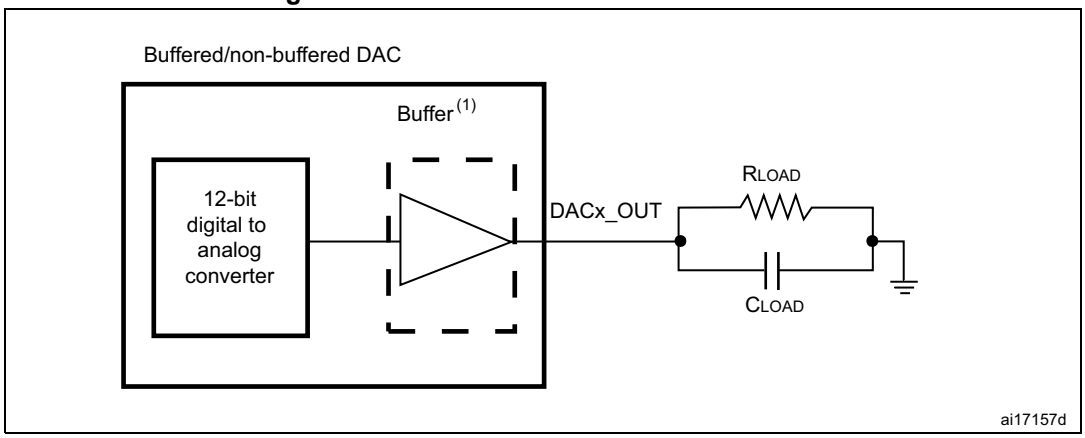

1. The DAC integrates an output buffer that can be used to reduce the output impedance and to drive external loads directly without the use of an external operational amplifier. The buffer can be bypassed by configuring the BOFFx bit in the DAC_CR register.

6.3.21 Comparator characteristics

Table 87. Comparator characteristics(1)

Symbol	Parameter	Conditions	Min.	Typ.	Max.	Unit
V_{DDA}	Analog supply voltage	-	2	-	3.6	V
V_{IN}	Comparator input voltage range	-	0	-	V_{DDA}	
V_{BG}	Scaler input voltage	-	-	$V_{REFINIT}$	-	
V_{SC}	Scaler offset voltage	-	-	±5	±10	mV
t_{S_SC}	Scaler startup time from power down	-	-	-	0.2	ms
t_{START}	Comparator startup time	$V_{DDA} \geq 2.7$ V	-	-	4	µs
		$V_{DDA} < 2.7$ V	-	-	10	
t_D	Propagation delay for 200 mV step with 100 mV overdrive	$V_{DDA} \geq 2.7$ V	-	25	28	ns
		$V_{DDA} < 2.7$ V	-	28	30	
	Propagation delay for full range step with 100 mV overdrive	$V_{DDA} \geq 2.7$ V	-	32	35	
		$V_{DDA} < 2.7$ V	-	35	40	
V_{OFFSET}	Comparator offset error	$V_{DDA} \geq 2.7$ V	-	±5	±10	mV
		$V_{DDA} < 2.7$ V	-	-	±25	

Table 87. Comparator characteristics(1) (continued)

Symbol	Parameter	Conditions	Min.	Typ.	Max.	Unit
TV_{OFFSET}	Total offset variation	Full temperature range	-	-	3	mV
I_{DDA}	COMP current consumption	-	-	400	600	µA

1. Guaranteed by design, not tested in production.

6.3.22 Operational amplifier characteristics

Table 88. Operational amplifier characteristics(1)

Symbol	Parameter		Condition	Min	Typ	Max	Unit
V_{DDA}	Analog supply voltage		-	2.4	-	3.6	V
CMIR	Common mode input range		-	0	-	V_{DDA}	V
VI_{OFFSET}	Input offset voltage	Maximum calibration range	25°C, No Load on output.	-	-	4	mV
			All voltage/Temp.	-	-	6	
		After offset calibration	25°C, No Load on output.	-	-	1.6	
			All voltage/Temp.	-	-	3	
ΔVI_{OFFSET}	Input offset voltage drift		-	-	5	-	µV/°C
I_{LOAD}	Drive current		-	-	-	500	µA
I_{DDA}	OPAMP consumption		No load, quiescent mode	-	690	1450	µA
TS_OPAMP_VOUT	ADC sampling time when reading the OPAMP output.		-	400	-	-	ns
CMRR	Common mode rejection ratio		-	-	90	-	dB
PSRR	Power supply rejection ratio		DC	73	117	-	dB
GBW	Bandwidth		-	-	8.2	-	MHz
SR	Slew rate		-	-	4.7	-	V/µs
R_{LOAD}	Resistive load		-	4	-	-	kΩ
C_{LOAD}	Capacitive load		-	-	-	50	pF
VOH_{SAT}	High saturation voltage(2)		R_{load} = min, Input at V_{DDA}.	$V_{DDA-100}$	-	-	mV
			R_{load} = 20K, Input at V_{DDA}.	V_{DDA-20}	-	-	
VOL_{SAT}	Low saturation voltage(2)		Rload = min, input at 0V	-	-	100	
			Rload = 20K, input at 0V.	-	-	20	
φm	Phase margin		-	-	62	-	°
$t_{OFFTRIM}$	Offset trim time: during calibration, minimum time needed between two steps to have 1 mV accuracy		-	-	-	2	ms
t_{WAKEUP}	Wake up time from OFF state.		C_{LOAD} ≤50 pf, R_{LOAD} ≥ 4 kΩ, Follower configuration	-	2.8	5	µs

Table 88. Operational amplifier characteristics(1) (continued)

Symbol	Parameter	Condition	Min	Typ	Max	Unit
PGA gain	Non inverting gain value	-	-	2	-	-
			-	4	-	-
			-	8	-	-
			-	16	-	-
$R_{network}$	R2/R1 internal resistance values in PGA mode (3)	Gain=2	-	5.4/5.4	-	kΩ
		Gain=4	-	16.2/5.4	-	
		Gain=8	-	37.8/5.4	-	
		Gain=16	-	40.5/2.7	-	
PGA gain error	PGA gain error	-	-1%	-	1%	-
I_{bias}	OPAMP input bias current	-	-	-	±0.2(4)	µA
PGA BW	PGA bandwidth for different non inverting gain	PGA Gain = 2, Cload = 50pF, Rload = 4 KΩ	-	4	-	MHz
		PGA Gain = 4, Cload = 50pF, Rload = 4 KΩ	-	2	-	
		PGA Gain = 8, Cload = 50pF, Rload = 4 KΩ	-	1	-	
		PGA Gain = 16, Cload = 50pF, Rload = 4 KΩ	-	0.5	-	
en	Voltage noise density	@ 1KHz, Output loaded with 4 KΩ	-	109	-	$\frac{nV}{\sqrt{Hz}}$
		@ 10KHz, Output loaded with 4 KΩ	-	43	-	

1. Guaranteed by design, not tested in production.
2. The saturation voltage can be also limited by the Iload (drive current).
3. R2 is the internal resistance between OPAMP output and OPAMP inverting input.
   R1 is the internal resistance between OPAMP inverting input and ground.
   The PGA gain =1+R2/R1
4. Mostly TTa I/O leakage, when used in analog mode.

Figure 53. OPAMP voltage noise versus frequency

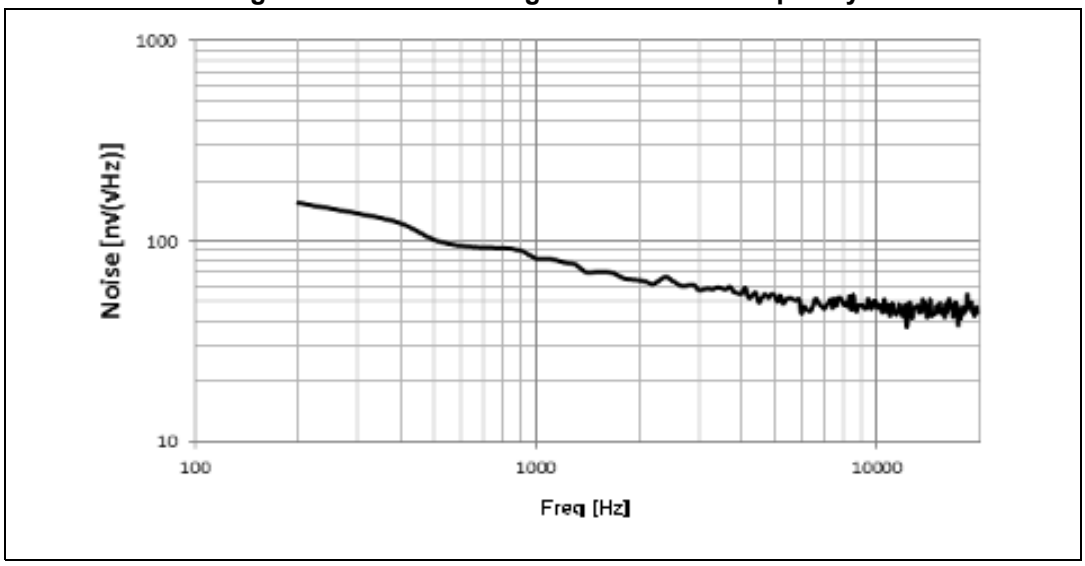

6.3.23 Temperature sensor characteristics

Table 89. TS characteristics

Symbol	Parameter	Min	Typ	Max	Unit
T_L(1)	V_{SENSE} linearity with temperature	-	±1	±2	°C
Avg_Slope(1)	Average slope	4.0	4.3	4.6	mV/°C
V_{25}	Voltage at 25 °C	1.34	1.43	1.52	V
t_{START}(1)	Startup time	4	-	10	µs
T_{S_temp}(1)(2)	ADC sampling time when reading the temperature	2.2	-	-	µs

1. Guaranteed by design, not tested in production.
2. Shortest sampling time can be determined in the application by multiple iterations.

Table 90. Temperature sensor calibration values

Calibration value name	Description	Memory address
TS_CAL1	TS ADC raw data acquired at temperature of 30 °C, V_{DDA}= 3.3 V	0x1FFF F7B8 - 0x1FFF F7B9
TS_CAL2	TS ADC raw data acquired at temperature of 110 °C V_{DDA}= 3.3 V	0x1FFF F7C2 - 0x1FFF F7C3

6.3.24 V_{BAT} monitoring characteristics

Table 91. V_{BAT} monitoring characteristics

Symbol	Parameter	Min	Typ	Max	Unit
R	Resistor bridge for V_{BAT}	-	50	-	KΩ
Q	Ratio on V_{BAT} measurement	-	2	-	-
Er(1)	Error on Q	-1	-	+1	%
T_{S_vbat}(1)(2)	ADC sampling time when reading the V_{BAT} 1mV accuracy	2.2	-	-	µs

1. Guaranteed by design, not tested in production.
2. Shortest sampling time can be determined in the application by multiple iterations.

7 Package information

7.1 Package mechanical data

To meet environmental requirements, ST offers these devices in different grades of ECOPACK® packages, depending on their level of environmental compliance. ECOPACK® specifications, grade definitions and product status are available at: *www.st.com*. ECOPACK® is an ST trademark.

7.2 LQFP144 package information

LQFP144 is a 144-pin, 20 x 20 mm low-profile quad flat package.

Figure 54. LQFP144 package outline

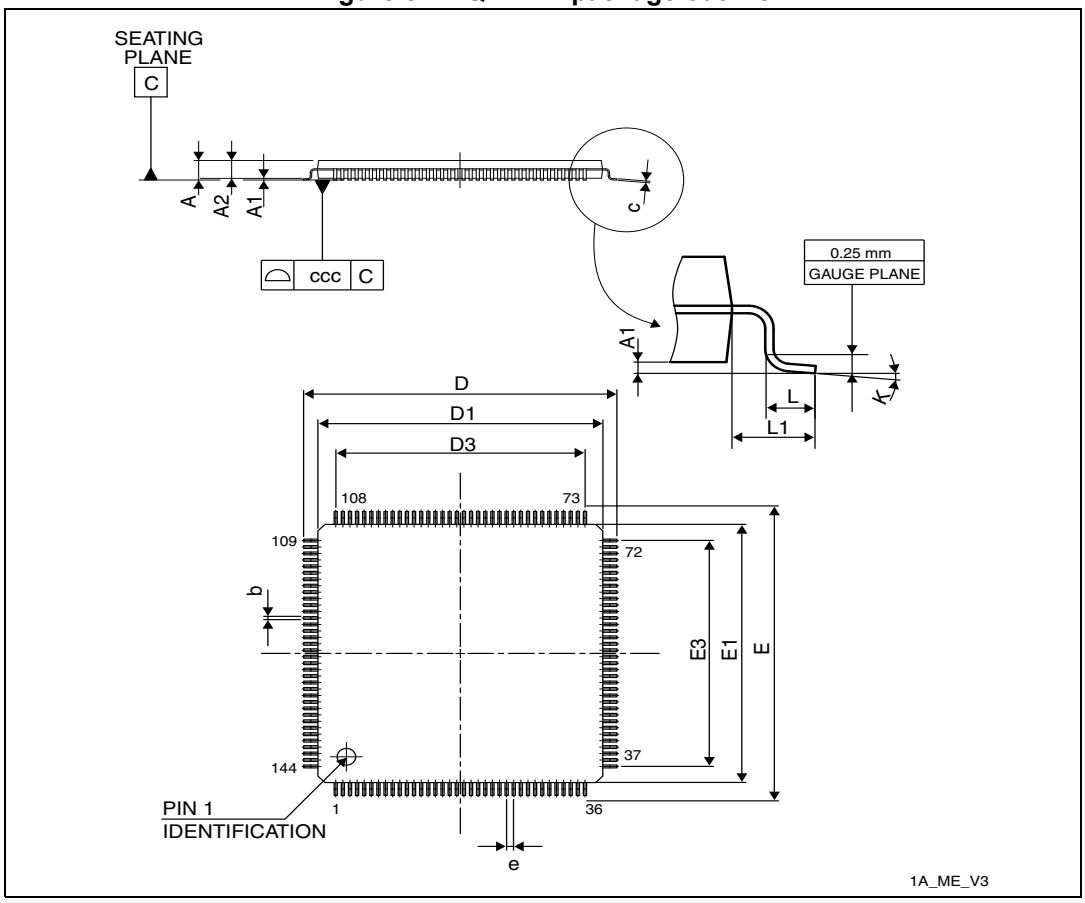

1. Drawing is not to scale.

Table 92. LQFP144 mechanical data

Symbol	millimeters			inches[1]		
	Min	Typ	Max	Min	Typ	Max
A	-	-	1.600	-	-	0.0630
A1	0.050	-	0.150	0.0020	-	0.0059
A2	1.350	1.400	1.450	0.0531	0.0551	0.0571
b	0.170	0.220	0.270	0.0067	0.0087	0.0106
c	0.090	-	0.200	0.0035	-	0.0079
D	21.800	22.000	22.200	0.8583	0.8661	0.8740
D1	19.800	20.000	20.200	0.7795	0.7874	0.7953
D3	-	17.500	-	-	0.6890	-
E	21.800	22.000	22.200	0.8583	0.8661	0.8740
E1	19.800	20.000	20.200	0.7795	0.7874	0.7953
E3	-	17.500	-	-	0.6890	-
e	-	0.500	-	-	0.0197	-
L	0.450	0.600	0.750	0.0177	0.0236	0.0295
L1	-	1.000	-	-	0.0394	-
k	0°	3.5°	7°	0°	3.5°	7°
ccc	-	-	0.080	-	-	0.0031

1. Values in inches are converted from mm and rounded to 4 decimal digits.

Figure 55. Recommended footprint for the LQFP144 package

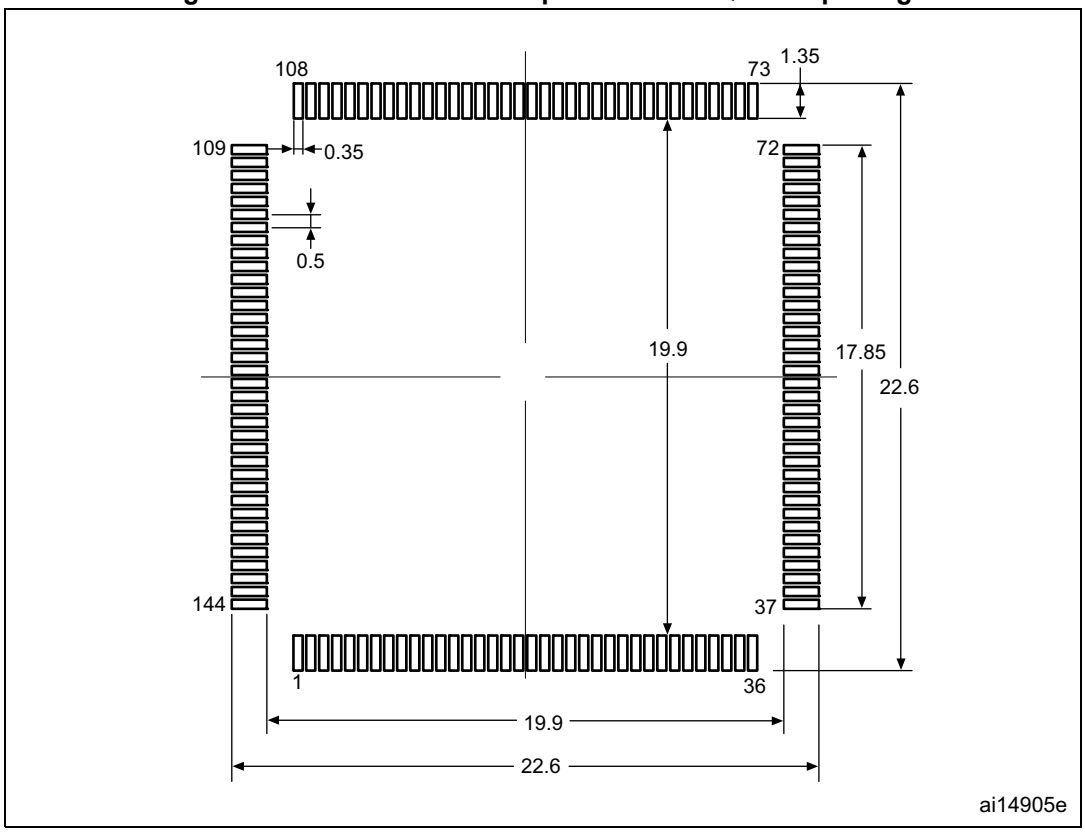

1. Drawing is not to scale.
2. Dimensions are expressed in millimeters.

Device marking for LQFP144

The following figure gives an example of topside marking orientation versus pin 1 identifier location.

Other optional marking or inset/upset marks, which identify the parts throughout supply chain operations, are not indicated below.

Figure 56. LQFP144 marking example (package top view)

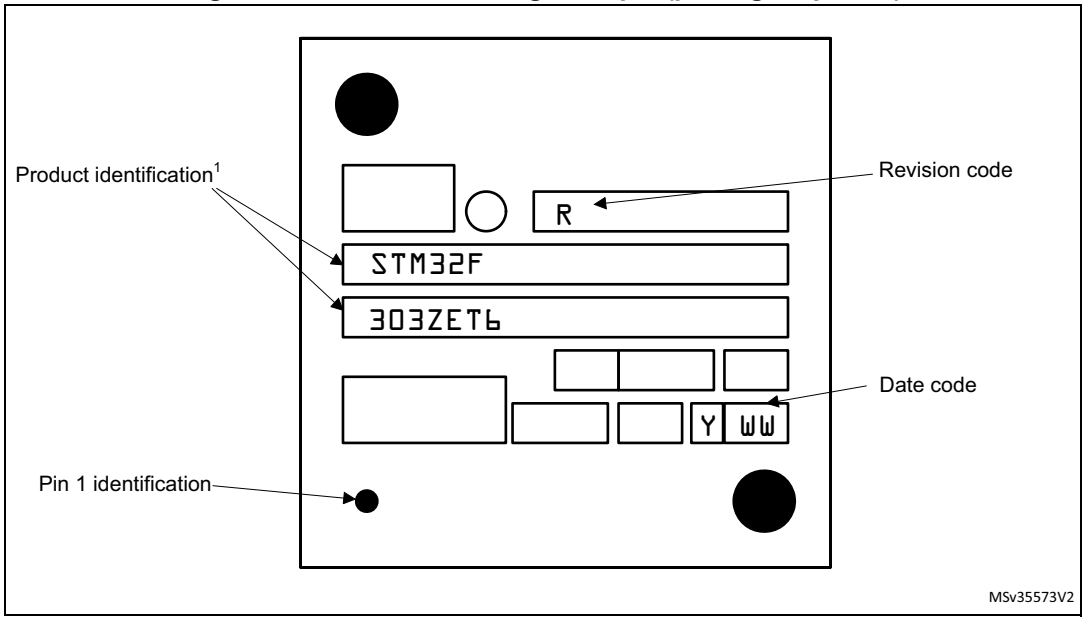

1. Parts marked as “ES”, “E” or accompanied by an Engineering Sample notification letter, are not yet qualified and therefore not yet ready to be used in production and any consequences deriving from such usage will not be at ST charge. In no event, ST will be liable for any customer usage of these engineering samples in production. ST Quality has to be contacted prior to any decision to use these Engineering samples to run qualification activity.

7.3 UFBGA100 package information

UFBGA100 is a 100-ball, 7 x 7 mm, 0.50 mm pitch, ultra fine pitch ball grid array package.

Figure 57. UFBGA100 package outline

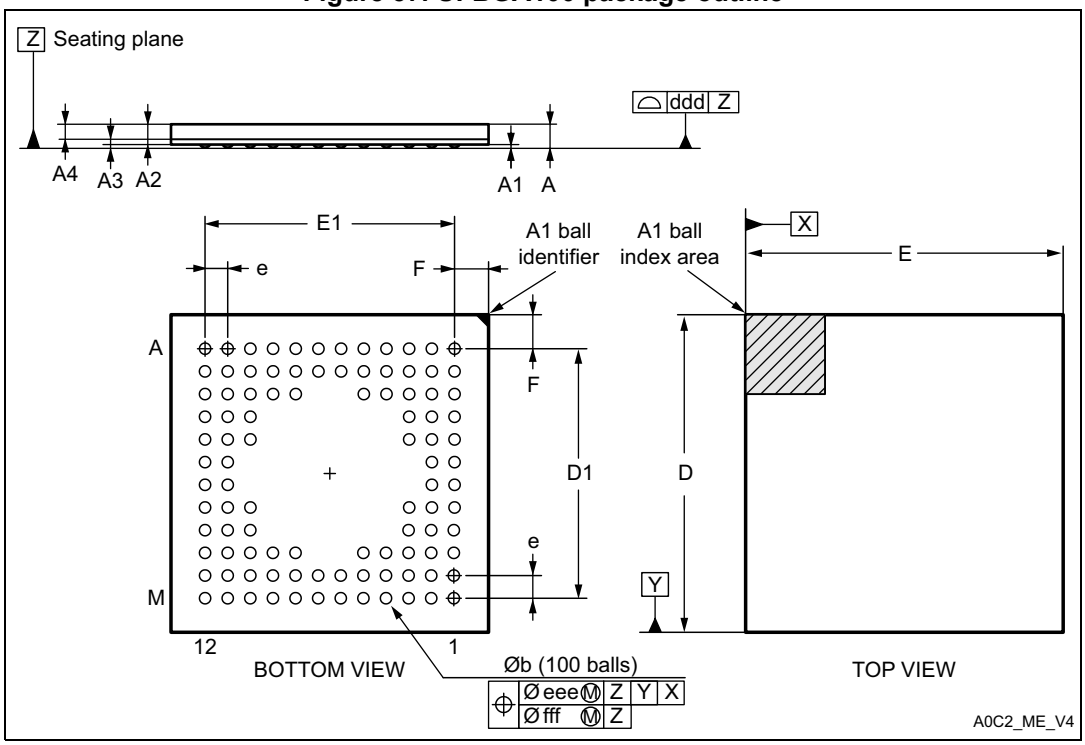

1. Drawing is not to scale.

Table 93. UFBGA100 package mechanical data

Symbol	millimeters			inches(1)		
	Min.	Typ.	Max.	Min.	Typ.	Max.
A	0.460	0.530	0.600	0.0181	0.0209	0.0236
A1	0.050	0.080	0.110	0.0020	0.0031	0.0043
A2	0.400	0.450	0.500	0.0157	0.0177	0.0197
A3	-	0.130	-	-	0.0051	-
A4	0.270	0.320	0.370	0.0106	0.0126	0.0146
b	0.200	0.250	0.300	0.0079	0.0098	0.0118
D	6.950	7.000	7.050	0.2736	0.2756	0.2776
D1	5.450	5.500	5.550	0.2146	0.2165	0.2185
E	6.950	7.000	7.050	0.2736	0.2756	0.2776
E1	5.450	5.500	5.550	0.2146	0.2165	0.2185
e	-	0.500	-	-	0.0197	-
F	0.700	0.750	0.800	0.0276	0.0295	0.0315

Table 93. UFBGA100 package mechanical data (continued)

Symbol	millimeters			inches[1]		
	Min.	Typ.	Max.	Min.	Typ.	Max.
ddd	-	-	0.100	-	-	0.0039
eee	-	-	0.150	-	-	0.0059
fff	-	-	0.050	-	-	0.0020

1. Values in inches are converted from mm and rounded to 4 decimal digits.

Figure 58. Recommended footprint for the UFBGA100 package

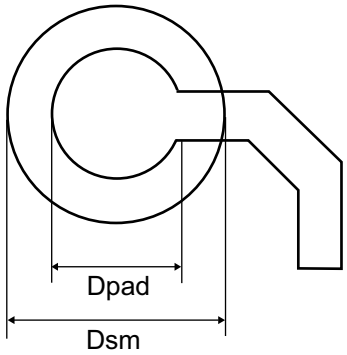

Table 94. UFBGA100 recommended PCB design rules (0.5 mm pitch BGA)

Dimension	Recommended values
Pitch	0.5
Dpad	0.27 mm
Dsm	0.35 mm typ. (depends on the soldermask registration tolerance)
Solder paste	0.27 mm aperture diameter.

Note: Non-solder mask defined (NSMD) pads are recommended.

Note: 4 to 6 mils solder paste screen printing process.

Device marking for UFBGA100

The following figure gives an example of topside marking orientation versus ball A1 identifier location.

Other optional marking or inset/upset marks, which identify the parts throughout supply chain operations, are not indicated below.

Figure 59. UFBGA100 marking example (package top view)

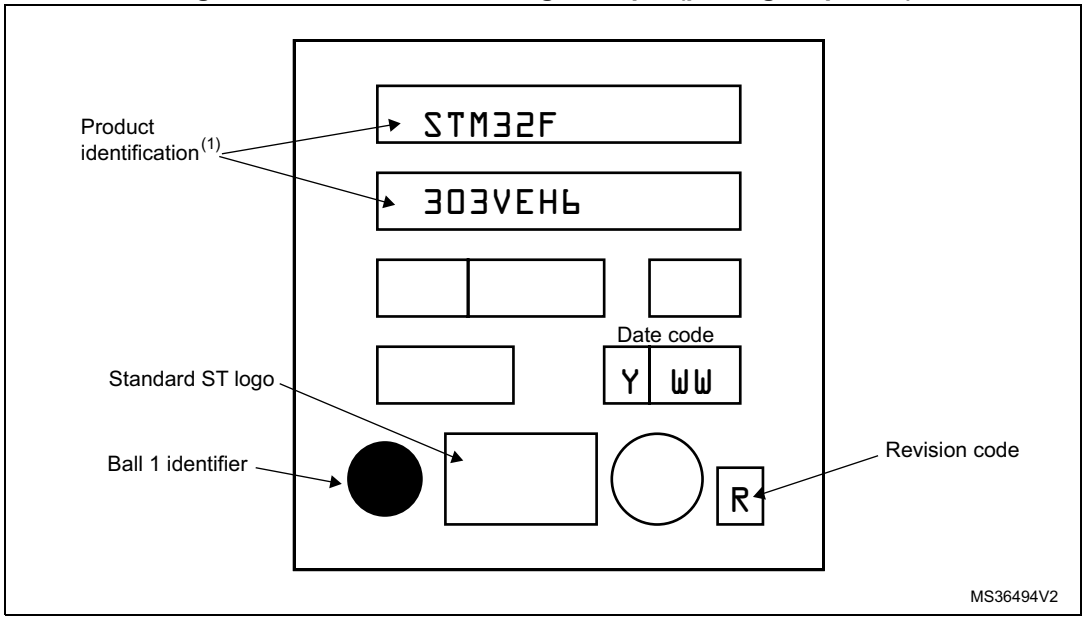

1. Parts marked as “ES”, “E” or accompanied by an Engineering Sample notification letter, are not yet qualified and therefore not yet ready to be used in production and any consequences deriving from such usage will not be at ST charge. In no event, ST will be liable for any customer usage of these engineering samples in production. ST Quality has to be contacted prior to any decision to use these Engineering samples to run qualification activity.

7.4 LQFP100 package information

LQFP100 is a 100-pin, 14 x 14 mm low-profile quad flat package.

Figure 60. LQFP100 package outline

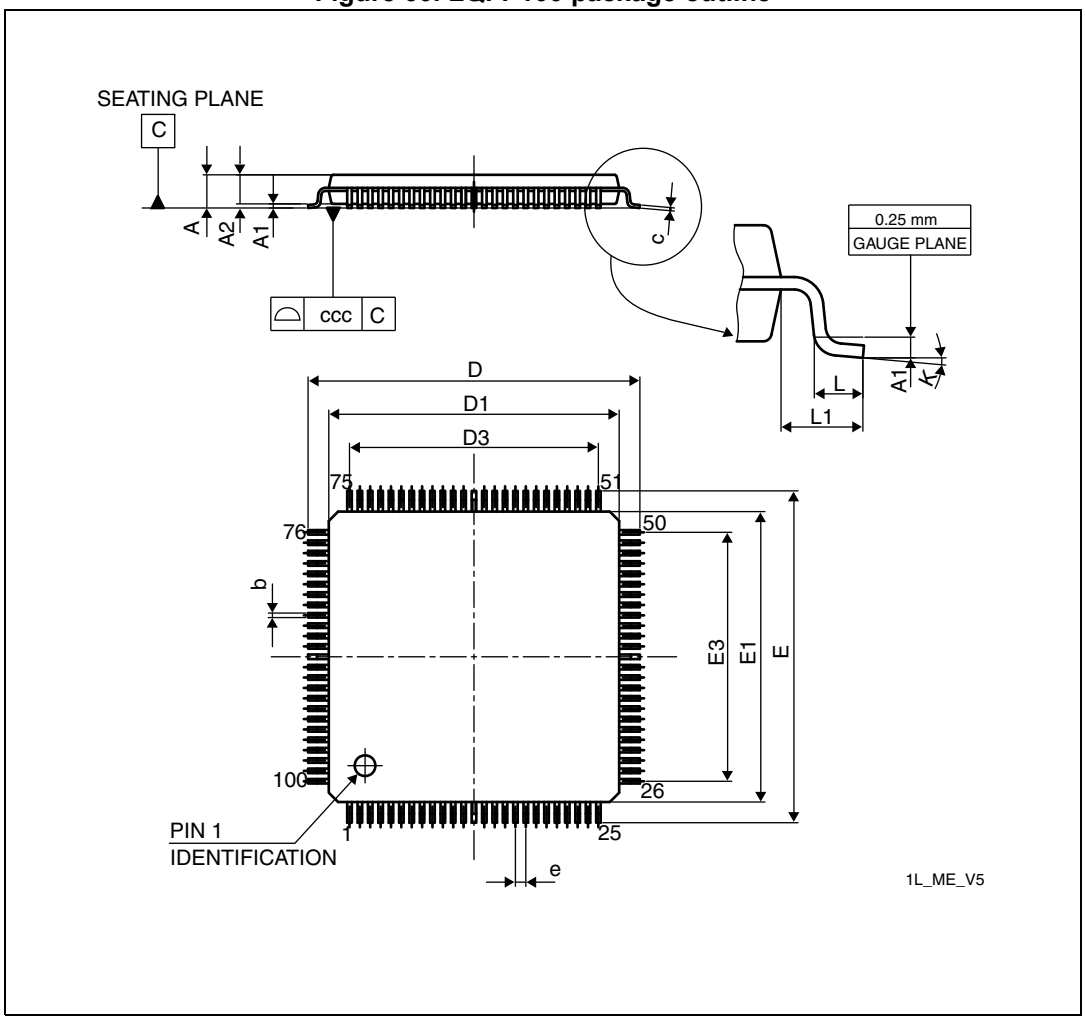

1. Drawing is not to scale.

Table 95. LQPF100 package mechanical data

Symbol	millimeters			inches(1)		
	Min	Typ	Max	Min	Typ	Max
A	-	-	1.600	-	-	0.0630
A1	0.050	-	0.150	0.0020	-	0.0059
A2	1.350	1.400	1.450	0.0531	0.0551	0.0571
b	0.170	0.220	0.270	0.0067	0.0087	0.0106
c	0.090	-	0.200	0.0035	-	0.0079
D	15.800	16.000	16.200	0.6220	0.6299	0.6378

Table 95. LQPF100 package mechanical data (continued)

Symbol	millimeters			inches[1]		
	Min	Typ	Max	Min	Typ	Max
D1	13.800	14.000	14.200	0.5433	0.5512	0.5591
D3	-	12.000	-	-	0.4724	-
E	15.800	16.000	16.200	0.6220	0.6299	0.6378
E1	13.800	14.000	14.200	0.5433	0.5512	0.5591
E3	-	12.000	-	-	0.4724	-
e	-	0.500	-	-	0.0197	-
L	0.450	0.600	0.750	0.0177	0.0236	0.0295
L1	-	1.000	-	-	0.0394	-
k	0.0°	3.5°	7.0°	0.0°	3.5°	7.0°
ccc	-	-	0.080	-	-	0.0031

1. Values in inches are converted from mm and rounded to 4 decimal digits.

Figure 61. Recommended footprint for the LQFP100 package

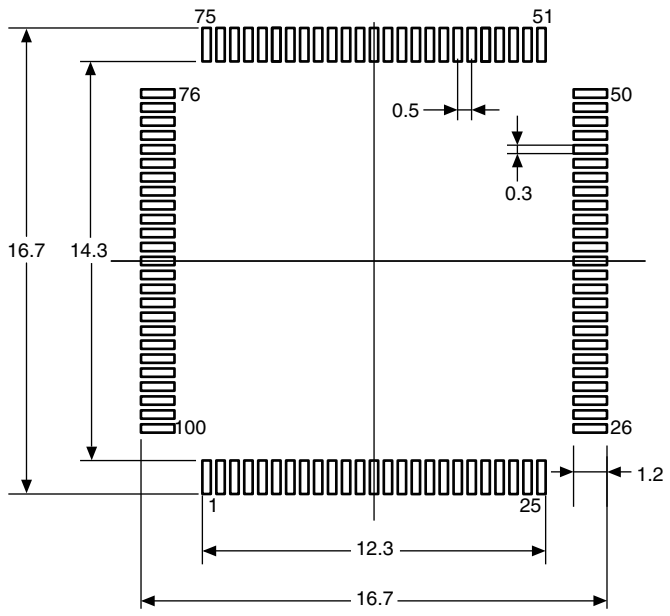

1. Drawing is not to scale.
2. Dimensions are expressed in millimeters.

Device marking for LQFP100

The following figure gives an example of topside marking orientation versus pin 1 identifier location.

Other optional marking or inset/upset marks, which identify the parts throughout supply chain operations, are not indicated below.

Figure 62. LQFP100 marking example (package top view)

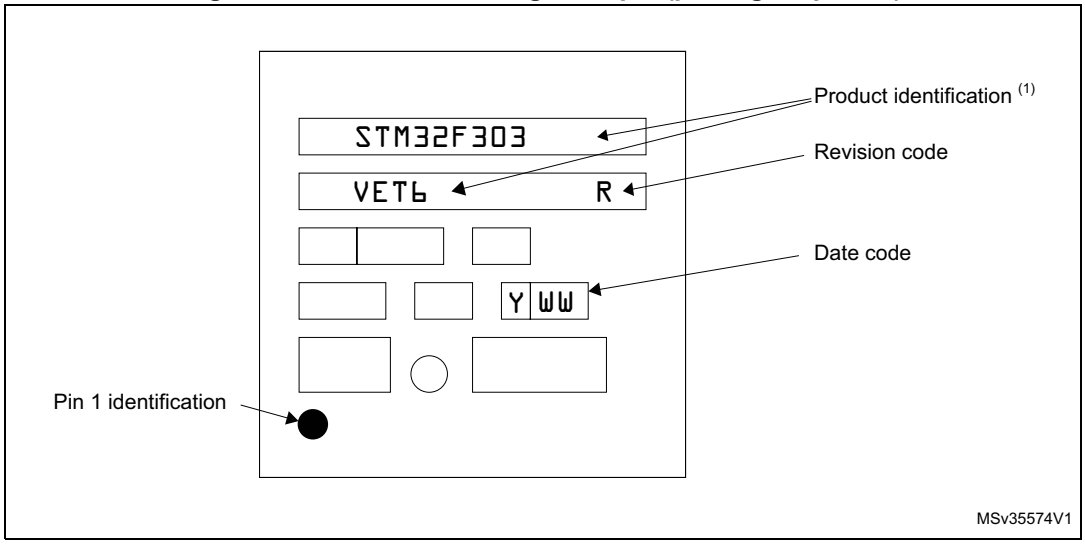

1. Parts marked as “ES”, “E” or accompanied by an Engineering Sample notification letter, are not yet qualified and therefore not yet ready to be used in production and any consequences deriving from such usage will not be at ST charge. In no event, ST will be liable for any customer usage of these engineering samples in production. ST Quality has to be contacted prior to any decision to use these Engineering samples to run qualification activity.

7.5 WLCSP100 package information

WLCSP100 is a 100-ball, 4.775 x 5.041 mm, 0.4 mm pitch wafer level chip scale package.

Figure 63.WLCSP100 package outline

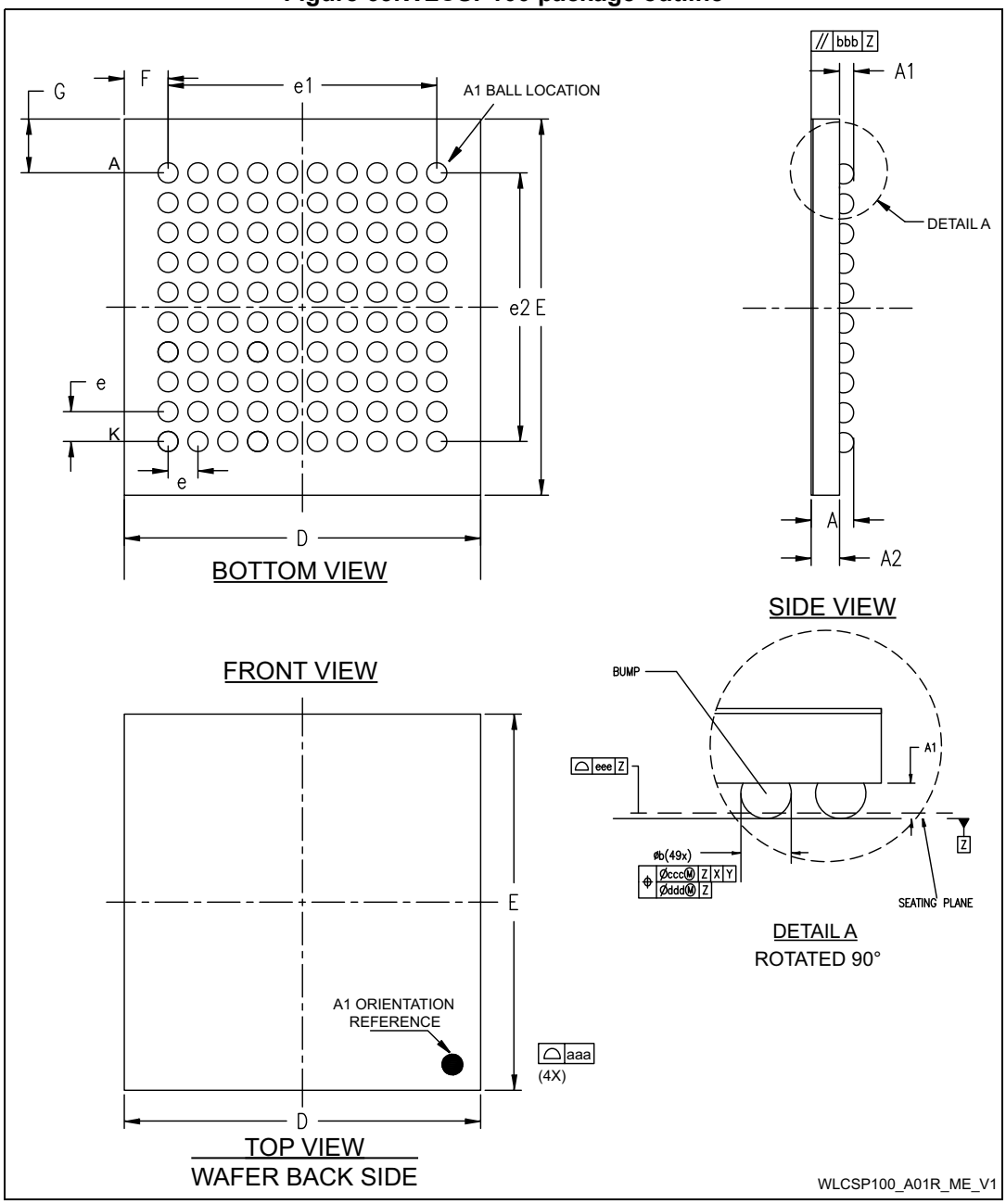

1. Drawing is not to scale.

Table 96. WLCSP100 package mechanical data

Symbol	millimeters			inches[1]		
	Min	Typ	Max	Typ	Min	Max
A	0.525	0.555	0.585	0.0207	0.0219	0.0230
A1	-	0.175	-	-	0.0069	-
A2	-	0.38	-	-	0.0150	-
A3[2]	-	0.025	-	-	0.0010	-
Ø b[3]	0.22	0.25	0.28	-	0.0098	0.0110
D	4.74	4.775	4.81	-	0.1880	0.1894
E	5.006	5.041	5.076	-	0.1985	0.1998
e	-	0.4	-	-	0.0157	-
e1	-	3.6	-	-	0.1417	-
e2	-	3.6	-	-	0.1417	-
F	-	0.5875	-	-	0.0231	-
G	-	0.7205	-	-	0.0284	-
N	-	100	-	-	3.9370	-
aaa	-	0.1	-	-	0.0039	-
bbb	-	0.1	-	-	0.0039	-
ccc	-	0.1	-	-	0.0039	-
ddd	-	0.05	-	-	0.0020	-
eee	-	0.05	-	-	0.0020	-

1. Values in inches are converted from mm and rounded to 4 decimal digits.
2. Back side coating.
3. Dimension is measured at the maximum bump diameter parallel to primary datum Z.

Figure 64. Recommended footprint for the WLCSP100 package

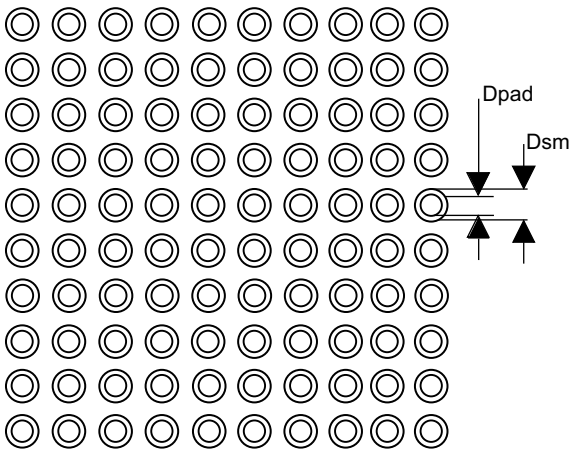

Table 97. WLCSP100 recommended PCB design rules (0.4 mm pitch)

Dimension	Recommended values
Pitch	0.4 mm
Dpad	0.225 mm
Dsm	0.290 mm
Stencil thickness	0.1 mm

Device marking for WLCSP100

The following figure gives an example of topside marking orientation versus pin 1 identifier location.

Other optional marking or inset/upset marks, which identify the parts throughout supply chain operations, are not indicated below.

Figure 65. WLCSP100 marking example (package top view)

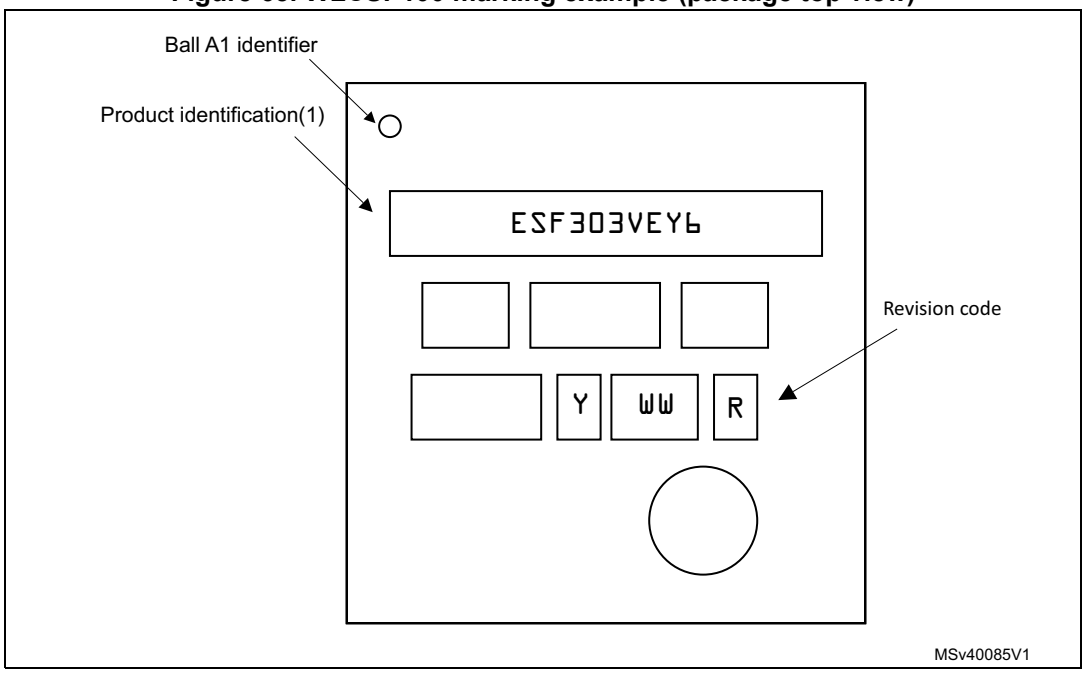

1. Parts marked as “ES”, “E” or accompanied by an Engineering Sample notification letter, are not yet qualified and therefore not yet ready to be used in production and any consequences deriving from such usage will not be at ST charge. In no event, ST will be liable for any customer usage of these engineering samples in production. ST Quality has to be contacted prior to any decision to use these Engineering samples to run qualification activity.

7.6 LQFP64 package information

LQFP64 is a 64-pin, 10 x 10 mm low-profile quad flat package.

Figure 66. LQFP64 package outline

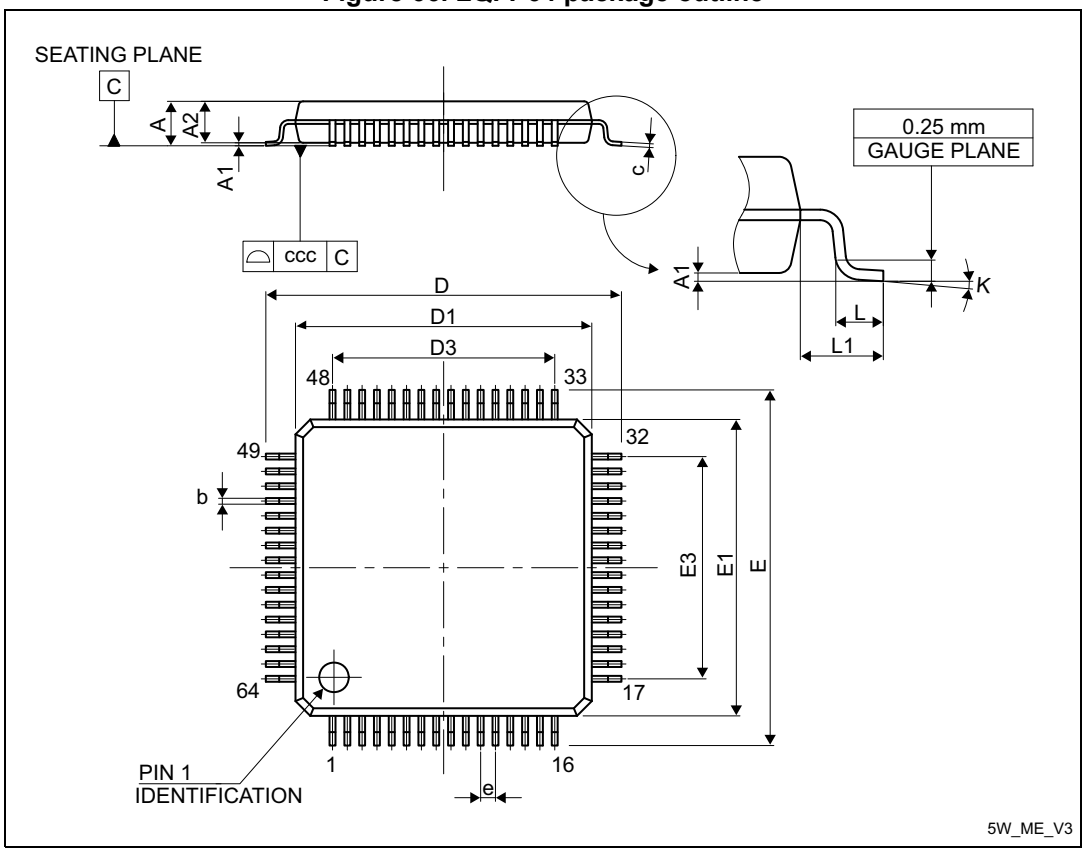

1. Drawing is not to scale.

Table 98. LQFP64 package mechanical data

Symbol	millimeters			inches[1]		
	Min	Typ	Max	Min	Typ	Max
A	-	-	1.600	-	-	0.0630
A1	0.050	-	0.150	0.0020	-	0.0059
A2	1.350	1.400	1.450	0.0531	0.0551	0.0571
b	0.170	0.220	0.270	0.0067	0.0087	0.0106
c	0.090	-	0.200	0.0035	-	0.0079
D	-	12.000	-	-	0.4724	-
D1	-	10.000	-	-	0.3937	-
D3	-	7.500	-	-	0.2953	-
E	-	12.000	-	-	0.4724	-
E1	-	10.000	-	-	0.3937	-

Table 98. LQFP64 package mechanical data (continued)

Symbol	millimeters			inches[1]		
	Min	Typ	Max	Min	Typ	Max
E3	-	7.500	-	-	0.2953	-
e	-	0.500	-	-	0.0197	-
θ	0°	3.5°	7°	0°	3.5°	7°
L	0.450	0.600	0.750	0.0177	0.0236	0.0295
L1	-	1.000	-	-	0.0394	-
ccc	-	-	0.080	-	-	0.0031

1. Values in inches are converted from mm and rounded to 4 decimal digits.

Figure 67. Recommended footprint for the LQFP64 package

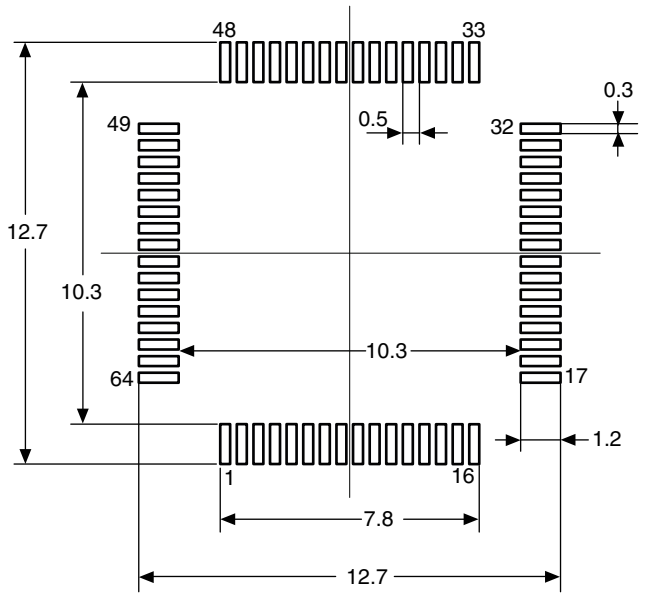

1. Dimensions are expressed in millimeters.

Device marking for LQFP64

The following figure gives an example of topside marking orientation versus pin 1 identifier location.

Other optional marking or inset/upset marks, which identify the parts throughout supply chain operations, are not indicated below.

Figure 68. LQFP64 marking example (package top view)

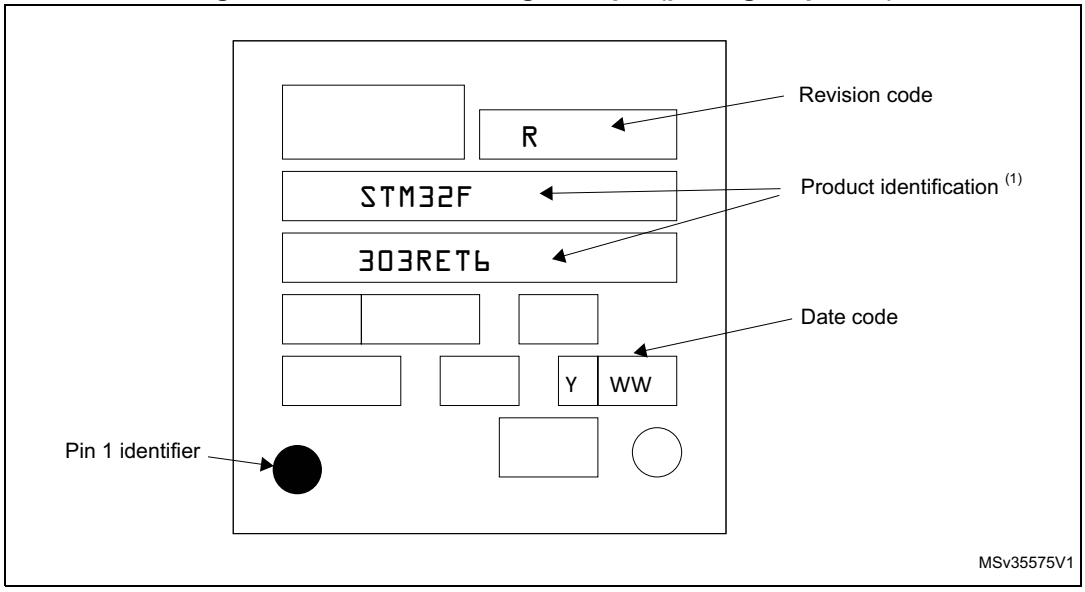

1. Parts marked as “ES”, “E” or accompanied by an Engineering Sample notification letter, are not yet qualified and therefore not yet ready to be used in production and any consequences deriving from such usage will not be at ST charge. In no event, ST will be liable for any customer usage of these engineering samples in production. ST Quality has to be contacted prior to any decision to use these Engineering samples to run qualification activity.

7.7 Thermal characteristics

The maximum chip junction temperature ($T_J$max) must never exceed the values given in *Table 19: General operating conditions*.

The maximum chip-junction temperature, T_J max, in degrees Celsius, may be calculated using the following equation:

$$T_J \text{ max} = T_A \text{ max} + (P_D \text{ max x } \Theta_{JA})$$

Where:

- T_A max is the maximum temperature in °C,
- Θ_{JA} is the package junction-to- thermal resistance, in ° C/W,
- P_D max is the sum of P_{INT} max and $P_{I/O}$ max (P_D max = P_{INT} max + $P_{I/O}$max),
- P_{INT} max is the product of I_{DD} and V_{DD}, expressed in Watts. This is the maximum chip internal power.

$P_{I/O}$ max represents the maximum power dissipation on output pins where:

$$P_{I/O} \text{ max} = \Sigma (V_{OL} \times I_{OL}) + \Sigma ((V_{DD} - V_{OH}) \times I_{OH}),$$

taking into account the actual V_{OL} / I_{OL} and V_{OH} / I_{OH} of the I/Os at low and high level in the application.

Table 99. Package thermal characteristics

Symbol	Parameter	Value	Unit
Θ_{JA}	**Thermal resistance junction-** LQFP144 - 20 × 20 mm	33	°C/W
	Thermal resistance junction- UFBGA100 - 7 × 7 mm	59	
	Thermal resistance junction- LQFP100 - 14 × 14 mm	42	
	Thermal resistance junction- WLCSP100 - 0.4 mm pitch	44	
	Thermal resistance junction- LQFP64 - 10 × 10 mm / 0.5 mm pitch	46	

7.7.1 Reference document

JESD51-2 Integrated Circuits Thermal Test Method Environment Conditions - Natural Convection (Still Air). Available from www.jedec.org

7.7.2 Selecting the product temperature range

When ordering the microcontroller, the temperature range is specified in the ordering information scheme shown in *Section 8: Part numbering*.

Each temperature range suffix corresponds to a specific guaranteed temperature at maximum dissipation and to a specific maximum junction temperature.

As applications do not commonly use the STM32F303xD/E at maximum dissipation, it is useful to calculate the exact power consumption and junction temperature to determine which temperature range is best suited to the application.

The following examples show how to calculate the temperature range needed for a given application.

Example 1: High-performance application

Assuming the following application conditions:

Maximum temperature T_{Amax} = 82 °C (measured according to JESD51-2), I_{DDmax} = 50 mA, V_{DD} = 3.5 V, maximum 20 I/Os used at the same time in output at low level with I_{OL} = 8 mA, V_{OL}= 0.4 V and maximum 8 I/Os used at the same time in output at low level with I_{OL} = 20 mA, V_{OL}= 1.3 V

P_{INTmax} = 50 mA × 3.5 V= 175 mW

P_{IOmax} = 20 × 8 mA × 0.4 V + 8 × 20 mA × 1.3 V = 272 mW

This gives: P_{INTmax} = 175 mW and P_{IOmax} = 272 mW:

P_{Dmax} = 175 + 272 = 447 mW

Using the values obtained in *Table 99* T_{Jmax} is calculated as follows:

– For LQFP100, 42 °C/W

T_{Jmax} = 82 °C + (42 °C/W × 447 mW) = 82 °C + 18.774 °C = 100.774 °C

This is within the range of the suffix 6 version parts (–40 < T_J < 105 °C).

In this case, parts must be ordered at least with the temperature range suffix 6 (see *Section 8: Part numbering*).

Note: With this given P_{Dmax} we can find the T_{Amax} allowed for a given device temperature range (order code suffix 6 or 7).

Suffix 6: T_{Amax} = T_{Jmax} - (42°C/W × 447 mW) = 105-18.774 = 86.226 °C

Suffix 7: T_{Amax} = T_{Jmax} - (42°C/W × 447 mW) = 125-18.774 = 106.226 °C

Example 2: High-temperature application

Using the same rules, it is possible to address applications that run at high temperature with a low dissipation, as long as junction temperature T_J remains within the specified range.

Assuming the following application conditions:

Maximum temperature T_{Amax} = 100 °C (measured according to JESD51-2), I_{DDmax} = 20 mA, V_{DD} = 3.5 V, maximum 20 I/Os used at the same time in output at low level with I_{OL} = 8 mA, V_{OL}= 0.4 V

P_{INTmax} = 20 mA × 3.5 V= 70 mW

P_{IOmax} = 20 × 8 mA × 0.4 V = 64 mW

This gives: P_{INTmax} = 70 mW and P_{IOmax} = 64 mW:

P_{Dmax} = 70 + 64 = 134 mW

Thus: P_{Dmax} = 134 mW

Using the values obtained in *Table 99* T_{Jmax} is calculated as follows:

– For LQFP100, 42 °C/W

T_{Jmax} = 100 °C + (42 °C/W × 134 mW) = 100 °C + 5.628 °C = 105.628 °C

This is above the range of the suffix 6 version parts (–40 < T_J < 105 °C).

In this case, parts must be ordered at least with the temperature range suffix 7 (see *Section 8: Part numbering*) unless we reduce the power dissipation to be able to use suffix 6 parts.

Refer to *Figure 69* to select the required temperature range (suffix 6 or 7) according to your temperature or power requirements.

Figure 69. LQFP100 P_D max vs. T_A

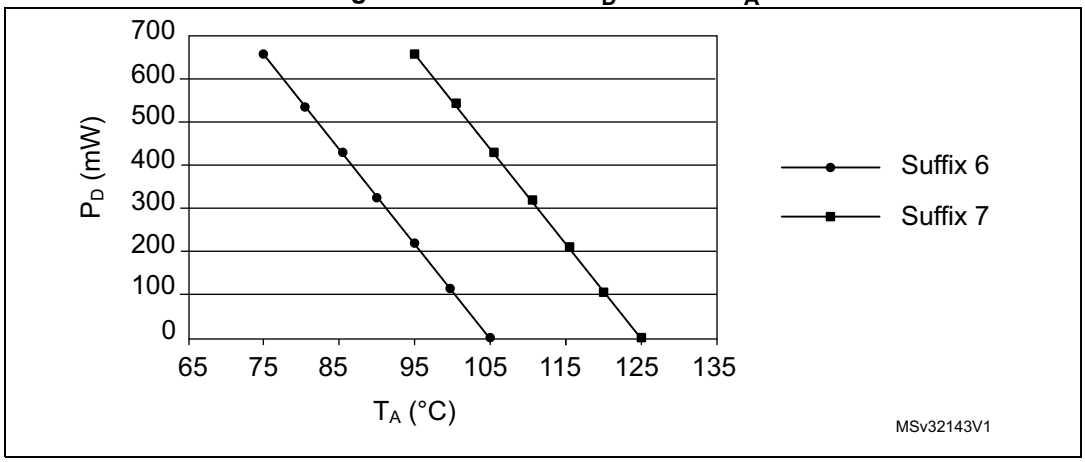

8 Part numbering

For a list of available options (memory, package, and so on) or for further information on any aspect of this device, contact the nearest ST sales office.

Table 100. Ordering information scheme

Example: STM32 F 303 V E T 6 x

Device family

STM32 = ARM-based 32-bit microcontroller

Product type

F = General-purpose

Sub-family

303 = STM32F303xx

Pin count

R = 64 pins

V = 100 pins

Z = 144 pins

Code size

D = 384 Kbytes of Flash memory

E = 512 Kbytes of Flash memory

Package

H = UFBGA

T = LQFP

Y = WLCSP

Temperature range

6 = –40 to 85 °C

7 = –40 to 105 °C

Options

xxx = programmed parts

TR = tape and reel

9 Revision history

Table 101. Document revision history

Date	Revision	Changes
20-Jan-2015	1	Initial release.
30-Jan-2015	2	Updated: – *Table 13: STM32F303xD/E pin definitions* – *Table 14: STM32F303xD/E alternate function mapping* – *Table 38: HSE oscillator characteristics* – *Figure 56: LQFP144 marking example (package top view)* – *Figure 62: LQFP100 marking example (package top view)*
03-Mar-2015	3	Added USB_DM and USB_DP as additional function to PA11 and PA12 description, respectively in *Table 13: STM32F303xD/E pin definitions*. Updated: – *Figure 56: LQFP144 marking example (package top view)*, – *Figure 59: UFBGA100 marking example (package top view)*, – *Figure 62: LQFP100 marking example (package top view)*.
08-Dec-2015	4	Renamed: – FMC as FSMC, – CCM RAM as CCM SRAM. Removed: – *table: I2C timings specification* and *Figure: I2C bus AC waveforms and measurement circuit* in *Section : I2C interface characteristics*. – Added package information for WLCSP100 in *Section 7: Package information*.
21-Oct-2016	5	Updated: *Table 2: STM32F303xD/E family device features and peripheral counts*, *Section 3.17: Ultra-fast comparators (COMP)*, *Table 66: DAC characteristics*, *Table 61: ADC characteristics*, *Table 13: STM32F303xD/E pin definitions*, *Table 14: STM32F303xD/E alternate function mapping*, *Figure 41: Recommended NRST pin protection* Added: *Table 37: Wakeup time using USART*.

IMPORTANT NOTICE – PLEASE READ CAREFULLY

STMicroelectronics NV and its subsidiaries (“ST”) reserve the right to make changes, corrections, enhancements, modifications, and improvements to ST products and/or to this document at any time without notice. Purchasers should obtain the latest relevant information on ST products before placing orders. ST products are sold pursuant to ST’s terms and conditions of sale in place at the time of order acknowledgement.

Purchasers are solely responsible for the choice, selection, and use of ST products and ST assumes no liability for application assistance or the design of Purchasers’ products.

No license, express or implied, to any intellectual property right is granted by ST herein.

Resale of ST products with provisions different from the information set forth herein shall void any warranty granted by ST for such product.

ST and the ST logo are trademarks of ST. All other product or service names are the property of their respective owners.

Information in this document supersedes and replaces information previously supplied in any prior versions of this document.

© 2016 STMicroelectronics – All rights reserved