STM32G031x4/x6/x8

Arm® Cortex®-M0+ 32-bit MCU, up to 64 KB Flash, 8 KB RAM, 2x USART, timers, ADC, comm. I/Fs, 1.7-3.6 V

Datasheet - production data

Features

- Includes ST state-of-the-art patented technology
- Core: Arm® 32-bit Cortex®-M0+ CPU, frequency up to 64 MHz
- -40°C to 85°C/105°C/125°C operating temperature
- Memories
  - Up to 64 Kbytes of flash memory with protection and securable area
  - 8 Kbytes of SRAM with HW parity check
- CRC calculation unit
- Reset and power management
  - Voltage range: 1.7 V to 3.6 V
  - Power-on/Power-down reset (POR/PDR)
  - Programmable Brownout reset (BOR)
  - Programmable voltage detector (PVD)
  - Low-power modes: Sleep, Stop, Standby, Shutdown
  - V_{BAT} supply for RTC and backup registers
- Clock management
  - 4 to 48 MHz crystal oscillator
  - 32 kHz crystal oscillator with calibration
  - Internal 16 MHz RC with PLL option (±1 %)
  - Internal 32 kHz RC oscillator (±5 %)
- Up to 44 fast I/Os
  - All mappable on external interrupt vectors
  - Multiple 5 V-tolerant I/Os
- 5-channel DMA controller with flexible mapping
- 12-bit, 0.4 µs ADC (up to 16 ext. channels)
  - Up to 16-bit with hardware oversampling
  - Conversion range: 0 to 3.6V
- 11 timers (one 128 MHz capable): 16-bit for advanced motor control, one 32-bit and four 16-bit general-purpose, two low-power 16-bit, two watchdogs, SysTick timer
- Calendar RTC with alarm and periodic wakeup from Stop/Standby/Shutdown

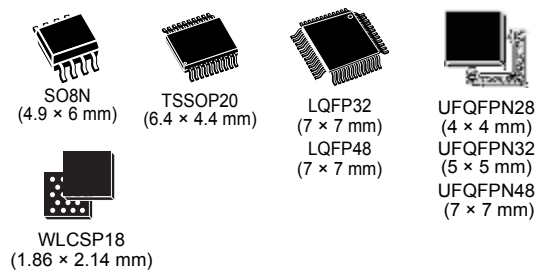

- Communication interfaces
  - Two I^2C-bus interfaces supporting Fast-mode Plus (1 Mbit/s) with extra current sink, one supporting SMBus/PMBus and wakeup from Stop mode
  - Two USARTs with master/slave synchronous SPI; one supporting ISO7816 interface, LIN, IrDA capability, auto baud rate detection and wakeup feature
  - One low-power UART
  - Two SPIs (32 Mbit/s) with 4- to 16-bit programmable bitframe, one multiplexed with I^2S interface; two extra SPIs through USARTs
- Development support: serial wire debug (SWD)
- 96-bit unique ID
- All packages ECOPACK 2 compliant

Table 1. Device summary

Reference	Part number
STM32G031x4	STM32G031C4, STM32G031F4, STM32G031G4, STM32G031K4, STM32G031J4
STM32G031x6	STM32G031C6, STM32G031F6, STM32G031G6, STM32G031K6, STM32G031J6
STM32G031x8	STM32G031C8, STM32G031F8, STM32G031G8, STM32G031K8, STM32G031Y8

This is information on a product in full production. www.st.com

Contents

1 Introduction 9

2 Description 10

3 Functional overview 13

3.1 Arm® Cortex®-M0+ core with MPU 13

3.2 Memory protection unit 13

3.3 Embedded flash memory 13

3.3.1 Securable area 14

3.4 Embedded SRAM 15

3.5 Boot modes 15

3.6 Cyclic redundancy check calculation unit (CRC) 15

3.7 Power supply management 16

3.7.1 Power supply schemes 16

3.7.2 Power supply supervisor 17

3.7.3 Voltage regulator 17

3.7.4 Low-power modes 18

3.7.5 Reset mode 19

3.7.6 VBAT operation 19

3.8 Interconnect of peripherals 19

3.9 Clocks and startup 20

3.10 General-purpose inputs/outputs (GPIOs) 21

3.11 Direct memory access controller (DMA) 21

3.12 DMA request multiplexer (DMAMUX) 22

3.13 Interrupts and events 22

3.13.1 Nested vectored interrupt controller (NVIC) 23

3.13.2 Extended interrupt/event controller (EXTI) 23

3.14 Analog-to-digital converter (ADC) 23

3.14.1 Temperature sensor 24

3.14.2 Internal voltage reference (V_{REFINT}) 24

3.14.3 V_{BAT} battery voltage monitoring 25

3.15 Voltage reference buffer (VREFBUF) 25

3.16 Timers and watchdogs 25

3.16.1 Advanced-control timer (TIM1) 26
3.16.2 General-purpose timers (TIM2, 3, 14, 16, 17) 26
3.16.3 Low-power timers (LPTIM1 and LPTIM2) 27
3.16.4 Independent watchdog (IWDG) 27
3.16.5 System window watchdog (WWDG) 27
3.16.6 SysTick timer 28
3.17 Real-time clock (RTC), tamper (TAMP) and backup registers 28
3.18 Inter-integrated circuit interface (I^2C) 29
3.19 Universal synchronous/asynchronous receiver transmitter (USART) . . . 30
3.20 Low-power universal asynchronous receiver transmitter (LPUART) 30
3.21 Serial peripheral interface (SPI) 31
3.22 Development support 31
3.22.1 Serial wire debug port (SW-DP) 31

4 Pinouts, pin description and alternate functions 32

5 Electrical characteristics 43
5.1 Parameter conditions 43
5.1.1 Minimum and maximum values 43
5.1.2 Typical values 43
5.1.3 Typical curves 43
5.1.4 Loading capacitor 43
5.1.5 Pin input voltage 43
5.1.6 Power supply scheme 44
5.1.7 Current consumption measurement 45
5.2 Absolute maximum ratings 45
5.3 Operating conditions 46
5.3.1 General operating conditions 46
5.3.2 Operating conditions at power-up / power-down 47
5.3.3 Embedded reset and power control block characteristics 47
5.3.4 Embedded voltage reference 48
5.3.5 Supply current characteristics 49
5.3.6 Wakeup time from low-power modes and voltage scaling transition times 58
5.3.7 External clock source characteristics 60
5.3.8 Internal clock source characteristics 64

5.3.9 PLL characteristics . . . 66
5.3.10 Flash memory characteristics . . . 66
5.3.11 EMC characteristics . . . 67
5.3.12 Electrical sensitivity characteristics . . . 69
5.3.13 I/O current injection characteristics . . . 69
5.3.14 I/O port characteristics . . . 71
5.3.15 NRST input characteristics . . . 76
5.3.16 Extended interrupt and event controller input (EXTI) characteristics . . . 77
5.3.17 Analog switch booster . . . 77
5.3.18 Analog-to-digital converter characteristics . . . 78
5.3.19 Voltage reference buffer characteristics . . . 85
5.3.20 Temperature sensor characteristics . . . 86
5.3.21 V_{BAT} monitoring characteristics . . . 86
5.3.22 Timer characteristics . . . 86
5.3.23 Characteristics of communication interfaces . . . 87

6 Package information . . . 96
6.1 Device marking . . . 96
6.2 SO8N package information (O7) . . . 96
6.3 WLCSP18 package information (B06E) . . . 99
6.4 TSSOP20 package information (YA) . . . 102
6.5 UFQFPN28 package information (A0B0) . . . 104
6.6 LQFP32 package information (5V) . . . 106
6.7 UFQFPN32 package information (A0B8) . . . 110
6.8 LQFP48 package information (5B) . . . 114
6.9 UFQFPN48 package information (A0B9) . . . 117
6.10 Thermal characteristics . . . 119
6.10.1 Reference document . . . 120
6.10.2 Selecting the product temperature range . . . 120

7 Ordering information . . . 122

8 Important security notice . . . 123

9 Revision history . . . 124

List of tables

Table 1. Device summary . . . 1
Table 2. STM32G031x4/x6/x8 device features and peripheral counts . . . 11
Table 3. Access status versus readout protection level and execution modes. . . . 14
Table 4. Interconnect of peripherals . . . 20
Table 5. Temperature sensor calibration values. . . . 24
Table 6. Internal voltage reference calibration values . . . 25
Table 7. Timer feature comparison. . . . 25
Table 8. I^2C implementation . . . 29
Table 9. USART implementation . . . 30
Table 10. SPI/I2S implementation . . . 31
Table 11. Terms and symbols used in *Pin assignment and description* table . . . 35
Table 12. Pin assignment and description . . . 36
Table 13. Port A alternate function mapping . . . 40
Table 14. Port B alternate function mapping . . . 41
Table 15. Port C alternate function mapping . . . 42
Table 16. Port D alternate function mapping . . . 42
Table 17. Port F alternate function mapping. . . . 42
Table 18. Voltage characteristics . . . 45
Table 19. Current characteristics . . . 45
Table 20. Thermal characteristics. . . . 46
Table 21. General operating conditions . . . 46
Table 22. Operating conditions at power-up / power-down . . . 47
Table 23. Embedded reset and power control block characteristics. . . . 47
Table 24. Embedded internal voltage reference. . . . 48
Table 25. Current consumption in Run and Low-power run modes at different die temperatures . . . 50
Table 26. Typical current consumption in Run and Low-power run modes, depending on code executed . . . 52
Table 27. Current consumption in Sleep and Low-power sleep modes . . . 53
Table 28. Current consumption in Stop 0 mode . . . 53
Table 29. Current consumption in Stop 1 mode . . . 54
Table 30. Current consumption in Standby mode . . . 54
Table 31. Current consumption in Shutdown mode . . . 55
Table 32. Current consumption in VBAT mode . . . 55
Table 33. Current consumption of peripherals . . . 57
Table 34. Low-power mode wakeup times . . . 58
Table 35. Regulator mode transition times . . . 59
Table 36. Wakeup time using LPUART . . . 59
Table 37. High-speed external user clock characteristics. . . . 60
Table 38. Low-speed external user clock characteristics . . . 60
Table 39. HSE oscillator characteristics . . . 61
Table 40. LSE oscillator characteristics (f_{LSE} = 32.768 kHz) . . . 63
Table 41. HSI16 oscillator characteristics. . . . 64
Table 42. LSI oscillator characteristics . . . 65
Table 43. PLL characteristics . . . 66
Table 44. Flash memory characteristics . . . 66
Table 45. Flash memory endurance and data retention . . . 67
Table 46. EMS characteristics . . . 68

Table 47. EMI characteristics . . . 68
Table 48. ESD absolute maximum ratings . . . 69
Table 49. Electrical sensitivity . . . 69
Table 50. I/O current injection susceptibility . . . 70
Table 51. I/O static characteristics . . . 71
Table 52. Input characteristics of FT_e I/Os . . . 72
Table 53. Output voltage characteristics . . . 74
Table 54. Non-FT_c I/O output timing characteristics . . . 74
Table 55. FT_c I/O output timing characteristics . . . 75
Table 56. NRST pin characteristics . . . 76
Table 57. EXTI input characteristics . . . 77
Table 58. Analog switch booster characteristics . . . 77
Table 59. ADC characteristics . . . 78
Table 60. Maximum ADC R_{AIN} . . . 80
Table 61. ADC accuracy . . . 81
Table 62. VREFBUF characteristics . . . 85
Table 63. TS characteristics . . . 86
Table 64. V_{BAT} monitoring characteristics . . . 86
Table 65. V_{BAT} charging characteristics . . . 86
Table 66. TIMx characteristics . . . 87
Table 67. IWDG min/max timeout period at 32 kHz LSI clock . . . 87
Table 68. Minimum I2CCLK frequency . . . 88
Table 69. I2C analog filter characteristics . . . 88
Table 70. SPI characteristics . . . 89
Table 71. I^2S characteristics . . . 91
Table 72. USART characteristics in SPI mode . . . 93
Table 73. SO8N -Mechanical data . . . 96
Table 74. WLCSP18 - Mechanical data . . . 99
Table 75. WLCSP18 - Recommended PCB design rules . . . 101
Table 76. TSSOP20 – Mechanical data . . . 102
Table 77. UFQFPN28 – Mechanical data . . . 104
Table 78. LQFP32 - Mechanical data . . . 107
Table 79. UFQFPN32 - Mechanical data . . . 111
Table 80. Tolerance of form and position . . . 111
Table 81. LQFP48 - Mechanical data . . . 115
Table 82. UFQFPN48 – Mechanical data . . . 118
Table 83. Package thermal characteristics . . . 119
Table 84. Document revision history . . . 124

List of figures

Figure 1. Block diagram . . . 12
Figure 2. Power supply overview . . . 17
Figure 3. STM32G031Jx SO8N pinout . . . 32
Figure 4. STM32G031Yx WLCSP18 ballout . . . 32
Figure 5. STM32G031Fx TSSOP20 pinout . . . 32
Figure 6. STM32G031GxU UFQFPN28 pinout . . . 33
Figure 7. STM32G031KxT LQFP32 pinout . . . 33
Figure 8. STM32G031KxU UFQFPN32 pinout . . . 34
Figure 9. STM32G031CxT LQFP48 pinout . . . 34
Figure 10. STM32G031CxU UFQFPN48 pinout . . . 35
Figure 11. Pin loading conditions . . . 43
Figure 12. Pin input voltage . . . 43
Figure 13. Power supply scheme . . . 44
Figure 14. Current consumption measurement scheme . . . 45
Figure 15. V_{REFINT} vs. temperature . . . 49
Figure 16. High-speed external clock source AC timing diagram . . . 60
Figure 17. Low-speed external clock source AC timing diagram . . . 61
Figure 18. Typical application with an 8 MHz crystal . . . 63
Figure 19. Typical application with a 32.768 kHz crystal . . . 64
Figure 20. HSI16 frequency vs. temperature . . . 65
Figure 21. I/O input characteristics . . . 72
Figure 22. Current injection into FT_e input with diode active . . . 73
Figure 23. I/O AC characteristics definition . . . 76
Figure 24. Recommended NRST pin protection . . . 77
Figure 25. ADC accuracy characteristics . . . 84
Figure 26. ADC typical connection diagram . . . 84
Figure 27. SPI timing diagram - slave mode and CPHA = 0 . . . 90
Figure 28. SPI timing diagram - slave mode and CPHA = 1 . . . 90
Figure 29. SPI timing diagram - master mode . . . 91
Figure 30. I^2S slave timing diagram (Philips protocol) . . . 92
Figure 31. I^2S master timing diagram (Philips protocol) . . . 93
Figure 32. USART timing diagram in SPI master mode . . . 94
Figure 33. USART timing diagram in SPI slave mode . . . 95
Figure 34. SO8N -Outline . . . 96
Figure 35. SO8N - Footprint example . . . 98
Figure 36. WLCSP18 - Outline . . . 99
Figure 37. WLCSP18 - Recommended footprint . . . 100
Figure 38. WLCSP18 package marking example . . . 101
Figure 39. TSSOP20 – Outline . . . 102
Figure 40. TSSOP20 – Footprint example . . . 103
Figure 41. UFQFPN28 - Outline . . . 104
Figure 42. UFQFPN28 – Footprint example . . . 105
Figure 43. LQFP32 - Outline . . . 106
Figure 44. LQFP32 – Footprint example . . . 109
Figure 45. UFQFPN32 - Outline . . . 110
Figure 46. UFQFPN32 - Footprint example . . . 113
Figure 47. LQFP48 - Outline(15) . . . 114
Figure 48. LQFP48 - Footprint example . . . 116

Figure 49. UFQFPN48 – Outline 117
Figure 50. UFQFPN48 – Footprint example 118

1 Introduction

This document provides information on STM32G031x4/x6/x8 microcontrollers, such as description, functional overview, pin assignment and definition, electrical characteristics, packaging, and ordering codes.

Information on memory mapping and control registers is object of reference manual RM0444.

For information on the device errata with respect to the datasheet and reference manual, refer to the STM32G031x4/x6/x8 errata sheet ES0487.

Information on Arm®[a] Cortex®-M0+ core is available from the www.arm.com website.

a. Arm is a registered trademark of Arm Limited (or its subsidiaries) in the US and/or elsewhere.

2 Description

The STM32G031x4/x6/x8 mainstream microcontrollers are based on high-performance Arm® Cortex®-M0+ 32-bit RISC core operating at up to 64 MHz frequency. Offering a high level of integration, they are suitable for a wide range of applications in consumer, industrial and appliance domains and ready for the Internet of Things (IoT) solutions.

The devices incorporate a memory protection unit (MPU), high-speed embedded memories (8 Kbytes of SRAM and up to 64 Kbytes of flash program memory with read protection, write protection, proprietary code protection, and securable area), DMA, an extensive range of system functions, enhanced I/Os, and peripherals. The devices offer standard communication interfaces (two I^2Cs, two SPIs / one I^2S, and two USARTs), one 12-bit ADC (2.5 MSps) with up to 19 channels, an internal voltage reference buffer, a low-power RTC, an advanced control PWM timer running at up to double the CPU frequency, four general-purpose 16-bit timers, a 32-bit general-purpose timer, two low-power 16-bit timers, two watchdog timers, and a SysTick timer.

The devices operate within ambient temperatures from -40 to 125°C and with supply voltages from 1.7 V to 3.6 V. Optimized dynamic consumption combined with a comprehensive set of power-saving modes, low-power timers and low-power UART, allows the design of low-power applications.

VBAT direct battery input allows keeping RTC and backup registers powered.

The devices come in packages with 8 to 48 pins.

Table 2. STM32G031x4/x6/x8 device features and peripheral counts

Peripheral		STM32G031_														
		_J4	_J6	_Y8	_F4	_F6	_F8	_G4	_G6	_G8	_K4	_K6	_K8	_C4	_C6	_C8
Flash memory (Kbyte)		16	32	64	16	32	64	16	32	64	16	32	64	16	32	64
SRAM (Kbyte)		8 with parity														
Timers	Advanced control	1 (16-bit) high frequency														
	General-purpose	4 (16-bit) + 1 (32-bit)														
	Low-power	2 (16-bit)														
	SysTick	1														
	Watchdog	2														
Comm. interfaces	SPI [I2S](1)	1[1](2)	2 [1](2)													
	I2C	2														
	USART	2														
	LPUART	1														
RTC		Yes														
Tamper pins		1	2													
RNG / AES		No / No														
GPIOs		6		16	18			26			30			44		
Wakeup pins		2	4													
12-bit ADC channels (external + internal)		6 + 2		14 + 2				15 + 2			16 + 2			16 + 3		
VREFBUF		No												Yes		
Max. CPU frequency		64 MHz														
Operating voltage		1.7 to 3.6 V														
Operating temperature(3)		Ambient: -40 to 85 °C / -40 to 105 °C / -40 to 125 °C Junction: -40 to 105 °C / -40 to 125 °C / -40 to 130 °C														
Number of pins		8		18	20			28			32			48		

1. The numbers in brackets denote the count of SPI interfaces configurable as I^2S interface.
2. Plus two extra SPIs through USARTs
3. Depends on order code. Refer to *Section 7: Ordering information* for details.

Figure 1. Block diagram

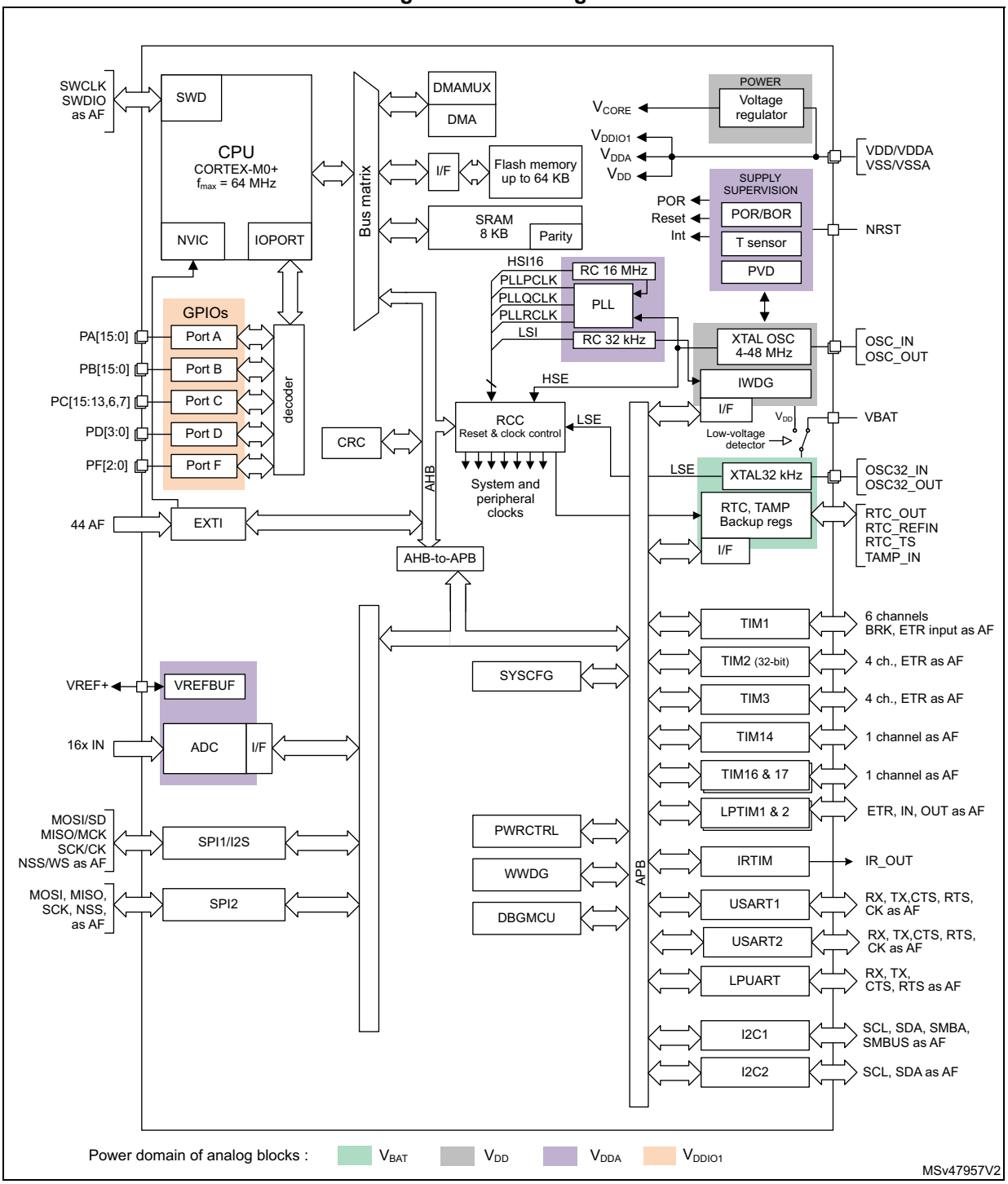

3 Functional overview

3.1 Arm® Cortex®-M0+ core with MPU

The Cortex-M0+ is an entry-level 32-bit Arm Cortex processor designed for a broad range of embedded applications. It offers significant benefits to developers, including:

- a simple architecture, easy to learn and program
- ultra-low power, energy-efficient operation
- excellent code density
- deterministic, high-performance interrupt handling
- upward compatibility with Cortex-M processor family
- platform security robustness, with integrated Memory Protection Unit (MPU).

The Cortex-M0+ processor is built on a highly area- and power-optimized 32-bit core, with a 2-stage pipeline Von Neumann architecture. The processor delivers exceptional energy efficiency through a small but powerful instruction set and extensively optimized design, providing high-end processing hardware including a single-cycle multiplier.

The Cortex-M0+ processor provides the exceptional performance expected of a modern 32-bit architecture, with a higher code density than other 8-bit and 16-bit microcontrollers.

Owing to embedded Arm core, the STM32G031x4/x6/x8 devices are compatible with Arm tools and software.

The Cortex-M0+ is tightly coupled with a nested vectored interrupt controller (NVIC) described in *Section 3.13.1*.

3.2 Memory protection unit

The memory protection unit (MPU) is used to manage the CPU accesses to memory to prevent one task to accidentally corrupt the memory or resources used by any other active task.

The MPU is especially helpful for applications where some critical or certified code has to be protected against the misbehavior of other tasks. It is usually managed by an RTOS (real-time operating system). If a program accesses a memory location that is prohibited by the MPU, the RTOS can detect it and take action. In an RTOS environment, the kernel can dynamically update the MPU area setting, based on the process to be executed.

The MPU is optional and can be bypassed for applications that do not need it.

3.3 Embedded flash memory

STM32G031x4/x6/x8 devices feature up to 64 Kbytes of embedded flash memory available for storing code and data.

Flexible protections can be configured thanks to option bytes:

- Readout protection (RDP) to protect the whole memory. Three levels are available:
  - Level 0: no readout protection
  - Level 1: memory readout protection: the flash memory cannot be read from or written to if either debug features are connected, boot in RAM or bootloader is selected
  - Level 2: chip readout protection: debug features (Cortex-M0+ serial wire), boot in RAM and bootloader selection are disabled. This selection is irreversible.

Table 3. Access status versus readout protection level and execution modes

Area	Protection level	User execution			Debug, boot from RAM or boot from system memory (loader)		
		Read	Write	Erase	Read	Write	Erase
User memory	1	Yes	Yes	Yes	No	No	No
	2	Yes	Yes	Yes	N/A	N/A	N/A
System memory	1	Yes	No	No	Yes	No	No
	2	Yes	No	No	N/A	N/A	N/A
Option bytes	1	Yes	Yes	Yes	Yes	Yes	Yes
	2	Yes	No	No	N/A	N/A	N/A
Backup registers	1	Yes	Yes	N/A(1)	No	No	N/A(1)
	2	Yes	Yes	N/A	N/A	N/A	N/A
OTP	1	Yes	Yes	N/A	Yes	No	N/A
	2	Yes	Yes	N/A	N/A	N/A	N/A

1. Erased upon RDP change from Level 1 to Level 0.

- Write protection (WRP): the protected area is protected against erasing and programming. Two areas per bank can be selected, with 2-Kbyte granularity.
- Proprietary code readout protection (PCROP): a part of the flash memory can be protected against read and write from third parties. The protected area is execute-only: it can only be reached by the STM32 CPU as instruction code, while all other accesses (DMA, debug and CPU data read, write and erase) are strictly prohibited. An additional option bit (PCROP_RDP) determines whether the PCROP area is erased or not when the RDP protection is changed from Level 1 to Level 0.

The whole non-volatile memory embeds the error correction code (ECC) feature supporting:

- single error detection and correction
- double error detection
- readout of the ECC fail address from the ECC register

3.3.1 Securable area

A part of the flash memory can be hidden from the application once the code it contains is executed. As soon as the write-once SEC_PROT bit is set, the securable memory cannot be accessed until the system resets. The securable area generally contains the secure boot code to execute only once at boot. This helps to isolate secret code from untrusted application code.

3.4 Embedded SRAM

STM32G031x4/x6/x8 devices have 8 Kbytes of embedded SRAM with parity. Hardware parity check allows memory data errors to be detected, which contributes to increasing functional safety of applications.

The memory can be read/write-accessed at CPU clock speed, with 0 wait states.

3.5 Boot modes

At startup, the boot pin and boot selector option bit are used to select one of the three boot options:

- boot from User flash memory
- boot from System memory
- boot from embedded SRAM

The boot pin is shared with a standard GPIO and can be enabled through the boot selector option bit. If the BOOT0 pin selects the boot from the main flash memory of which the first location is empty, the flash memory empty checker forces the boot from the system memory.

The system memory contains an embedded boot loader. It manages the flash memory reprogramming through one of the following interfaces:

- USART on pins PA9/PA10 or PA2/PA3
- I^2C-bus on pins PB6/PB7 or PB10/PB11

When boot loader is executed, it configures some of the GPIOs out of their by-default high-Z state. Refer to AN2606 for more details on the boot loader and on the GPIO configuration when booting from the system memory.

3.6 Cyclic redundancy check calculation unit (CRC)

The CRC (cyclic redundancy check) calculation unit is used to get a CRC code using a configurable generator polynomial value and size.

Among other applications, CRC-based techniques are used to verify data transmission or storage integrity. In the scope of the EN/IEC 60335-1 standard, they offer a means of verifying the flash memory integrity. The CRC calculation unit helps compute a signature of the software during runtime, to be compared with a reference signature generated at link time and stored at a given memory location.

3.7 Power supply management

3.7.1 Power supply schemes

The STM32G031x4/x6/x8 devices require a 1.7 V to 3.6 V operating supply voltage (V_{DD}). Several different power supplies are provided to specific peripherals:

- V_{DD} = 1.7 (1.60) to 3.6 V

  V_{DD} is the external power supply for the internal regulator and the system analog such as reset, power management and internal clocks. It is provided externally through VDD/VDDA pin.

  The minimum voltage of 1.7 V corresponds to power-on reset release threshold V_{POR}(max). Once this threshold is crossed and power-on reset is released, the functionality is guaranteed down to power-down reset threshold V_{PDR}(min).
- V_{DDA} = 1.62 V (ADC) / 2.4 V (VREFBUF) to 3.6 V

  V_{DDA} is the analog power supply for the A/D converter, voltage reference buffer. V_{DDA} voltage level is identical to V_{DD} voltage as it is provided externally through VDD/VDDA pin.
- V_{DDIO1} = V_{DD}

  V_{DDIO1} is the power supply for the I/Os. V_{DDIO1} voltage level is identical to V_{DD} voltage as it is provided externally through VDD/VDDA pin.
- V_{BAT} = 1.55 V to 3.6 V. V_{BAT} is the power supply (through a power switch) for RTC, TAMP, low-speed external 32.768 kHz oscillator and backup registers when V_{DD} is not present. V_{BAT} is provided externally through VBAT pin. When this pin is not available on the package, VBAT bonding pad is internally bonded to the VDD/VDDA pin.
- V_{REF+} is the analog peripheral input reference voltage, or the output of the internal voltage reference buffer (when enabled). When V_{DDA} < 2 V, V_{REF+} must be equal to V_{DDA}. When V_{DDA} ≥ 2 V, V_{REF+} must be between 2 V and V_{DDA}. It can be grounded when the analog peripherals using V_{REF+} are not active.

  The internal voltage reference buffer supports two output voltages, which is configured with VRS bit of the VREFBUF_CSR register:

  – V_{REF+} around 2.048 V (requiring V_{DDA} equal to or higher than 2.4 V)

  – V_{REF+} around 2.5 V (requiring V_{DDA} equal to or higher than 2.8 V)

  V_{REF+} is delivered through VREF+ pin. On packages without VREF+ pin, V_{REF+} is internally connected with V_{DD}, and the internal voltage reference buffer must be kept disabled (refer to datasheets for package pinout description).
- V_{CORE} is an internal supply for digital peripherals, SRAM and flash memory. It is produced by an embedded linear voltage regulator. On top of V_{CORE}, the flash memory is also powered from V_{DD}.

Figure 2. Power supply overview

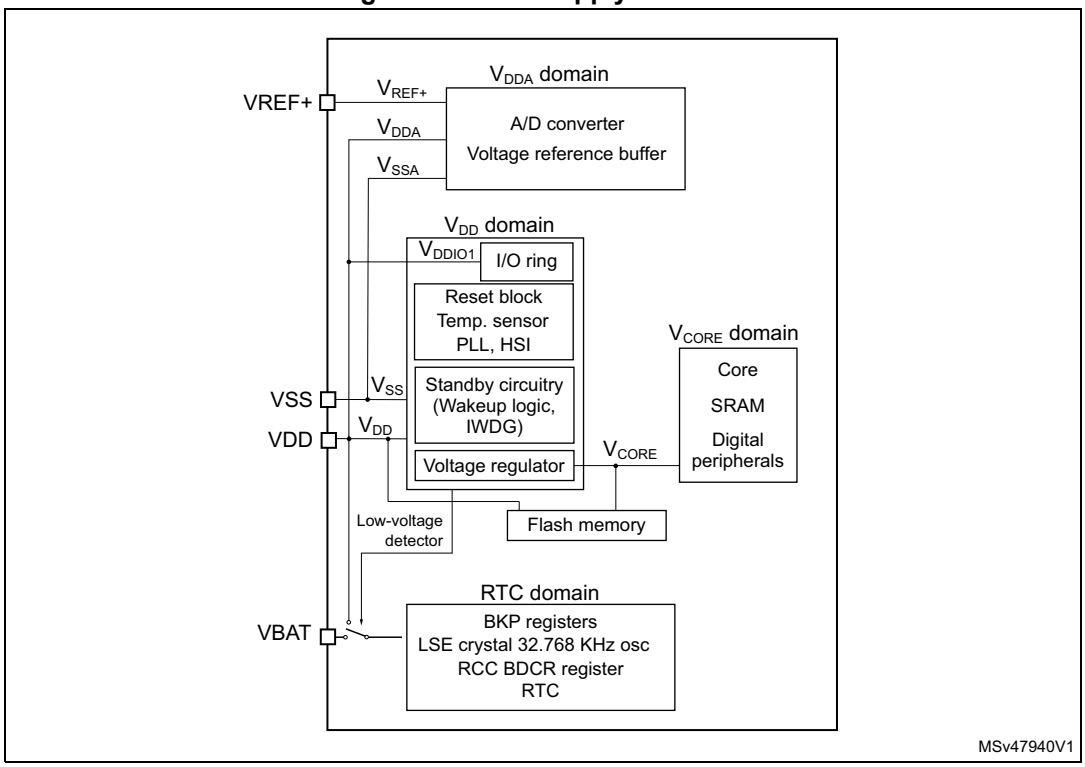

3.7.2 Power supply supervisor

The device has an integrated power-on/power-down (POR/PDR) reset active in all power modes except Shutdown and ensuring proper operation upon power-on and power-down. It maintains the device in reset when the supply voltage is below $V_{POR/PDR}$ threshold, without the need for an external reset circuit. Brownout reset (BOR) function allows extra flexibility. It can be enabled and configured through option bytes, by selecting one of four thresholds for rising V_{DD} and other four for falling V_{DD}.

The device also features an embedded programmable voltage detector (PVD) that monitors the V_{DD} power supply and compares it to V_{PVD} threshold. It allows generating an interrupt when V_{DD} level crosses the V_{PVD} threshold, selectively while falling, while rising, or while falling and rising. The interrupt service routine can then generate a warning message and/or put the MCU into a safe state. The PVD is enabled by software.

3.7.3 Voltage regulator

Two embedded linear voltage regulators, main regulator (MR) and low-power regulator (LPR), supply most of digital circuitry in the device.

The MR is used in Run and Sleep modes. The LPR is used in Low-power run, Low-power sleep and Stop modes.

In Standby and Shutdown modes, both regulators are powered down and their outputs set in high-impedance state, such as to bring their current consumption close to zero. However, SRAM data retention is possible in Standby mode, in which case the LPR remains active and it only supplies the SRAM.

3.7.4 Low-power modes

By default, the microcontroller is in Run mode after system or power reset. It is up to the user to select one of the low-power modes described below.

Sleep mode

In Sleep mode, only the CPU is stopped. All peripherals continue to operate and can wake up the CPU when an interrupt/event occurs.

Low-power run mode

This mode is achieved with V_{CORE} supplied by the low-power regulator to minimize the regulator's operating current. The code can be executed from SRAM or from flash memory, and the CPU frequency is limited to 2 MHz. The peripherals with independent clock can be clocked by HSI16.

Low-power sleep mode

This mode is entered from the low-power run mode. Only the CPU clock is stopped. When wakeup is triggered by an event or an interrupt, the system reverts to the Low-power run mode.

Stop 0 and Stop 1 modes

In Stop 0 and Stop 1 modes, the device achieves the lowest power consumption while retaining the SRAM and register contents. All clocks in the V_{CORE} domain are stopped. The PLL, as well as the HSI16 RC oscillator and the HSE crystal oscillator are disabled. The LSE or LSI keep running. The RTC can remain active (Stop mode with RTC, Stop mode without RTC).

Some peripherals with wakeup capability can enable the HSI16 RC during Stop mode, so as to get clock for processing the wakeup event. The main regulator remains active in Stop 0 mode while it is turned off in Stop 1 mode.

Standby mode

The Standby mode is used to achieve the lowest power consumption, with POR/PDR always active in this mode. The main regulator is switched off to power down V_{CORE} domain. The low-power regulator is either switched off or kept active. In the latter case, it only supplies SRAM to ensure data retention. The PLL, as well as the HSI16 RC oscillator and the HSE crystal oscillator are also powered down. The RTC can remain active (Standby mode with RTC, Standby mode without RTC).

For each I/O, the software can determine whether a pull-up, a pull-down or no resistor shall be applied to that I/O during Standby mode.

Upon entering Standby mode, register contents are lost except for registers in the RTC domain and standby circuitry. The SRAM contents can be retained through register setting.

The device exits Standby mode upon external reset event (NRST pin), IWDG reset event, wakeup event (WKUP pin, configurable rising or falling edge), RTC event (alarm, periodic wakeup, timestamp), TAMP event, or when a failure is detected on LSE (CSS on LSE).

Shutdown mode

The Shutdown mode allows to achieve the lowest power consumption. The internal regulator is switched off to power down the V_{CORE} domain. The PLL, as well as the HSI16 and LSI RC-oscillators and HSE crystal oscillator are also powered down. The RTC can remain active (Shutdown mode with RTC, Shutdown mode without RTC).

The BOR is not available in Shutdown mode. No power voltage monitoring is possible in this mode. Therefore, switching to RTC domain is not supported.

SRAM and register contents are lost except for registers in the RTC domain.

The device exits Shutdown mode upon external reset event (NRST pin), wakeup event (WKUP pin, configurable rising or falling edge), RTC event (alarm, periodic wakeup, timestamp), or TAMP event.

3.7.5 Reset mode

During and upon exiting reset, the schmitt triggers of I/Os are disabled so as to reduce power consumption. In addition, when the reset source is internal, the built-in pull-up resistor on NRST pin is deactivated.

3.7.6 VBAT operation

The V_{BAT} power domain, consuming very little energy, includes RTC, and LSE oscillator and backup registers.

In VBAT mode, the RTC domain is supplied from VBAT pin. The power source can be, for example, an external battery or an external supercapacitor. Two anti-tamper detection pins are available.

The RTC domain can also be supplied from V_{DD}.

By means of a built-in switch, an internal voltage supervisor allows automatic switching of RTC domain powering between V_{DD} and voltage from VBAT pin to ensure that the supply voltage of the RTC domain (V_{BAT}) remains within valid operating conditions. If both voltages are valid, the RTC domain is supplied from V_{DD}.

An internal circuit for charging the battery on VBAT pin can be activated if the V_{DD} voltage is within a valid range.

Note: External interrupts and RTC alarm/events cannot cause the microcontroller to exit the VBAT mode, as in that mode the V_{DD} is not within a valid range.

3.8 Interconnect of peripherals

Several peripherals have direct connections between them. This allows autonomous communication between peripherals, saving CPU resources thus power supply consumption. In addition, these hardware connections allow fast and predictable latency.

Depending on peripherals, these interconnections can operate in Run, Sleep and Stop modes.

Table 4. Interconnect of peripherals

Interconnect source	Interconnect destination	Interconnect action	Run Low-power run	Sleep Low-power sleep	Stop
TIMx	TIMx	Timer synchronization or chaining	Y	Y	-
	ADCx	Conversion triggers	Y	Y	-
	DMA	Memory-to-memory transfer trigger	Y	Y	-
ADCx	TIM1	Timer triggered by analog watchdog	Y	Y	-
RTC	TIM16	Timer input channel from RTC events	Y	Y	-
	LPTIMERx	Low-power timer triggered by RTC alarms or tampers	Y	Y	Y
All clock sources (internal and external)	TIM14,16,17	Clock source used as input channel for RC measurement and trimming	Y	Y	-
CSS RAM (parity error) Flash memory (ECC error) PVD	TIM1,16,17	Timer break	Y	Y	-
CPU (hard fault)	TIM1,16,17	Timer break	Y	-	-
GPIO	TIMx	External trigger	Y	Y	-
	LPTIMERx	External trigger	Y	Y	Y
	ADC	Conversion external trigger	Y	Y	-

3.9 Clocks and startup

The clock controller distributes the clocks coming from different oscillators to the core and the peripherals. It also manages clock gating for low-power modes and ensures clock robustness. It features:

- **Clock prescaler:** to get the best trade-off between speed and current consumption, the clock frequency to the CPU and peripherals can be adjusted by a programmable prescaler
- **Safe clock switching:** clock sources can be changed safely on the fly in run mode through a configuration register.
- **Clock management:** to reduce power consumption, the clock controller can stop the clock to the core, individual peripherals or memory.

- **System clock source:** three different sources can deliver SYSCLK system clock:
  - 4-48 MHz high-speed oscillator with external crystal or ceramic resonator (HSE). It can supply clock to system PLL. The HSE can also be configured in bypass mode for an external clock.
  - 16 MHz high-speed internal RC oscillator (HSI16), trimmable by software. It can supply clock to system PLL.
  - System PLL with maximum output frequency of 64 MHz. It can be fed with HSE or HSI16 clocks.
- **Auxiliary clock source:** two ultra-low-power clock sources for the real-time clock (RTC):
  - 32.768 kHz low-speed oscillator with external crystal (LSE), supporting four drive capability modes. The LSE can also be configured in bypass mode for using an external clock.
  - 32 kHz low-speed internal RC oscillator (LSI) with ±5% accuracy, also used to clock an independent watchdog.
- **Peripheral clock sources:** several peripherals (I2S, USARTs, I2Cs, LPTIMs, ADC) have their own clock independent of the system clock.
- **Clock security system (CSS):** in the event of HSE clock failure, the system clock is automatically switched to HSI16 and, if enabled, a software interrupt is generated. LSE clock failure can also be detected and generate an interrupt. The CCS feature can be enabled by software.
- **Clock output:**
  - **MCO (microcontroller clock output)** provides one of the internal clocks for external use by the application
  - **LSCO (low speed clock output)** provides LSI or LSE in all low-power modes (except in VBAT operation).

Several prescalers allow the application to configure AHB and APB domain clock frequencies, 64 MHz at maximum.

3.10 General-purpose inputs/outputs (GPIOs)

Each of the GPIO pins can be configured by software as output (push-pull or open-drain), as input (with or without pull-up or pull-down) or as peripheral alternate function (AF). Most of the GPIO pins are shared with special digital or analog functions.

Through a specific sequence, this special function configuration of I/Os can be locked, such as to avoid spurious writing to I/O control registers.

3.11 Direct memory access controller (DMA)

The direct memory access (DMA) controller is a bus master and system peripheral with single-AHB architecture.

With 5 channels, it performs data transfers between memory-mapped peripherals and/or memories, to offload the CPU.

Each channel is dedicated to managing memory access requests from one or more peripherals. The unit includes an arbiter for handling the priority between DMA requests.

Main features of the DMA controller:

- Single-AHB master
- Peripheral-to-memory, memory-to-peripheral, memory-to-memory and peripheral-to-peripheral data transfers
- Access, as source and destination, to on-chip memory-mapped devices such as flash memory, SRAM, and AHB and APB peripherals
- All DMA channels independently configurable:
  - Each channel is associated either with a DMA request signal coming from a peripheral, or with a software trigger in memory-to-memory transfers. This configuration is done by software.
  - Priority between the requests is programmable by software (four levels per channel: very high, high, medium, low) and by hardware in case of equality (such as request to channel 1 has priority over request to channel 2).
  - Transfer size of source and destination are independent (byte, half-word, word), emulating packing and unpacking. Source and destination addresses must be aligned on the data size.
  - Support of transfers from/to peripherals to/from memory with circular buffer management
  - Programmable number of data to be transferred: 0 to 2^{16} - 1
- Generation of an interrupt request per channel. Each interrupt request originates from any of the three DMA events: transfer complete, half transfer, or transfer error.

3.12 DMA request multiplexer (DMAMUX)

The DMAMUX request multiplexer enables routing a DMA request line between the peripherals and the DMA controller. Each channel selects a unique DMA request line, unconditionally or synchronously with events from its DMAMUX synchronization inputs. DMAMUX may also be used as a DMA request generator from programmable events on its input trigger signals.

3.13 Interrupts and events

The device flexibly manages events causing interrupts of linear program execution, called exceptions. The Cortex-M0+ processor core, a nested vectored interrupt controller (NVIC) and an extended interrupt/event controller (EXTI) are the assets contributing to handling the exceptions. Exceptions include core-internal events such as, for example, a division by zero and, core-external events such as logical level changes on physical lines. Exceptions result in interrupting the program flow, executing an interrupt service routine (ISR) then resuming the original program flow.

The processor context (contents of program pointer and status registers) is stacked upon program interrupt and unstacked upon program resume, by hardware. This avoids context stacking and unstacking in the interrupt service routines (ISRs) by software, thus saving time, code and power. The ability to abandon and restart load-multiple and store-multiple operations significantly increases the device’s responsiveness in processing exceptions.

3.13.1 Nested vectored interrupt controller (NVIC)

The configurable nested vectored interrupt controller is tightly coupled with the core. It handles physical line events associated with a non-maskable interrupt (NMI) and maskable interrupts, and Cortex-M0+ exceptions. It provides flexible priority management.

The tight coupling of the processor core with NVIC significantly reduces the latency between interrupt events and start of corresponding interrupt service routines (ISRs). The ISR vectors are listed in a vector table, stored in the NVIC at a base address. The vector address of an ISR to execute is hardware-built from the vector table base address and the ISR order number used as offset.

If a higher-priority interrupt event happens while a lower-priority interrupt event occurring just before is waiting for being served, the later-arriving higher-priority interrupt event is served first. Another optimization is called tail-chaining. Upon a return from a higher-priority ISR then start of a pending lower-priority ISR, the unnecessary processor context unstacking and stacking is skipped. This reduces latency and contributes to power efficiency.

Features of the NVIC:

- Low-latency interrupt processing
- 4 priority levels
- Handling of a non-maskable interrupt (NMI)
- Handling of 32 maskable interrupt lines
- Handling of 10 Cortex-M0+ exceptions
- Later-arriving higher-priority interrupt processed first
- Tail-chaining
- Interrupt vector retrieval by hardware

3.13.2 Extended interrupt/event controller (EXTI)

The extended interrupt/event controller adds flexibility in handling physical line events and allows identifying wake-up events at processor wakeup from Stop mode.

The EXTI controller has a number of channels, of which some with rising, falling or rising, and falling edge detector capability. Any GPIO and a few peripheral signals can be connected to these channels.

The channels can be independently masked.

The EXTI controller can capture pulses shorter than the internal clock period.

A register in the EXTI controller latches every event even in Stop mode, which allows the software to identify the origin of the processor's wake-up from Stop mode or, to identify the GPIO and the edge event having caused an interrupt.

3.14 Analog-to-digital converter (ADC)

A native 12-bit analog-to-digital converter is embedded into STM32G031x4/x6/x8 devices. The ADC has up to 16 external channels and 3 internal channels (temperature sensor, voltage reference, V_{BAT} monitoring). It performs conversions in single-shot or scan mode. In scan mode, automatic conversion is performed on a selected group of analog inputs.

The ADC frequency is independent from the CPU frequency, allowing maximum sampling rate of ~2.5 MSps even with a low CPU speed. An auto-shutdown function guarantees that the ADC is powered off except during the active conversion phase.

The ADC can be served by the DMA controller. It can operate in the whole V_{DD} supply range.

The ADC features a hardware oversampler up to 256 samples, improving the resolution to 16 bits (refer to AN2668).

An analog watchdog feature allows very precise monitoring of the converted voltage of one, some or all scanned channels. An interrupt is generated when the converted voltage is outside the programmed thresholds.

The events generated by the general-purpose timers (TIMx) can be internally connected to the ADC start triggers, to allow the application to synchronize A/D conversions with timers.

3.14.1 Temperature sensor

The temperature sensor (TS) generates a voltage V_{TS} that varies linearly with temperature.

The temperature sensor is internally connected to an ADC input to convert the sensor output voltage into a digital value.

The sensor provides good linearity but it has to be calibrated to obtain good overall accuracy of the temperature measurement. As the offset of the temperature sensor may vary from part to part due to process variation, the uncalibrated internal temperature sensor is suitable only for relative temperature measurements.

To improve the accuracy of the temperature sensor, each part is individually factory-calibrated by ST. The resulting calibration data are stored in the part's engineering bytes, accessible in read-only mode.

Table 5. Temperature sensor calibration values

Calibration value name	Description	Memory address
TS_CAL1	TS ADC raw data acquired at a temperature of 30 °C (± 5 °C), $V_{DDA} = V_{REF+}$ = 3.0 V (± 10 mV)	0x1FFF 75A8 - 0x1FFF 75A9
TS_CAL2	TS ADC raw data acquired at a temperature of 130 °C (± 5 °C), $V_{DDA} = V_{REF+}$ = 3.0 V (± 10 mV)	0x1FFF 75CA - 0x1FFF 75CB

3.14.2 Internal voltage reference (V_{REFINT})

The internal voltage reference (V_{REFINT}) provides a stable (bandgap) voltage output for the ADC. V_{REFINT} is internally connected to an ADC input. The V_{REFINT} voltage is individually precisely measured for each part by ST during production test and stored in the part's engineering bytes. It is accessible in read-only mode.

Table 6. Internal voltage reference calibration values

Calibration value name	Description	Memory address
V_{REFINT}	Raw data acquired at a temperature of 30 °C (± 5 °C), $V_{DDA} = V_{REF+}$ = 3.0 V (± 10 mV)	0x1FFF 75AA - 0x1FFF 75AB

3.14.3 V_{BAT} battery voltage monitoring

This embedded hardware feature allows the application to measure the V_{BAT} battery voltage using an internal ADC input. As the V_{BAT} voltage may be higher than V_{DDA} and thus outside the ADC input range, the VBAT pin is internally connected to a bridge divider by three. As a consequence, the converted digital value is one third the V_{BAT} voltage.

3.15 Voltage reference buffer (VREFBUF)

When enabled, an embedded buffer provides the internal reference voltage to analog blocks (for example ADC) and to VREF+ pin for external components.

The internal voltage reference buffer supports two voltages:

- 2.048 V
- 2.5 V

An external voltage reference can be provided through the VREF+ pin when the internal voltage reference buffer is disabled.

On some packages, the VREF+ pad of the silicon die is double-bonded with supply pad to common VDD/VDDA pin and so the internal voltage reference buffer cannot be used.

3.16 Timers and watchdogs

The device includes an advanced-control timer, five general-purpose timers, two low-power timers, two watchdog timers and a SysTick timer. *Table 7* compares features of the advanced-control, general-purpose and basic timers.

Table 7. Timer feature comparison

Timer type	Timer	Counter resolution	Counter type	Maximum operating frequency	Prescaler factor	DMA request generation	Capture/ compare channels	Complementary outputs
Advanced-control	TIM1	16-bit	Up, down, up/down	128 MHz	Integer from 1 to 2^{16}	Yes	4 + 2 internal	3

Table 7. Timer feature comparison (continued)

Timer type	Timer	Counter resolution	Counter type	Maximum operating frequency	Prescaler factor	DMA request generation	Capture/ compare channels	Complementary outputs
General-purpose	TIM2	32-bit	Up, down, up/down	64 MHz	Integer from 1 to 2^{16}	Yes	4	-
	TIM3	16-bit	Up, down, up/down	64 MHz	Integer from 1 to 2^{16}	Yes	4	-
	TIM14	16-bit	Up	64 MHz	Integer from 1 to 2^{16}	No	1	-
	TIM16 TIM17	16-bit	Up	64 MHz	Integer from 1 to 2^{16}	Yes	1	1
Low-power	LPTIM1 LPTIM2	16-bit	Up	64 MHz	2^n where n=0 to 7	No	N/A	-

3.16.1 Advanced-control timer (TIM1)

The advanced-control timer can be seen as a three-phase PWM unit multiplexed on 6 channels. It has complementary PWM outputs with programmable inserted dead-times. It can also be seen as a complete general-purpose timer. The four independent channels can be used for:

- input capture
- output compare
- PWM output (edge or center-aligned modes) with full modulation capability (0-100%)
- one-pulse mode output

On top of these, there are two internal channels that can be used.

In debug mode, the advanced-control timer counter can be frozen and the PWM outputs disabled, so as to turn off any power switches driven by these outputs.

Many features are shared with those of the general-purpose TIMx timers (described in *Section 3.16.2*) using the same architecture, so the advanced-control timers can work together with the TIMx timers via the Timer Link feature for synchronization or event chaining.

3.16.2 General-purpose timers (TIM2, 3, 14, 16, 17)

There are five synchronizable general-purpose timers embedded in the device (refer to *Table 7* for comparison). Each general-purpose timer can be used to generate PWM outputs or act as a simple timebase.

- TIM2, TIM3

  These are full-featured general-purpose timers:

  – TIM2 with 32-bit auto-reload up/downcounter and 16-bit prescaler

  – TIM3 with 16-bit auto-reload up/downcounter and 16-bit prescaler

  They have four independent channels for input capture/output compare, PWM or one-pulse mode output. They can operate in combination with other general-purpose timers via the Timer Link feature for synchronization or event chaining. They can generate

independent DMA request and support quadrature encoders. Their counter can be frozen in debug mode.

- TIM14

  This timer is based on a 16-bit auto-reload upcounter and a 16-bit prescaler. It has one channel for input capture/output compare, PWM output or one-pulse mode output. Its counter can be frozen in debug mode.

- TIM16, TIM17

  These are general-purpose timers featuring:

  – 16-bit auto-reload upcounter and 16-bit prescaler

  – 1 channel and 1 complementary channel

  All channels can be used for input capture/output compare, PWM or one-pulse mode output. The timers can operate together via the Timer Link feature for synchronization or event chaining. They can generate independent DMA request. Their counters can be frozen in debug mode.

3.16.3 Low-power timers (LPTIM1 and LPTIM2)

These timers have an independent clock. When fed with LSE, LSI or external clock, they keep running in Stop mode and they can wake up the system from it.

Features of LPTIM1 and LPTIM2:

- 16-bit up counter with 16-bit autoreload register
- 16-bit compare register
- Configurable output (pulse, PWM)
- Continuous/one-shot mode
- Selectable software/hardware input trigger
- Selectable clock source:
  – Internal: LSE, LSI, HSI16 or APB clocks
  – External: over LPTIM input (working even with no internal clock source running, used by pulse counter application)
- Programmable digital glitch filter
- Encoder mode

3.16.4 Independent watchdog (IWDG)

The independent watchdog is based on an 8-bit prescaler and 12-bit downcounter with user-defined refresh window. It is clocked from an independent 32 kHz internal RC (LSI). Independent of the main clock, it can operate in Stop and Standby modes. It can be used either as a watchdog to reset the device when a problem occurs, or as a free-running timer for application timeout management. It is hardware- or software-configurable through the option bytes. Its counter can be frozen in debug mode.

3.16.5 System window watchdog (WWDG)

The window watchdog is based on a 7-bit downcounter that can be set as free-running. It can be used as a watchdog to reset the device when a problem occurs. It is clocked by the system clock. It has an early-warning interrupt capability. Its counter can be frozen in debug mode.

3.16.6 SysTick timer

This timer is dedicated to real-time operating systems, but it can also be used as a standard down counter.

Features of SysTick timer:

- 24-bit down counter
- Autoreload capability
- Maskable system interrupt generation when the counter reaches 0
- Programmable clock source

3.17 Real-time clock (RTC), tamper (TAMP) and backup registers

The device embeds an RTC and five 32-bit backup registers, located in the RTC domain of the silicon die.

The ways of powering the RTC domain are described in *Section 3.7.6*.

The RTC is an independent BCD timer/counter.

Features of the RTC:

- Calendar with subsecond, seconds, minutes, hours (12 or 24 format), week day, date, month, year, in BCD (binary-coded decimal) format
- Automatic correction for 28, 29 (leap year), 30, and 31 days of the month
- Programmable alarm
- On-the-fly correction from 1 to 32767 RTC clock pulses, usable for synchronization with a master clock
- Reference clock detection - a more precise second-source clock (50 or 60 Hz) can be used to improve the calendar precision
- Digital calibration circuit with 0.95 ppm resolution, to compensate for quartz crystal inaccuracy
- Two anti-tamper detection pins with programmable filter
- Timestamp feature to save a calendar snapshot, triggered by an event on the timestamp pin or a tamper event, or by switching to VBAT mode
- 17-bit auto-reload wakeup timer (WUT) for periodic events, with programmable resolution and period
- Multiple clock sources and references:
  - A 32.768 kHz external crystal (LSE)
  - An external resonator or oscillator (LSE)
  - The internal low-power RC oscillator (LSI, with typical frequency of 32 kHz)
  - The high-speed external clock (HSE) divided by 32

When clocked by LSE, the RTC operates in VBAT mode and in all low-power modes. When clocked by LSI, the RTC does not operate in VBAT mode, but it does in low-power modes except for the Shutdown mode.

All RTC events (Alarm, WakeUp Timer, Timestamp or Tamper) can generate an interrupt and wake the device up from the low-power modes.

The backup registers allow keeping 20 bytes of user application data in the event of V_{DD} failure, if a valid backup supply voltage is provided on VBAT pin. They are not affected by

the system reset, power reset, and upon the device's wakeup from Standby or Shutdown modes.

3.18 Inter-integrated circuit interface (I2C)

The device embeds two I2C peripherals. Refer to *Table 8* for the features.

The I^2C-bus interface handles communication between the microcontroller and the serial I^2C-bus. It controls all I^2C-bus-specific sequencing, protocol, arbitration and timing.

Features of the I2C peripheral:

- I^2C-bus specification and user manual rev. 5 compatibility:
  - Slave and master modes, multimaster capability
  - Standard-mode (Sm), with a bitrate up to 100 kbit/s
  - Fast-mode (Fm), with a bitrate up to 400 kbit/s
  - Fast-mode Plus (Fm+), with a bitrate up to 1 Mbit/s and extra output drive I/Os
  - 7-bit and 10-bit addressing mode, multiple 7-bit slave addresses
  - Programmable setup and hold times
  - Clock stretching
- SMBus specification rev 3.0 compatibility:
  - Hardware PEC (packet error checking) generation and verification with ACK control
  - Command and data acknowledge control
  - Address resolution protocol (ARP) support
  - Host and Device support
  - SMBus alert
  - Timeouts and idle condition detection
- PMBus rev 1.3 standard compatibility
- Independent clock: a choice of independent clock sources allowing the I2C communication speed to be independent of the PCLK reprogramming
- Wakeup from Stop mode on address match
- Programmable analog and digital noise filters
- 1-byte buffer with DMA capability

Table 8. I^2C implementation

I^2C features(1)	I2C1	I2C2
Standard mode (up to 100 kbit/s)	X	X
Fast mode (up to 400 kbit/s)	X	X
Fast Mode Plus (up to 1 Mbit/s) with extra output drive I/Os	X	X
Programmable analog and digital noise filters	X	X
SMBus/PMBus hardware support	X	-
Independent clock	X	-
Wakeup from Stop mode on address match	X	-

1. X: supported

3.19 Universal synchronous/asynchronous receiver transmitter (USART)

The device embeds universal synchronous/asynchronous receivers/transmitters that communicate at speeds of up to 8 Mbit/s.

They provide hardware management of the CTS, RTS and RS485 DE signals, multiprocessor communication mode, SPI synchronous communication and single-wire half-duplex communication mode. Some can also support SmartCard communication (ISO 7816), IrDA SIR ENDEC, LIN Master/Slave capability and auto baud rate feature, and have a clock domain independent of the CPU clock, which allows them to wake up the MCU from Stop mode. The wakeup events from Stop mode are programmable and can be:

- start bit detection
- any received data frame
- a specific programmed data frame

All USART interfaces can be served by the DMA controller.

Table 9. USART implementation

USART modes/features(1)	USART1	USART2
Hardware flow control for modem	X	X
Continuous communication using DMA	X	X
Multiprocessor communication	X	X
SPI emulation master/slave (synchronous mode)	X	X
Smartcard mode	X	-
Single-wire half-duplex communication	X	X
IrDA SIR ENDEC block	X	-
LIN mode	X	-
Dual clock domain and wakeup from Stop mode	X	-
Receiver timeout interrupt	X	-
Modbus communication	X	-
Auto baud rate detection	X	-
Driver Enable	X	X

1. X: supported

3.20 Low-power universal asynchronous receiver transmitter (LPUART)

The device embeds one LPUART. The peripheral supports asynchronous serial communication with minimum power consumption. It supports half duplex single wire communication and modem operations (CTS/RTS). It allows multiprocessor communication.

The LPUART has a clock domain independent of the CPU clock, and can wakeup the system from Stop mode. The Stop mode wakeup events are programmable and can be:

- start bit detection
- any received data frame
- a specific programmed data frame

Only a 32.768 kHz clock (LSE) is needed to allow LPUART communication up to 9600 baud. Therefore, even in Stop mode, the LPUART can wait for an incoming frame while having an extremely low energy consumption. Higher speed clock can be used to reach higher baudrates.

The LPUART interface can be served by the DMA controller.

3.21 Serial peripheral interface (SPI)

The device contains two SPIs running at up to 32 Mbits/s in master and slave modes. It supports half-duplex, full-duplex and simplex communications. A 3-bit prescaler gives eight master mode frequencies. The frame size is configurable from 4 bits to 16 bits. The SPI peripherals support NSS pulse mode, TI mode and hardware CRC calculation.

The SPI peripherals can be served by the DMA controller.

The I^2S interface mode of the SPI peripheral (if supported, see the following table) supports four different audio standards can operate as master or slave, in half-duplex communication mode. It can be configured to transfer 16 and 24 or 32 bits with 16-bit or 32-bit data resolution and synchronized by a specific signal. Audio sampling frequency from 8 kHz up to 192 kHz can be set by an 8-bit programmable linear prescaler. When operating in master mode, it can output a clock for an external audio component at 256 times the sampling frequency.

Table 10. SPI/I2S implementation

SPI features[1]	SPI1	SPI2
Hardware CRC calculation	X	X
Rx/Tx FIFO	X	X
NSS pulse mode	X	X
I^2S mode	X	-
TI mode	X	X

1. X = supported.

3.22 Development support

3.22.1 Serial wire debug port (SW-DP)

An Arm SW-DP interface is provided to allow a serial wire debugging tool to be connected to the MCU.

4 Pinouts, pin description and alternate functions

Figure 3. STM32G031Jx SO8N pinout

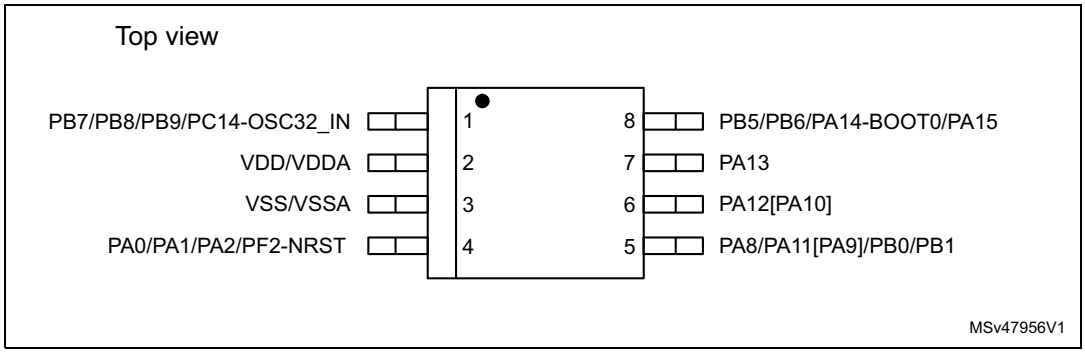

Figure 4. STM32G031Yx WLCSP18 ballout

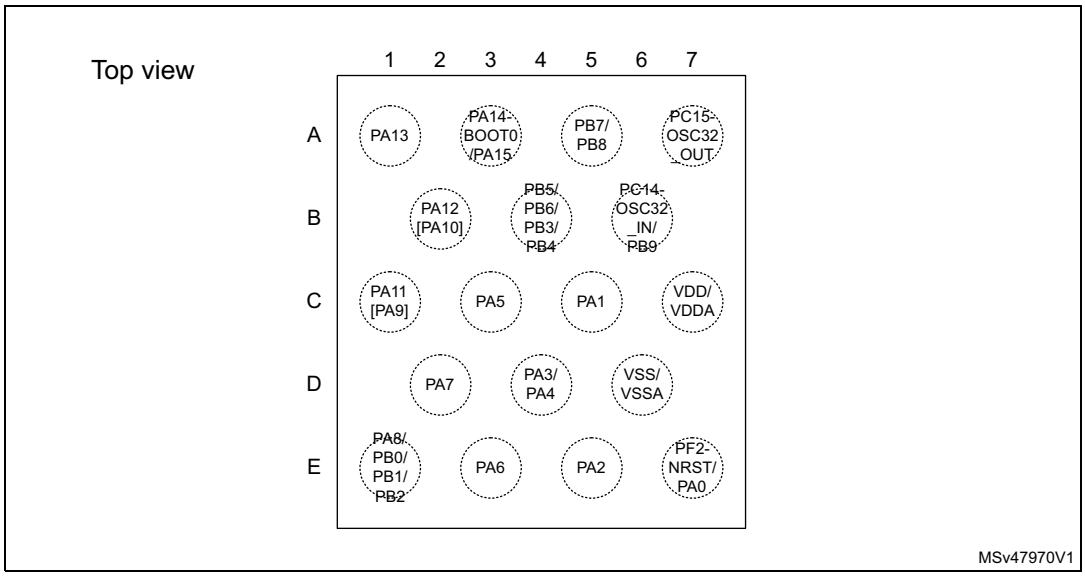

Figure 5. STM32G031Fx TSSOP20 pinout

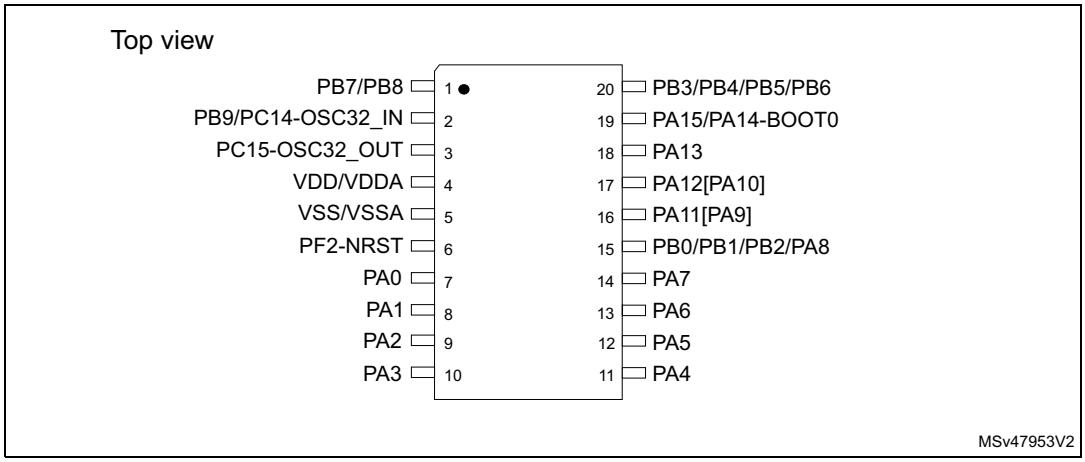

Figure 6. STM32G031GxU UFQFPN28 pinout

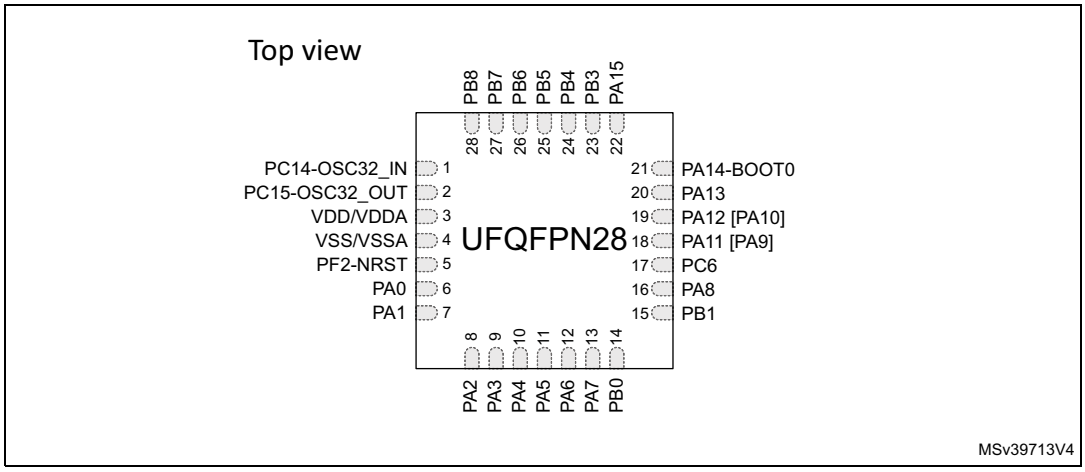

Figure 7. STM32G031KxT LQFP32 pinout

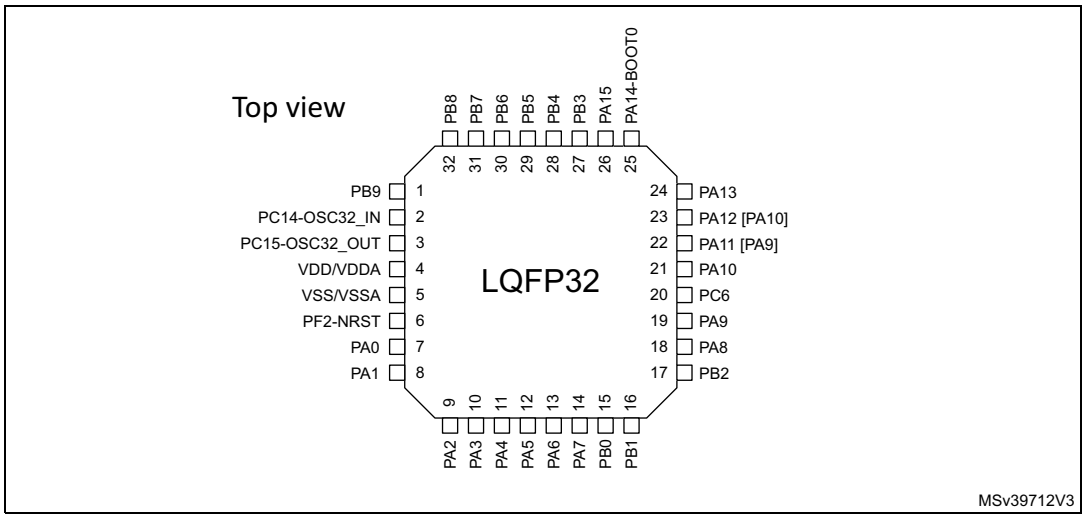

Figure 8. STM32G031KxU UFQFPN32 pinout

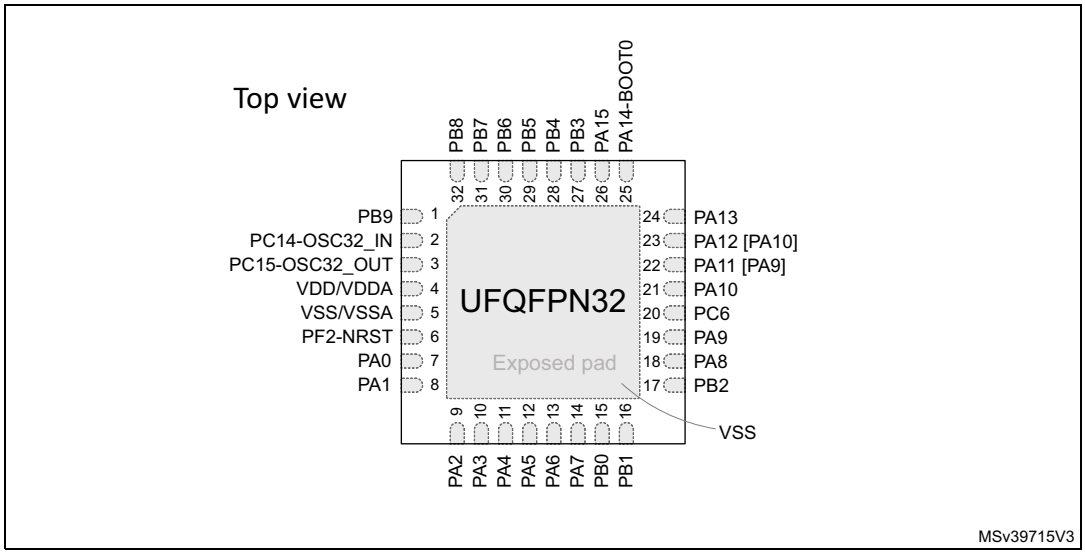

Figure 9. STM32G031CxT LQFP48 pinout

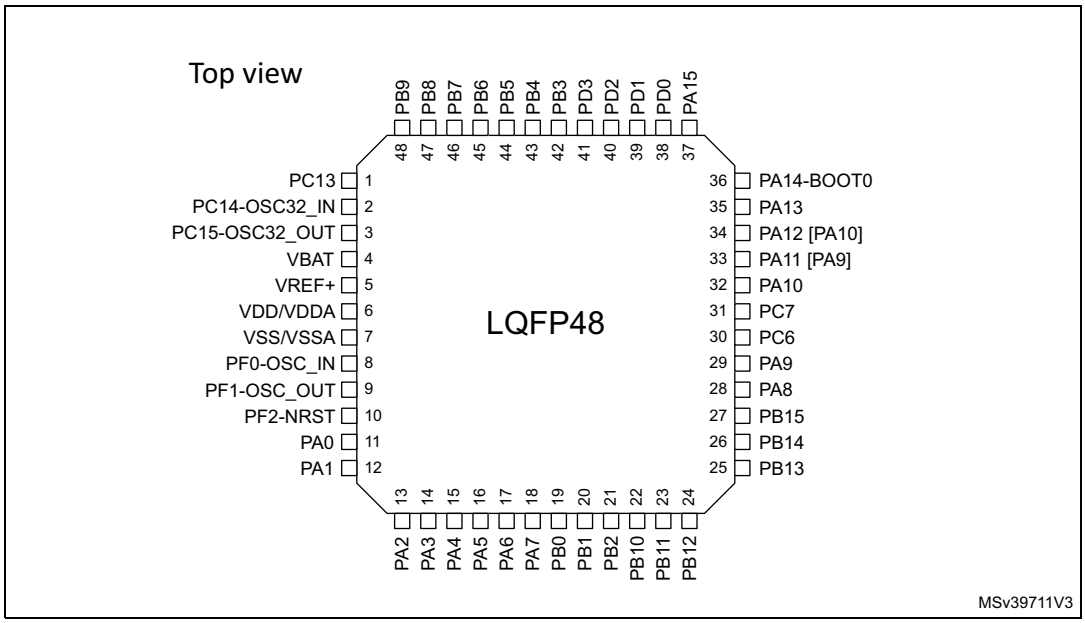

Figure 10. STM32G031CxU UFQFPN48 pinout

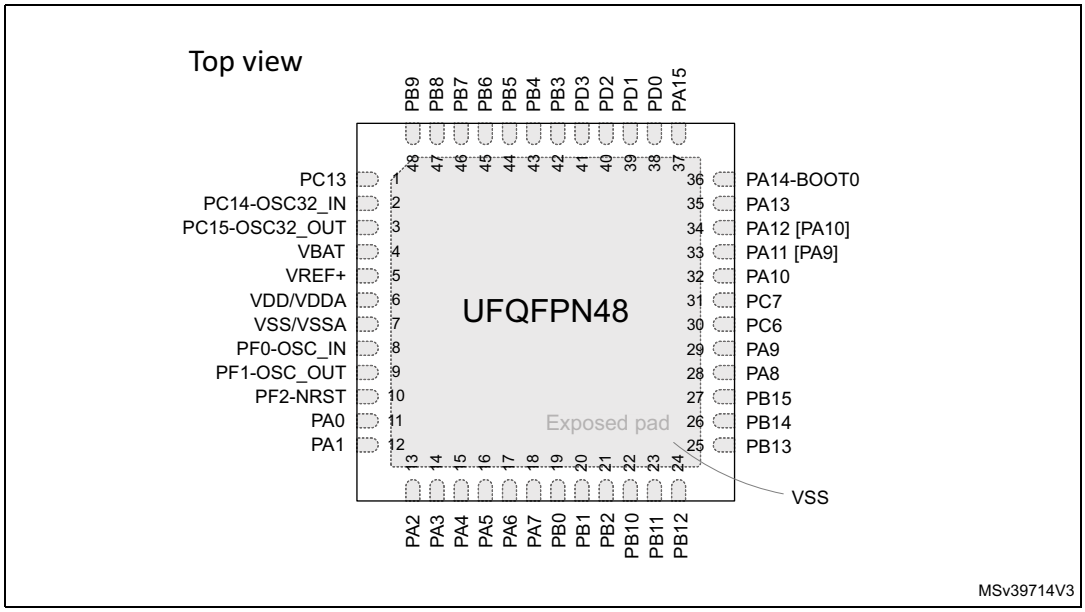

Table 11. Terms and symbols used in *Pin assignment and description* table

Column		Symbol	Definition
Pin name		Terminal name corresponds to its by-default function at reset, unless otherwise specified in parenthesis under the pin name.	
Pin type		S	Supply pin
		I	Input only pin
		I/O	Input / output pin
I/O structure		FT	5 V tolerant I/O
		RST	Reset pin with embedded weak pull-up resistor
		Options for FT I/Os	
		_f	I/O, Fm+ capable
		_a	I/O, with analog switch function
		_e	I/O, with switchable diode to V_{DDIO1}
Note		Upon reset, all I/Os are set as analog inputs, unless otherwise specified.	
Pin functions	Alternate functions	Functions selected through GPIOx_AFR registers	
	Additional functions	Functions directly selected/enabled through peripheral registers	

Table 12. Pin assignment and description

Pin						Pin name (function upon reset)	Pin type	I/O structure	Note	Alternate functions	Additional functions
SO8N	WLCSP18	TSSOP20	UFQFPN28	LQFP32 / UFQFPN32	LQFP48 / UFQFPN48						
-	-	-	-	-	1	PC13	I/O	FT	(1)(2)	TIM1_BK	TAMP_IN1, RTC_TS, RTC_OUT1, WKUP2
-	-	-	-	-	2	PC14-OSC32_IN (PC14)	I/O	FT	(1)(2)	TIM1_BK2	OSC32_IN
1	B6	2	1	2	-	PC14-OSC32_IN (PC14)	I/O	FT	(1)(2)	TIM1_BK2	OSC32_IN, OSC_IN
-	A7	3	2	3	3	PC15-OSC32_OUT (PC15)	I/O	FT	(1)(2)	OSC32_EN, OSC_EN	OSC32_OUT
-	-	-	-	-	4	VBAT	S	-	-	-	VBAT
-	-	-	-	-	5	VREF+	S	-	-	-	VREF_OUT
2	C7	4	3	4	6	VDD/VDDA	S	-	-	-	-
3	D6	5	4	5	7	VSS/VSSA	S	-	-	-	-
-	-	-	-	-	8	PF0-OSC_IN (PF0)	I/O	FT	-	TIM14_CH1	OSC_IN
-	-	-	-	-	9	PF1-OSC_OUT (PF1)	I/O	FT	-	OSC_EN	OSC_OUT
4	E7	6	5	6	10	PF2-NRST	I/O	RST, FT	(3)	MCO	NRST
4	E7	7	6	7	11	PA0	I/O	FT_a	(3)	SPI2_SCK, USART2_CTS, TIM2_CH1_ETR, LPTIM1_OUT	ADC_IN0, TAMP_IN2,WKUP1
4	C5	8	7	8	12	PA1	I/O	FT_ea	(3)	SPI1_SCK/I2S1_CK, USART2_RTS_DE_CK, TIM2_CH2, I2C1_SMBA, EVENTOUT	ADC_IN1
4	E5	9	8	9	13	PA2	I/O	FT_a	(3)	SPI1_MOSI/I2S1_SD, USART2_TX, TIM2_CH3, LPUART1_TX	ADC_IN2, WKUP4,LSCO
-	D4	10	9	10	14	PA3	I/O	FT_ea	-	SPI2_MISO, USART2_RX, TIM2_CH4, LPUART1_RX, EVENTOUT	ADC_IN3
-	-	-	-	-	15	PA4	I/O	FT_a	-	SPI1_NSS/I2S1_WS, SPI2_MOSI, TIM14_CH1, LPTIM2_OUT, EVENTOUT	ADC_IN4, RTC_OUT2

Table 12. Pin assignment and description (continued)

Pin						Pin name (function upon reset)	Pin type	I/O structure	Note	Alternate functions	Additional functions
SO8N	WLCSP18	TSSOP20	UFQFPN28	LQFP32 / UFQFPN32	LQFP48 / UFQFPN48						
-	D4	11	10	11	-	PA4	I/O	FT_a	-	SPI1_NSS/I2S1_WS, SPI2_MOSI, TIM14_CH1, LPTIM2_OUT, EVENTOUT	ADC_IN4, TAMP_IN1, RTC_TS, RTC_OUT1, WKUP2
-	C3	12	11	12	16	PA5	I/O	FT_ea	-	SPI1_SCK/I2S1_CK, TIM2_CH1_ETR, LPTIM2_ETR, EVENTOUT	ADC_IN5
-	E3	13	12	13	17	PA6	I/O	FT_ea	-	SPI1_MISO/I2S1_MCK, TIM3_CH1, TIM1_BK, TIM16_CH1, LPUART1_CTS	ADC_IN6
-	D2	14	13	14	18	PA7	I/O	FT_a	-	SPI1_MOSI/I2S1_SD, TIM3_CH2, TIM1_CH1N, TIM14_CH1, TIM17_CH1	ADC_IN7
5	E1	15	14	15	19	PB0	I/O	FT_ea	-	SPI1_NSS/I2S1_WS, TIM3_CH3, TIM1_CH2N, LPTIM1_OUT	ADC_IN8
5	E1	15	15	16	20	PB1	I/O	FT_ea	-	TIM14_CH1, TIM3_CH4, TIM1_CH3N, LPTIM2_IN1, LPUART1_RTS_DE, EVENTOUT	ADC_IN9
-	E1	15	-	17	21	PB2	I/O	FT_ea	-	SPI2_MISO, LPTIM1_OUT, EVENTOUT	ADC_IN10
-	-	-	-	-	22	PB10	I/O	FT_fa	-	LPUART1_RX, TIM2_CH3, SPI2_SCK, I2C2_SCL	ADC_IN11
-	-	-	-	-	23	PB11	I/O	FT_fa	-	SPI2_MOSI, LPUART1_TX, TIM2_CH4, I2C2_SDA	ADC_IN15
-	-	-	-	-	24	PB12	I/O	FT_a	-	SPI2_NSS, LPUART1_RTS_DE, TIM1_BK, EVENTOUT	ADC_IN16
-	-	-	-	-	25	PB13	I/O	FT_f	-	SPI2_SCK, LPUART1_CTS, TIM1_CH1N, I2C2_SCL, EVENTOUT	-
-	-	-	-	-	26	PB14	I/O	FT_f	-	SPI2_MISO, TIM1_CH2N, I2C2_SDA, EVENTOUT	-
-	-	-	-	-	27	PB15	I/O	FT	-	SPI2_MOSI, TIM1_CH3N, EVENTOUT	RTC_REFIN
5	E1	15	16	18	28	PA8	I/O	FT	-	MCO, SPI2_NSS, TIM1_CH1, LPTIM2_OUT, EVENTOUT	-

Table 12. Pin assignment and description (continued)

Pin						Pin name (function upon reset)	Pin type	I/O structure	Note	Alternate functions	Additional functions
SO8N	WLCSP18	TSSOP20	UFQFPN28	LQFP32 / UFQFPN32	LQFP48 / UFQFPN48						
-	-	-	-	19	29	PA9	I/O	FT_f	-	MCO, USART1_TX, TIM1_CH2, SPI2_MISO, I2C1_SCL, EVENTOUT	-
-	-	-	17	20	30	PC6	I/O	FT	-	TIM3_CH1, TIM2_CH3	-
-	-	-	-	-	31	PC7	I/O	FT	-	TIM3_CH2, TIM2_CH4	-
-	-	-	-	21	32	PA10	I/O	FT_f	-	SPI2_MOSI, USART1_RX, TIM1_CH3, TIM17_BK, I2C1_SDA, EVENTOUT	-
-	-	-	-	-	33	PA11 [PA9]	I/O	FT_f	(4)	SPI1_MISO/I2S1_MCK, USART1_CTS, TIM1_CH4, TIM1_BK2, I2C2_SCL	-
5	C1	16	18	22	-	PA11 [PA9]	I/O	FT_fa	(4)	SPI1_MISO/I2S1_MCK, USART1_CTS, TIM1_CH4, TIM1_BK2, I2C2_SCL	ADC_IN15
-	-	-	-	-	34	PA12 [PA10]	I/O	FT_f	(4)	SPI1_MOSI/I2S1_SD, USART1_RTS_DE_CK, TIM1_ETR, I2S_CKIN, I2C2_SDA	-
6	B2	17	19	23	-	PA12 [PA10]	I/O	FT_fa	(4)	SPI1_MOSI/I2S1_SD, USART1_RTS_DE_CK, TIM1_ETR, I2S_CKIN, I2C2_SDA	ADC_IN16
7	A1	18	20	24	35	PA13	I/O	FT_ea	(5)	SWDIO, IR_OUT, EVENTOUT	ADC_IN17
8	A3	19	21	25	36	PA14-BOOT0	I/O	FT_a	(5)	SWCLK, USART2_TX, EVENTOUT	ADC_IN18, BOOT0
8	A3	19	22	26	37	PA15	I/O	FT	-	SPI1_NSS/I2S1_WS, USART2_RX, TIM2_CH1_ETR, EVENTOUT	-
-	-	-	-	-	38	PD0	I/O	FT	-	EVENTOUT, SPI2_NSS, TIM16_CH1	-
-	-	-	-	-	39	PD1	I/O	FT	-	EVENTOUT, SPI2_SCK, TIM17_CH1	-
-	-	-	-	-	40	PD2	I/O	FT	-	TIM3_ETR, TIM1_CH1N	-
-	-	-	-	-	41	PD3	I/O	FT	-	USART2_CTS, SPI2_MISO, TIM1_CH2N	-

Table 12. Pin assignment and description (continued)

Pin						Pin name (function upon reset)	Pin type	I/O structure	Note	Alternate functions	Additional functions
SO8N	WLCSP18	TSSOP20	UFQFPN28	LQFP32 / UFQFPN32	LQFP48 / UFQFPN48						
-	B4	20	23	27	42	PB3	I/O	FT	-	SPI1_SCK/I2S1_CK, TIM1_CH2, TIM2_CH2, USART1_RTS_DE_CK, EVENTOUT	-
-	B4	20	24	28	43	PB4	I/O	FT	-	SPI1_MISO/I2S1_MCK, TIM3_CH1, USART1_CTS, TIM17_BK, EVENTOUT	-
8	B4	20	25	29	44	PB5	I/O	FT	-	SPI1_MOSI/I2S1_SD, TIM3_CH2, TIM16_BK, LPTIM1_IN1, I2C1_SMBA	WKUP6
8	B4	20	26	30	45	PB6	I/O	FT_f	-	USART1_TX, TIM1_CH3, TIM16_CH1N, SPI2_MISO, LPTIM1_ETR, I2C1_SCL, EVENTOUT	-
-	-	-	-	-	46	PB7	I/O	FT_f	-	USART1_RX, SPI2_MOSI, TIM17_CH1N, LPTIM1_IN2, I2C1_SDA, EVENTOUT	PVD_IN
1	A5	1	27	31	-	PB7	I/O	FT_fa	-	USART1_RX, SPI2_MOSI, TIM17_CH1N, LPTIM1_IN2, I2C1_SDA, EVENTOUT	ADC_IN11, PVD_IN
1	A5	1	28	32	47	PB8	I/O	FT_f	-	SPI2_SCK, TIM16_CH1, I2C1_SCL, EVENTOUT	-
1	B6	2	-	1	48	PB9	I/O	FT_f	-	IR_OUT, TIM17_CH1, SPI2_NSS, I2C1_SDA, EVENTOUT	-

1. PC13, PC14 and PC15 are supplied through the power switch. Since the switch only sinks a limited amount of current (3 mA), the use of GPIOs PC13 to PC15 in output mode is limited:
   - The speed should not exceed 2 MHz with a maximum load of 30 pF
   - These GPIOs must not be used as current sources (for example to drive a LED).
2. After an RTC domain power-up, PC13, PC14 and PC15 operate as GPIOs. Their function then depends on the content of the RTC registers. The RTC registers are not reset upon system reset. For details on how to manage these GPIOs, refer to the RTC domain and RTC register descriptions in the RM0444 reference manual.
3. RST I/O structure when the PF2-NRST pin is configured as reset (input or input/output mode), FT I/O structure when the PF2-NRST pin is configured as GPIO. The PF2-NRST default functionality is NRST. If used in this mode on SO8 and WLCSP, take particular care about the configuration of the other I/Os connected to this pin.
4. Pins PA9 and PA10 can be remapped in place of pins PA11 and PA12 (default mapping), using SYSCFG_CFGR1 register.
5. Upon reset, these pins are configured as SWD alternate functions, and the internal pull-up on PA13 pin and the internal pull-down on PA14 pin are activated.

Table 13. Port A alternate function mapping

Port	AF0	AF1	AF2	AF3	AF4	AF5	AF6	AF7
PA0	SPI2_SCK	USART2_CTS	TIM2_CH1_ETR	-	-	LPTIM1_OUT	-	-
PA1	SPI1_SCK/ I2S1_CK	USART2_RTS _DE_CK	TIM2_CH2	-	-	-	I2C1_SMBA	EVENTOUT
PA2	SPI1_MOSI/ I2S1_SD	USART2_TX	TIM2_CH3	-	-	-	LPUART1_TX	-
PA3	SPI2_MISO	USART2_RX	TIM2_CH4	-	-	-	LPUART1_RX	EVENTOUT
PA4	SPI1_NSS/ I2S1_WS	SPI2_MOSI	-	-	TIM14_CH1	LPTIM2_OUT	-	EVENTOUT
PA5	SPI1_SCK/ I2S1_CK	-	TIM2_CH1_ETR	-	-	LPTIM2_ETR	-	EVENTOUT
PA6	SPI1_MISO/ I2S1_MCK	TIM3_CH1	TIM1_BKIN	-	-	TIM16_CH1	LPUART1_CTS	-
PA7	SPI1_MOSI/ I2S1_SD	TIM3_CH2	TIM1_CH1N	-	TIM14_CH1	TIM17_CH1	-	-
PA8	MCO	SPI2_NSS	TIM1_CH1	-	-	LPTIM2_OUT	-	EVENTOUT
PA9	MCO	USART1_TX	TIM1_CH2	-	SPI2_MISO	-	I2C1_SCL	EVENTOUT
PA10	SPI2_MOSI	USART1_RX	TIM1_CH3	-	-	TIM17_BKIN	I2C1_SDA	EVENTOUT
PA11	SPI1_MISO/ I2S1_MCK	USART1_CTS	TIM1_CH4	-	-	TIM1_BKIN2	I2C2_SCL	-
PA12	SPI1_MOSI/ I2S1_SD	USART1_RTS _DE_CK	TIM1_ETR	-	-	I2S_CKIN	I2C2_SDA	-
PA13	SWDIO	IR_OUT	-	-	-	-	-	EVENTOUT
PA14	SWCLK	USART2_TX	-	-	-	-	-	EVENTOUT
PA15	SPI1_NSS/ I2S1_WS	USART2_RX	TIM2_CH1_ETR	-	-	-	-	EVENTOUT

Table 14. Port B alternate function mapping

Port	AF0	AF1	AF2	AF3	AF4	AF5	AF6	AF7
PB0	SPI1_NSS/ I2S1_WS	TIM3_CH3	TIM1_CH2N	-	-	LPTIM1_OUT	-	-
PB1	TIM14_CH1	TIM3_CH4	TIM1_CH3N	-	-	LPTIM2_IN1	LPUART1_RTS _DE	EVENTOUT
PB2	-	SPI2_MISO	-	-	-	LPTIM1_OUT	-	EVENTOUT
PB3	SPI1_SCK/ I2S1_CK	TIM1_CH2	TIM2_CH2	-	USART1_RTS _DE_CK	-	-	EVENTOUT
PB4	SPI1_MISO/ I2S1_MCK	TIM3_CH1	-	-	USART1_CTS	TIM17_BKIN	-	EVENTOUT
PB5	SPI1_MOSI/ I2S1_SD	TIM3_CH2	TIM16_BKIN	-	-	LPTIM1_IN1	I2C1_SMBA	-
PB6	USART1_TX	TIM1_CH3	TIM16_CH1N	-	SPI2_MISO	LPTIM1_ETR	I2C1_SCL	EVENTOUT
PB7	USART1_RX	SPI2_MOSI	TIM17_CH1N	-	-	LPTIM1_IN2	I2C1_SDA	EVENTOUT
PB8	-	SPI2_SCK	TIM16_CH1	-	-	-	I2C1_SCL	EVENTOUT
PB9	IR_OUT	-	TIM17_CH1	-	-	SPI2_NSS	I2C1_SDA	EVENTOUT
PB10	-	LPUART1_RX	TIM2_CH3	-	-	SPI2_SCK	I2C2_SCL	-
PB11	SPI2_MOSI	LPUART1_TX	TIM2_CH4	-	-	-	I2C2_SDA	-
PB12	SPI2_NSS	LPUART1_RTS _DE	TIM1_BKIN	-	-	-	-	EVENTOUT
PB13	SPI2_SCK	LPUART1_CTS	TIM1_CH1N	-	-	-	I2C2_SCL	EVENTOUT
PB14	SPI2_MISO	-	TIM1_CH2N	-	-	-	I2C2_SDA	EVENTOUT
PB15	SPI2_MOSI	-	TIM1_CH3N	-	-	-	-	EVENTOUT

Table 15. Port C alternate function mapping

Port	AF0	AF1	AF2	AF3	AF4	AF5	AF6	AF7
PC6	-	TIM3_CH1	TIM2_CH3	-	-	-	-	-
PC7	-	TIM3_CH2	TIM2_CH4	-	-	-	-	-
PC13	-	-	TIM1_BKIN	-	-	-	-	-
PC14	-	-	TIM1_BKIN2	-	-	-	-	-
PC15	OSC32_EN	OSC_EN	-	-	-	-	-	-

Table 16. Port D alternate function mapping

Port	AF0	AF1	AF2	AF3	AF4	AF5	AF6	AF7
PD0	EVENTOUT	SPI2_NSS	TIM16_CH1	-	-	-	-	-
PD1	EVENTOUT	SPI2_SCK	TIM17_CH1	-	-	-	-	-
PD2	-	TIM3_ETR	TIM1_CH1N	-	-	-	-	-
PD3	USART2_CTS	SPI2_MISO	TIM1_CH2N	-	-	-	-	-

Table 17. Port F alternate function mapping

Port	AF0	AF1	AF2	AF3	AF4	AF5	AF6	AF7
PF0	-	-	TIM14_CH1	-	-	-	-	-
PF1	OSC_EN	-	-	-	-	-	-	-
PF2	MCO	-	-	-	-	-	-	-

5 Electrical characteristics

5.1 Parameter conditions

Unless otherwise specified, all voltages are referenced to V_{SS}.

Parameter values defined at temperatures or in temperature ranges out of the ordering information scope are to be ignored.

Packages used for characterizing certain electrical parameters may differ from the commercial packages as per the ordering information.

5.1.1 Minimum and maximum values

Unless otherwise specified, the minimum and maximum values are guaranteed in the worst conditions of ambient temperature, supply voltage and frequencies by tests in production on 100% of the devices with an ambient temperature at T_A = 25 °C and T_A = T_A(max) (given by the selected temperature range).

Data based on characterization results, design simulation and/or technology characteristics are indicated in the table footnotes and are not tested in production. Based on characterization, the minimum and maximum values refer to sample tests and represent the mean value plus or minus three times the standard deviation (mean ±3σ).

5.1.2 Typical values

Unless otherwise specified, typical data are based on T_A = 25 °C, V_{DD} = V_{DDA} = 3 V. They are given only as design guidelines and are not tested.

Typical ADC accuracy values are determined by characterization of a batch of samples from a standard diffusion lot over the full temperature range, where 95% of the devices have an error less than or equal to the value indicated (mean ±2σ).

5.1.3 Typical curves

Unless otherwise specified, all typical curves are given only as design guidelines and are not tested.

5.1.4 Loading capacitor

The loading conditions used for pin parameter measurement are shown in *Figure 11*.

5.1.5 Pin input voltage

The input voltage measurement on a pin of the device is described in *Figure 12*.

Figure 11. Pin loading conditions

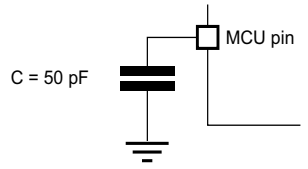

Figure 12. Pin input voltage

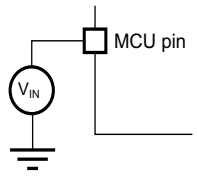

5.1.6 Power supply scheme

Figure 13. Power supply scheme

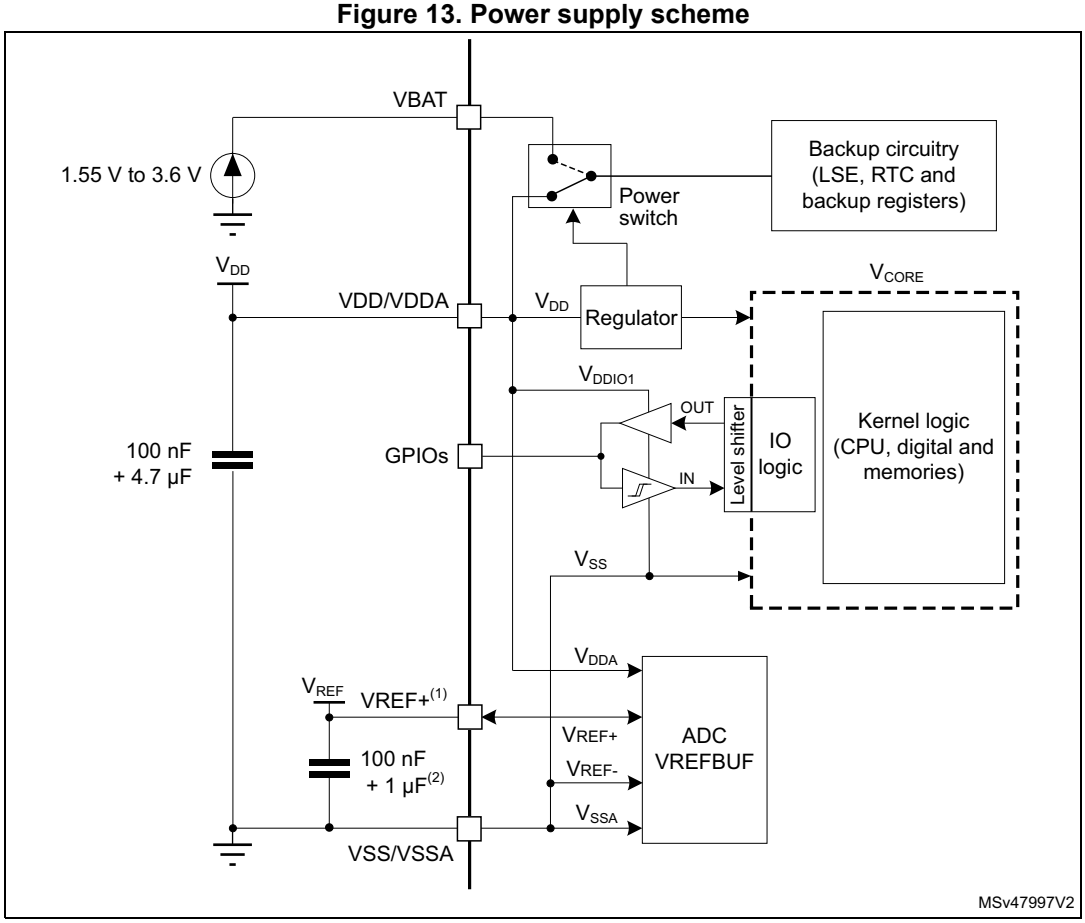

1. Internally connected to V_{DDA} on devices without VREF+ pin.
2. Only required when VREFBUF is used.

Caution: Power supply pin pair (VDD/VDDA and VSS/VSSA) must be decoupled with filtering ceramic capacitors as shown above. These capacitors must be placed as close as possible to, or below, the appropriate pins on the underside of the PCB to ensure the good functionality of the device.

5.1.7 Current consumption measurement

Figure 14. Current consumption measurement scheme

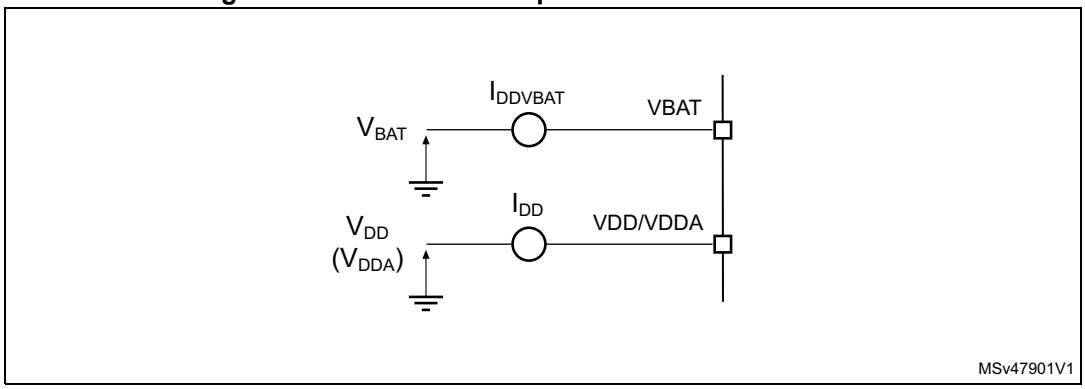

5.2 Absolute maximum ratings

Stresses above the absolute maximum ratings listed in *Table 18*, *Table 19* and *Table 20* may cause permanent damage to the device. These are stress ratings only and functional operation of the device at these conditions is not implied. Exposure to maximum rating conditions for extended periods may affect device reliability. The device mission profile (application conditions) is compliant with the JEDEC JESD47 qualification standard.

All voltages are defined with respect to V_{SS}.

Table 18. Voltage characteristics

Symbol	Ratings	Min	Max	Unit
V_{DD}	External supply voltage	-0.3	4.0	V
V_{BAT}	External supply voltage on VBAT pin	-0.3	4.0	V
V_{REF+}	External voltage on VREF+ pin	-0.3	Min(V_{DD} + 0.4, 4.0)	V
V_{IN}(1)	Input voltage on FT_xx	-0.3	V_{DD} + 4.0(2)(3)	V
	Input voltage on any other pin	-0.3	4.0	

1. Refer to *Table 19* for the maximum allowed injected current values.
2. To sustain a voltage higher than 4 V the internal pull-up/pull-down resistors must be disabled.
3. When an FT_a pin is used by an analog peripheral such as ADC, the maximum V_{IN} is 4 V.

Table 19. Current characteristics

Symbol	Ratings	Max	Unit
$I_{VDD/VDDA}$	Current into VDD/VDDA power pin (source)(1)	100	mA
$I_{VSS/VSSA}$	Current out of VSS/VSSA ground pin (sink)(2)	100	mA
$I_{IO(PIN)}$	Output current sunk by any I/O and control pin except FT_f	15	mA
	Output current sunk by any FT_f pin	20	
	Output current sourced by any I/O and control pin	15	

Table 19. Current characteristics (continued)

Symbol	Ratings	Max	Unit
$\Sigma I_{IO(PIN)}$	Total output current sunk by sum of all I/Os and control pins	80	mA
	Total output current sourced by sum of all I/Os and control pins	80	
$I_{INJ(PIN)}$(2)	Injected current on a FT_xx pin	-5 / NA(3)	mA
$\Sigma\|I_{INJ(PIN)}\|$	Total injected current (sum of all I/Os and control pins)(4)	25	mA

1. All main power (VDD/VDDA, VBAT) and ground (VSS/VSSA) pins must always be connected to the external power supplies, in the permitted range.
2. A positive injection is induced by $V_{IN} > V_{DDIO1}$ while a negative injection is induced by $V_{IN} < V_{SS}$. $I_{INJ(PIN)}$ must never be exceeded. Refer also to *Table 18: Voltage characteristics* for the maximum allowed input voltage values.
3. Positive injection is not possible on these I/Os and does not occur for input voltages lower than the specified maximum value.
4. When several inputs are submitted to a current injection, the maximum $\Sigma|I_{INJ(PIN)}|$ is the absolute sum of the negative injected currents (instantaneous values).

Table 20. Thermal characteristics

Symbol	Ratings	Value	Unit
T_{STG}	Storage temperature range	-65 to +150	°C
T_J	Maximum junction temperature	150	°C

5.3 Operating conditions

5.3.1 General operating conditions

Table 21. General operating conditions

Symbol	Parameter	Conditions	Min	Max	Unit
f_{HCLK}	Internal AHB clock frequency	-	0	64	MHz
f_{PCLK}	Internal APB clock frequency	-	0	64	
V_{DD}	Standard operating voltage	-	1.7(1)	3.6	V
V_{DDA}	Analog supply voltage	For ADC operation	1.62	3.6	V
		For VREFBUF operation	2.4	3.6	
V_{BAT}	Backup operating voltage	-	1.55	3.6	V
V_{IN}	I/O input voltage	All except RST	-0.3	Min(V_{DD} + 3.6, 5.5)(2)	V
		RST	-0.3	V_{DD} + 0.3	
T_A	Ambient temperature(3)	Suffix 6(4)	-40	85	°C
		Suffix 7(4)	-40	105	
		Suffix 3(4)	-40	125	

Table 21. General operating conditions (continued)

Symbol	Parameter	Conditions	Min	Max	Unit
T_J	Junction temperature	Suffix 6(4)	-40	105	°C
		Suffix 7(4)	-40	125	
		Suffix 3(4)	-40	130	

1. When RESET is released functionality is guaranteed down to V_{PDR} min.
2. For operation with voltage higher than V_{DD} +0.3 V, the internal pull-up and pull-down resistors must be disabled.
3. The T_A(max) applies to P_D(max). At P_D < P_D(max) the ambient temperature is allowed to go higher than T_A(max) provided that the junction temperature T_J does not exceed T_J(max). Refer to *Section 6.10: Thermal characteristics*.
4. Temperature range digit in the order code. See *Section 7: Ordering information*.

5.3.2 Operating conditions at power-up / power-down

The parameters given in *Table 22* are derived from tests performed under the ambient temperature condition summarized in *Table 21*.

Table 22. Operating conditions at power-up / power-down

Symbol	Parameter	Conditions	Min	Max	Unit
t_{VDD}	V_{DD} slew rate	V_{DD} rising	-	∞	µs/V
		V_{DD} falling; ULPEN = 0	10	∞	
		V_{DD} falling; ULPEN = 1	100	∞	ms/V

5.3.3 Embedded reset and power control block characteristics

The parameters given in *Table 23* are derived from tests performed under the ambient temperature conditions summarized in *Table 21: General operating conditions*.

Table 23. Embedded reset and power control block characteristics

Symbol	Parameter	Conditions(1)	Min	Typ	Max	Unit
$t_{RSTTEMPO}$(2)	POR temporization when V_{DD} crosses V_{POR}	V_{DD} rising	-	250	400	µs
V_{POR}(2)	Power-on reset threshold	-	1.62	1.66	1.70	V
V_{PDR}(2)	Power-down reset threshold	-	1.60	1.64	1.69	V
V_{BOR1}	Brownout reset threshold 1	V_{DD} rising	2.05	2.10	2.18	V
		V_{DD} falling	1.95	2.00	2.08	
V_{BOR2}	Brownout reset threshold 2	V_{DD} rising	2.20	2.31	2.38	V
		V_{DD} falling	2.10	2.21	2.28	
V_{BOR3}	Brownout reset threshold 3	V_{DD} rising	2.50	2.62	2.68	V
		V_{DD} falling	2.40	2.52	2.58	
V_{BOR4}	Brownout reset threshold 4	V_{DD} rising	2.80	2.91	3.00	V
		V_{DD} falling	2.70	2.81	2.90	

Table 23. Embedded reset and power control block characteristics (continued)

Symbol	Parameter	Conditions[1]	Min	Typ	Max	Unit
V_{PVD0}	Programmable voltage detector threshold 0	V_{DD} rising	2.05	2.15	2.22	V
		V_{DD} falling	1.95	2.05	2.12	
V_{PVD1}	PVD threshold 1	V_{DD} rising	2.20	2.30	2.37	V
		V_{DD} falling	2.10	2.20	2.27	
V_{PVD2}	PVD threshold 2	V_{DD} rising	2.35	2.46	2.54	V
		V_{DD} falling	2.25	2.36	2.44	
V_{PVD3}	PVD threshold 3	V_{DD} rising	2.50	2.62	2.70	V
		V_{DD} falling	2.40	2.52	2.60	
V_{PVD4}	PVD threshold 4	V_{DD} rising	2.65	2.74	2.87	V
		V_{DD} falling	2.55	2.64	2.77	
V_{PVD5}	PVD threshold 5	V_{DD} rising	2.80	2.91	3.03	V
		V_{DD} falling	2.70	2.81	2.93	
V_{PVD6}	PVD threshold 6	V_{DD} rising	2.90	3.01	3.14	V
		V_{DD} falling	2.80	2.91	3.04	
$V_{hyst_POR_PDR}$	Hysteresis of V_{POR} and V_{PDR}	Hysteresis in continuous mode	-	20	-	mV
		Hysteresis in other mode	-	30	-	
$V_{hyst_BOR_PVD}$	Hysteresis of V_{BORx} and V_{PVDx}	-	-	100	-	mV
$I_{DD(BOR_PVD)}$[2]	BOR and PVD consumption	-	-	1.1	1.6	µA

1. Continuous mode means Run/Sleep modes, or temperature sensor enable in Low-power run/Low-power sleep modes.
2. Specified by design. Not tested in production.

5.3.4 Embedded voltage reference

The parameters given in *Table 24* are derived from tests performed under the ambient temperature and supply voltage conditions summarized in *Table 21: General operating conditions*.

Table 24. Embedded internal voltage reference

Symbol	Parameter	Conditions	Min	Typ	Max	Unit
V_{REFINT}	Internal reference voltage	-40°C < T_J < 130°C	1.182	1.212	1.232	V
$t_{S_vrefint}$ [1]	ADC sampling time when reading the internal reference voltage	-	4[2]	-	-	µs
$t_{start_vrefint}$	Start time of reference voltage buffer when ADC is enable	-	-	8	12[2]	µs
$I_{DD(VREFINTBUF)}$	V_{REFINT} buffer consumption from V_{DD} when converted by ADC	-	-	12.5	20[2]	µA

Table 24. Embedded internal voltage reference (continued)

Symbol	Parameter	Conditions	Min	Typ	Max	Unit
ΔV_{REFINT}	Internal reference voltage spread over the temperature range	V_{DD} = 3 V	-	5	7.5(2)	mV
$T_{Coeff_vrefint}$	Temperature coefficient	-	-	30	50(2)	ppm/°C
A_{Coeff}	Long term stability	1000 hours, T = 25 °C	-	300	1000(2)	ppm
$V_{DDCoeff}$	Voltage coefficient	3.0 V < V_{DD} < 3.6 V	-	250	1200(2)	ppm/V
V_{REFINT_DIV1}	1/4 reference voltage	-	24	25	26	% V_{REFINT}
V_{REFINT_DIV2}	1/2 reference voltage		49	50	51	
V_{REFINT_DIV3}	3/4 reference voltage		74	75	76	

1. The shortest sampling time can be determined in the application by multiple iterations.
2. Specified by design. Not tested in production.

Figure 15. V_{REFINT} vs. temperature

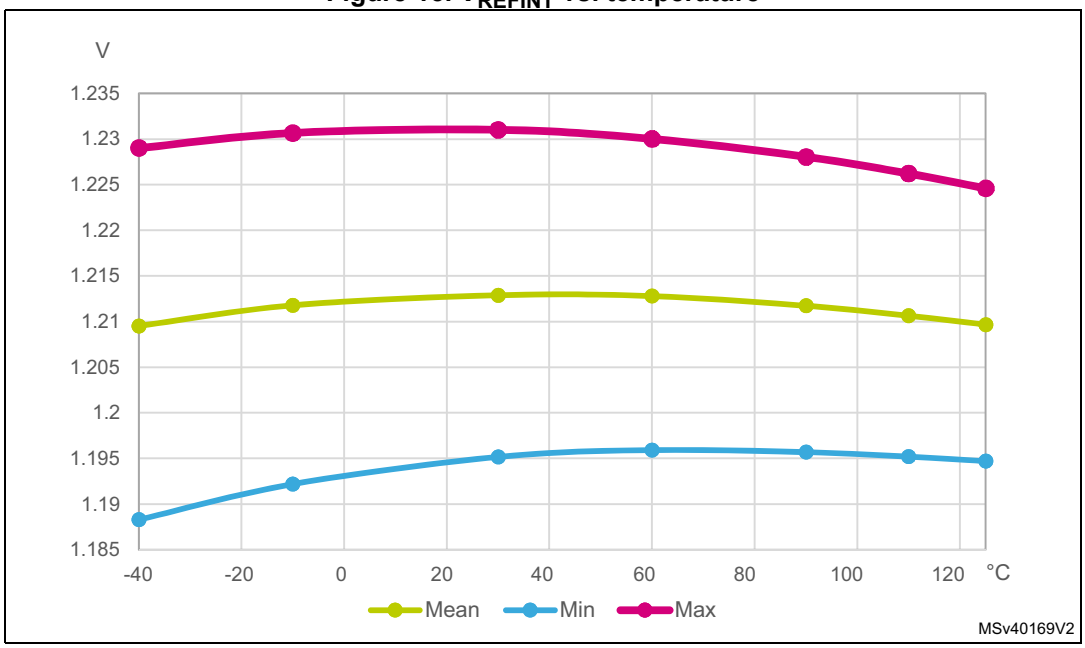

5.3.5 Supply current characteristics

The current consumption is a function of several parameters and factors such as the operating voltage, ambient temperature, I/O pin loading, device software configuration, operating frequencies, I/O pin switching rate, program location in memory and executed binary code.

The current consumption is measured as described in *Figure 14: Current consumption measurement scheme*.

Typical and maximum current consumption

The MCU is placed under the following conditions:

- All I/O pins are in analog input mode
- All peripherals are disabled except when explicitly mentioned
- The flash memory access time is adjusted with the minimum wait states number, depending on the f_{HCLK} frequency (refer to the table “Number of wait states according to CPU clock (HCLK) frequency” available in the RM0444 reference manual).
- When the peripherals are enabled $f_{PCLK} = f_{HCLK}$
- For flash memory and shared peripherals $f_{PCLK} = f_{HCLK} = f_{HCLKS}$

Unless otherwise stated, values given in *Table 25* through *Table 33* are derived from tests performed under ambient temperature and supply voltage conditions summarized in *Table 21: General operating conditions*.

Table 25. Current consumption in Run and Low-power run modes at different die temperatures

Symbol	Parameter	Conditions			Typ			Max(1)			Unit
		General	f_{HCLK}	Fetch from(2)	25 °C	85 °C	125 °C	25 °C	85 °C	130 °C	
$I_{DD(Run)}$	Supply current in Run mode	Range 1; PLL enabled; $f_{HCLK} = f_{HSE_bypass}$ (≤16 MHz), $f_{HCLK} = f_{PLLRCLK}$ (>16 MHz); (3)	64 MHz	Flash memory	5.2	5.4	5.6	6.7	6.9	7.6	mA
			56 MHz		4.7	4.8	4.9	5.9	6.0	6.6	
			48 MHz		4.2	4.3	4.5	4.8	5.0	5.6	
			32 MHz		2.9	3.0	3.2	3.8	4.1	4.7	
			24 MHz		2.3	2.4	2.5	2.9	3.2	3.9	
			16 MHz		1.5	1.5	1.7	2.1	2.4	3.0	
			64 MHz	SRAM	4.3	4.4	4.6	6.0	6.2	6.6	
			56 MHz		3.8	3.9	4.1	5.4	5.6	5.9	
			48 MHz		3.4	3.5	3.7	4.8	5.0	5.3	
			32 MHz		2.4	2.5	2.6	3.4	3.6	3.9	
			24 MHz		1.9	1.9	2.0	2.7	2.9	3.3	
			16 MHz		1.2	1.2	1.4	1.9	2.0	2.5	
		Range 2; PLL enabled; $f_{HCLK} = f_{HSE_bypass}$ (≤16 MHz), $f_{HCLK} = f_{PLLRCLK}$ (>16 MHz); (3)	16 MHz	Flash memory	1.2	1.2	1.4	1.6	1.9	2.5	
			8 MHz		0.7	0.7	0.8	1.1	1.3	1.7	
			2 MHz		0.2	0.3	0.4	0.5	0.8	1.3	
			16 MHz	SRAM	1.0	1.0	1.2	1.5	1.7	2.1	
			8 MHz		0.5	0.6	0.7	1.0	1.1	1.5	
			2 MHz		0.2	0.3	0.4	0.5	0.7	1.2	

Table 25. Current consumption in Run and Low-power run modes at different die temperatures (continued)

Symbol	Parameter	Conditions			Typ			Max(1)			Unit
		General	f_{HCLK}	Fetch from(2)	25 °C	85 °C	125 °C	25 °C	85 °C	130 °C	
$I_{DD(LPRun)}$	Supply current in Low-power run mode	PLL disabled; $f_{HCLK} = f_{HSE}$ bypass (> 32 kHz), $f_{HCLK} = f_{LSE}$ bypass (= 32 kHz); (3)	2 MHz	Flash memory	165	205	305	470	660	1190	µA
			1 MHz		90	120	225	400	580	1140	
			500 kHz		53	81	185	360	530	1060	
			125 kHz		23	51	155	310	500	990	
			32 kHz		16	43	145	270	400	990	
			2 MHz	SRAM	146	174	275	460	660	1160	
			1 MHz		83	104	195	390	630	1080	
			500 kHz		44	74	155	340	590	1050	
			125 kHz		19	46	135	300	420	920	
			32 kHz		14	34	130	260	340	890	

1. Based on characterization results, not tested in production.
2. Prefetch and cache enabled when fetching from flash memory. Code compiled with high optimization for space in SRAM.
3. V_{DD} = 3.0 V for values in Typ columns and 3.6 V for values in Max columns, all peripherals disabled, cache enabled, prefetch disabled for code and data fetch from Flash and enabled from SRAM

Table 26. Typical current consumption in Run and Low-power run modes, depending on code executed

Symbol	Parameter	Conditions			Typ	Unit	Typ	Unit
		General	Code	Fetch from(1)	25 °C		25 °C	
$I_{DD(Run)}$	Supply current in Run mode	Range 1; $f_{HCLK} = f_{PLLRCLK}$ = 64 MHz; (2)	Reduced code(3)	Flash memory	5.4	mA	84	uA/MHz
			Coremark		5.2		81	
			Dhrystone 2.1		5.3		82	
			Fibonacci		4.3		67	
			While(1) loop		4.0		62	
			Reduced code(3)	SRAM	4.4		69	
			Coremark		5.6		88	
			Dhrystone 2.1		5.6		88	
			Fibonacci		4.3		67	
			While(1) loop		4.0		63	
		Range 2; $f_{HCLK} = f_{HSI16}$ = 16 MHz, PLL disabled, (2)	Reduced code(3)	Flash memory	1.6		100	
			Coremark		1.5		81	
			Dhrystone 2.1		1.5		81	
			Fibonacci		1.1		66	
			While(1) loop		1.0		59	
			Reduced code(3)	SRAM	1.3		78	
			Coremark		1.4		88	
			Dhrystone 2.1		1.4		88	
			Fibonacci		1.0		63	
			While(1) loop		1.0		60	
$I_{DD(LPRun)}$	Supply current in Low-power run mode	$f_{HCLK} = f_{HSI16}/8$ = 2 MHz; PLL disabled, (2)	Reduced code(3)	Flash memory	345	uA	173	uA/MHz
			Coremark		400		200	
			Dhrystone 2.1		400		200	
			Fibonacci		365		183	
			While(1) loop		415		208	
			Reduced code(3)	SRAM	225		113	
			Coremark		515		258	
			Dhrystone 2.1		515		258	
			Fibonacci		295		148	
			While(1) loop		290		145	

1. Prefetch and cache enabled when fetching from flash memory. Code compiled with high optimization for space in SRAM.
2. V_{DD} = 3.3 V, all peripherals disabled, cache enabled, prefetch disabled for execution in flash memory and enabled in SRAM
3. Reduced code used for characterization results provided in *Table 25*.

Table 27. Current consumption in Sleep and Low-power sleep modes

Symbol	Parameter	Conditions			Typ			Max(1)			Unit
		General	Voltage scaling	f_{HCLK}	25 °C	85 °C	125 °C	25 °C	85 °C	130 °C	
$I_{DD(Sleep)}$	Supply current in Sleep mode	Flash memory enabled; $f_{HCLK} = f_{HSE}$ bypass (≤16 MHz; PLL disabled), $f_{HCLK} = f_{PLLRCLK}$ (>16 MHz; PLL enabled); All peripherals disabled	Range 1	64 MHz	1.3	1.4	1.5	1.8	2.0	2.8	mA
				56 MHz	1.2	1.3	1.4	1.6	1.8	2.7	
				48 MHz	1.1	1.1	1.3	1.5	1.6	2.6	
				32 MHz	0.8	0.8	1.0	1.2	1.2	2.2	
				24 MHz	0.7	0.7	0.8	0.9	1.0	1.8	
				16 MHz	0.4	0.4	0.5	0.6	0.7	1.6	
			Range 2	16 MHz	0.3	0.4	0.5	0.5	0.6	1.3	
				8 MHz	0.2	0.3	0.4	0.3	0.5	1.2	
				2 MHz	0.1	0.2	0.3	0.2	0.4	1.1	
$I_{DD(LPSleep)}$	Supply current in Low-power sleep mode	Flash memory disabled; PLL disabled; $f_{HCLK} = f_{HSE}$ bypass (> 32 kHz), $f_{HCLK} = f_{LSE}$ bypass (= 32 kHz); All peripherals disabled		2 MHz	40	70	175	145	340	1055	µA
				1 MHz	27	55	155	125	315	960	
				500 kHz	21	47	150	120	240	825	
				125 kHz	15	42	145	110	225	680	
				32 kHz	12	40	140	105	215	630	

1. Based on characterization results, not tested in production.

Table 28. Current consumption in Stop 0 mode

Symbol	Parameter	Conditions		Typ			Max(1)			Unit
		HSI kernel	V_{DD}	25°C	85°C	125°C	25°C	85°C	130°C	
$I_{DD(Stop\ 0)}$	Supply current in Stop 0 mode	Enabled	1.8 V	265	290	375	330	420	745	µA
			2.4 V	265	290	375	330	450	840	
			3 V	270	295	380	345	485	940	
			3.6 V	270	295	385	370	495	1000	
		Disabled	1.8 V	92	130	225	120	180	490	
			2.4 V	95	130	225	120	220	605	
			3 V	97	135	230	125	235	710	
			3.6 V	99	135	235	125	245	830	

1. Based on characterization results, not tested in production.

Table 29. Current consumption in Stop 1 mode

Symbol	Parameter	Conditions			Typ			Max(1)			Unit
		Flash memory	RTC(2)	V_{DD}	25°C	85°C	125°C	25°C	85°C	130°C	
$I_{DD(Stop\ 1)}$	Supply current in Stop 1 mode	Not powered	Disabled	1.8 V	2.9	25	105	9	95	590	µA
				2.4 V	3.1	26	110	11	110	600	
				3 V	3.3	26	110	16	120	610	
				3.6 V	3.6	26	110	20	130	610	
			Enabled	1.8 V	3.3	25	105	11	95	610	
				2.4 V	3.6	26	110	14	110	615	
				3 V	3.7	26	110	18	120	620	
				3.6 V	4.2	27	110	23	130	630	
		Powered	Disabled	1.8 V	7.0	30	110	17	130	630	
				2.4 V	7.3	30	115	18	135	640	
				3 V	7.5	30	115	19	140	660	
				3.6 V	7.8	31	115	23	140	700	

1. Based on characterization results, not tested in production.
2. Clocked by LSI

Table 30. Current consumption in Standby mode

Symbol	Parameter	Conditions		Typ			Max(1)			Unit
		General	V_{DD}	25°C	85°C	125°C	25°C	85°C	130°C	
$I_{DD(Standby)}$	Supply current in Standby mode(2)	RTC disabled	1.8 V	0.1	1.5	5	0.7	9	30	µA
			2.4 V	0.1	1.8	6	0.7	11	34	
			3.0 V	0.2	2.1	7	0.9	14	39	
			3.6 V	0.4	2.5	8	1.0	16	45	
		RTC enabled, clocked by LSI;	1.8 V	0.3	1.7	5	0.8	14	33	
			2.4 V	0.4	2.1	6	1.0	14	39	
			3.0 V	0.6	2.5	7	1.2	16	46	
			3.6 V	0.8	3.0	8	1.6	16	54	
		IWDG enabled, clocked by LSI	1.8 V	0.2	1.6	5	0.8	10	32	
			2.4 V	0.3	2.0	6	0.8	12	37	
			3.0 V	0.4	2.4	7	1.1	14	44	
			3.6 V	0.7	2.8	8	1.7	17	51	
		ENB_ULP = 0	1.8 V	0.7	1.4	5	1.0	9	32	
			2.4 V	0.9	1.7	6	1.0	10	38	
			3.0 V	1.1	2.0	7	1.4	10	50	
			3.6 V	1.3	2.4	8	1.5	12	55	

Table 30. Current consumption in Standby mode (continued)

Symbol	Parameter	Conditions		Typ			Max(1)			Unit
		General	V_{DD}	25°C	85°C	125°C	25°C	85°C	130°C	
$\Delta I_{DD(SRAM)}$	Extra supply current to retain SRAM content(3)	SRAM retention enabled	1.8 V	0.3	0.8	3	0.4	7	21	µA
			2.4 V	0.4	0.9	3	0.9	8	21	
			3.0 V	0.5	1.0	3	1.3	8	23	
			3.6 V	0.6	1.1	4	1.3	9	22	

1. Based on characterization results, not tested in production.
2. Without SRAM retention and with ULPEN bit set
3. To be added to $I_{DD(Standby)}$ as appropriate

Table 31. Current consumption in Shutdown mode

Symbol	Parameter	Conditions		Typ			Max(1)			Unit
		RTC	V_{DD}	25 °C	85 °C	125 °C	25 °C	85 °C	130 °C	
$I_{DD(Shutdown)}$	Supply current in Shutdown mode	Disabled	1.8 V	12	370	2950	250	2700	26500	nA
			2.4 V	18	430	3350	450	3000	29500	
			3.0 V	25	500	3900	800	3700	33500	
			3.6 V	42	620	4550	900	4500	38500	
		Enabled, clocked by LSE bypass at 32.768 kHz	1.8 V	185	550	3100	850	2700	26500	
			2.4 V	265	675	3600	1450	3000	29500	
			3.0 V	350	835	4300	2350	3700	33500	
			3.6 V	460	1050	5050	3100	4400	38000	

1. Based on characterization results, not tested in production.

Table 32. Current consumption in VBAT mode

Symbol	Parameter	Conditions		Typ			Unit
		RTC	V_{DD}	25°C	85°C	125°C	
$I_{DD(VBAT)}$	Supply current in VBAT mode	Enabled, clocked by LSE bypass at 32.768 kHz	1.8 V	180	240	770	nA
			2.4 V	250	330	910	
			3.0 V	330	420	1080	
			3.6 V	430	550	1310	
		Enabled, clocked by LSE crystal at 32.768 kHz	1.8 V	300	360	840	
			2.4 V	380	420	1010	
			3.0 V	460	480	1190	
			3.6 V	580	700	1410	
		Disabled	1.8 V	1	59	590	
			2.4 V	1	68	660	
			3.0 V	2	78	740	
			3.6 V	5	97	860	

I/O system current consumption

The current consumption of the I/O system has two components: static and dynamic.

I/O static current consumption

All the I/Os used with internal or external pull-up or pull-down resistor generate current consumption when the pin is externally or internally tied low or high, respectively. The value of this current consumption can be simply computed by using the pull-up/pull-down resistor values. For internal pull-up/pull-down resistors, the indicative values are given in *Table 51: I/O static characteristics*. Any other external load must also be considered to estimate the current consumption.

Additional I/O current consumption is due to I/Os configured as inputs if an intermediate voltage level is externally applied. This current consumption is caused by the input Schmitt trigger circuits used to discriminate the input value. Unless this specific configuration is required by the application, this supply current consumption can be avoided by configuring these I/Os in analog mode. This is notably the case of ADC input pins which should be configured as analog inputs.

Caution: Any floating input pin can also settle to an intermediate voltage level or switch inadvertently, as a result of external electromagnetic noise. To avoid current consumption related to floating pins, they must either be configured in analog mode, or forced internally to a definite digital value. This can be done either by using pull-up/down resistors or by configuring the pins in output mode.

I/O dynamic current consumption

In addition to the internal peripheral current consumption measured previously (see *Table 33: Current consumption of peripherals*), the I/Os used by an application also contribute to the current consumption. When an I/O pin switches, it uses the current from the I/O supply voltage to supply the I/O pin circuitry and to charge/discharge the capacitive load (internal and external) connected to the pin:

$$I_{SW} = V_{DDIO1} \times f_{SW} \times C$$

where

I_{SW} is the current sunk by a switching I/O to charge/discharge the capacitive load

V_{DDIO1} is the I/O supply voltage

f_{SW} is the I/O switching frequency

C is the total capacitance seen by the I/O pin: $C = C_{INT} + C_{EXT} + C_S$

C_S is the PCB board capacitance including the pad pin.

The test pin is configured in push-pull output mode and is toggled by software at a fixed frequency.

On-chip peripheral current consumption

The current consumption of the on-chip peripherals is given in the following table. The MCU is placed under the following conditions:

- All I/O pins are in Analog mode
- The given value is calculated by measuring the difference of the current consumptions:
  - when the peripheral is clocked on
  - when the peripheral is clocked off
- Ambient operating temperature and supply voltage conditions summarized in *Table 18: Voltage characteristics*
- The power consumption of the digital part of the on-chip peripherals is given in the following table. The power consumption of the analog part of the peripherals (where applicable) is indicated in each related section of the datasheet.

Table 33. Current consumption of peripherals

Peripheral	Bus	Consumption in µA/MHz		
		Range 1	Range 2	Low-power run and sleep
IOPORT Bus	IOPORT	0.5	0.4	0.3
GPIOA	IOPORT	3.1	2.4	3.0
GPIOB	IOPORT	2.9	2.3	3.0
GPIOC	IOPORT	0.9	0.8	1.0
GPIOD	IOPORT	0.7	0.6	1.0
GPIOF	IOPORT	0.5	0.5	1.0
Bus matrix	AHB	3.2	2.2	2.8
All AHB Peripherals	AHB	9.8	8.2	8.5
DMA1/DMAMUX	AHB	3.4	2.9	3.0
CRC	AHB	0.5	0.4	0.5
FLASH	AHB	4.3	3.6	3.5
All APB peripherals	APB	23.5	20.0	20.5
AHB to APB bridge(1)	APB	0.2	0.2	0.1
PWR	APB	0.4	0.3	0.5
SYSCFG/VREFBUF	APB	0.4	0.4	0.5
WWDG	APB	0.2	0.3	0.5
TIM1	APB	7.0	5.9	6.5
TIM2	APB	4.7	3.8	3.5
TIM3	APB	3.6	3.1	3.5
TIM14	APB	1.5	1.3	1.5
TIM16	APB	2.3	2.0	2.5
TIM17	APB	1.0	0.8	0.3
LPTIM1	APB	3.1	2.7	3.0
LPTIM2	APB	2.7	2.3	2.5

Table 33. Current consumption of peripherals (continued)

Peripheral	Bus	Consumption in µA/MHz		
		Range 1	Range 2	Low-power run and sleep
I2C1	APB	3.2	2.7	3.0
I2C2	APB	0.7	0.6	1.0
SPI1	APB	2.2	1.8	2.0
SPI2	APB	1.3	1.1	1.5
USART1	APB	6.6	5.6	6.0
USART2	APB	1.8	1.5	2.0
LPUART1	APB	4.3	3.5	4.0
ADC	APB	1.6	1.5	1.5

1. The AHB to APB Bridge is automatically active when at least one peripheral is ON on the APB.

5.3.6 Wakeup time from low-power modes and voltage scaling transition times

The wakeup times given in *Table 34* are the latency between the event and the execution of the first user instruction.

Table 34. Low-power mode wakeup times(1)

Symbol	Parameter	Conditions	Typ	Max	Unit
$t_{WUSLEEP}$	Wakeup time from Sleep to Run mode	-	11	11	CPU cycles
$t_{WULPSLEEP}$	Wakeup time from Low-power sleep mode	Transiting to Low-power-run-mode execution in flash memory not powered in Low-power sleep mode; HCLK = HSI16 / 8 = 2 MHz	11	14	CPU cycles
$t_{WUSTOP0}$	Wakeup time from Stop 0	Transiting to Run-mode execution in flash memory not powered in Stop 0 mode; HCLK = HSI16 = 16 MHz; Regulator in Range 1 or Range 2	5.6	6	µs
		Transiting to Run-mode execution in SRAM or in flash memory powered in Stop 0 mode; HCLK = HSI16 = 16 MHz; Regulator in Range 1 or Range 2	2	2.4	

Table 34. Low-power mode wakeup times(1) (continued)

Symbol	Parameter	Conditions	Typ	Max	Unit
$t_{WUSTOP1}$	Wakeup time from Stop 1	Transiting to Run-mode execution in flash memory not powered in Stop 1 mode; HCLK = HSI16 = 16 MHz; Regulator in Range 1 or Range 2	9.0	11.2	µs
		Transiting to Run-mode execution in SRAM or in flash memory powered in Stop 1 mode; HCLK = HSI16 = 16 MHz; Regulator in Range 1 or Range 2	5	7.5	
		Transiting to Low-power-run-mode execution in flash memory not powered in Stop 1 mode; HCLK = HSI16/8 = 2 MHz; Regulator in low-power mode (LPR = 1 in PWR_CR1)	22	25.3	
		Transiting to Low-power-run-mode execution in SRAM or in flash memory powered in Stop 1 mode; HCLK = HSI16 / 8 = 2 MHz; Regulator in low-power mode (LPR = 1 in PWR_CR1)	18	23.5	
t_{WUSTBY}	Wakeup time from Standby mode	Transiting to Run mode; HCLK = HSI16 = 16 MHz; Regulator in Range 1	14.5	30	µs
t_{WUSHDN}	Wakeup time from Shutdown mode	Transiting to Run mode; HCLK = HSI16 = 16 MHz; Regulator in Range 1	258	340	µs
$t_{WULPRUN}$	Wakeup time from Low-power run mode(2)	Transiting to Run mode; HSISYS = HSI16/8 = 2 MHz	5	7	µs

1. Based on characterization results, not tested in production.
2. Time until REGLPF flag is cleared in PWR_SR2.

Table 35. Regulator mode transition times(1)

Symbol	Parameter	Conditions	Typ	Max	Unit
t_{VOST}	Transition times between regulator Range 1 and Range 2(2)	HSISYS = HSI16	20	40	µs

1. Based on characterization results, not tested in production.
2. Time until VOSF flag is cleared in PWR_SR2.

Table 36. Wakeup time using LPUART(1)

Symbol	Parameter	Conditions	Typ	Max	Unit
$t_{WULPUART}$	Wakeup time needed to calculate the maximum LPUART baud rate allowing to wakeup up from Stop mode when LPUART clock source is HSI16	Stop mode 0	-	1.7	µs
		Stop mode 1	-	8.5	

1. Specified by design. Not tested in production.

5.3.7 External clock source characteristics

High-speed external user clock generated from an external source

In bypass mode the HSE oscillator is switched off and the input pin is a standard GPIO.

The external clock signal has to respect the I/O characteristics in *Section 5.3.14*. See *Figure 16* for recommended clock input waveform.

Table 37. High-speed external user clock characteristics(1)

Symbol	Parameter	Conditions	Min	Typ	Max	Unit
f_{HSE_ext}	User external clock source frequency	Voltage scaling Range 1	-	8	48	MHz
		Voltage scaling Range 2	-	8	26	
V_{HSEH}	OSC_IN input pin high level voltage	-	0.7 V_{DDIO1}	-	V_{DDIO1}	V
V_{HSEL}	OSC_IN input pin low level voltage	-	V_{SS}	-	0.3 V_{DDIO1}	V
$t_{w(HSEH)}$ $t_{w(HSEL)}$	OSC_IN high or low time	Voltage scaling Range 1	7	-	-	ns
		Voltage scaling Range 2	18	-	-	

1. Specified by design. Not tested in production.

Figure 16. High-speed external clock source AC timing diagram

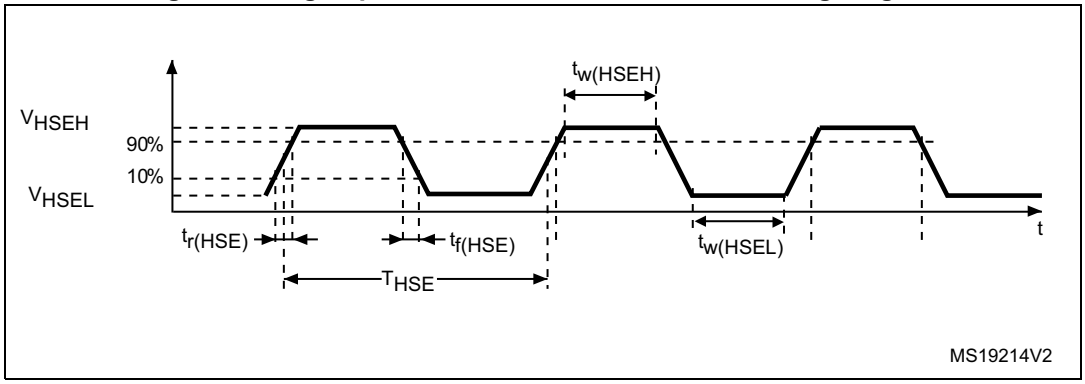

Low-speed external user clock generated from an external source

In bypass mode the LSE oscillator is switched off and the input pin is a standard GPIO.

The external clock signal has to respect the I/O characteristics in *Section 5.3.14*. See *Figure 17* for recommended clock input waveform.

Table 38. Low-speed external user clock characteristics(1)

Symbol	Parameter	Conditions	Min	Typ	Max	Unit
f_{LSE_ext}	User external clock source frequency	-	-	32.768	1000	kHz
V_{LSEH}	OSC32_IN input pin high level voltage	-	0.7 V_{DDIO1}	-	V_{DDIO1}	V

Table 38. Low-speed external user clock characteristics(1) (continued)

Symbol	Parameter	Conditions	Min	Typ	Max	Unit
V_{LSEL}	OSC32_IN input pin low level voltage	-	V_{SS}	-	0.3 V_{DDIO1}	V
$t_{w(LSEH)}$ $t_{w(LSEL)}$	OSC32_IN high or low time	-	250	-	-	ns

1. Specified by design. Not tested in production.

Figure 17. Low-speed external clock source AC timing diagram

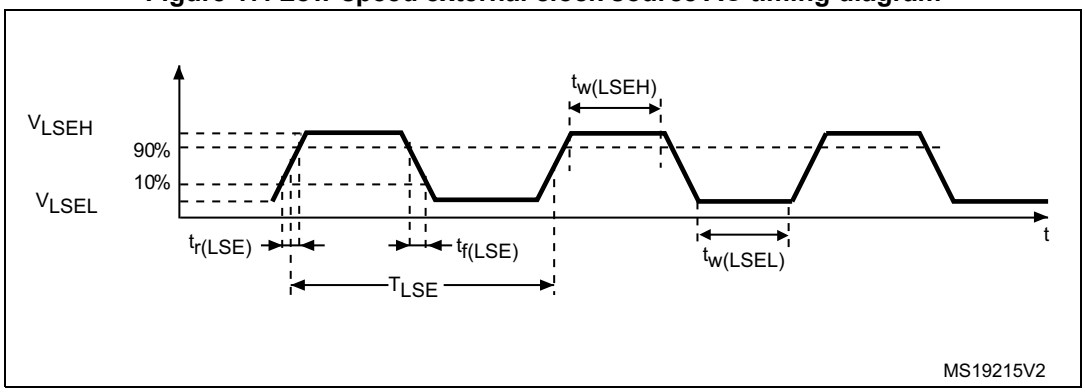

High-speed external clock generated from a crystal/ceramic resonator

The high-speed external (HSE) clock can be supplied with a 4 to 48 MHz crystal/ceramic resonator oscillator. All the information given in this paragraph are based on design simulation results obtained with typical external components specified in *Table 39*. In the application, the resonator and the load capacitors have to be placed as close as possible to the oscillator pins in order to minimize output distortion and startup stabilization time. Refer to the crystal resonator manufacturer for more details on the resonator characteristics (frequency, package, accuracy).

Table 39. HSE oscillator characteristics(1)

Symbol	Parameter	Conditions(2)	Min	Typ	Max	Unit
f_{OSC_IN}	Oscillator frequency	-	4	8	48	MHz
R_F	Feedback resistor	-	-	200	-	kΩ

Table 39. HSE oscillator characteristics(1) (continued)

Symbol	Parameter	Conditions(2)	Min	Typ	Max	Unit
$I_{DD(HSE)}$	HSE current consumption	During startup(3)	-	-	5.5	mA
		V_{DD} = 3 V, Rm = 30 Ω, CL = 10 pF@8 MHz	-	0.58	-	
		V_{DD} = 3 V, Rm = 45 Ω, CL = 10 pF@8 MHz	-	0.59	-	
		V_{DD} = 3 V, Rm = 30 Ω, CL = 5 pF@48 MHz	-	0.89	-	
		V_{DD} = 3 V, Rm = 30 Ω, CL = 10 pF@48 MHz	-	1.14	-	
		V_{DD} = 3 V, Rm = 30 Ω, CL = 20 pF@48 MHz	-	1.94	-	
G_m	Maximum critical crystal transconductance	Startup	-	-	1.5	mA/V
$t_{SU(HSE)}$(4)	Startup time	V_{DD} is stabilized	-	2	-	ms

1. Specified by design. Not tested in production.
2. Resonator characteristics given by the crystal/ceramic resonator manufacturer.
3. This consumption level occurs during the first 2/3 of the $t_{SU(HSE)}$ startup time
4. $t_{SU(HSE)}$ is the startup time measured from the moment it is enabled (by software) to a stabilized 8 MHz oscillation is reached. This value is measured for a standard crystal resonator and it can vary significantly with the crystal manufacturer

For C_{L1} and C_{L2}, it is recommended to use high-quality external ceramic capacitors in the 5 pF to 20 pF range (typ.), designed for high-frequency applications, and selected to match the requirements of the crystal or resonator (see *Figure 18*). C_{L1} and C_{L2} are usually the same size. The crystal manufacturer typically specifies a load capacitance which is the series combination of C_{L1} and C_{L2}. PCB and MCU pin capacitance must be included (10 pF can be used as a rough estimate of the combined pin and board capacitance) when sizing C_{L1} and C_{L2}.

Note: For information on selecting the crystal, refer to the application note AN2867 "Oscillator design guide for ST microcontrollers" available from the ST website www.st.com.

Figure 18. Typical application with an 8 MHz crystal

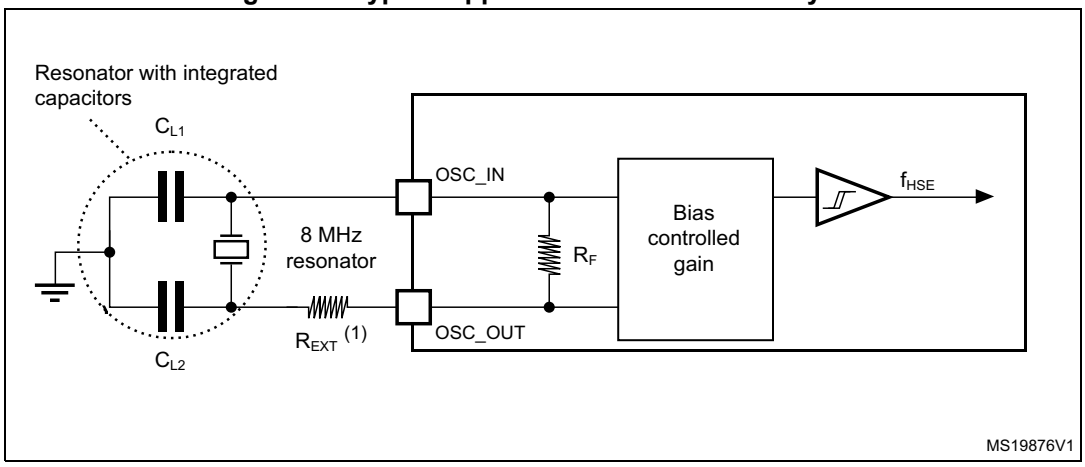

1. R_{EXT} value depends on the crystal characteristics.

Low-speed external clock generated from a crystal resonator

The low-speed external (LSE) clock can be supplied with a 32.768 kHz crystal resonator oscillator. All the information given in this paragraph are based on design simulation results obtained with typical external components specified in *Table 40*. In the application, the resonator and the load capacitors have to be placed as close as possible to the oscillator pins in order to minimize output distortion and startup stabilization time. Refer to the crystal resonator manufacturer for more details on the resonator characteristics (frequency, package, accuracy).

Table 40. LSE oscillator characteristics (f_{LSE} = 32.768 kHz)(1)

Symbol	Parameter	Conditions(2)	Min	Typ	Max	Unit
$I_{DD(LSE)}$	LSE current consumption	LSEDRV[1:0] = 00 Low drive capability	-	250	-	nA
		LSEDRV[1:0] = 01 Medium low drive capability	-	315	-	
		LSEDRV[1:0] = 10 Medium high drive capability	-	500	-	
		LSEDRV[1:0] = 11 High drive capability	-	630	-	
$Gm_{critmax}$	Maximum critical crystal gm	LSEDRV[1:0] = 00 Low drive capability	-	-	0.5	µA/V
		LSEDRV[1:0] = 01 Medium low drive capability	-	-	0.75	
		LSEDRV[1:0] = 10 Medium high drive capability	-	-	1.7	
		LSEDRV[1:0] = 11 High drive capability	-	-	2.7	
$t_{SU(LSE)}$(3)	Startup time	V_{DD} is stabilized	-	2	-	s

1. Specified by design. Not tested in production.
2. Refer to the note and caution paragraphs below the table, and to the application note AN2867 “Oscillator design guide for ST microcontrollers”.

3. $t_{SU(LSE)}$ is the startup time measured from the moment it is enabled (by software) to a stabilized 32.768 kHz oscillation is reached. This value is measured for a standard crystal and it can vary significantly with the crystal manufacturer

Note: For information on selecting the crystal, refer to the application note AN2867 "Oscillator design guide for ST microcontrollers" available from the ST website www.st.com.

Figure 19. Typical application with a 32.768 kHz crystal

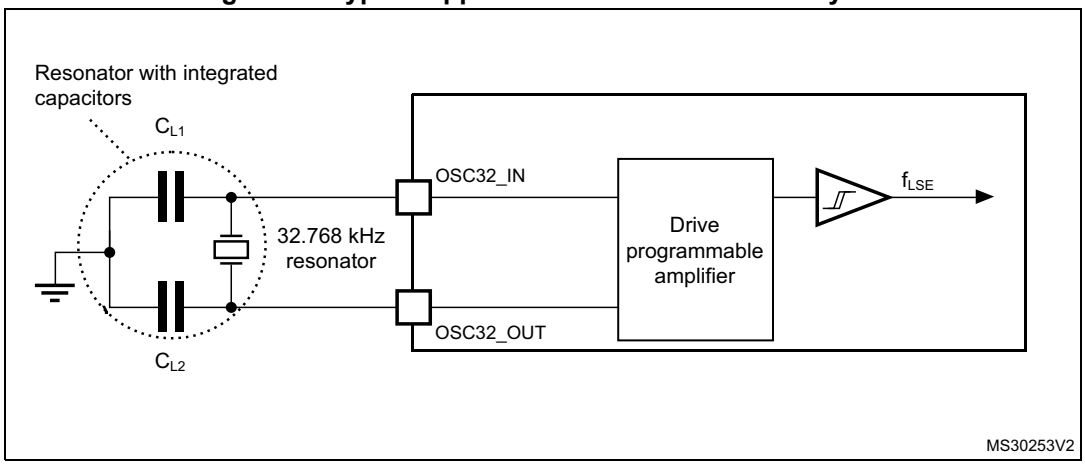

Note: An external resistor is not required between OSC32_IN and OSC32_OUT and it is forbidden to add one.

5.3.8 Internal clock source characteristics

The parameters given in *Table 41* are derived from tests performed under ambient temperature and supply voltage conditions summarized in *Table 21: General operating conditions*. The provided curves are characterization results, not tested in production.

High-speed internal (HSI16) RC oscillator

Table 41. HSI16 oscillator characteristics(1)

Symbol	Parameter	Conditions	Min	Typ	Max	Unit
f_{HSI16}	HSI16 Frequency	V_{DD}=3.0 V, T_A=30 °C	15.88	-	16.08	MHz
$\Delta_{Temp(HSI16)}$	HSI16 oscillator frequency drift over temperature	T_A= 0 to 85 °C	-1	-	1	%
		T_A= -40 to 125 °C	-2	-	1.5	%
$\Delta_{VDD(HSI16)}$	HSI16 oscillator frequency drift over V_{DD}	V_{DD}=1.62 V to 3.6 V	-0.1	-	0.05	%
TRIM	HSI16 frequency user trimming step	From code 127 to 128	-8	-6	-4	%
		From code 63 to 64 From code 191 to 192	-5.8	-3.8	-1.8	
		For all other code increments	0.2	0.3	0.4	
D_{HSI16}(2)	Duty Cycle	-	45	-	55	%
$t_{su(HSI16)}$(2)	HSI16 oscillator start-up time	-	-	0.8	1.2	µs

Table 41. HSI16 oscillator characteristics(1) (continued)

Symbol	Parameter	Conditions	Min	Typ	Max	Unit
$t_{stab(HSI16)}$(2)	HSI16 oscillator stabilization time	-	-	3	5	µs
$I_{DD(HSI16)}$(2)	HSI16 oscillator power consumption	-	-	155	190	µA

1. Based on characterization results, not tested in production.
2. Specified by design. Not tested in production.

Figure 20. HSI16 frequency vs. temperature

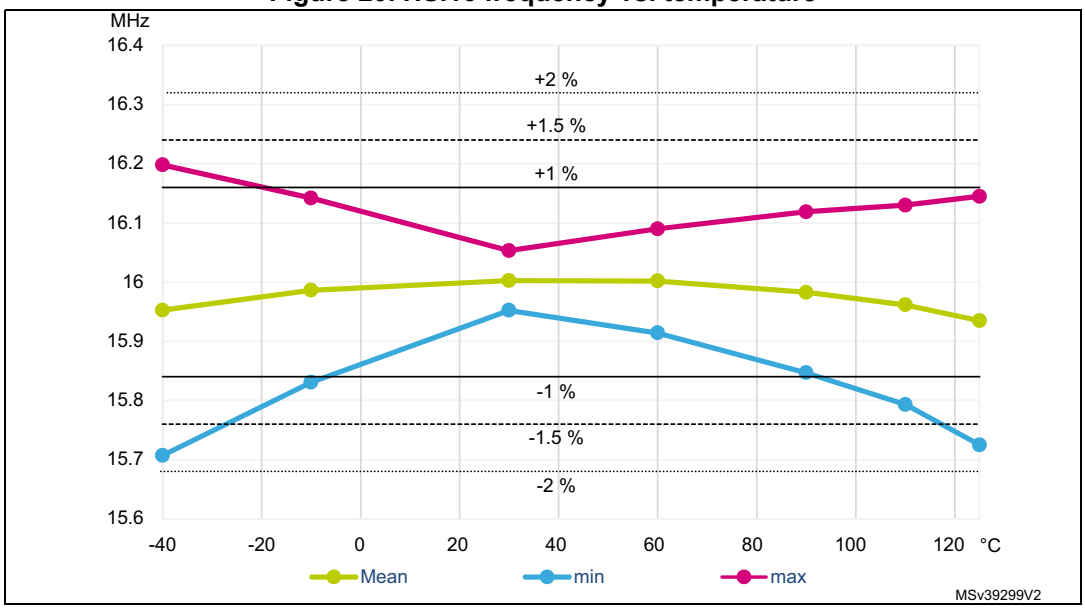

Low-speed internal (LSI) RC oscillator

Table 42. LSI oscillator characteristics(1)

Symbol	Parameter	Conditions	Min	Typ	Max	Unit
f_{LSI}	LSI frequency	V_{DD} = 3.0 V, T_A = 30 °C	31.04	-	32.96	kHz
		V_{DD} = 1.62 V to 3.6 V, T_A = -40 to 125 °C	29.5	-	34	
$t_{SU(LSI)}$(2)	LSI oscillator start-up time	-	-	80	130	µs
$t_{STAB(LSI)}$(2)	LSI oscillator stabilization time	5% of final frequency	-	125	180	µs
$I_{DD(LSI)}$(2)	LSI oscillator power consumption	-	-	110	180	nA

1. Based on characterization results, not tested in production.
2. Specified by design. Not tested in production.

5.3.9 PLL characteristics

The parameters given in *Table 43* are derived from tests performed under temperature and V_{DD} supply voltage conditions summarized in *Table 21: General operating conditions*.

Table 43. PLL characteristics(1)

Symbol	Parameter	Conditions	Min	Typ	Max	Unit
f_{PLL_IN}	PLL input clock frequency(2)	-	2.66	-	16	MHz
D_{PLL_IN}	PLL input clock duty cycle	-	45	-	55	%
$f_{PLL_P_OUT}$	PLL multiplier output clock P	Voltage scaling Range 1	3.09	-	122	MHz
		Voltage scaling Range 2	3.09	-	40	
$f_{PLL_Q_OUT}$	PLL multiplier output clock Q	Voltage scaling Range 1	12	-	128	MHz
		Voltage scaling Range 2	12	-	33	
$f_{PLL_R_OUT}$	PLL multiplier output clock R	Voltage scaling Range 1	12	-	64	MHz
		Voltage scaling Range 2	12	-	16	
f_{VCO_OUT}	PLL VCO output	Voltage scaling Range 1	96	-	344	MHz
		Voltage scaling Range 2	96	-	128	
t_{LOCK}	PLL lock time	-	-	15	40	µs
Jitter	RMS cycle-to-cycle jitter	System clock 56 MHz	-	50	-	±ps
	RMS period jitter		-	40	-	
$I_{DD(PLL)}$	PLL power consumption on V_{DD}(1)	VCO freq = 96 MHz	-	200	260	µA
		VCO freq = 192 MHz	-	300	380	
		VCO freq = 344 MHz	-	520	650	

1. Specified by design. Not tested in production.
2. Make sure to use the appropriate division factor M to obtain the specified PLL input clock values.

5.3.10 Flash memory characteristics

Table 44. Flash memory characteristics(1)

Symbol	Parameter	Conditions	Typ	Max	Unit
t_{prog}	64-bit programming time	-	85	125	µs
t_{prog_row}	Row (32 double word) programming time	Normal programming	2.7	4.6	ms
		Fast programming	1.7	2.8	
t_{prog_page}	Page (2 Kbyte) programming time	Normal programming	21.8	36.6	ms
		Fast programming	13.7	22.4	
t_{ERASE}	Page (2 Kbyte) erase time	-	22.0	40.0	ms
t_{prog_bank}	Bank (64 Kbyte(2)) programming time	Normal programming	0.7	1.2	s
		Fast programming	0.4	0.7	
t_{ME}	Mass erase time	-	22.1	40.1	ms

Table 44. Flash memory characteristics(1) (continued)

Symbol	Parameter	Conditions	Typ	Max	Unit
$I_{DD(FlashA)}$	Average consumption from V_{DD}	Programming	3	-	mA
		Page erase	3	-	
		Mass erase	5	-	
$I_{DD(FlashP)}$	Maximum current (peak)	Programming, 2 µs peak duration	7	-	mA
		Erase, 41 µs peak duration	7	-	

1. Specified by design. Not tested in production.
2. Values provided also apply to devices with less flash memory than one 64 Kbyte bank

Table 45. Flash memory endurance and data retention

Symbol	Parameter	Conditions	Min(1)	Unit
N_{END}	Endurance	T_A = -40 to +105 °C	10	kcycles
t_{RET}	Data retention	1 kcycle(2) at T_A = 85 °C	30	Years
		1 kcycle(2) at T_A = 105 °C	15	
		1 kcycle(2) at T_A = 125 °C	7	
		10 kcycles(2) at T_A = 55 °C	30	
		10 kcycles(2) at T_A = 85 °C	15	
		10 kcycles(2) at T_A = 105 °C	10	

1. Evaluated by characterization. Not tested in production.
2. Cycling performed over the whole temperature range.

5.3.11 EMC characteristics

Susceptibility tests are performed on a sample basis during device characterization.

Functional EMS (electromagnetic susceptibility)

While a simple application is executed on the device (toggling 2 LEDs through I/O ports). the device is stressed by two electromagnetic events until a failure occurs. The failure is indicated by the LEDs:

- **Electrostatic discharge (ESD)** (positive and negative) is applied to all device pins until a functional disturbance occurs. This test is compliant with the IEC 61000-4-2 standard.
- **FTB**: A Burst of Fast Transient voltage (positive and negative) is applied to V_{DD} and V_{SS} through a 100 pF capacitor, until a functional disturbance occurs. This test is compliant with the IEC 61000-4-4 standard.

A device reset allows normal operations to be resumed.

The test results are given in *Table 46*. They are based on the EMS levels and classes defined in application note AN1709.

Table 46. EMS characteristics

Symbol	Parameter	Conditions	Level/ Class
V_{FESD}	Voltage limits to be applied on any I/O pin to induce a functional disturbance	V_{DD} = 3.3 V, T_A = +25 °C, f_{HCLK} = 64 MHz, LQFP48, conforming to IEC 61000-4-2	2B
V_{EFTB}	Fast transient voltage burst limits to be applied through 100 pF on V_{DD} and V_{SS} pins to induce a functional disturbance	V_{DD} = 3.3 V, T_A = +25 °C, f_{HCLK} = 64 MHz, LQFP48, conforming to IEC 61000-4-4	5A

Designing hardened software to avoid noise problems

EMC characterization and optimization are performed at component level with a typical application environment and simplified MCU software. It should be noted that good EMC performance is highly dependent on the user application and the software in particular.

Therefore it is recommended that the user applies EMC software optimization and prequalification tests in relation with the EMC level requested for his application.

Software recommendations

The software flowchart must include the management of runaway conditions such as:

- corrupted program counter
- unexpected reset
- critical data corruption (for example control registers)

Prequalification trials

Most of the common failures (unexpected reset and program counter corruption) can be reproduced by manually forcing a low state on the NRST pin or the Oscillator pins for 1 second.

To complete these trials, ESD stress can be applied directly on the device, over the range of specification values. When unexpected behavior is detected, the software can be hardened to prevent unrecoverable errors occurring (see application note AN1015).

Electromagnetic Interference (EMI)

The electromagnetic field emitted by the device are monitored while a simple application is executed (toggling 2 LEDs through the I/O ports). This emission test is compliant with IEC 61967-2 standard which specifies the test board and the pin loading.

Table 47. EMI characteristics

Symbol	Parameter	Conditions	Monitored frequency band	Value	Unit
S_{EMI}	Peak(1)	f_{HSE} = 8 MHz f_{HCLK} = 64 MHz V_{DD} = 3.6 V, T_A = 25 °C, LQFP64 package compliant with IEC 61967-2	0.1 MHz to 30 MHz	-4	dBµV
			30 MHz to 130 MHz	1	
			130 MHz to 1 GHz	3	
			1 GHz to 2 GHz	8	
	Level(2)		0.1 MHz to 2 GHz	2.5	-

1. Refer to AN1709 “EMI radiated test” section.

2. Refer to AN1709 “EMI level classification” section

5.3.12 Electrical sensitivity characteristics

Based on three different tests (ESD, LU) using specific measurement methods, the device is stressed in order to determine its performance in terms of electrical sensitivity.

Electrostatic discharge (ESD)

Electrostatic discharges (a positive then a negative pulse separated by 1 second) are applied to the pins of each sample according to each pin combination. The sample size depends on the number of supply pins in the device (3 parts × (n+1) supply pins). This test conforms to the ANSI/JEDEC standard.

Table 48. ESD absolute maximum ratings

Symbol	Ratings	Conditions	Class	Maximum value(1)	Unit
$V_{ESD(HBM)}$	Electrostatic discharge voltage (human body model)	T_A = +25 °C, conforming to ANSI/ESDA/JEDEC JS-001	2	2000	V
$V_{ESD(CDM)}$	Electrostatic discharge voltage (charge device model)	T_A = +25 °C, conforming to ANSI/ESDA/JEDEC JS-002	C2a	500	V

1. Based on characterization results, not tested in production.

Static latch-up

Two complementary static tests are required on six parts to assess the latch-up performance:

- A supply overvoltage is applied to each power supply pin.
- A current is injected to each input, output and configurable I/O pin.

These tests are compliant with EIA/JESD 78A IC latch-up standard.

Table 49. Electrical sensitivity

Symbol	Parameter	Conditions	Class
LU	Static latch-up class	T_A = +125 °C conforming to JESD78	II Level A

5.3.13 I/O current injection characteristics

As a general rule, current injection to the I/O pins, due to external voltage below V_{SS} or above V_{DDIO1} (for standard, 3.3 V-capable I/O pins) should be avoided during normal product operation. However, in order to give an indication of the robustness of the microcontroller in cases when abnormal injection accidentally happens, susceptibility tests are performed on a sample basis during device characterization.

Functional susceptibility to I/O current injection

While a simple application is executed on the device, the device is stressed by injecting current into the I/O pins programmed in floating input mode. While current is injected into the I/O pin, one at a time, the device is checked for functional failures.

The failure is indicated by an out-of-range parameter: ADC error above a certain limit (higher than 5 LSB TUE), induced leakage current on adjacent pins out of conventional limits (-5 µA/+0 µA range) or other functional failure (for example reset occurrence or oscillator frequency deviation).

Negative induced leakage current is caused by negative injection and positive induced leakage current is caused by positive injection.

Table 50. I/O current injection susceptibility(1)

Symbol	Description		Functional susceptibility		Unit
			Negative injection	Positive injection	
I_{INJ}	Injected current on pin	All except PA1, PA3, PA5, PA6, PA13, PB0, PB1, PB2, and PB8	-5	N/A	mA
		PA1, PA5, PA13, PB1, PB2	0	+5 / N/A(2)	
		PA3, PA6, PB0	-5	+5 / N/A(2)	
		PB8	0	N/A	

1. Based on characterization results, not tested in production.
2. The injection current value is applicable when the switchable diode is activated, N/A when not activated.

5.3.14 I/O port characteristics

General input/output characteristics

Unless otherwise specified, the parameters given in *Table 51* are derived from tests performed under the conditions summarized in *Table 21: General operating conditions*. All I/Os are designed as CMOS- and TTL-compliant.

Note: For information on GPIO configuration, refer to the application note AN4899 "STM32 GPIO configuration for hardware settings and low-power consumption" available from the ST website www.st.com.

Table 51. I/O static characteristics

Symbol	Parameter	Conditions		Min	Typ	Max	Unit
V_{IL}(1)	I/O input low level voltage	All	1.62 V < V_{DDIO1} < 3.6 V	-	-	0.3 x V_{DDIO1} (2)	V
						0.39 x V_{DDIO1} - 0.06 (3)	
V_{IH}(1)	I/O input high level voltage	All	1.62 V < V_{DDIO1} < 3.6 V	0.7 x V_{DDIO1}(2)	-	-	V
				0.49 x V_{DDIO1} + 0.26(3)	-	-	
V_{hys}(3)	I/O input hysteresis	FT_xx, NRST	1.62 V < V_{DDIO1} < 3.6 V	-	200	-	mV
I_{lkg}	Input leakage current(3)	All except FT_e	0 < V_{IN} ≤ V_{DDIO1}	-	-	±70	nA
			V_{DDIO1} ≤ V_{IN} ≤ V_{DDIO1}+1 V	-	-	600(4)	
			V_{DDIO1} +1 V < V_{IN} ≤ 5.5 V(3)	-	-	150(4)	
		FT_e (5)	0 < V_{IN} ≤ V_{DDIO1}	-	-	5	µA
R_{PU}	Weak pull-up equivalent resistor (6)	V_{IN} = V_{SS}		25	40	55	kΩ
R_{PD}	Weak pull-down equivalent resistor(6)	V_{IN} = V_{DDIO1}		25	40	55	kΩ
C_{IO}	I/O pin capacitance	-		-	5	-	pF

1. Refer to *Figure 21: I/O input characteristics*.
2. Tested in production.
3. Guaranteed by design.
4. This value represents the pad leakage of the I/O itself. The total product pad leakage is provided by this formula: $I_{Total_Ileak_max}$ = 10 µA + [number of I/Os where V_{IN} is applied on the pad] x I_{lkg}(Max).
5. FT_e with diode enabled. Input leakage current of FT_e I/Os with the diode disabled is the same as standard I/Os.
6. Pull-up and pull-down resistors are designed with a true resistance in series with a switchable PMOS/NMOS. This PMOS/NMOS contribution to the series resistance is minimal (~10% order).

All I/Os are CMOS- and TTL-compliant (no software configuration required). Their characteristics cover more than the strict CMOS-technology or TTL parameters, as shown in *Figure 21*.

Figure 21. I/O input characteristics

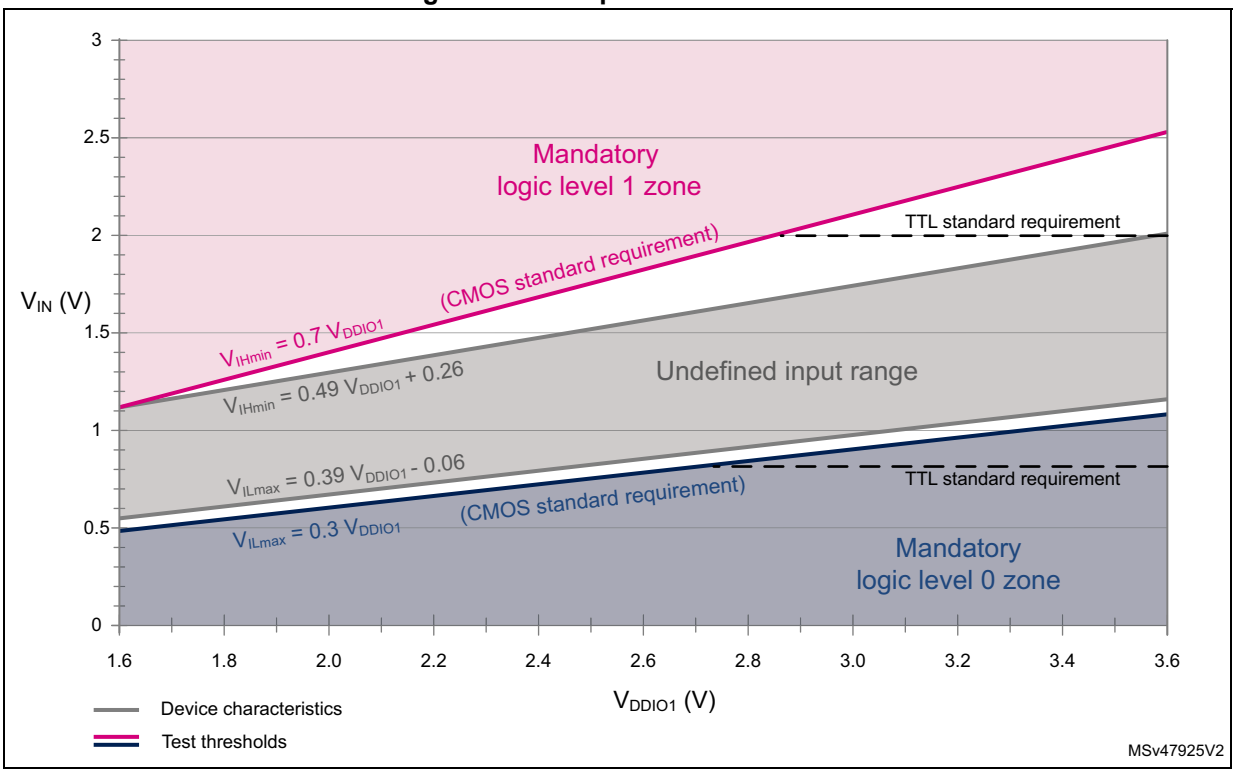

Characteristics of FT_e I/Os

The following table and figure specify input characteristics of FT_e I/Os.

Table 52. Input characteristics of FT_e I/Os

Symbol	Parameter	Conditions	Min	Typ	Max	Unit
I_{INJ}	Injected current on pin	-	-	-	5	mA
V_{DDIO1}-V_{IN}	Voltage over V_{DDIO1}	I_{INJ} = 5 mA	-	-	2	V
R_d	Diode dynamic serial resistor	I_{INJ} = 5 mA	-	-	300	Ω

Figure 22. Current injection into FT_e input with diode active

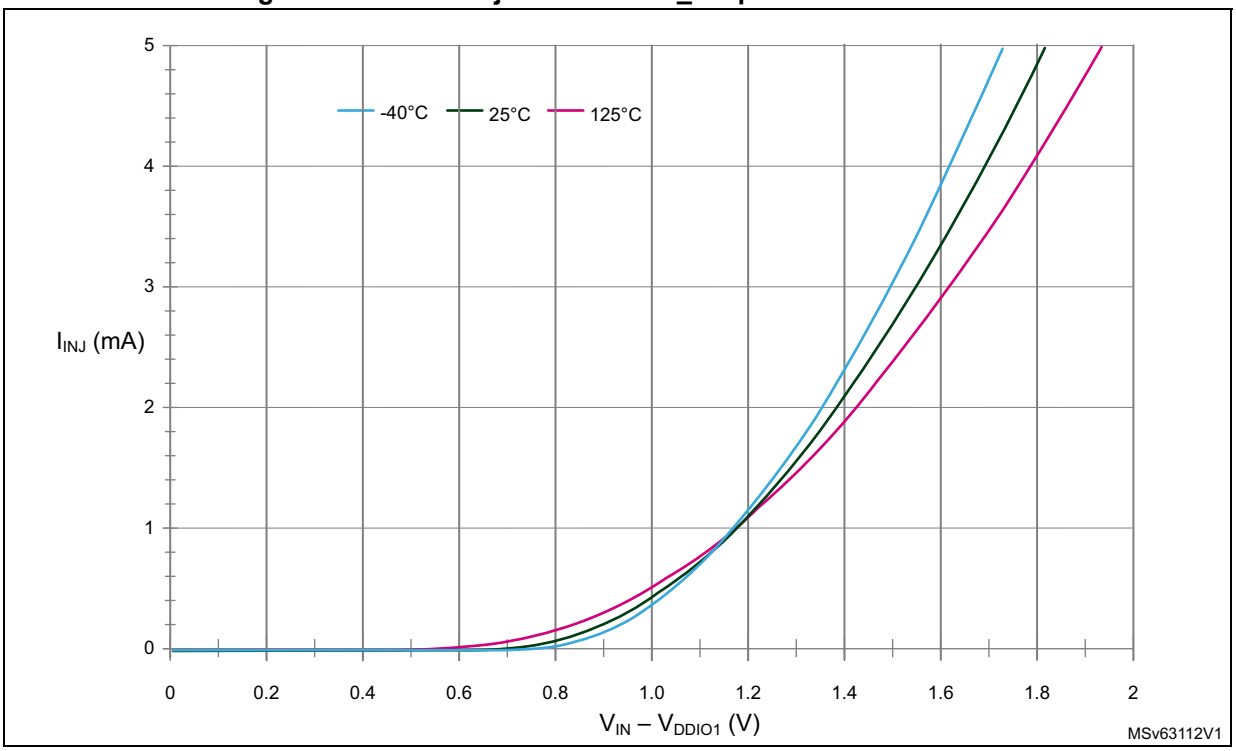

Output driving current

The GPIOs (general purpose input/outputs) can sink or source up to ±8 mA, and up to ±15 mA with relaxed V_{OL}/V_{OH}.

In the user application, the number of I/O pins which can drive current must be limited to respect the absolute maximum rating specified in *Section 5.2*:

- The sum of the currents sourced by all the I/Os on $V_{DDIO1,}$ plus the maximum consumption of the MCU sourced on $V_{DD,}$ cannot exceed the absolute maximum rating I_{VDD} (see *Table 18: Voltage characteristics*).
- The sum of the currents sunk by all the I/Os on V_{SS}, plus the maximum consumption of the MCU sunk on V_{SS}, cannot exceed the absolute maximum rating I_{VSS} (see *Table 18: Voltage characteristics*).

Output voltage levels

Unless otherwise specified, the parameters given in the table below are derived from tests performed under the ambient temperature and supply voltage conditions summarized in *Table 21: General operating conditions*. All I/Os are CMOS- and TTL-compliant (FT OR TT unless otherwise specified).

Table 53. Output voltage characteristics(1)(2)

Symbol	Parameter	Conditions	Min	Max	Unit
V_{OL}	Output low level voltage for an I/O pin	CMOS port(3) $\|I_{IO}\|$ 8 mA $V_{DDIO1} \geq 2.7$ V	-	0.4	V
V_{OH}	Output high level voltage for an I/O pin		V_{DDIO1} - 0.4	-	V
V_{OL}(4)	Output low level voltage for an I/O pin	TTL port(3) $\|I_{IO}\|$ = 8 mA $V_{DDIO1} \geq 2.7$ V	-	0.4	V
V_{OH}(4)	Output high level voltage for an I/O pin		2.4	-	V
V_{OL}(4)	Output low level voltage for an I/O pin	All I/Os $\|I_{IO}\|$ = 15 mA $V_{DDIO1} \geq 2.7$ V	-	1.3	V
V_{OH}(4)	Output high level voltage for an I/O pin		V_{DDIO1} - 1.3	-	V
V_{OL}(4)	Output low level voltage for an I/O pin	$\|I_{IO}\|$ = 3 mA $V_{DDIO1} \geq V_{DD}$(min)	-	0.4	V
V_{OH}(4)	Output high level voltage for an I/O pin		V_{DDIO1} - 0.45	-	V
V_{OLFM+}(4)	Output low level voltage for an FT I/O pin in FM+ mode (FT I/O with _f option)	$\|I_{IO}\|$ = 20 mA $V_{DDIO1} \geq 2.7$ V	-	0.4	V
		$\|I_{IO}\|$ = 9 mA $V_{DDIO1} \geq V_{DD}$(min)	-	0.4	

1. The I_{IO} current sourced or sunk by the device must always respect the absolute maximum rating specified in *Table 18: Voltage characteristics*, and the sum of the currents sourced or sunk by all the I/Os (I/O ports and control pins) must always respect the absolute maximum ratings ΣI_{IO}.
2. As PC13, PC14 and PC15 are supplied through the power switch, the sum of currents sourced by those I/Os must not exceed 3 mA.
3. TTL and CMOS outputs are compatible with JEDEC standards JESD36 and JESD52.
4. Specified by design. Not tested in production.

Output buffer timing characteristics

The definition and values of input/output AC characteristics are given in *Figure 23* and *Table 54*, respectively.

Unless otherwise specified, the parameters given are derived from tests performed under the ambient temperature and supply voltage conditions summarized in *Table 21: General operating conditions*.

Table 54. Non-FT_c I/O output timing characteristics(1)(2)

Speed	Symbol	Parameter	Conditions	Min	Max	Unit
00	f_{max}	Maximum frequency	C=50 pF, 2.7 V ≤ V_{DDIO1} ≤ 3.6 V	-	2	MHz
			C=50 pF, 1.6 V ≤ V_{DDIO1} ≤ 2.7 V	-	0.35	
			C=10 pF, 2.7 V ≤ V_{DDIO1} ≤ 3.6 V	-	3	
			C=10 pF, 1.6 V ≤ V_{DDIO1} ≤ 2.7 V	-	0.45	
	t_r/t_f	Output rise and fall time	C=50 pF, 2.7 V ≤ V_{DDIO1} ≤ 3.6 V	-	100	ns
			C=50 pF, 1.6 V ≤ V_{DDIO1} ≤ 2.7 V	-	225	
			C=10 pF, 2.7 V ≤ V_{DDIO1} ≤ 3.6 V	-	75	
			C=10 pF, 1.6 V ≤ V_{DDIO1} ≤ 2.7 V	-	150	

Table 54. Non-FT_c I/O output timing characteristics(1)(2) (continued)

Speed	Symbol	Parameter	Conditions	Min	Max	Unit
01	f_{max}	Maximum frequency	C=50 pF, 2.7 V ≤ V_{DDIO1} ≤ 3.6 V	-	10	MHz
			C=50 pF, 1.6 V ≤ V_{DDIO1} ≤ 2.7 V	-	2	
			C=10 pF, 2.7 V ≤ V_{DDIO1} ≤ 3.6 V	-	15	
			C=10 pF, 1.6 V ≤ V_{DDIO1} ≤ 2.7 V	-	2.5	
	t_r/t_f	Output rise and fall time	C=50 pF, 2.7 V ≤ V_{DDIO1} ≤ 3.6 V	-	30	ns
			C=50 pF, 1.6 V ≤ V_{DDIO1} ≤ 2.7 V	-	60	
			C=10 pF, 2.7 V ≤ V_{DDIO1} ≤ 3.6 V	-	15	
			C=10 pF, 1.6 V ≤ V_{DDIO1} ≤ 2.7 V	-	30	
10	f_{max}	Maximum frequency	C=50 pF, 2.7 V ≤ V_{DDIO1} ≤ 3.6 V	-	30	MHz
			C=50 pF, 1.6 V ≤ V_{DDIO1} ≤ 2.7 V	-	15	
			C=10 pF, 2.7 V ≤ V_{DDIO1} ≤ 3.6 V	-	60	
			C=10 pF, 1.6 V ≤ V_{DDIO1} ≤ 2.7 V	-	30	
	t_r/t_f	Output rise and fall time	C=50 pF, 2.7 V ≤ V_{DDIO1} ≤ 3.6 V	-	11	ns
			C=50 pF, 1.6 V ≤ V_{DDIO1} ≤ 2.7 V	-	22	
			C=10 pF, 2.7 V ≤ V_{DDIO1} ≤ 3.6 V	-	4	
			C=10 pF, 1.6 V ≤ V_{DDIO1} ≤ 2.7 V	-	8	
11	f_{max}	Maximum frequency	C=30 pF, 2.7 V ≤ V_{DDIO1} ≤ 3.6 V	-	60	MHz
			C=30 pF, 1.6 V ≤ V_{DDIO1} ≤ 2.7 V	-	30	
			C=10 pF, 2.7 V ≤ V_{DDIO1} ≤ 3.6 V	-	80(3)	
			C=10 pF, 1.6 V ≤ V_{DDIO1} ≤ 2.7 V	-	40	
	t_r/t_f	Output rise and fall time	C=30 pF, 2.7 V ≤ V_{DDIO1} ≤ 3.6 V	-	5.5	ns
			C=30 pF, 1.6 V ≤ V_{DDIO1} ≤ 2.7 V	-	11	
			C=10 pF, 2.7 V ≤ V_{DDIO1} ≤ 3.6 V	-	2.5	
			C=10 pF, 1.6 V ≤ V_{DDIO1} ≤ 2.7 V	-	5	
Fm+	f_{max}	Maximum frequency	C=50 pF, 1.6 V ≤ V_{DDIO1} ≤ 3.6 V	-	1	MHz
	t_f	Output fall time(4)		-	5	ns

1. The I/O speed is configured with the OSPEEDRy[1:0] bitfield. The FM+ mode is configured through the SYSCFG_CFGR1 register. Refer to the reference manual RM0444 for the description of the GPIO port configuration.
2. Specified by design. Not tested in production.
3. This value represents the I/O capability but the maximum system frequency is limited to 64 MHz.
4. The fall time is defined between 70% and 30% of the output waveform, according to I^2C specification.

Table 55. FT_c I/O output timing characteristics(1)(2)

Speed	Symbol	Parameter	Conditions	Min	Max	Unit
0	f_{max}	Maximum frequency	C=50 pF, 2.7 V ≤ V_{DDIO1} ≤ 3.6 V	-	2	MHz
			C=50 pF, 1.6 V ≤ V_{DDIO1} ≤ 2.7 V	-	1	
	t_r/t_f	Output rise and fall time	C=50 pF, 2.7 V ≤ V_{DDIO1} ≤ 3.6 V	-	170	ns
			C=50 pF, 1.6 V ≤ V_{DDIO1} ≤ 2.7 V	-	330	

Table 55. FT_c I/O output timing characteristics(1)(2) (continued)

Speed	Symbol	Parameter	Conditions	Min	Max	Unit
1	f_{max}	Maximum frequency	C=50 pF, 2.7 V ≤ V_{DDIO1} ≤ 3.6 V	-	10	MHz
			C=50 pF, 1.6 V ≤ V_{DDIO1} ≤ 2.7 V	-	5	
	t_r/t_f	Output rise and fall time	C=50 pF, 2.7 V ≤ V_{DDIO1} ≤ 3.6 V	-	35	ns
			C=50 pF, 1.6 V ≤ V_{DDIO1} ≤ 2.7 V	-	65	

1. The I/O speed is configured using the OSPEEDRy[0] bit. Refer to the reference manual RM0444 for description of the GPIO port configuration.
2. Specified by design. Not tested in production.

Figure 23. I/O AC characteristics definition

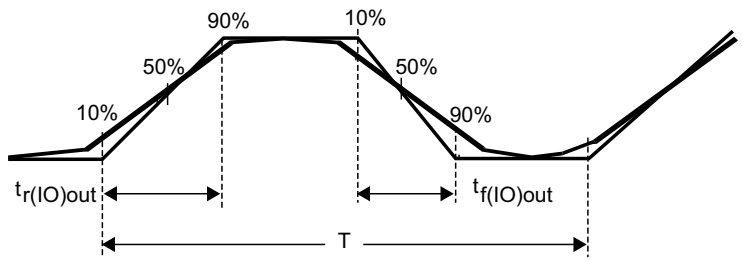

Maximum frequency is achieved with a duty cycle at (45 - 55%) when loaded by the specified capacitance.

MS32132V4

5.3.15 NRST input characteristics

The NRST input driver uses CMOS technology. It is connected to a permanent pull-up resistor, R_{PU}.

Unless otherwise specified, the parameters given in the following table are derived from tests performed under the ambient temperature and supply voltage conditions summarized in *Table 21: General operating conditions*.

Table 56. NRST pin characteristics(1)

Symbol	Parameter	Conditions	Min	Typ	Max	Unit
$V_{IL(NRST)}$	NRST input low level voltage	-	-	-	0.3 x V_{DDIO1}	V
$V_{IH(NRST)}$	NRST input high level voltage	-	0.7 x V_{DDIO1}	-	-	V
$V_{hys(NRST)}$	NRST Schmitt trigger voltage hysteresis	-	-	200	-	mV
R_{PU}	Weak pull-up equivalent resistor(2)	V_{IN} = V_{SS}	25	40	55	kΩ

Table 56. NRST pin characteristics(1) (continued)

Symbol	Parameter	Conditions	Min	Typ	Max	Unit
$V_{F(NRST)}$	NRST input filtered pulse	-	-	-	70	ns
$V_{NF(NRST)}$	NRST input not filtered pulse	1.7 V ≤ V_{DD} ≤ 3.6 V	350	-	-	ns

1. Specified by design. Not tested in production.
2. The pull-up is designed with a true resistance in series with a switchable PMOS. This PMOS contribution to the series resistance is minimal (~10% order).

Figure 24. Recommended NRST pin protection

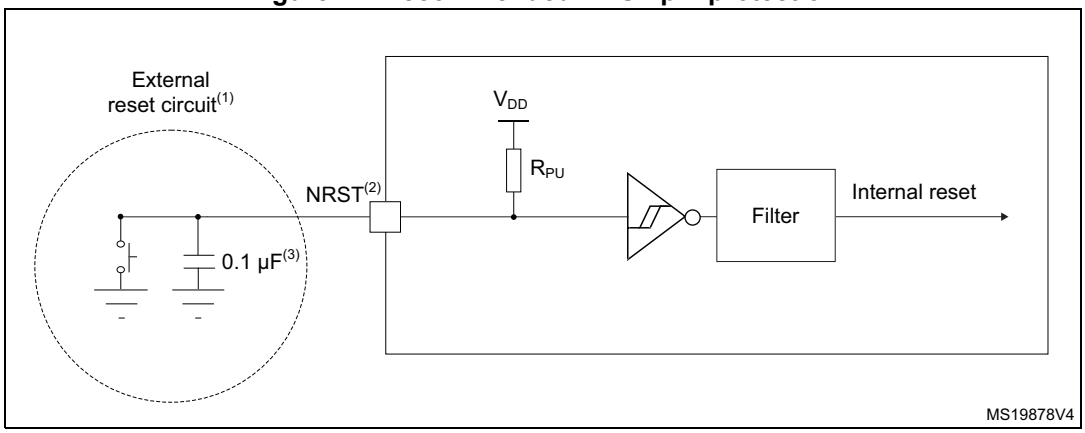

1. The reset network protects the device against parasitic resets.
2. The user must ensure that, upon power-on, the level on the NRST pin can exceed the minimum $V_{IH(NRST)}$ level. Otherwise, the device does not exit the power-on reset. This applies to any PF2-NRST configuration set, the GPIO mode inclusive.
3. The external capacitor on NRST must be placed as close as possible to the device.

5.3.16 Extended interrupt and event controller input (EXTI) characteristics

The pulse on the interrupt input must equal or exceed the minimum length, to guarantee that it is detected by the event controller.

Table 57. EXTI input characteristics(1)

Symbol	Parameter	Min	Typ	Max	Unit
PLEC	Pulse length to event controller	20	-	-	ns

1. Specified by design. Not tested in production.

5.3.17 Analog switch booster

Table 58. Analog switch booster characteristics(1)

Symbol	Parameter	Min	Typ	Max	Unit
V_{DD}	Supply voltage	1.62 V	-	3.6	V
$t_{SU(BOOST)}$	Booster startup time	-	-	240	µs

Table 58. Analog switch booster characteristics(1) (continued)

Symbol	Parameter	Min	Typ	Max	Unit
$I_{DD(BOOST)}$	Booster consumption for 1.62 V ≤ V_{DD} ≤ 2.0 V	-	-	250	µA
	Booster consumption for 2.0 V ≤ V_{DD} ≤ 2.7 V	-	-	500	
	Booster consumption for 2.7 V ≤ V_{DD} ≤ 3.6 V	-	-	900	

1. Specified by design. Not tested in production.

5.3.18 Analog-to-digital converter characteristics

Unless otherwise specified, the parameters given in *Table 59* are preliminary values derived from tests performed under ambient temperature, f_{PCLK} frequency and V_{DDA} supply voltage conditions summarized in *Table 21: General operating conditions*.

Note: It is recommended to perform a calibration after each power-up.

Table 59. ADC characteristics(1)

Symbol	Parameter	Conditions(2)	Min	Typ	Max	Unit
V_{DDA}	Analog supply voltage	-	1.62	-	3.6	V
V_{REF+}	Positive reference voltage	V_{DDA} ≥ 2 V	2	-	V_{DDA}	V
		V_{DDA} < 2 V	V_{DDA}			
f_{ADC}	ADC clock frequency	Range 1	0.14	-	35	MHz
		Range 2	0.14	-	16	
D_{ADC}(3)	ADC analog clock duty cycle	-	45	-	55	%
f_s	Sampling rate	12 bits	-	-	2.50	MSps
		10 bits	-	-	2.92	
		8 bits	-	-	3.50	
		6 bits	-	-	4.38	
f_{TRIG}	External trigger frequency	f_{ADC} = 35 MHz; 12 bits	-	-	2.33	MHz
		12 bits	-	-	f_{ADC}/15	
V_{AIN} (4)	Conversion voltage range	-	V_{SSA}	-	V_{REF+}	V
R_{AIN}	External input impedance	-	-	-	50	kΩ
C_{ADC}	Internal sample and hold capacitor	-	-	5	-	pF
t_{STAB}	ADC power-up time	-	2			Conversion cycle
t_{CAL}	Calibration time	f_{ADC} = 35 MHz	2.35			µs
		-	82			1/f_{ADC}

Table 59. ADC characteristics[1] (continued)

Symbol	Parameter	Conditions[2]	Min	Typ	Max	Unit
$W_{LATENCY}$	ADC_DR register write latency	CKMODE[1:0] = 00	1.5 f_{ADC} + 2 f_{PCLK} cycles	-	1.5 f_{ADC} + 3 f_{PCLK} cycles	-
		CKMODE[1:0] = 01	-	4.5	-	$1/f_{PCLK}$
		CKMODE[1:0] = 10	-	8.5	-	
		CKMODE[1:0] = 11	-	2.5	-	
t_{LATR}	Trigger conversion latency	CKMODE[1:0] = 00	2	-	3	$1/f_{ADC}$
		CKMODE[1:0] = 01	6.5			$1/f_{PCLK}$
		CKMODE[1:0] = 10	12.5			
		CKMODE[1:0] = 11	3.5			
t_s	Sampling time	f_{ADC} = 35 MHz; V_{DDA} > 2V	0.043	-	4.59	µs
			1.5	-	160.5	$1/f_{ADC}$
		f_{ADC} = 35 MHz; V_{DDA} < 2V	0.1	-	4.59	µs
			3.5		160.5	$1/f_{ADC}$
$t_{ADCVREG_STUP}$	ADC voltage regulator start-up time	-	-	-	20	µs
t_{CONV}	Total conversion time (including sampling time)	f_{ADC} = 35 MHz Resolution = 12 bits	0.40	-	4.95	µs
		Resolution = 12 bits	t_s + 12.5 cycles for successive approximation = 14 to 173			$1/f_{ADC}$
t_{IDLE}	Laps of time allowed between two conversions without rearm	-	-	-	100	µs
$I_{DDA(ADC)}$	ADC consumption from V_{DDA}	f_s = 2.5 MSps	-	410	-	µA
		f_s = 1 MSps	-	164	-	
		f_s = 10 kSps	-	17	-	
$I_{DDV(ADC)}$	ADC consumption from V_{REF+}	f_s = 2.5 MSps	-	65	-	µA
		f_s = 1 MSps	-	26	-	
		f_s = 10 kSps	-	0.26	-	

1. Specified by design. Not tested in production.
2. I/O analog switch voltage booster must be enabled (BOOSTEN = 1 in the SYSCFG_CFGR1) when V_{DDA} < 2.4 V and disabled when V_{DDA} ≥ 2.4 V.
3. This requirement is granted when the incoming clock (PCLK or ADC asynchronous clock) is divided by two or more in the ADC. For other cases, refer to the reference manual section *ADC clock* for information on how to fulfill this requirement.
4. V_{REF+} is internally connected to V_{DDA} on some packages.Refer to *Section 4: Pinouts, pin description and alternate functions* for further details.

Table 60. Maximum ADC R_{AIN}

Resolution	Sampling cycle at 35 MHz	Sampling time at 35 MHz [ns]	Max. R_{AIN}(1)(2) (Ω)
12 bits	1.5(3)	43	50
	3.5	100	680
	7.5	214	2200
	12.5	357	4700
	19.5	557	8200
	39.5	1129	15000
	79.5	2271	33000
	160.5	4586	50000
10 bits	1.5(3)	43	68
	3.5	100	820
	7.5	214	3300
	12.5	357	5600
	19.5	557	10000
	39.5	1129	22000
	79.5	2271	39000
	160.5	4586	50000
8 bits	1.5(3)	43	82
	3.5	100	1500
	7.5	214	3900
	12.5	357	6800
	19.5	557	12000
	39.5	1129	27000
	79.5	2271	50000
	160.5	4586	50000
6 bits	1.5(3)	43	390
	3.5	100	2200
	7.5	214	5600
	12.5	357	10000
	19.5	557	15000
	39.5	1129	33000
	79.5	2271	50000
	160.5	4586	50000

1. Specified by design. Not tested in production.
2. I/O analog switch voltage booster must be enabled (BOOSTEN = 1 in the SYSCFG_CFGR1) when V_{DDA} < 2.4 V and disabled when V_{DDA} ≥ 2.4 V.

3. Only allowed with V_{DDA} > 2 V

Table 61. ADC accuracy(1)(2)(3)

Symbol	Parameter	Conditions(4)	Min	Typ	Max	Unit
ET	Total unadjusted error	$V_{DDA} = V_{REF+} = 3$ V; $f_{ADC} = 35$ MHz; $f_s \leq 2.5$ MSps; $T_A = 25$ °C	-	±3	±4	LSB
		2 V < V_{DDA}=V_{REF+} < 3.6 V; $f_{ADC} = 35$ MHz; $f_s \leq 2.5$ MSps; T_A = entire range	-	±3	±6.5	
		1.65 V < V_{DDA}=V_{REF+} < 3.6 V; T_A = entire range Range 1: $f_{ADC} = 35$ MHz; $f_s \leq 2.2$ MSps; Range 2: $f_{ADC} = 16$ MHz; $f_s \leq 1.1$ MSps;	-	±3	±7.5	
EO	Offset error	$V_{DDA} = V_{REF+} = 3$ V; $f_{ADC} = 35$ MHz; $f_s \leq 2.5$ MSps; $T_A = 25$ °C	-	±1.5	±2	LSB
		2 V < $V_{DDA} = V_{REF+}$ < 3.6 V; $f_{ADC} = 35$ MHz; $f_s \leq 2.5$ MSps; T_A = entire range	-	±1.5	±4.5	
		1.65 V < V_{DDA}=V_{REF+} < 3.6 V; T_A = entire range Range 1: $f_{ADC} = 35$ MHz; $f_s \leq 2.2$ MSps; Range 2: $f_{ADC} = 16$ MHz; $f_s \leq 1.1$ MSps;	-	±1.5	±5.5	
EG	Gain error	$V_{DDA} = V_{REF+} = 3$ V; $f_{ADC} = 35$ MHz; $f_s \leq 2.5$ MSps; $T_A = 25$ °C	-	±3	±3.5	LSB
		2 V < $V_{DDA} = V_{REF+}$ < 3.6 V; $f_{ADC} = 35$ MHz; $f_s \leq 2.5$ MSps; T_A = entire range	-	±3	±5	
		1.65 V < $V_{DDA} = V_{REF+}$ < 3.6 V; T_A = entire range Range 1: $f_{ADC} = 35$ MHz; $f_s \leq 2.2$ MSps; Range 2: $f_{ADC} = 16$ MHz; $f_s \leq 1.1$ MSps;	-	±3	±6.5	
ED	Differential linearity error	$V_{DDA} = V_{REF+} = 3$ V; $f_{ADC} = 35$ MHz; $f_s \leq 2.5$ MSps; $T_A = 25$ °C	-	±1.2	±1.5	LSB
		2 V < $V_{DDA} = V_{REF+}$ < 3.6 V; $f_{ADC} = 35$ MHz; $f_s \leq 2.5$ MSps; T_A = entire range	-	±1.2	±1.5	
		1.65 V < $V_{DDA} = V_{REF+}$ < 3.6 V; T_A = entire range Range 1: $f_{ADC} = 35$ MHz; $f_s \leq 2.2$ MSps; Range 2: $f_{ADC} = 16$ MHz; $f_s \leq 1.1$ MSps;	-	±1.2	±1.5	

Table 61. ADC accuracy(1)(2)(3) (continued)

Symbol	Parameter	Conditions(4)	Min	Typ	Max	Unit
EL	Integral linearity error	$V_{DDA} = V_{REF+} = 3$ V; $f_{ADC} = 35$ MHz; $f_s \leq 2.5$ MSps; $T_A = 25$ °C	-	±2.5	±3	LSB
		$2 \text{ V} < V_{DDA} = V_{REF+} < 3.6$ V; $f_{ADC} = 35$ MHz; $f_s \leq 2.5$ MSps; T_A = entire range	-	±2.5	±3	
		$1.65 \text{ V} < V_{DDA} = V_{REF+} < 3.6$ V; T_A = entire range Range 1: $f_{ADC} = 35$ MHz; $f_s \leq 2.2$ MSps; Range 2: $f_{ADC} = 16$ MHz; $f_s \leq 1.1$ MSps;	-	±2.5	±3.5	
ENOB	Effective number of bits	$V_{DDA} = V_{REF+} = 3$ V; $f_{ADC} = 35$ MHz; $f_s \leq 2.5$ MSps; $T_A = 25$ °C	10.1	10.2	-	bit
		$2 \text{ V} < V_{DDA} = V_{REF+} < 3.6$ V; $f_{ADC} = 35$ MHz; $f_s \leq 2.5$ MSps; T_A = entire range	9.6	10.2	-	
		$1.65 \text{ V} < V_{DDA} = V_{REF+} < 3.6$ V; T_A = entire range Range 1: $f_{ADC} = 35$ MHz; $f_s \leq 2.2$ MSps; Range 2: $f_{ADC} = 16$ MHz; $f_s \leq 1.1$ MSps;	9.5	10.2	-	
SINAD	Signal-to-noise and distortion ratio	$V_{DDA} = V_{REF+} = 3$ V; $f_{ADC} = 35$ MHz; $f_s \leq 2.5$ MSps; $T_A = 25$ °C	62.5	63	-	dB
		$2 \text{ V} < V_{DDA} = V_{REF+} < 3.6$ V; $f_{ADC} = 35$ MHz; $f_s \leq 2.5$ MSps; T_A = entire range	59.5	63	-	
		$1.65 \text{ V} < V_{DDA} = V_{REF+} < 3.6$ V; T_A = entire range Range 1: $f_{ADC} = 35$ MHz; $f_s \leq 2.2$ MSps; Range 2: $f_{ADC} = 16$ MHz; $f_s \leq 1.1$ MSps;	59	63	-	
SNR	Signal-to-noise ratio	$V_{DDA} = V_{REF+} = 3$ V; $f_{ADC} = 35$ MHz; $f_s \leq 2.5$ MSps; $T_A = 25$ °C	63	64	-	dB
		$2 \text{ V} < V_{DDA} = V_{REF+} < 3.6$ V; $f_{ADC} = 35$ MHz; $f_s \leq 2.5$ MSps; T_A = entire range	60	64	-	
		$1.65 \text{ V} < V_{DDA} = V_{REF+} < 3.6$ V; T_A = entire range Range 1: $f_{ADC} = 35$ MHz; $f_s \leq 2.2$ MSps; Range 2: $f_{ADC} = 16$ MHz; $f_s \leq 1.1$ MSps;	60	64	-	

Table 61. ADC accuracy(1)(2)(3) (continued)

Symbol	Parameter	Conditions(4)	Min	Typ	Max	Unit
THD	Total harmonic distortion	$V_{DDA} = V_{REF+} = 3$ V; $f_{ADC} = 35$ MHz; $f_s \leq 2.5$ MSps; $T_A = 25$ °C	-	-74	-73	dB
		2 V < $V_{DDA} = V_{REF+}$ < 3.6 V; $f_{ADC} = 35$ MHz; $f_s \leq 2.5$ MSps; T_A = entire range	-	-74	-70	
		1.65 V < $V_{DDA} = V_{REF+}$ < 3.6 V; T_A = entire range Range 1: $f_{ADC} = 35$ MHz; $f_s \leq 2.2$ MSps; Range 2: $f_{ADC} = 16$ MHz; $f_s \leq 1.1$ MSps;	-	-74	-70	

1. Based on characterization results, not tested in production.
2. ADC DC accuracy values are measured after internal calibration.
3. Injecting negative current on any analog input pin significantly reduces the accuracy of A-to-D conversion of signal on another analog input. It is recommended to add a Schottky diode (pin to ground) to analog pins susceptible to receive negative current.
4. I/O analog switch voltage booster enabled (BOOSTEN = 1 in the SYSCFG_CFGR1) when V_{DDA} < 2.4 V and disabled when $V_{DDA} \geq 2.4$ V.

Figure 25. ADC accuracy characteristics

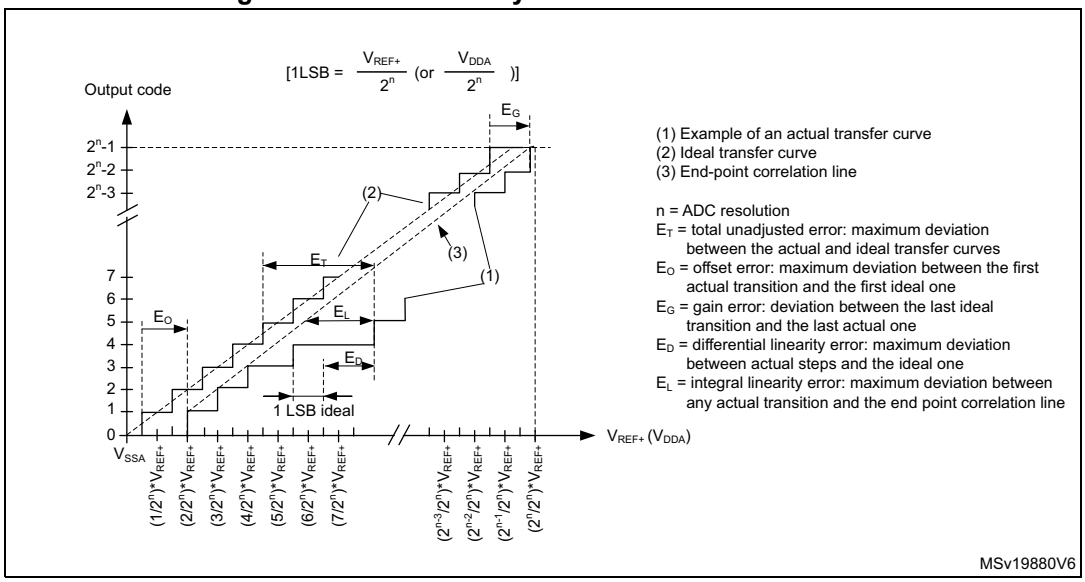

Figure 26. ADC typical connection diagram

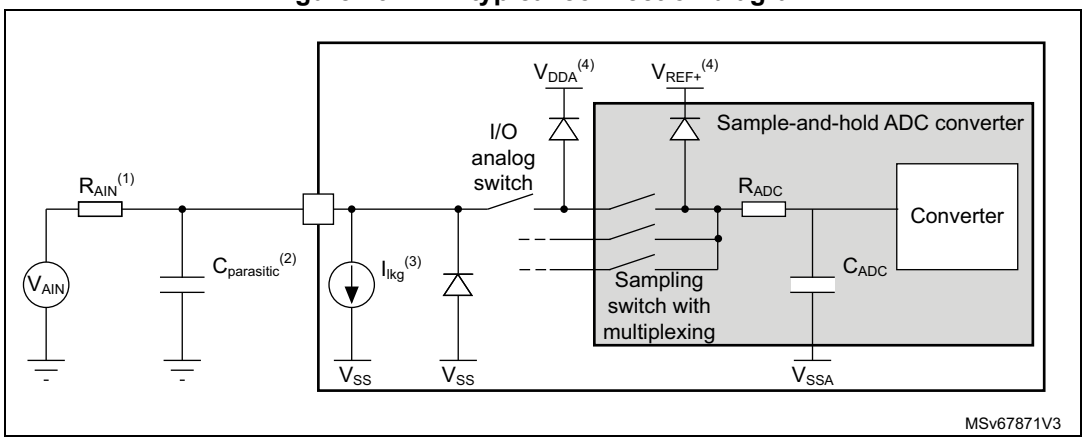

1. Refer to *Table 59: ADC characteristics* for the values of R_{AIN} and C_{ADC}.
2. $C_{parasitic}$ represents the capacitance of the PCB (dependent on soldering and PCB layout quality) plus the pad capacitance (refer to *Table 51: I/O static characteristics* for the value of the pad capacitance). A high $C_{parasitic}$ value downgrades conversion accuracy. To remedy this, f_{ADC} should be reduced.
3. Refer to *Table 51: I/O static characteristics* for the values of I_{lkg}.
4. Refer to *Figure 13: Power supply scheme*.

General PCB design guidelines

Power supply decoupling should be performed as shown in *Figure 13: Power supply scheme*. The 100 nF capacitor should be ceramic (good quality) and it should be placed as close as possible to the chip.

5.3.19 Voltage reference buffer characteristics

Table 62. VREFBUF characteristics(1)

Symbol	Parameter	Conditions		Min	Typ	Max	Unit
V_{DDA}	VREFBUF operating voltage	VRS = 0		2.4	-	3.6	V
		VRS = 1		2.8	-	3.6	
V_{REFBUF_OUT}	Voltage reference output	I_{load} = 100 µA T = 30 °C	VRS = 0	2.038(2)	2.042	2.046	V
			VRS = 1	2.497(2)	2.5	2.503	
TRIM	Trim step resolution	-		-	±0.05	±0.1	%
CL	Load capacitor	-		0.5	1	1.5	µF
esr	Equivalent Serial Resistor of C_{load}	-		-	-	2	Ω
I_{load}	Static load current	-		-	-	4	mA
I_{line_reg}	Line regulation	2.8 V ≤ V_{DDA} ≤ 3.6 V	I_{load} = 500 µA	-	200	1000	ppm/V
			I_{load} = 4 mA	-	100	500	
I_{load_reg}	Load regulation	500 µA ≤ I_{load} ≤4 mA	Normal mode	-	50	500	ppm/mA
$T_{Coeff_vrefbuf}$	Temperature coefficient of VREFBUF(3)	-40 °C < T_J < +125 °C		-	-	50	ppm/ °C
PSRR	Power supply rejection	DC		40	60	-	dB
		100 kHz		25	40	-	
t_{START}	Start-up time	CL = 0.5 µF(4)		-	300	350	µs
		CL = 1.1 µF(4)		-	500	650	
		CL = 1.5 µF(4)		-	650	800	
I_{INRUSH}	Control of maximum DC current drive on VREFBUF_OUT during start-up phase (5)	-		-	8	-	mA
$I_{DDA(VREFBUF)}$	VREFBUF consumption from V_{DDA}	I_{load} = 0 µA		-	16	25	µA
		I_{load} = 500 µA		-	18	30	
		I_{load} = 4 mA		-	35	50	

1. Specified by design. Not tested in production.
2. If the V_{DDA} is below the VREFBUF operating voltage, the voltage reference buffer can not maintain accurately the output voltage and it could drop down to V_{DDA} - 150mV.
3. The temperature coefficient at VREF+ output is the sum of $T_{Coeff_vrefint}$ and $T_{Coeff_vrefbuf}$.
4. The capacitive load must include a 100 nF capacitor in order to cut-off the high frequency noise.

5. To correctly control the VREFBUF inrush current during start-up phase and scaling change, the V_{DDA} voltage should be in the range [2.4 V to 3.6 V] and [2.8 V to 3.6 V] respectively for VRS = 0 and VRS = 1.

5.3.20 Temperature sensor characteristics

Table 63. TS characteristics

Symbol	Parameter	Min	Typ	Max	Unit
T_L(1)	V_{TS} linearity with temperature	-	±1	±2	°C
Avg_Slope(2)	Average slope	2.3	2.5	2.7	mV/°C
V_{30}	Voltage at 30°C (±5 °C)(3)	0.742	0.76	0.785	V
$t_{START(TS_BUF)}$(1)	Sensor Buffer Start-up time in continuous mode(4)	-	8	15	µs
t_{START}(1)	Start-up time when entering in continuous mode(4)	-	70	120	µs
t_{S_temp}(1)	ADC sampling time when reading the temperature	5	-	-	µs
$I_{DD(TS)}$(1)	Temperature sensor consumption from V_{DD}, when selected by ADC	-	4.7	7	µA

1. Specified by design. Not tested in production.
2. Based on characterization results, not tested in production.
3. Measured at V_{DDA} = 3.0 V ±10 mV. The V_{30} ADC conversion result is stored in the TS_CAL1 byte.
4. Continuous mode means Run/Sleep modes, or temperature sensor enable in Low-power run/Low-power sleep modes.

5.3.21 V_{BAT} monitoring characteristics

Table 64. V_{BAT} monitoring characteristics

Symbol	Parameter	Min	Typ	Max	Unit
R	Resistor bridge for V_{BAT}	-	39	-	kΩ
Q	Ratio on V_{BAT} measurement	-	3	-	-
Er(1)	Error on Q	-10	-	10	%
t_{S_vbat}(1)	ADC sampling time when reading the VBAT	12	-	-	µs

1. Specified by design. Not tested in production.

Table 65. V_{BAT} charging characteristics

Symbol	Parameter	Conditions	Min	Typ	Max	Unit
R_{BC}	Battery charging resistor	VBRS = 0	-	5	-	kΩ
		VBRS = 1	-	1.5	-	

5.3.22 Timer characteristics

The parameters given in the following tables are specified by design and not tested in production. Refer to *Section 5.3.14: I/O port characteristics* for details on the input/output

alternate function characteristics (output compare, input capture, external clock, PWM output).

Table 66. TIMx(1) characteristics

Symbol	Parameter	Conditions	Min	Max	Unit
$t_{res(TIM)}$	Timer resolution time	-	1	-	$t_{TIMxCLK}$
		$f_{TIMxCLK}$ = 64 MHz	15.625	-	ns
f_{EXT}	Timer external clock frequency on CH1 to CH4	-	0	$f_{TIMxCLK}/2$	MHz
		$f_{TIMxCLK}$ = 64 MHz	0	40	
Res_{TIM}	Timer resolution	TIMx (except TIM2)	-	16	bit
		TIM2	-	32	
$t_{COUNTER}$	16-bit counter clock period	-	1	65536	$t_{TIMxCLK}$
		$f_{TIMxCLK}$ = 64 MHz	0.015625	1024	µs
t_{MAX_COUNT}	Maximum possible count with 32-bit counter	-	-	65536 × 65536	$t_{TIMxCLK}$
		$f_{TIMxCLK}$ = 64 MHz	-	67.10	s

1. TIMx is used as a general term to refer to a timer (for example, TIM1).

Table 67. IWDG min/max timeout period at 32 kHz LSI clock(1)

Prescaler divider	PR[2:0] bits	Min timeout RL[11:0]= 0x000	Max timeout RL[11:0]= 0xFFF	Unit
/4	0	0.125	512	ms
/8	1	0.250	1024	
/16	2	0.500	2048	
/32	3	1.0	4096	
/64	4	2.0	8192	
/128	5	4.0	16384	
/256	6 or 7	8.0	32768	

1. The exact timings further depend on the phase of the APB interface clock versus the LSI clock, which causes an uncertainty of one RC period.

5.3.23 Characteristics of communication interfaces

I²C-bus interface characteristics

The I²C-bus interface meets timing requirements of the I²C-bus specification and user manual rev. 03 for:

- Standard-mode (Sm): with a bit rate up to 100 kbit/s
- Fast-mode (Fm): with a bit rate up to 400 kbit/s
- Fast-mode Plus (Fm+): with a bit rate up to 1 Mbit/s.

The timings are ensured by design as long as the I2C peripheral is properly configured (refer to the reference manual RM0444) and when the I2CCLK frequency is greater than the minimum shown in the following table.

Table 68. Minimum I2CCLK frequency

Symbol	Parameter	Condition		Typ	Unit
$f_{I2CCLK(min)}$	Minimum I2CCLK frequency for correct operation of I2C peripheral	Standard-mode		2	MHz
		Fast-mode	Analog filter enabled	9	
			DNF = 0		
			Analog filter disabled	9	
			DNF = 1		
		Fast-mode Plus	Analog filter enabled	18	
			DNF = 0		
			Analog filter disabled	16	
			DNF = 1		

The SDA and SCL I/O requirements are met with the following restrictions: the SDA and SCL I/O pins are not “true” open-drain. When configured as open-drain, the PMOS connected between the I/O pin and V_{DDIO1} is disabled, but is still present. Only FT_f I/O pins support Fm+ low-level output current maximum requirement. Refer to *Section 5.3.14: I/O port characteristics* for the I2C I/Os characteristics.

All I2C SDA and SCL I/Os embed an analog filter. Refer to the following table for its characteristics:

Table 69. I2C analog filter characteristics(1)

Symbol	Parameter	Min	Max	Unit
t_{AF}	Limiting duration of spikes suppressed by the filter(2)	50	260	ns

1. Based on characterization results, not tested in production.
2. Spikes shorter than the limiting duration are suppressed.

SPI/I²S characteristics

Unless otherwise specified, the parameters given in *Table 70* for SPI are derived from tests performed under the ambient temperature, f_{PCLKx} frequency and supply voltage conditions summarized in *Table 21: General operating conditions*. The additional general conditions are:

- OSPEEDRy[1:0] set to 11 (output speed)
- capacitive load C = 30 pF
- measurement points at CMOS levels: 0.5 x V_{DD}

Refer to *Section 5.3.14: I/O port characteristics* for more details on the input/output alternate function characteristics (NSS, SCK, MOSI, MISO for SPI).

Table 70. SPI characteristics(1)

Symbol	Parameter	Conditions	Min	Typ	Max	Unit
f_{SCK} $1/t_{c(SCK)}$	SPI clock frequency	Master mode 1.65 < V_{DD} < 3.6 V Range 1	-	-	32	MHz
		Master transmitter 1.65 < V_{DD} < 3.6 V Range 1			32	
		Slave receiver 1.65 < V_{DD} < 3.6 V Range 1			32	
		Slave transmitter/full duplex 2.7 < V_{DD} < 3.6 V Range 1			32	
		Slave transmitter/full duplex 1.65 < V_{DD} < 3.6 V Range 1			25	
		1.65 < V_{DD} < 3.6 V Range 2			8	
$t_{su(NSS)}$	NSS setup time	Slave mode, SPI prescaler = 2	4 x T_{PCLK}	-	-	ns
$t_{h(NSS)}$	NSS hold time	Slave mode, SPI prescaler = 2	2 x T_{PCLK}	-	-	ns
$t_{w(SCKH)}$	SCK high time	Master mode	T_{PCLK} - 1.5	T_{PCLK}	T_{PCLK} + 1	ns
$t_{w(SCKL)}$	SCK low time	Master mode	T_{PCLK} - 1.5	T_{PCLK}	T_{PCLK} + 1	ns
$t_{su(MI)}$	Master data input setup time	-	1	-	-	ns
$t_{su(SI)}$	Slave data input setup time	-	3	-	-	ns
$t_{h(MI)}$	Master data input hold time	-	5	-	-	ns
$t_{h(SI)}$	Slave data input hold time	-	2	-	-	ns
$t_{a(SO)}$	Data output access time	Slave mode	9	-	34	ns
$t_{dis(SO)}$	Data output disable time	Slave mode	9	-	16	ns
$t_{v(SO)}$	Slave data output valid time	2.7 < V_{DD} < 3.6 V Range 1	-	9	12	ns
		1.65 < V_{DD} < 3.6 V Range 1	-	9	19.5	
		1.65 < V_{DD} < 3.6 V Voltage Range 2	-	11	24	
$t_{v(MO)}$	Master data output valid time	-	-	3	5	ns

Table 70. SPI characteristics(1) (continued)

Symbol	Parameter	Conditions	Min	Typ	Max	Unit
$t_{h(SO)}$	Slave data output hold time	-	5	-	-	ns
$t_{h(MO)}$	Master data output hold time	-	1	-	-	ns

1. Based on characterization results, not tested in production.

Figure 27. SPI timing diagram - slave mode and CPHA = 0

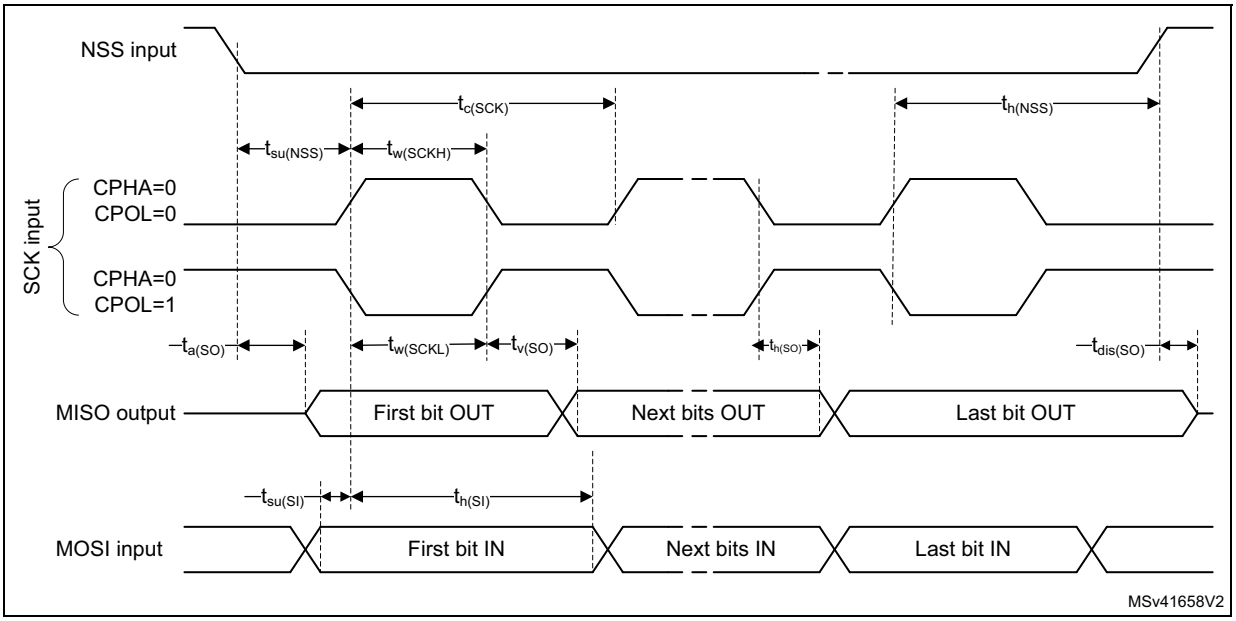

Figure 28. SPI timing diagram - slave mode and CPHA = 1

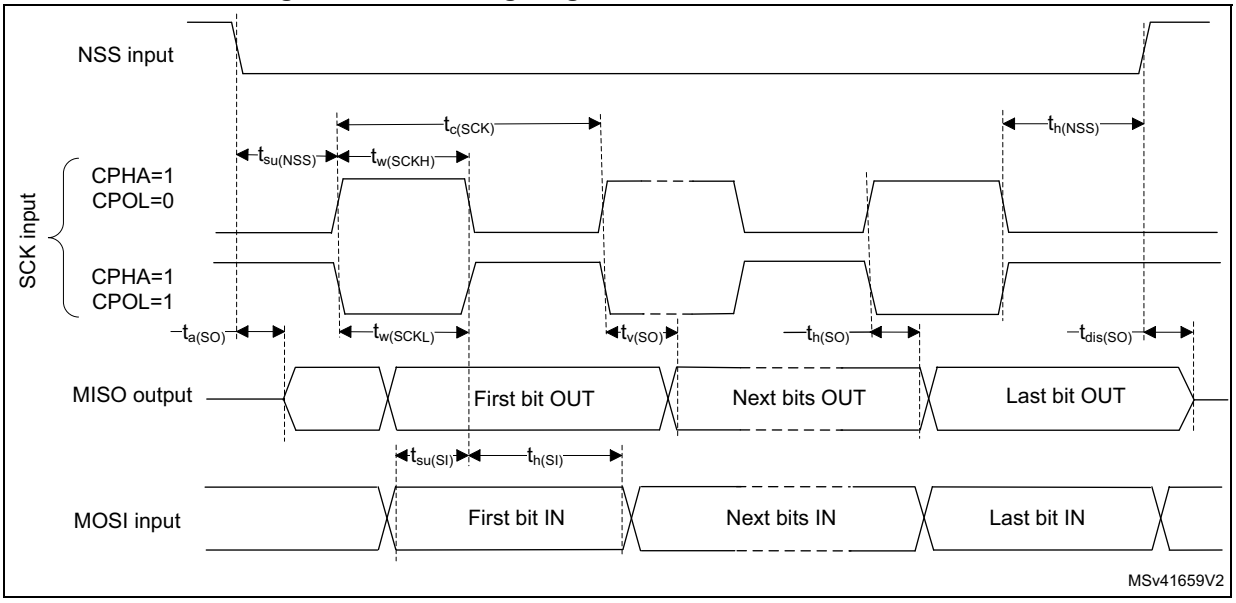

Figure 29. SPI timing diagram - master mode

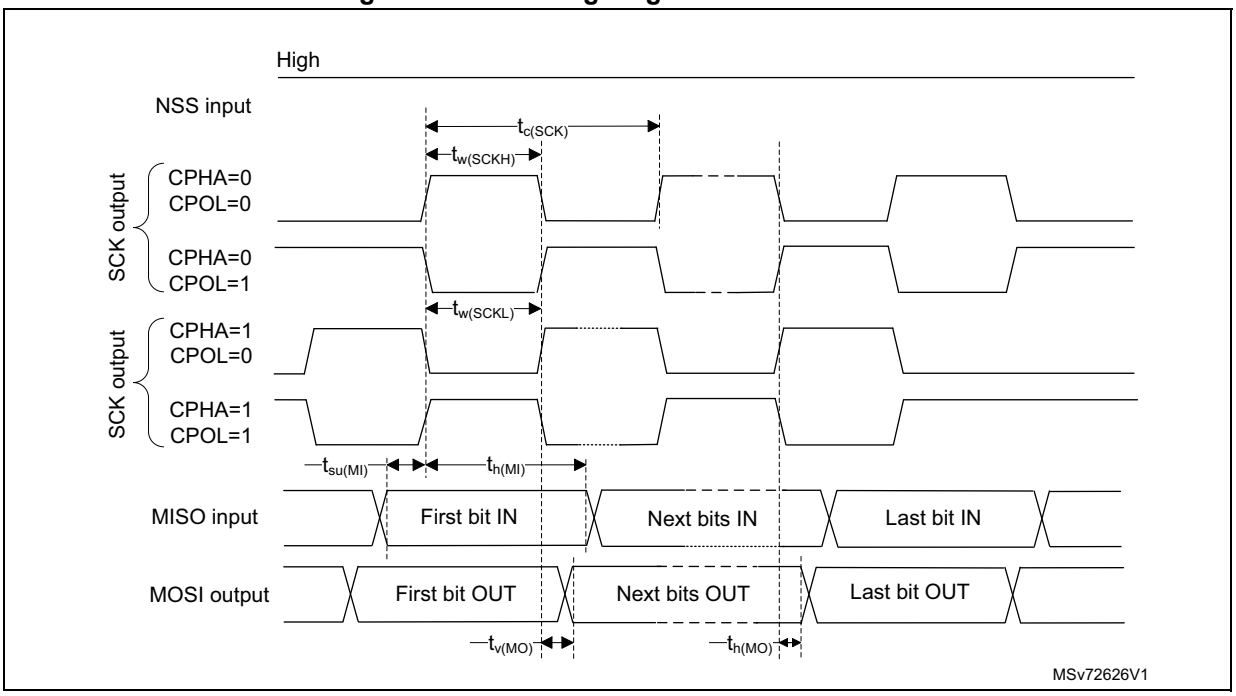

Table 71. I²S characteristics(1)

Symbol	Parameter	Conditions	Min	Max	Unit
f_{MCK}	I2S main clock output	f_{MCK}= 256 x Fs; (Fs = audio sampling frequency) Fs_{min} = 8 kHz; Fs_{max} = 192 kHz;	2.048	49.152	MHz
f_{CK}	I2S clock frequency	Master data	-	64xFs	MHz
		Slave data	-	64xFs	
D_{CK}	I2S clock frequency duty cycle	Slave receiver	30	70	%
$t_{v(WS)}$	WS valid time	Master mode	-	6	ns
$t_{h(WS)}$	WS hold time	Master mode	3	-	ns
$t_{su(WS)}$	WS setup time	Slave mode	3	-	ns
$t_{h(WS)}$	WS hold time	Slave mode	2	-	ns
$t_{su(SD_MR)}$	Data input setup time	Master receiver	4	-	ns
$t_{su(SD_SR)}$		Slave receiver	5	-	ns
$t_{h(SD_MR)}$	Data input hold time	Master receiver	4.5	-	ns
$t_{h(SD_SR)}$		Slave receiver	2	-	ns
$t_{v(SD_ST)}$	Data output valid time - slave transmitter	after enable edge; 2.7 < V_{DD} < 3.6V	-	10	ns
		after enable edge; 1.65 < V_{DD} < 3.6V		15	
$t_{v(SD_MT)}$	Data output valid time - master transmitter	after enable edge	-	5.5	ns

Table 71. I²S characteristics(1) (continued)

Symbol	Parameter	Conditions	Min	Max	Unit
$t_{h(SD_ST)}$	Data output hold time - slave transmitter	after enable edge	7	-	ns
$t_{h(SD_MT)}$	Data output hold time - master transmitter	after enable edge	1	-	ns

1. Based on characterization results, not tested in production.

Figure 30. I²S slave timing diagram (Philips protocol)

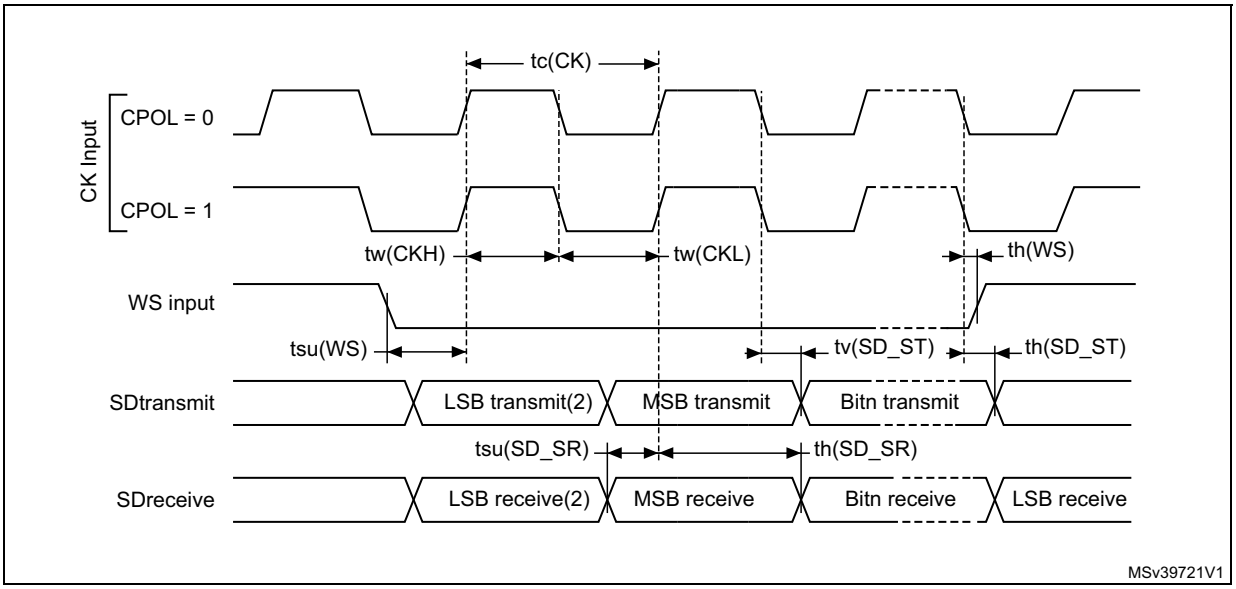

1. Measurement points are done at CMOS levels: 0.3 V_{DDIO1} and 0.7 V_{DDIO1}.
2. LSB transmit/receive of the previously transmitted byte. No LSB transmit/receive is sent before the first byte.

Figure 31. I²S master timing diagram (Philips protocol)

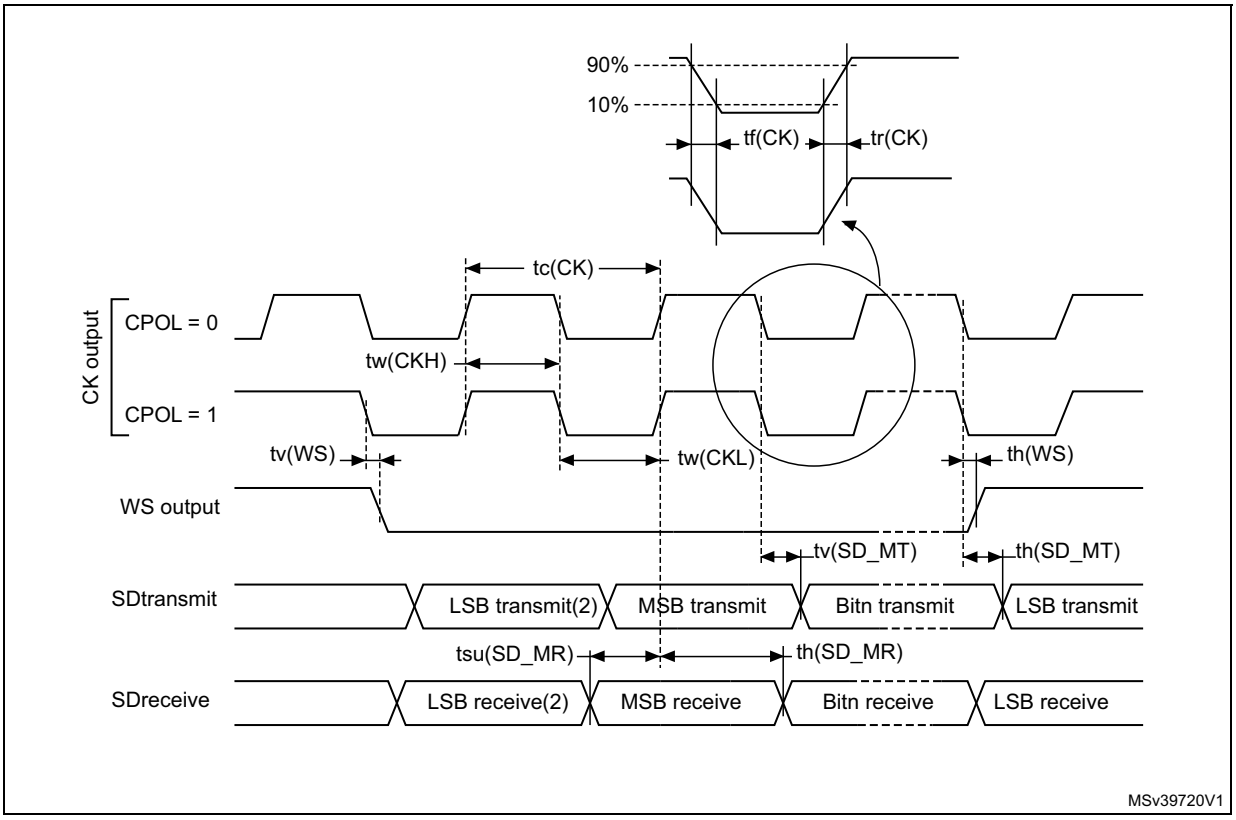

1. Based on characterization results, not tested in production.
2. LSB transmit/receive of the previously transmitted byte. No LSB transmit/receive is sent before the first byte.

USART (SPI mode) characteristics

Unless otherwise specified, the parameters given in *Table 72* for USART are derived from tests performed under the ambient temperature, f_{PCLKx} frequency and supply voltage conditions summarized in *Table 21: General operating conditions*. The additional general conditions are:

- OSPEEDRy[1:0] set to 10 (output speed)
- capacitive load C = 30 pF
- measurement points at CMOS levels: 0.5 x V_{DD}

Refer to *Section 5.3.14: I/O port characteristics* for more details on the input/output alternate function characteristics (NSS, CK, TX, and RX for USART).

Table 72. USART characteristics in SPI mode

Symbol	Parameter	Conditions	Min	Typ	Max	Unit
f_{CK}	USART clock frequency	Master mode	-	-	8	MHz
		Slave mode	-	-	21	
$t_{su(NSS)}$	NSS setup time	Slave mode	T_{ker}(1) + 2	-	-	ns
$t_{h(NSS)}$	NSS hold time	Slave mode	2	-	-	ns

Table 72. USART characteristics in SPI mode

Symbol	Parameter	Conditions	Min	Typ	Max	Unit
$t_{w(CKH)}$	CK high time	Master mode	$1 / f_{CK} / 2 - 1$	$1 / f_{CK} / 2$	$1 / f_{CK} / 2 + 1$	ns
$t_{w(CKL)}$	CK low time					ns
$t_{su(RX)}$	Data input setup time	Master mode	T_{ker}(1) + 2	-	-	ns
		Slave mode	3	-	-	ns
$t_{h(RX)}$	Data input hold time	Master mode	2	-	-	ns
		Slave mode	1	-	-	ns
$t_{v(TX)}$	Data output valid time	Master mode	-	1	2	ns
		Slave mode	-	10	19	ns
$t_{h(TX)}$	Data output hold time	Master mode	0	-	-	ns
		Slave mode	7	-	-	ns

1. T_{ker} is the *usart_ker_ck_pres* clock period

Figure 32. USART timing diagram in SPI master mode

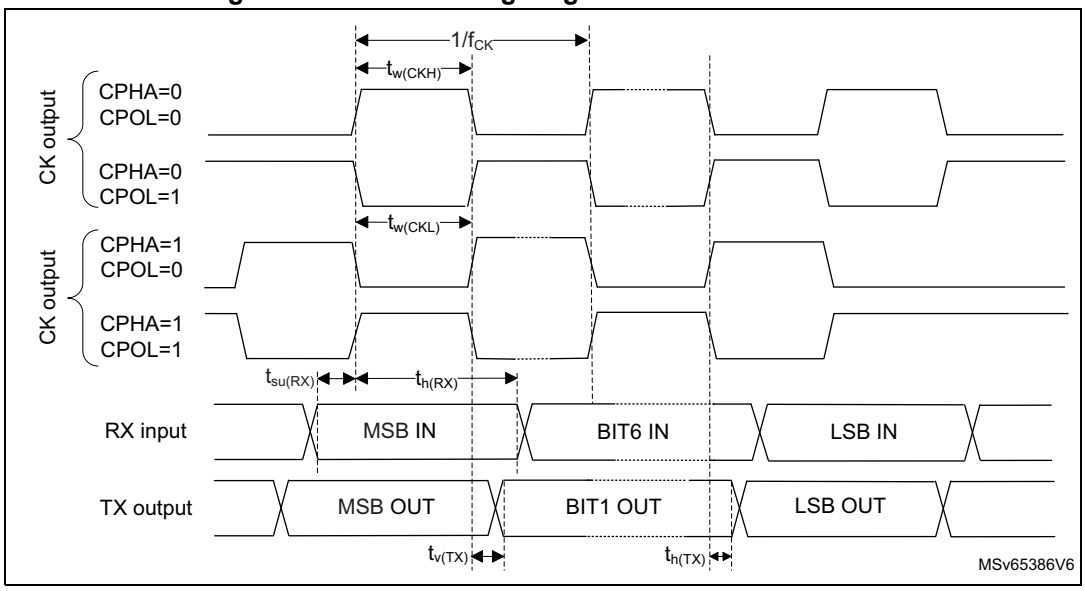

Figure 33. USART timing diagram in SPI slave mode

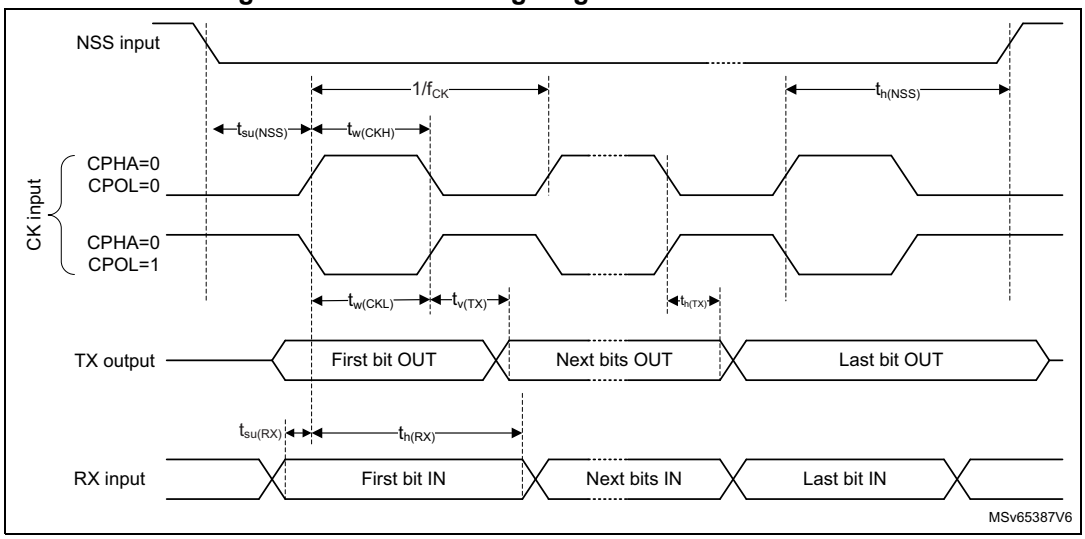

6 Package information

In order to meet environmental requirements, ST offers these devices in different grades of ECOPACK packages, depending on their level of environmental compliance. ECOPACK specifications, grade definitions and product status are available at: *www.st.com*. ECOPACK is an ST trademark.

6.1 Device marking

Refer to technical note “Reference device marking schematics for STM32 microcontrollers and microprocessors” (TN1433) available on *www.st.com*, for the location of pin 1 / ball A1 as well as the location and orientation of the marking areas versus pin 1 / ball A1.

Parts marked as “ES”, “E” or accompanied by an engineering sample notification letter, are not yet qualified and therefore not approved for use in production. ST is not responsible for any consequences resulting from such use. In no event will ST be liable for the customer using any of these engineering samples in production. ST’s Quality department must be contacted prior to any decision to use these engineering samples to run a qualification activity.

A WLCSP simplified marking example (if any) is provided in the corresponding package information subsection.

6.2 SO8N package information (O7)

This SO8N is an 8-lead, 4.9 x 6 mm, plastic small outline, 150 mils body width, package.

Figure 34. SO8N -Outline

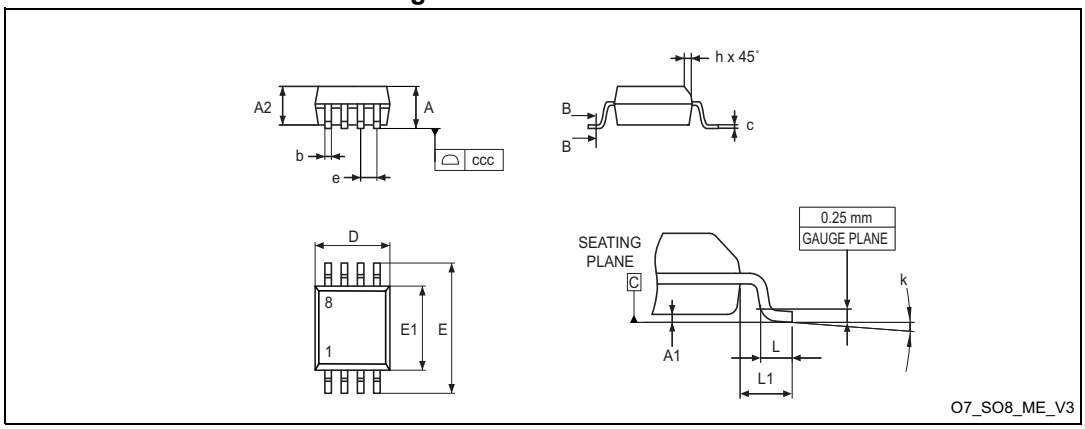

1. Drawing is not to scale.

Table 73. SO8N -Mechanical data

Symbol	millimeters			inches(1)		
	Min.	Typ.	Max.	Min.	Typ.	Max.
A	-	-	1.750	-	-	0.0689
A1	0.100	-	0.250	0.0039	-	0.0098

Table 73. SO8N -Mechanical data (continued)

Symbol	millimeters			inches[1]		
	Min.	Typ.	Max.	Min.	Typ.	Max.
A2	1.250	-	-	0.0492	-	-
b	0.280	-	0.480	0.0110	-	0.0189
c	0.100	-	0.230	0.0039	-	0.0091
D[2]	4.800	4.900	5.000	0.1890	0.1929	0.1969
E	5.800	6.000	6.200	0.2283	0.2362	0.2441
E1[3]	3.800	3.900	4.000	0.1496	0.1535	0.1575
e	-	1.270	-	-	0.0500	-
h	0.250	-	0.500	0.0098	-	0.0197
k	0°	-	8°	0°	-	8°
L	0.400	-	1.270	0.0157	-	0.0500
L1	-	1.040	-	-	0.0409	-
ccc	-	-	0.100	-	-	0.0039

1. Values in inches are converted from mm and rounded to four decimal digits.
2. Dimension “D” does not include mold flash, protrusions or gate burrs.
   Mold flash, protrusions or gate burrs shall not exceed 0.15mm per side
3. Dimension “E1” does not include interlead flash or protrusions.
   Interlead flash or protrusions shall not exceed 0.25 mm per side.

Note: The package top may be smaller than the package bottom. Dimensions D and E1 are determinated at the outermost extremes of the plastic body exclusive of mold flash, tie bar burrs, gate burrs and interleads flash, but including any mismatch between the top and bottom of plastic body. Measurement side for mold flash, protusions or gate burrs is bottom side.

Figure 35. SO8N - Footprint example

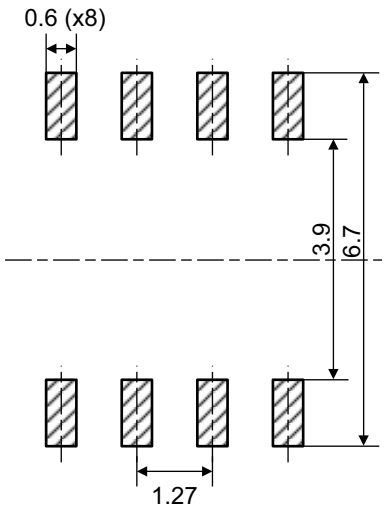

1. Dimensions are expressed in millimeters.

6.3 WLCSP18 package information (B06E)

This WLCSP is a 18 ball, 1.86 x 2.14 mm, 0.4 mm pitch, wafer level chip scale package.

Figure 36. WLCSP18 - Outline

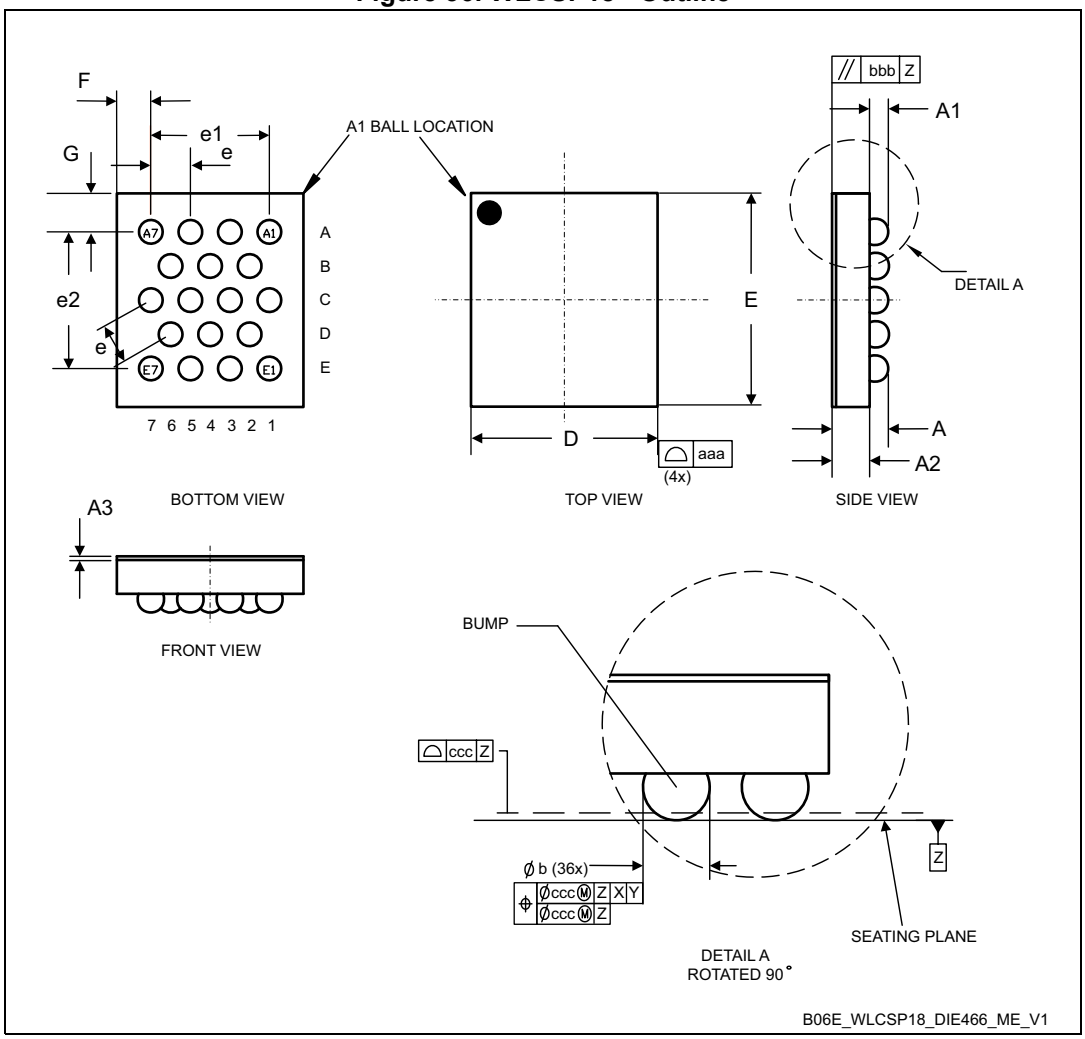

1. Drawing is not to scale.
2. Dimension is measured at the maximum bump diameter parallel to primary datum Z.
3. Primary datum Z and seating plane are defined by the spherical crowns of the bump.
4. Bump position designation per JESD 95-1, SPP-010.

Table 74. WLCSP18 - Mechanical data

Symbol	millimeters			inches(1)		
	Min	Typ	Max	Min	Typ	Max
A(2)	-	-	0.59	-	-	0.023
A1	-	0.18	-	-	0.007	-
A2	-	0.38	-	-	0.015	-

Table 74. WLCSP18 - Mechanical data (continued)

Symbol	millimeters			inches[1]		
	Min	Typ	Max	Min	Typ	Max
A3[3]	-	0.025	-	-	0.001	-
b[4]	0.22	0.25	0.28	0.009	0.010	0.011
D	1.84	1.86	1.88	0.072	0.073	0.074
E	2.12	2.14	2.16	0.083	0.084	0.085
e	-	0.40	-	-	0.016	-
e1	-	1.20	-	-	0.047	-
e2	-	1.39	-	-	0.055	-
F[5]	-	0.330	-	-	0.013	-
G[5]	-	0.390	-	-	0.015	-
aaa	-	-	0.10	-	-	0.004
bbb	-	-	0.10	-	-	0.004
ccc	-	-	0.10	-	-	0.004
ddd	-	-	0.05	-	-	0.002
eee	-	-	0.05	-	-	0.002

1. Values in inches are converted from mm and rounded to 3 decimal digits.
2. The maximum total package height is calculated by the RSS method (Root Sum Square) using nominal and tolerances values of A1 and A2.
3. Back side coating. Nominal dimension is rounded to the 3rd decimal place resulting from process capability.
4. Dimension is measured at the maximum bump diameter parallel to primary datum Z.
5. Calculated dimensions are rounded to the 3rd decimal place

Figure 37. WLCSP18 - Recommended footprint

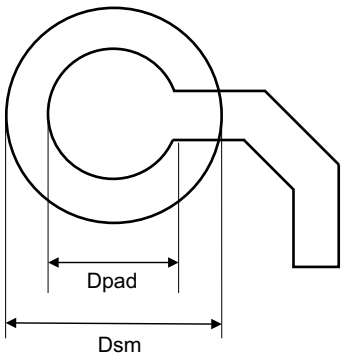

B06E_WLCSP18_DIE466_FP_V1

Table 75. WLCSP18 - Recommended PCB design rules

Dimension	Recommended values
Pitch	0.4 mm
Dpad	0,225 mm
Dsm	0.290 mm typ. (depends on soldermask registration tolerance)
Stencil opening	0.250 mm
Stencil thickness	0.100 mm

Device marking

The following figure gives an example of topside marking orientation versus ball A1 identifier location.

The printed markings may differ depending on the supply chain.

Other optional marking or inset/upset marks that identify the parts throughout supply chain operations, are not indicated below.

Figure 38. WLCSP18 package marking example

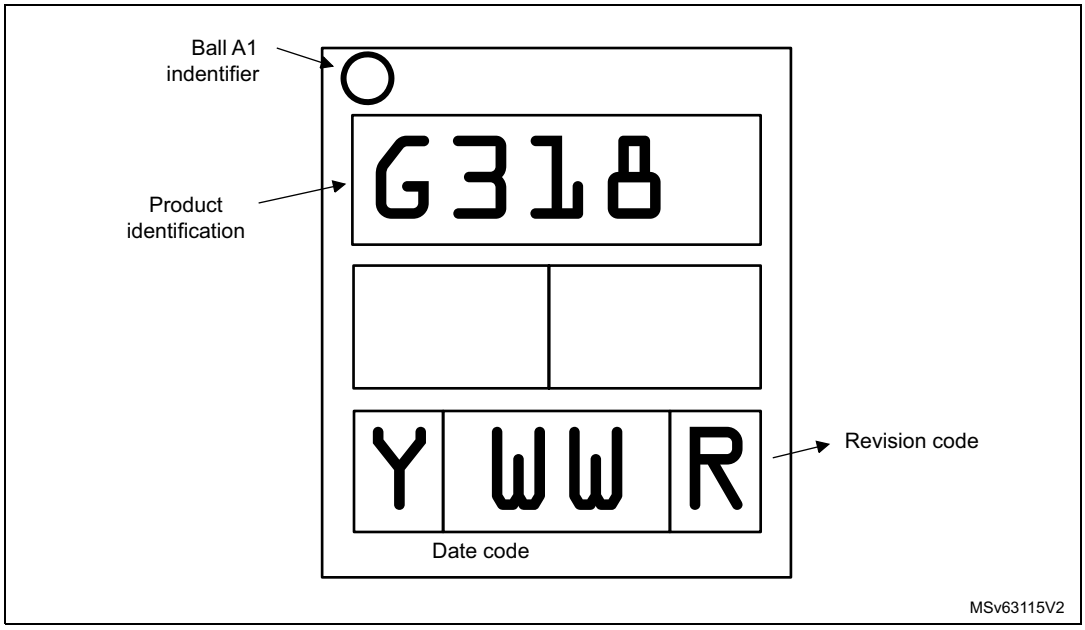

6.4 TSSOP20 package information (YA)

TSSOP20 is a 20-lead, 6.5 x 4.4 mm thin small-outline package with 0.65 mm pitch.

Figure 39. TSSOP20 – Outline

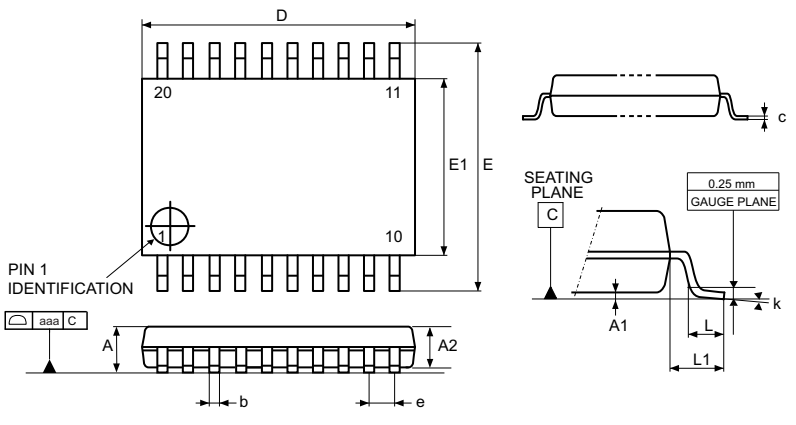

1. Drawing is not to scale.

Table 76. TSSOP20 – Mechanical data

Symbol	millimeters			inches(1)		
	Min.	Typ.	Max.	Min.	Typ.	Max.
A	-	-	1.200	-	-	0.0472
A1	0.050	-	0.150	0.0020	-	0.0059
A2	0.800	1.000	1.050	0.0315	0.0394	0.0413
b	0.190	-	0.300	0.0075	-	0.0118
c	0.090	-	0.200	0.0035	-	0.0079
D(2)	6.400	6.500	6.600	0.2520	0.2559	0.2598
E	6.200	6.400	6.600	0.2441	0.2520	0.2598
E1(3)	4.300	4.400	4.500	0.1693	0.1732	0.1772
e	-	0.650	-	-	0.0256	-
L	0.450	0.600	0.750	0.0177	0.0236	0.0295
L1	-	1.000	-	-	0.0394	-
k	0°	-	8°	0°	-	8°
aaa	-	-	0.100	-	-	0.0039

1. Values in inches are converted from mm and rounded to four decimal digits.
2. Dimension “D” does not include mold flash, protrusions or gate burrs. Mold flash, protrusions or gate burrs shall not exceed 0.15 mm per side.
3. Dimension “E1” does not include interlead flash or protrusions. Interlead flash or protrusions shall not exceed 0.25 mm per side.

Figure 40. TSSOP20 – Footprint example

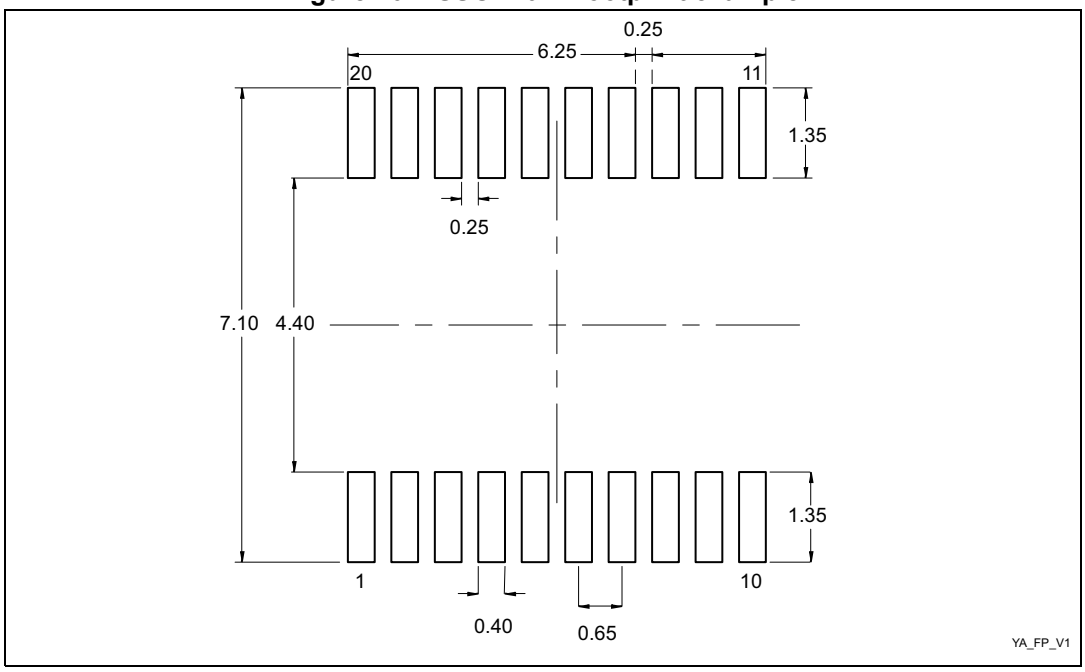

1. Dimensions are expressed in millimeters.

6.5 UFQFPN28 package information (A0B0)

UFQFPN28 is a 28-lead, 4 x 4 mm, 0.5 mm pitch, ultra thin fine pitch quad flat package.

Figure 41. UFQFPN28 - Outline

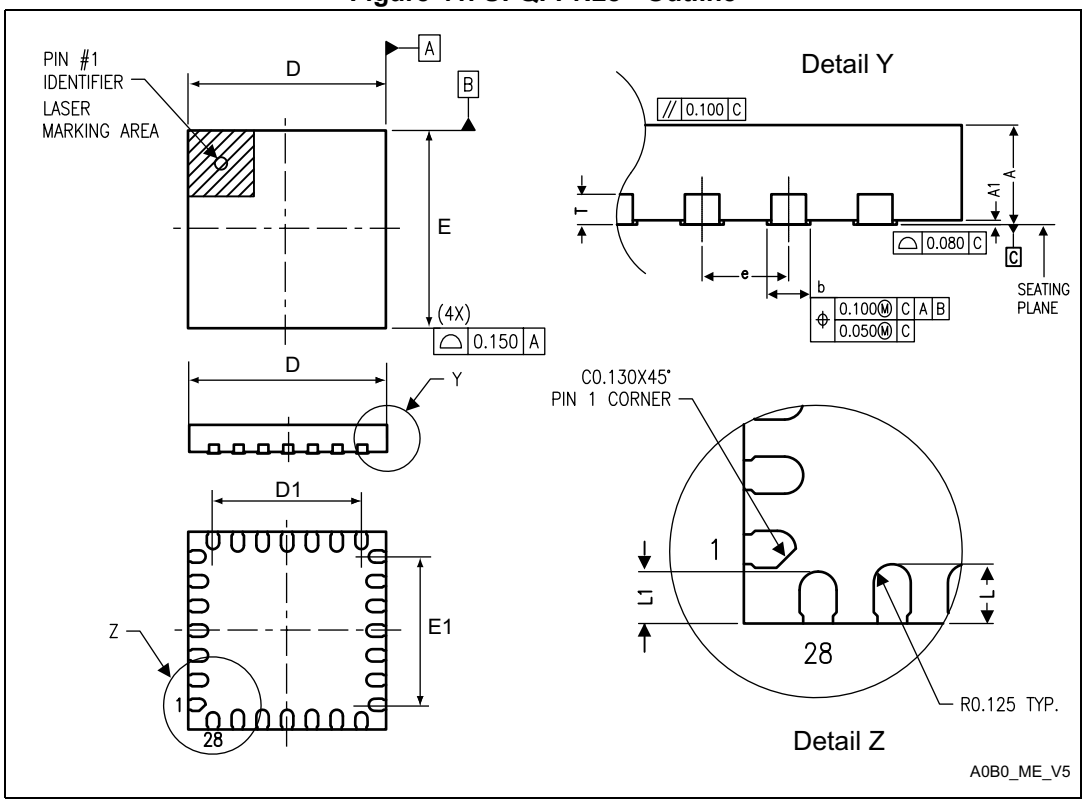

1. Drawing is not to scale.

Table 77. UFQFPN28 – Mechanical data(1)

Symbol	millimeters			inches		
	Min	Typ	Max	Min	Typ	Max
A	0.500	0.550	0.600	0.0197	0.0217	0.0236
A1	-	0.000	0.050	-	0.0000	0.0020
D	3.900	4.000	4.100	0.1535	0.1575	0.1614
D1	2.900	3.000	3.100	0.1142	0.1181	0.1220
E	3.900	4.000	4.100	0.1535	0.1575	0.1614
E1	2.900	3.000	3.100	0.1142	0.1181	0.1220
L	0.300	0.400	0.500	0.0118	0.0157	0.0197
L1	0.250	0.350	0.450	0.0098	0.0138	0.0177
T	-	0.152	-	-	0.0060	-
b	0.200	0.250	0.300	0.0079	0.0098	0.0118
e	-	0.500	-	-	0.0197	-

1. Values in inches are converted from mm and rounded to 4 decimal digits.

Figure 42. UFQFPN28 – Footprint example

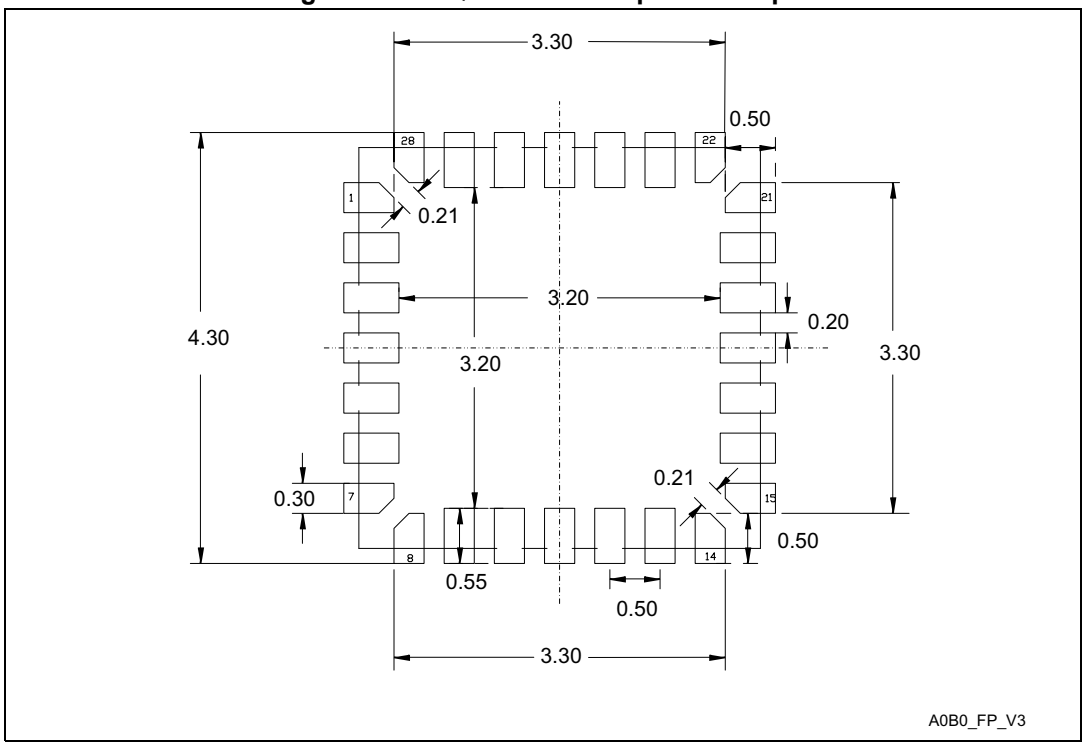

1. Dimensions are expressed in millimeters.

6.6 LQFP32 package information (5V)

This LQFP is a 32-pin, 7 x 7 mm, low-profile quad flat package.

Note: Figure 43 is not to scale.

Refer to the notes section for the list of notes on Figure 43 and Table 78.

Figure 43. LQFP32 - Outline

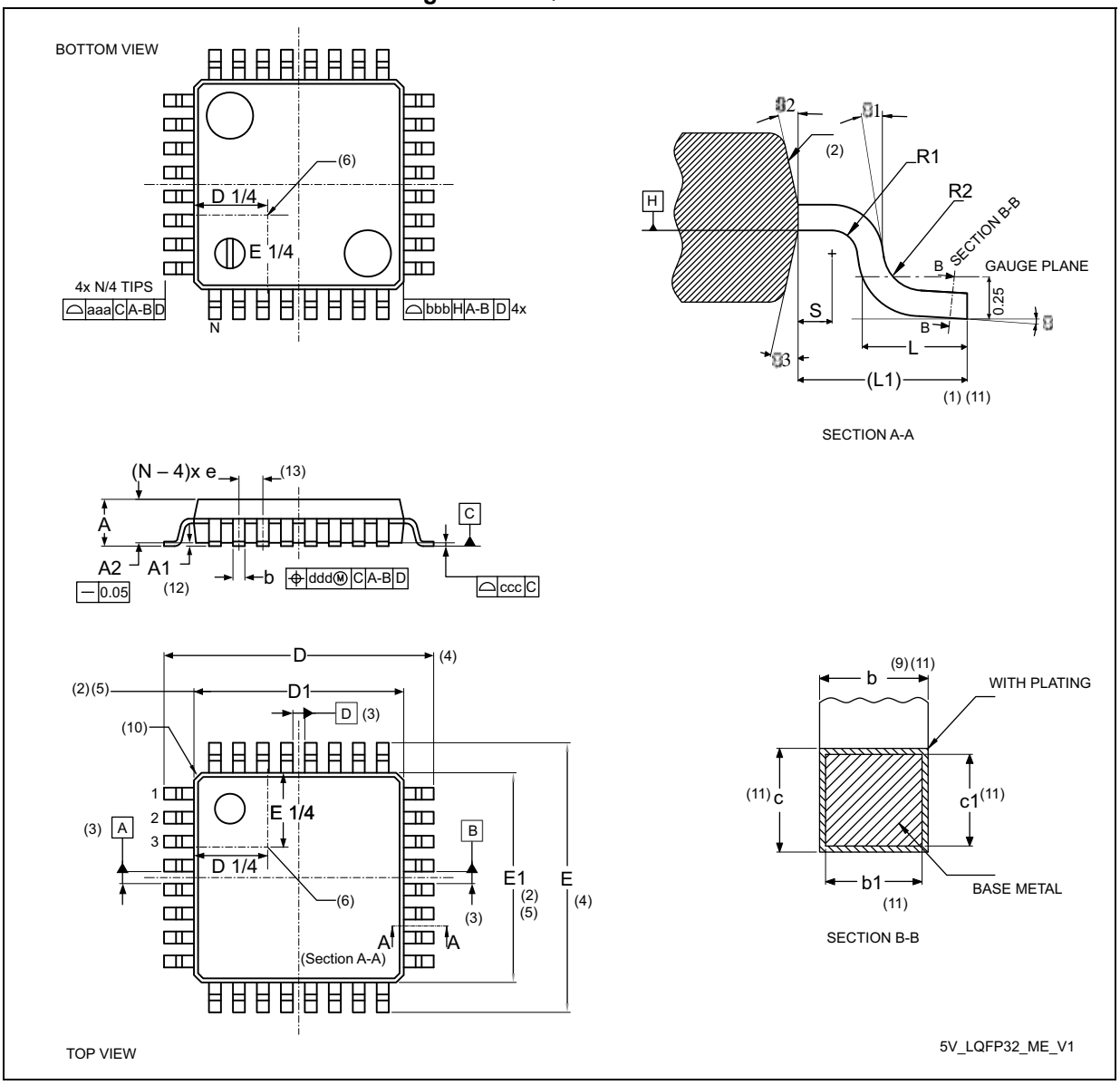

Table 78. LQFP32 - Mechanical data

Symbol	millimeters			inches[14]		
	Min	Typ	Max	Min	Typ	Max
θ	0°	3.5°	7°	0°	3.5°	7°
θ1	0°	-	-	0°	-	-
θ2	10°	12°	14°	10°	12°	14°
θ3	10°	12°	14°	10°	12°	14°
A	-	-	1.60	-	-	0.0630
A1[12]	0.05	-	0.15	0.0020	-	0.0059
A2	1.35	1.40	1.45	0.0531	0.0551	0.0571
b[9][11]	0.30	0.37	0.45	0.0118	0.0146	0.0177
b1[11]	0.30	0.35	0.40	0.0118	0.0128	0.0157
c[11]	0.09	-	0.20	0.0035	-	0.0079
c1[11]	0.09	-	0.16	0.0035	-	0.0063
D[4]	9.00 BSC			0.3543 BSC		
D1[2][5]	7.00 BSC			0.2756 BSC		
e	0.80 BSC			0.0315 BSC		
E[4]	9.00 BSC			0.3543 BSC		
E1[2][5]	7.00 BSC			0.2756 BSC		
L	0.45	0.60	0.75	0.0177	0.0236	0.0295
L1	1.00 REF			0.0394 REF		
N[13]	32					
R1	0.08	-	-	0.0031	-	-
R2	0.08	-	0.20	0.0031	-	0.0079
S	0.20	-	-	0.0079	-	-
aaa[1][7][15]	0.20			0.0079		
bbb[1][7][15]	0.20			0.0079		
ccc[1][7][15]	0.10			0.0039		
ddd[1][7][15]	0.20			0.0079		

Notes:

1. Dimensioning and tolerancing schemes conform to ASME Y14.5M-1994.
2. The top package body size may be smaller than the bottom package size by as much as 0.15 mm.
3. Datums A-B and D to be determined at datum plane H.
4. To be determined at the seating datum plane C.
5. Dimensions D1 and E1 do not include mold flash or protrusions. Allowable mold flash or protrusions is “0.25 mm” per side. D1 and E1 are maximum plastic body size dimensions including mold mismatch.
6. Details of pin 1 identifier are optional but must be located within the zone indicated.
7. All dimensions are in millimeters.
8. No intrusion is allowed inwards the leads.
9. Dimension b does not include a dambar protrusion. Allowable dambar protrusion shall not cause the lead width to exceed the maximum “b” dimension by more than 0.08 mm. Dambar cannot be located on the lower radius or the foot. The minimum space between the protrusion and an adjacent lead is 0.07 mm for 0.4 mm and 0.5 mm pitch packages.
10. The exact shape of each corner is optional.
11. These dimensions apply to the flat section of the lead between 0.10 mm and 0.25 mm from the lead tip.
12. A1 is defined as the distance from the seating plane to the lowest point on the package body.
13. N is the number of terminal positions for the specified body size.
14. Values in inches are converted from mm and rounded to four decimal digits.
15. Recommended values and tolerances.

Figure 44. LQFP32 – Footprint example

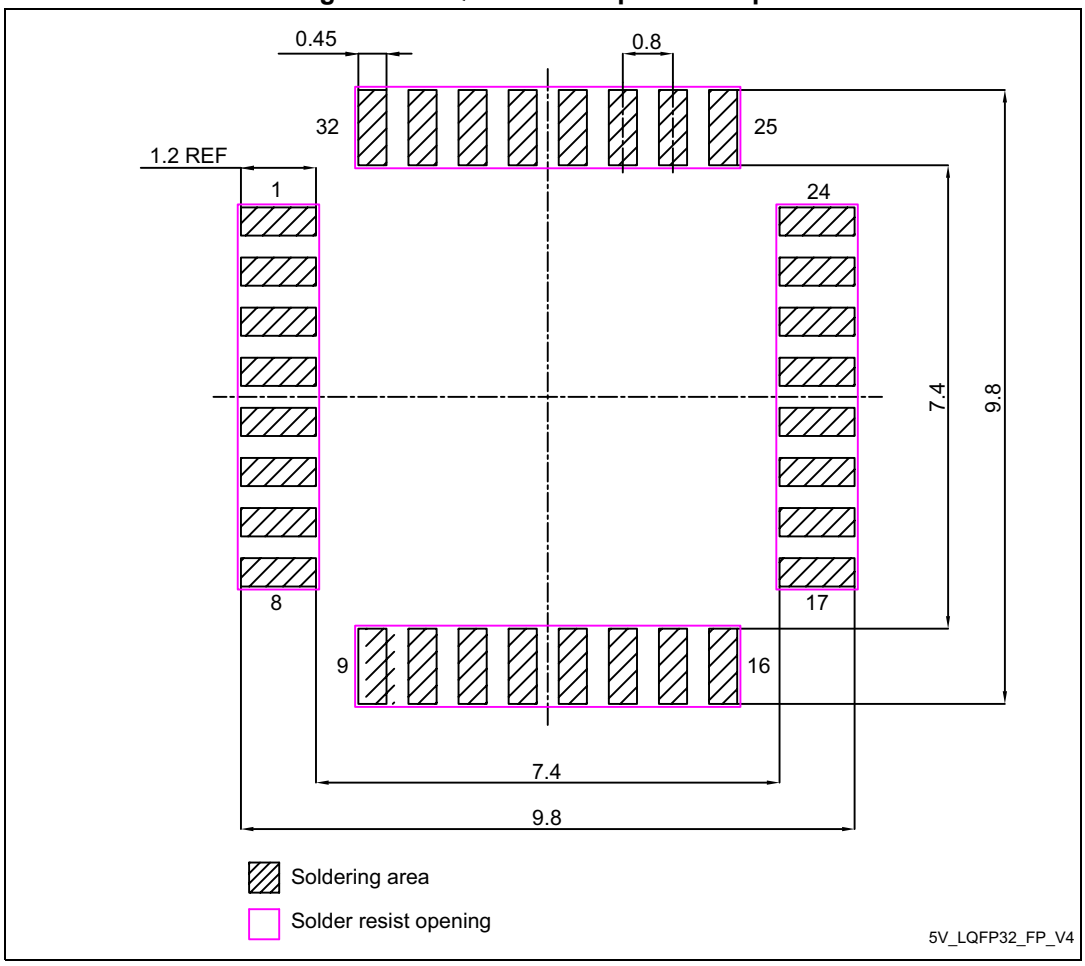

1. Dimensions are expressed in millimeters.

6.7 UFQFPN32 package information (A0B8)

This UFQFPN is a 32-pin, 5 x 5 mm, 0.5 mm pitch ultra thin fine pitch quad flat package.

Note: Figure 45 and Figure 46 are not to scale.
Refer to the notes section for the list of notes on Figure 45, Table 79, and Table 80.

Figure 45. UFQFPN32 - Outline

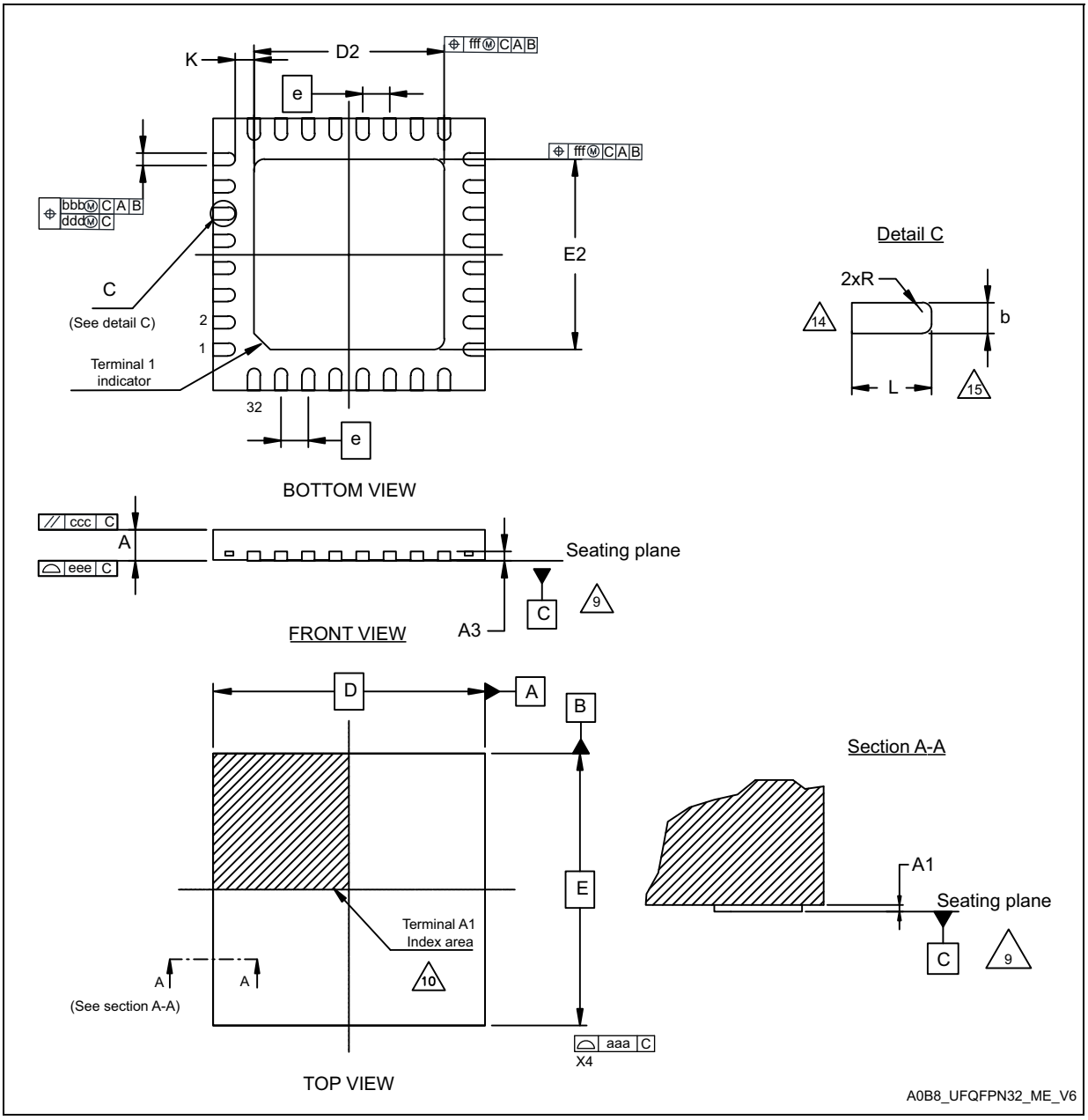

Table 79. UFQFPN32 - Mechanical data

Symbol	Millimeters			Inches[23]		
	Min	Typ	Max	Min	Typ	Max
A[17][18]	0.50	0.55	0.60	0.0197	0.0217	0.0236
A1[19]	0.00	-	0.05	0.000	-	0.0020
b[21][30]	0.18	0.25	0.30	0.0071	0.0098	0.0118
D[22]	5.00 BSC			0.1969 BSC		
D2	3.40	3.50	3.60	0.1339	0.1378	0.1417
E[22]	5.00 BSC			0.1969 BSC		
E2	3.40	3.50	3.60	0.1339	0.1378	0.1417
e	0.50 BSC			0.0197 BSC		
N[27]	32					
L[30]	0.30	-	0.50	0.0118	-	0.0197
R	0.09	-	-	0.0035	-	-

Table 80. Tolerance of form and position

Symbol	Millimeters	Inches[23]
aaa	0.15	0.0059
bbb	0.10	0.0039
ccc	0.10	0.0039
ddd	0.05	0.0020
eee	0.08	0.0315
fff	0.10	0.0039

Notes:

16. Dimensioning and tolerancing schemes conform to ASME Y14.5M-2018 except for European.
17. UFQFPN stands for ultra-thin fine pitch quad flat package no lead: A ≤ 0.60 mm / Fine pitch e ≤ 1.00 mm.
18. The profile height, A, is the distance from the seating plane to the highest point on the package. It is measured perpendicular to the seating plane.
19. A1 is the vertical distance from the bottom surface of the plastic body to the nearest metallized package feature.
20. A3 is the distance from the seating plane to the upper surface of the terminals.
21. Dimension b applies to metallized terminal. If the terminal has the optional radius on the other end of the terminal, the dimension b should not be measured in that radius area.
22. BSC stands for BASIC dimensions. It corresponds to the nominal value and has no tolerance.
23. Values in inches are converted from millimeters and rounded to four decimal digits.
24. Primary datum C is defined by the plane established by the contact points of three or more solder balls that support the device when it is placed on top of a planar surface.
25. Terminal A1 identifier and terminal numbering convention must conform to JEP95 SPP-002. Terminal A1 identifier must be located within the zone indicated on the outline drawing. Topside terminal A1 indicator may be a molded, or metallized feature. Optional indicator on bottom surface may be a molded, marked, or metallized feature.
26. ddd coplanarity zone applies to the exposed pad as well as the terminals.
27. N represents the total number of terminals.
28. K gives the minimum separation between any two terminals or the terminals and the edges of the exposed metal heat feature.
29. The inner edge of corner terminals may be chamfered or rounded to achieve minimum gap k. This feature should not affect the terminal width b, which is measured L/2 from the edge of the package body.
30. Dimension b and L are measured at the terminal planting surface.

Figure 46. UFQFPN32 - Footprint example

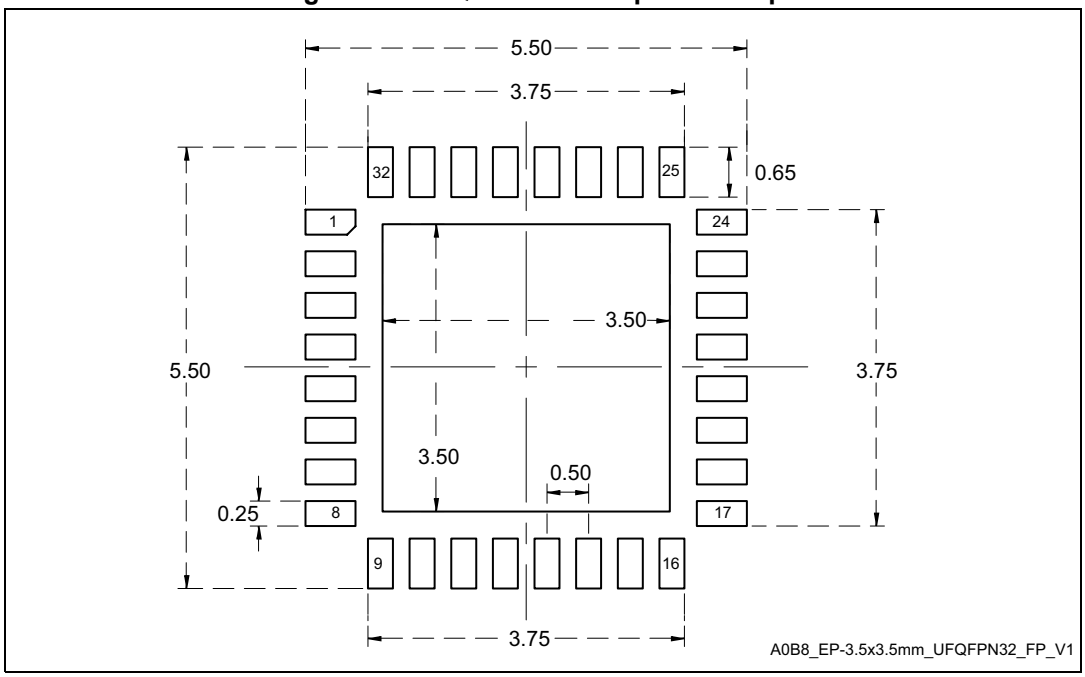

1. Dimensions are expressed in millimeters.

6.8 LQFP48 package information (5B)

This LQFP is a 48-pin, 7 x 7 mm low-profile quad flat package.

Note: See list of notes in the notes section.

Figure 47. LQFP48 - Outline(15)

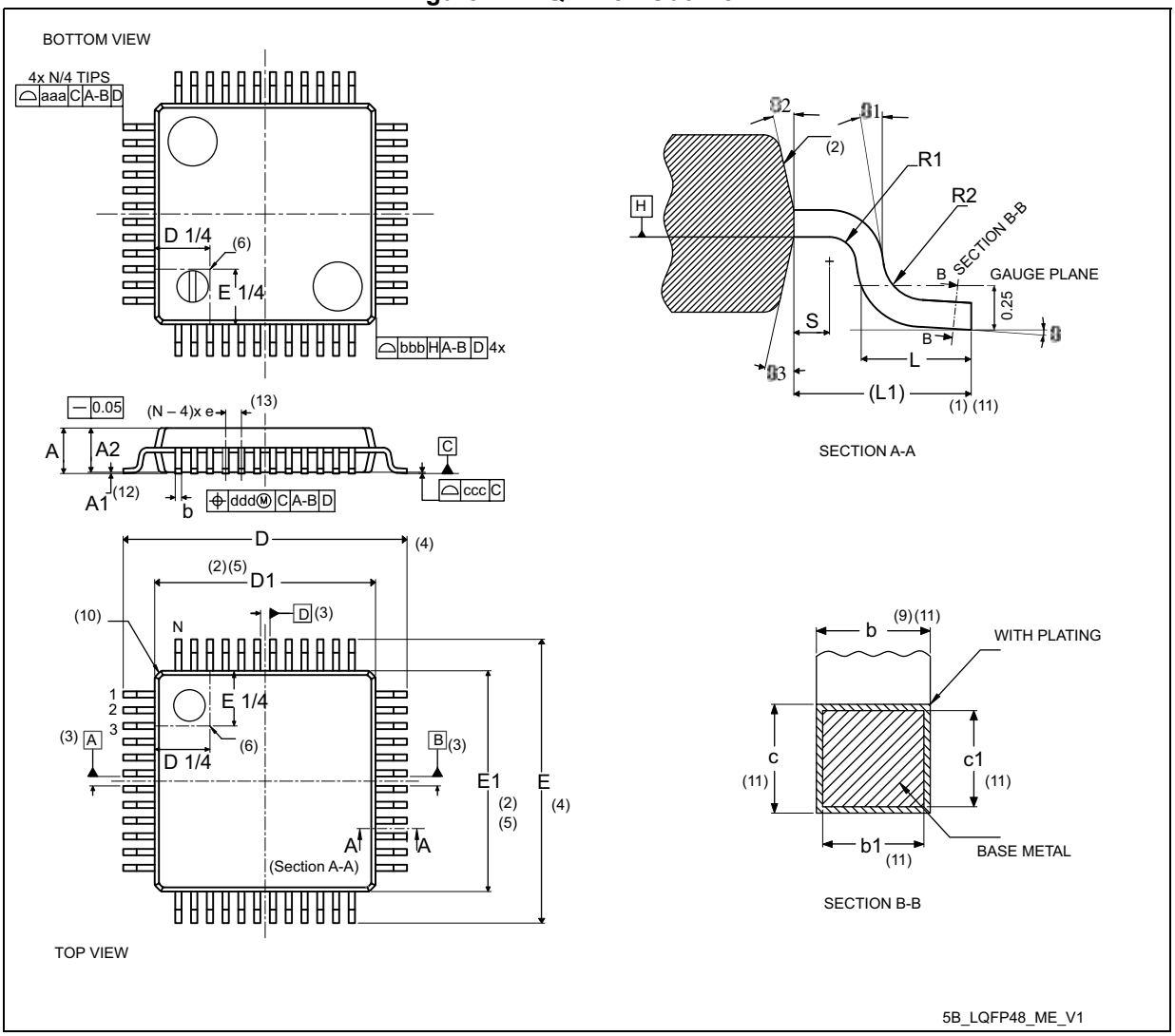

Table 81. LQFP48 - Mechanical data

Symbol	millimeters			inches[14]		
	Min	Typ	Max	Min	Typ	Max
A	-	-	1.60	-	-	0.0630
A1[12]	0.05	-	0.15	0.0020	-	0.0059
A2	1.35	1.40	1.45	0.0531	0.0551	0.0571
b[9][11]	0.17	0.22	0.27	0.0067	0.0087	0.0106
b1[11]	0.17	0.20	0.23	0.0067	0.0079	0.0090
c[11]	0.09	-	0.20	0.0035	-	0.0079
c1[11]	0.09	-	0.16	0.0035	-	0.0063
D[4]	9.00 BSC			0.3543 BSC		
D1[2][5]	7.00 BSC			0.2756 BSC		
E[4]	9.00 BSC			0.3543 BSC		
E1[2][5]	7.00 BSC			0.2756 BSC		
e	0.50 BSC			0.1970 BSC		
L	0.45	0.60	0.75	0.0177	0.0236	0.0295
L1	1.00 REF			0.0394 REF		
N[13]	48					
θ	0°	3.5°	7°	0°	3.5°	7°
θ1	0°	-	-	0°	-	-
θ2	10°	12°	14°	10°	12°	14°
θ3	10°	12°	14°	10°	12°	14°
R1	0.08	-	-	0.0031	-	-
R2	0.08	-	0.20	0.0031	-	0.0079
S	0.20	-	-	0.0079	-	-
aaa[1][7]	0.20			0.0079		
bbb[1][7]	0.20			0.0079		
ccc[1][7]	0.08			0.0031		
ddd[1][7]	0.08			0.0031		

Notes:

1. Dimensioning and tolerancing schemes conform to ASME Y14.5M-1994.
2. The Top package body size may be smaller than the bottom package size by as much as 0.15 mm.
3. Datums A-B and D to be determined at datum plane H.
4. To be determined at seating datum plane C.
5. Dimensions D1 and E1 do not include mold flash or protrusions. Allowable mold flash or protrusions is “0.25 mm” per side. D1 and E1 are Maximum plastic body size dimensions including mold mismatch.
6. Details of pin 1 identifier are optional but must be located within the zone indicated.
7. All Dimensions are in millimeters.
8. No intrusion allowed inwards the leads.
9. Dimension “b” does not include dambar protrusion. Allowable dambar protrusion shall not cause the lead width to exceed the maximum “b” dimension by more than 0.08 mm. Dambar cannot be located on the lower radius or the foot. Minimum space between protrusion and an adjacent lead is 0.07 mm for 0.4 mm and 0.5 mm pitch packages.
10. Exact shape of each corner is optional.
11. These dimensions apply to the flat section of the lead between 0.10 mm and 0.25 mm from the lead tip.
12. A1 is defined as the distance from the seating plane to the lowest point on the package body.
13. “N” is the number of terminal positions for the specified body size.
14. Values in inches are converted from mm and rounded to 4 decimal digits.
15. Drawing is not to scale.

Figure 48. LQFP48 - Footprint example

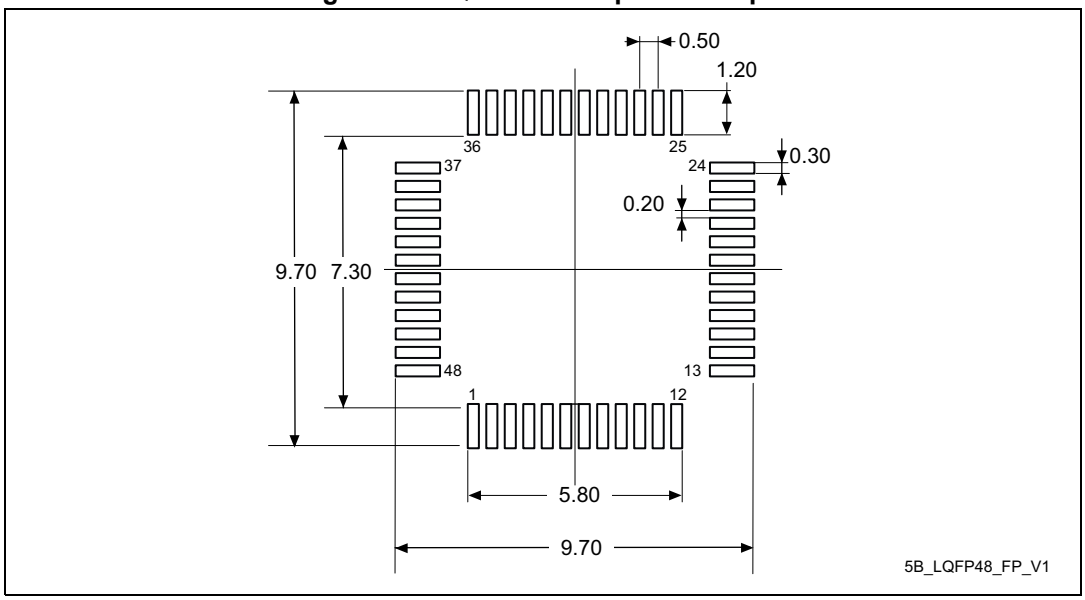

1. Dimensions are expressed in millimeters.

6.9 UFQFPN48 package information (A0B9)

This UFQFPN is a 48-lead, 7 x 7 mm, 0.5 mm pitch, ultra thin fine pitch quad flat package.

Figure 49. UFQFPN48 – Outline

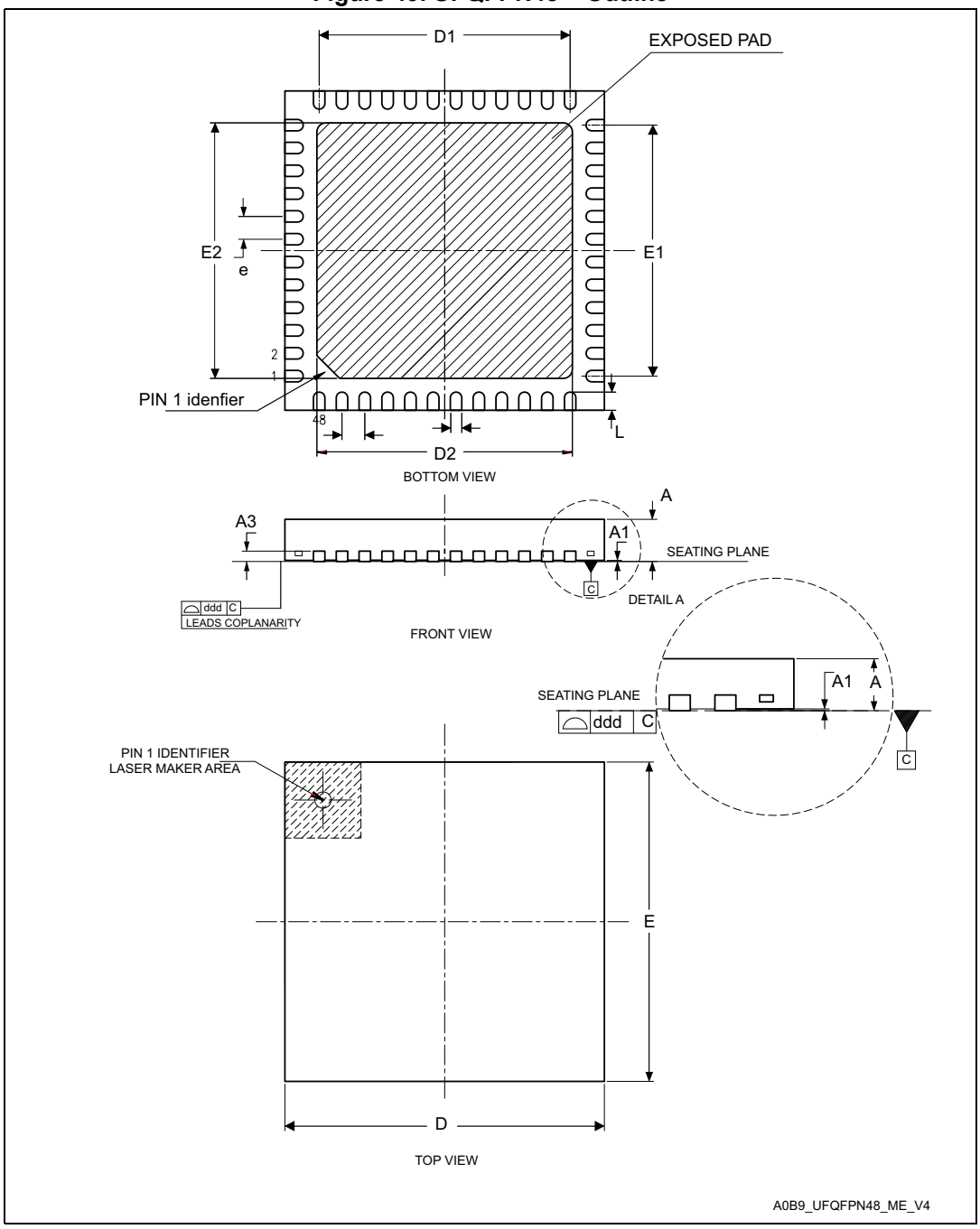

1. Drawing is not to scale.
2. All leads/pads should also be soldered to the PCB to improve the lead/pad solder joint life.
3. There is an exposed die pad on the underside of the UFQFPN48 package. It is recommended to connect and solder this back-side pad to PCB ground.

Table 82. UFQFPN48 – Mechanical data

Symbol	millimeters			inches[1]		
	Min	Typ	Max	Min	Typ	Max
A	0.500	0.550	0.600	0.0197	0.0217	0.0236
A1	0.000	0.020	0.050	0.0000	0.0008	0.0020
A3	-	0.152	-	-	0.0060	-
b	0.200	0.250	0.300	0.0079	0.0098	0.0118
D[2]	6.900	7.000	7.100	0.2717	0.2756	0.2795
D1	5.400	5.500	5.600	0.2126	0.2165	0.2205
D2[3]	5.500	5.600	5.700	0.2165	0.2205	0.2244
E[2]	6.900	7.000	7.100	0.2717	0.2756	0.2795
E1	5.400	5.500	5.600	0.2126	0.2165	0.2205
E2[3]	5.500	5.600	5.700	0.2165	0.2205	0.2244
e	-	0.500	-	-	0.0197	-
L	0.300	0.400	0.500	0.0118	0.0157	0.0197
ddd	-	-	0.080	-	-	0.0031

1. Values in inches are converted from mm and rounded to four decimal digits.
2. Dimensions D and E do not include mold protrusion, not exceed 0.15 mm.
3. Dimensions D2 and E2 are not in accordance with JEDEC.

Figure 50. UFQFPN48 – Footprint example

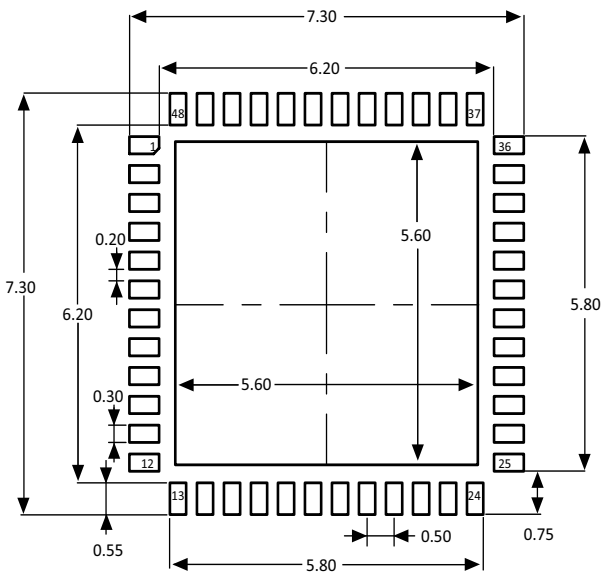

1. Dimensions are expressed in millimeters.

6.10 Thermal characteristics

The operating junction temperature T_J must never exceed the maximum given in *Table 21: General operating conditions*

The maximum junction temperature in °C that the device can reach if respecting the operating conditions, is:

$$T_J(max) = T_A(max) + P_D(max) \times \Theta_{JA}$$

where:

- $T_A(max)$ is the maximum operating ambient temperature in °C,
- Θ_{JA} is the package junction-to-ambient thermal resistance, in °C/W,
- $P_D = P_{INT} + P_{I/O}$,
  - P_{INT} is power dissipation contribution from product of I_{DD} and V_{DD}
  - $P_{I/O}$ is power dissipation contribution from output ports where:
    $P_{I/O} = \Sigma (V_{OL} \times I_{OL}) + \Sigma ((V_{DDIO1} - V_{OH}) \times I_{OH})$,
    taking into account the actual V_{OL} / I_{OL} and V_{OH} / I_{OH} of the I/Os at low and high level in the application.

Table 83. Package thermal characteristics

Symbol	Parameter	Package	Value	Unit
Θ_{JA}	Thermal resistance junction-ambient	SO8N 4.9 × 6 mm	111	°C/W
		WLCSP18 1.86 × 2.14 mm	91	
		TSSOP20 6.4 × 4.4 mm	94	
		UFQFPN28 4 × 4 mm	83	
		LQFP32 7 × 7 mm	66	
		UFQFPN32 5 × 5 mm	41	
		LQFP48 7 × 7 mm	66	
		UFQFPN48 7 × 7 mm	33	
Θ_{JB}	Thermal resistance junction-board	SO8N 4.9 × 6 mm	70	°C/W
		WLCSP18 1.86 × 2.14 mm	61	
		TSSOP20 6.4 × 4.4 mm	55	
		UFQFPN28 4 × 4 mm	45	
		LQFP32 7 × 7 mm	35	
		UFQFPN32 5 × 5 mm	23	
		LQFP48 7 × 7 mm	35	
		UFQFPN48 7 × 7 mm	18	

Table 83. Package thermal characteristics (continued)

Symbol	Parameter	Package	Value	Unit
Θ_{JC}	Thermal resistance junction-case	SO8N 4.9 × 6 mm	38	°C/W
		WLCSP18 1.86 × 2.14 mm	6	
		TSSOP20 6.4 × 4.4 mm	26	
		UFQFPN28 4 × 4 mm	30	
		LQFP32 7 × 7 mm	17	
		UFQFPN32 5 × 5 mm	20	
		LQFP48 7 × 7 mm	17	
		UFQFPN48 7 × 7 mm	14	

6.10.1 Reference document

JESD51-2 Integrated Circuits Thermal Test Method Environment Conditions - Natural Convection (still air). Available from www.jedec.org.

6.10.2 Selecting the product temperature range

The temperature range is specified in the ordering information scheme shown in *Section 7: Ordering information*.

Each temperature range suffix corresponds to a specific guaranteed ambient temperature at maximum dissipation and to a specific maximum junction temperature.

As applications do not commonly use microcontrollers at their maximum power consumption, it is useful to calculate the exact power consumption and junction temperature to determine which temperature range best suits the application.

The following example shows how to calculate the temperature range needed for a given application.

Example:

Assuming the following worst application conditions:

- ambient temperature T_A = 50 °C (measured according to JESD51-2)
- I_{DD} = 50 mA; V_{DD} = 3.6 V
- 20 I/Os simultaneously used as output at low level with I_{OL} = 8 mA (V_{OL}= 0.4 V), and
- 8 I/Os simultaneously used as output at low level with I_{OL} = 20 mA (V_{OL}= 1.3 V),

the power consumption from power supply P_{INT} is:

P_{INT} = 50 mA × 3.6 V= 118 mW,

the power loss through I/Os P_{IO} is

P_{IO} = 20 × 8 mA × 0.4 V + 8 × 20 mA × 1.3 V = 272 mW,

and the total power P_D to dissipate is:

P_D = 180 mW + 272 mW = 452 mW

For a package with Θ_{JA}= 65 °C/W, the junction temperature stabilizes at:

T_J = 50°C + (65 °C/W × 452 mW) = 50 °C + 29.4 °C = 79.4 °C

As a conclusion, product version with suffix 6 (maximum allowed T_J = 105° C) is sufficient for this application.

If the same application was used in a hot environment with maximum T_A greater than 75.5 °C, the junction temperature would exceed 105°C and the product version allowing higher maximum T_J would have to be ordered.

7 Ordering information

Example STM32 G 031 K 8 T 6 xyy

Device family

STM32 = Arm® based 32-bit microcontroller

Product type

G = general-purpose

Device subfamily

031 = STM32G031

Pin count

J = 8
Y = 18
F = 20
G = 28
K = 32
C = 48

Flash memory size

4 = 16 Kbytes
6 = 32 Kbytes
8 = 64 Kbytes

Package type

T = LQFP
U = UFQFPN
Y = WLCSP
P = TSSOP
M = SO␣N

Temperature range

6 = -40 to 85°C (105°C junction)
7 = -40 to 105°C (125°C junction)
3 = -40 to 125°C (130°C junction)

Options

␣TR = tape and reel packing
␣␣␣ = tray packing
other = 3-character ID incl. custom Flash code and packing information

For a list of available options (memory, package, and so on) or for further information on any aspect of this device, contact your nearest ST sales office.

8 Important security notice

The STMicroelectronics group of companies (ST) places a high value on product security, which is why the ST product(s) identified in this documentation may be certified by various security certification bodies and/or may implement our own security measures as set forth herein. However, no level of security certification and/or built-in security measures can guarantee that ST products are resistant to all forms of attacks. As such, it is the responsibility of each of ST's customers to determine if the level of security provided in an ST product meets the customer needs both in relation to the ST product alone, as well as when combined with other components and/or software for the customer end product or application. In particular, take note that:

- ST products may have been certified by one or more security certification bodies, such as Platform Security Architecture (www.psacertified.org) and/or Security Evaluation standard for IoT Platforms (www.trustcb.com). For details concerning whether the ST product(s) referenced herein have received security certification along with the level and current status of such certification, either visit the relevant certification standards website or go to the relevant product page on www.st.com for the most up to date information. As the status and/or level of security certification for an ST product can change from time to time, customers should re-check security certification status/level as needed. If an ST product is not shown to be certified under a particular security standard, customers should not assume it is certified.
- Certification bodies have the right to evaluate, grant and revoke security certification in relation to ST products. These certification bodies are therefore independently responsible for granting or revoking security certification for an ST product, and ST does not take any responsibility for mistakes, evaluations, assessments, testing, or other activity carried out by the certification body with respect to any ST product.
- Industry-based cryptographic algorithms (such as AES, DES, or MD5) and other open standard technologies which may be used in conjunction with an ST product are based on standards which were not developed by ST. ST does not take responsibility for any flaws in such cryptographic algorithms or open technologies or for any methods which have been or may be developed to bypass, decrypt or crack such algorithms or technologies.
- While robust security testing may be done, no level of certification can absolutely guarantee protections against all attacks, including, for example, against advanced attacks which have not been tested for, against new or unidentified forms of attack, or against any form of attack when using an ST product outside of its specification or intended use, or in conjunction with other components or software which are used by customer to create their end product or application. ST is not responsible for resistance against such attacks. As such, regardless of the incorporated security features and/or any information or support that may be provided by ST, each customer is solely responsible for determining if the level of attacks tested for meets their needs, both in relation to the ST product alone and when incorporated into a customer end product or application.
- All security features of ST products (inclusive of any hardware, software, documentation, and the like), including but not limited to any enhanced security features added by ST, are provided on an "AS IS" BASIS. AS SUCH, TO THE EXTENT PERMITTED BY APPLICABLE LAW, ST DISCLAIMS ALL WARRANTIES, EXPRESS OR IMPLIED, INCLUDING BUT NOT LIMITED TO THE IMPLIED WARRANTIES OF MERCHANTABILITY OR FITNESS FOR A PARTICULAR PURPOSE, unless the applicable written and signed contract terms specifically provide otherwise.

9 Revision history

Table 84. Document revision history

Date	Revision	Changes
26-Jun-2019	1	Initial release
22-Apr-2020	2	Cover page updated; *Section 2: Description* updated; *Figure 1: Block diagram* updated; *Table 12: Pin assignment and description* updated; *Table 18: Voltage characteristics* updated; *Table 19: Current characteristics*: Note 2 removed; *Table 21: General operating conditions* and *Section 7: Ordering information*: Added Ta range -40 to 105°C; *Table 59: ADC characteristics*: major update; Corrected figures with package marking examples.
05-Oct-2021	3	– *Table 2: STM32G031x4/x6/x8 device features and peripheral counts* – *Section 3.7.1: Power supply schemes* – *Section 3.9: Clocks and startup* – *Table 12: Pin assignment and description* – *Table 43: PLL characteristics* (footnotes) – *Table 48: ESD absolute maximum ratings* – *Table 62: VREFBUF characteristics* – *Table 6: Package information*: all subsections rearranged – *Table 74: WLCSP18 - Mechanical data* – *Table 83: Package thermal characteristics* – Example in *Section 6.10.2: Selecting the product temperature range*
20-Jun-2025	4	Cover page updated; Added references to the reference manual and errata sheet into *Section 1: Introduction*; Updated *Table 2: STM32G031x4/x6/x8 device features and peripheral counts*; Updated *Table 3: Access status versus readout protection level and execution modes* (OTP added); Updated *Section 3.5: Boot modes*; Updated *Section 3.7.6: VBAT operation*; Updated *Section 3.14: Analog-to-digital converter (ADC)*; Updated *Table 7: Timer feature comparison*; Updated *Section 3.16.1: Advanced-control timer (TIM1)*; Updated *Section 3.19: Universal synchronous/asynchronous receiver transmitter (USART)*;

Table 84. Document revision history (continued)

Date	Revision	Changes
20-Jun-2025	4 (cont'd)	Updated *Section 4: Pinouts, pin description and alternate functions* (packages ordered from lowest to highest pin count), with *Table 11: Terms and symbols used in Pin assignment and description table*; Updated *Section 5.2: Absolute maximum ratings*, with *Table 18: Voltage characteristics* and *Table 19: Current characteristics*; In *Section 5.3: Operating conditions*, all table footnotes "Guaranteed by design" changed to "Specified by design. Not tested in production", updated *Table 21: General operating conditions*, *Section : I/O system current consumption*, *Table 47: EMI characteristics*, *Section : General input/output characteristics* (a note added), *Figure 21: I/O input characteristics*, *Table 53: Output voltage characteristics*, title change for *Section : Output buffer timing characteristics* and *Table 54: Non-FT_c I/O output timing characteristics*, *Figure 23: I/O AC characteristics definition*, *Figure 24: Recommended NRST pin protection*, added *Section 5.3.16: Extended interrupt and event controller input (EXTI) characteristics*, updated *Table 59: ADC characteristics*, *Table 61: ADC accuracy*, *Figure 25: ADC accuracy characteristics*, *Figure 26: ADC typical connection diagram*, *Table 62: VREFBUF characteristics*, *Figure 27: SPI timing diagram - slave mode and CPHA = 0*, *Figure 28: SPI timing diagram - slave mode and CPHA = 1*, title of *Section : USART (SPI mode) characteristics* and *Table 72: USART characteristics in SPI mode*, added *Figure 32: USART timing diagram in SPI master mode* and *Figure 33: USART timing diagram in SPI slave mode*; Updated *Section 6: Package information*, with added *Section 6.1: Device marking*, and removed corresponding subsections for all packages except for WLCSP18; updated *Section 6.7: UFQFPN32 package information (A0B8)*; Updated *Table 83: Package thermal characteristics*; Added *Section 8: Important security notice*.

IMPORTANT NOTICE – READ CAREFULLY

STMicroelectronics NV and its subsidiaries (“ST”) reserve the right to make changes, corrections, enhancements, modifications, and improvements to ST products and/or to this document at any time without notice. Purchasers should obtain the latest relevant information on ST products before placing orders. ST products are sold pursuant to ST’s terms and conditions of sale in place at the time of order acknowledgment.

Purchasers are solely responsible for the choice, selection, and use of ST products and ST assumes no liability for application assistance or the design of purchasers’ products.

No license, express or implied, to any intellectual property right is granted by ST herein.

Resale of ST products with provisions different from the information set forth herein shall void any warranty granted by ST for such product.

ST and the ST logo are trademarks of ST. For additional information about ST trademarks, refer to www.st.com/trademarks. All other product or service names are the property of their respective owners.

Information in this document supersedes and replaces information previously supplied in any prior versions of this document.

© 2025 STMicroelectronics – All rights reserved