STM32L052x6 STM32L052x8

Ultra-low-power 32-bit MCU Arm®-based Cortex®-M0+, up to 64 KB Flash memory, 8 KB SRAM, 2 KB EEPROM, USB, ADC, DAC

Datasheet - production data

Features

Includes ST state-of-the-art patented technology

- Ultra-low-power platform
  - 1.65 V to 3.6 V power supply
  - -40 to 125 °C temperature range
  - 0.27 µA Standby mode (2 wakeup pins)
  - 0.4 µA Stop mode (16 wakeup lines)
  - 0.8 µA Stop mode + RTC + 8-Kbyte RAM retention
  - 88 µA/MHz in Run mode
  - 3.5 µs wakeup time (from RAM)
  - 5 µs wakeup time (from Flash memory)
- Core: Arm® 32-bit Cortex®-M0+ with MPU
  - From 32 kHz up to 32 MHz max.
  - 0.95 DMIPS/MHz
- Memories
  - Up to 64-Kbyte Flash memory with ECC
  - 8-Kbyte RAM
  - 2 Kbytes of data EEPROM with ECC
  - 20-byte backup register
  - Sector protection against R/W operation
- Up to 51 fast I/Os (45 I/Os 5V tolerant)
- Reset and supply management
  - Ultra-safe, low-power BOR (brownout reset) with 5 selectable thresholds
  - Ultra-low-power POR/PDR
  - Programmable voltage detector (PVD)
- Clock sources
  - 1 to 25 MHz crystal oscillator
  - 32 kHz oscillator for RTC with calibration
  - High speed internal 16 MHz factory-trimmed RC (+/- 1%)
  - Internal low-power 37 kHz RC
  - Internal multispeed low-power 65 kHz to 4.2 MHz RC
  - Internal self calibration of 48 MHz RC for USB
  - PLL for CPU clock
- Pre-programmed bootloader
  - USART, SPI supported

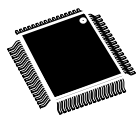

LQFP32 (7x7 mm)
LQFP48 (7x7 mm)
LQFP64 (10x10 mm)



UFQFPN32 (5x5 mm)
UFQFPN48 (7x7 mm)



Standard and thin WLCSP36 (2.61x2.88 mm)

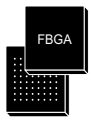

TFBGA64 (5x5 mm)

- Development support
  - Serial wire debug supported
- Rich Analog peripherals
  - 12-bit ADC 1.14 Msps up to 16 channels (down to 1.65 V)
  - 12-bit 1 channel DAC with output buffers (down to 1.8 V)
  - 2x ultra-low-power comparators (window mode and wake up capability, down to 1.65 V)
- Up to 24 capacitive sensing channels supporting touchkey, linear and rotary touch sensors
- 7-channel DMA controller, supporting ADC, SPI, I2C, USART, DAC, Timers
- 8x peripheral communication interfaces
  - 1x USB 2.0 crystal-less, battery charging detection and LPM
  - 2x USART (ISO 7816, IrDA), 1x UART (low power)
  - Up to 4x SPI 16 Mbits/s
  - 2x I2C (SMBus/PMBus)
- 9x timers: 1x 16-bit with up to 4 channels, 2x 16-bit with up to 2 channels, 1x 16-bit ultra-low-power timer, 1x SysTick, 1x RTC, 1x 16-bit basic for DAC, and 2x watchdogs (independent/window)
- CRC calculation unit, 96-bit unique ID
- True RNG and firewall protection
- All packages are ECOPACK2

Table 1. Device summary

Reference	Part number
STM32L052x6	STM32L052C6, STM32L052K6, STM32L052R6, STM32L052T6
STM32L052x8	STM32L052C8, STM32L052K8, STM32L052R8, STM32L052T8

This is information on a product in full production. www.st.com

Contents

1 Introduction 10

2 Description 11

2.1 Device overview 12

2.2 Ultra-low-power device continuum 15

3 Functional overview 16

3.1 Low-power modes 16

3.2 Interconnect matrix 21

3.3 Arm® Cortex®-M0+ core with MPU 22

3.4 Reset and supply management 23

3.4.1 Power supply schemes 23

3.4.2 Power supply supervisor 23

3.4.3 Voltage regulator 24

3.5 Clock management 24

3.6 Low-power real-time clock and backup registers 27

3.7 General-purpose inputs/outputs (GPIOs) 27

3.8 Memories 28

3.9 Boot modes 28

3.10 Direct memory access (DMA) 29

3.11 Analog-to-digital converter (ADC) 29

3.12 Temperature sensor 29

3.12.1 Internal voltage reference (V_{REFINT}) 30

3.13 Digital-to-analog converter (DAC) 30

3.14 Ultra-low-power comparators and reference voltage 31

3.15 System configuration controller 31

3.16 Touch sensing controller (TSC) 31

3.17 Timers and watchdogs 32

3.17.1 General-purpose timers (TIM2, TIM21 and TIM22) 33

3.17.2 Low-power Timer (LPTIM) 33

3.17.3 Basic timer (TIM6) 33

3.17.4 SysTick timer 34

3.17.5 Independent watchdog (IWDG) . . . 34
3.17.6 Window watchdog (WWDG) . . . 34
3.18 Communication interfaces . . . 34
3.18.1 I2C bus . . . 34
3.18.2 Universal synchronous/asynchronous receiver transmitter (USART) . . . 35
3.18.3 Low-power universal asynchronous receiver transmitter (LPUART) . . . 36
3.18.4 Serial peripheral interface (SPI)/Inter-integrated sound (I2S) . . . 36
3.18.5 Universal serial bus (USB) . . . 37
3.19 Clock recovery system (CRS) . . . 37
3.20 Cyclic redundancy check (CRC) calculation unit . . . 37
3.21 Serial wire debug port (SW-DP) . . . 37

4 Pin descriptions . . . 38

5 Memory mapping . . . 53

6 Electrical characteristics . . . 54
6.1 Parameter conditions . . . 54
6.1.1 Minimum and maximum values . . . 54
6.1.2 Typical values . . . 54
6.1.3 Typical curves . . . 54
6.1.4 Loading capacitor . . . 54
6.1.5 Pin input voltage . . . 54
6.1.6 Power supply scheme . . . 55
6.1.7 Current consumption measurement . . . 55
6.2 Absolute maximum ratings . . . 56
6.3 Operating conditions . . . 58
6.3.1 General operating conditions . . . 58
6.3.2 Embedded reset and power control block characteristics . . . 60
6.3.3 Embedded internal reference voltage . . . 61
6.3.4 Supply current characteristics . . . 62
6.3.5 Wakeup time from low-power mode . . . 73
6.3.6 External clock source characteristics . . . 75
6.3.7 Internal clock source characteristics . . . 79
6.3.8 PLL characteristics . . . 82
6.3.9 Memory characteristics . . . 83
6.3.10 EMC characteristics . . . 84

6.3.11 Electrical sensitivity characteristics 86
6.3.12 I/O current injection characteristics 87
6.3.13 I/O port characteristics 88
6.3.14 NRST pin characteristics 92
6.3.15 12-bit ADC characteristics 93
6.3.16 DAC electrical characteristics 99
6.3.17 Temperature sensor characteristics 102
6.3.18 Comparators 102
6.3.19 Timer characteristics 104
6.3.20 Communications interfaces 104

7 Package information 115
7.1 LQFP64 package information 115
7.2 TFBGA64 package information 119
7.3 LQFP48 package information 122
7.4 UFQFPN48 package information 125
7.5 Standard WLCSP36 package information 128
7.6 Thin WLCSP36 package information 131
7.7 LQFP32 package information 134
7.8 UFQFPN32 package information 137
7.9 Thermal characteristics 140
7.9.1 Reference document 141

8 Ordering information 142

9 Revision history 143

List of tables

Table 1. Device summary . . . 1
Table 2. Ultra-low-power STM32L052x6/x8 device features and peripheral counts. . . . 12
Table 3. Functionalities depending on the operating power supply range . . . 18
Table 4. CPU frequency range depending on dynamic voltage scaling . . . 18
Table 5. Functionalities depending on the working mode (from Run/active down to standby) . . . 19
Table 6. STM32L052x6/8 peripherals interconnect matrix . . . 21
Table 7. Temperature sensor calibration values. . . . 30
Table 8. Internal voltage reference measured values. . . . 30
Table 9. Capacitive sensing GPIOs available on STM32L052x6/8 devices . . . 32
Table 10. Timer feature comparison . . . 32
Table 11. Comparison of I2C analog and digital filters . . . 34
Table 12. STM32L052x6/8 I^2C implementation . . . 35
Table 13. USART implementation . . . 35
Table 14. SPI/I2S implementation . . . 37
Table 15. Legend/abbreviations used in the pinout table . . . 42
Table 16. STM32L052x6/8 pin definitions . . . 43
Table 17. Alternate function port A . . . 49
Table 18. Alternate function port B . . . 50
Table 19. Alternate function port C . . . 51
Table 20. Alternate function port D . . . 52
Table 21. Alternate function port H . . . 52
Table 22. Voltage characteristics . . . 56
Table 23. Current characteristics . . . 57
Table 24. Thermal characteristics. . . . 57
Table 25. General operating conditions . . . 58
Table 26. Embedded reset and power control block characteristics. . . . 60
Table 27. Embedded internal reference voltage calibration values . . . 61
Table 28. Embedded internal reference voltage. . . . 61
Table 29. Current consumption in Run mode, code with data processing running from Flash. . . . 63
Table 30. Current consumption in Run mode vs code type, code with data processing running from Flash . . . 63
Table 31. Current consumption in Run mode, code with data processing running from RAM . . . 65
Table 32. Current consumption in Run mode vs code type, code with data processing running from RAM . . . 65
Table 33. Current consumption in Sleep mode . . . 66
Table 34. Current consumption in Low-power run mode . . . 67
Table 35. Current consumption in Low-power sleep mode . . . 68
Table 36. Typical and maximum current consumptions in Stop mode . . . 69
Table 37. Typical and maximum current consumptions in Standby mode . . . 70
Table 38. Average current consumption during Wakeup . . . 70
Table 39. Peripheral current consumption in Run or Sleep mode . . . 71
Table 40. Peripheral current consumption in Stop and Standby mode . . . 73
Table 41. Low-power mode wakeup timings . . . 73
Table 42. High-speed external user clock characteristics. . . . 75
Table 43. Low-speed external user clock characteristics . . . 76
Table 44. HSE oscillator characteristics . . . 77
Table 45. LSE oscillator characteristics . . . 78

Table 46. 16 MHz HSI16 oscillator characteristics . . . 79
Table 47. HSI48 oscillator characteristics . . . 80
Table 48. LSI oscillator characteristics . . . 80
Table 49. MSI oscillator characteristics . . . 80
Table 50. PLL characteristics . . . 82
Table 51. RAM and hardware registers . . . 83
Table 52. Flash memory and data EEPROM characteristics . . . 83
Table 53. Flash memory and data EEPROM endurance and retention . . . 83
Table 54. EMS characteristics . . . 84
Table 55. EMI characteristics . . . 85
Table 56. ESD absolute maximum ratings . . . 86
Table 57. Electrical sensitivities . . . 86
Table 58. I/O current injection susceptibility . . . 87
Table 59. I/O static characteristics . . . 88
Table 60. Output voltage characteristics . . . 90
Table 61. I/O AC characteristics . . . 91
Table 62. NRST pin characteristics . . . 92
Table 63. ADC characteristics . . . 93
Table 64. R_{AIN} max for f_{ADC} = 16 MHz . . . 95
Table 65. ADC accuracy . . . 95
Table 66. DAC characteristics . . . 99
Table 67. Temperature sensor calibration values . . . 102
Table 68. Temperature sensor characteristics . . . 102
Table 69. Comparator 1 characteristics . . . 102
Table 70. Comparator 2 characteristics . . . 103
Table 71. TIMx characteristics . . . 104
Table 72. I2C analog filter characteristics . . . 105
Table 73. SPI characteristics in voltage Range 1 . . . 105
Table 74. SPI characteristics in voltage Range 2 . . . 107
Table 75. SPI characteristics in voltage Range 3 . . . 108
Table 76. I2S characteristics . . . 111
Table 77. USB startup time . . . 113
Table 78. USB DC electrical characteristics . . . 113
Table 79. USB: full speed electrical characteristics . . . 114
Table 80. LQFP64 - 64-pin, 10 x 10 mm low-profile quad flat package mechanical data . . . 116
Table 81. TFBGA64 – 64-ball, 5 x 5 mm, 0.5 mm pitch thin profile fine pitch ball grid array package outline . . . 119
Table 82. TFBGA64 recommended PCB design rules (0.5 mm pitch BGA) . . . 120
Table 83. LQFP48 - 48-pin, 7 x 7 mm low-profile quad flat package mechanical data . . . 123
Table 84. UFQFPN48 - 48 leads, 7x7 mm, 0.5 mm pitch, ultra thin fine pitch quad flat package mechanical data . . . 126
Table 85. Standard WLCSP36 - 2.61 x 2.88 mm, 0.4 mm pitch wafer level chip scale mechanical data . . . 128
Table 86. Standard WLCSP36 recommended PCB design rules . . . 129
Table 87. Thin WLCSP36 - 2.61 x 2.88 mm, 0.4 mm pitch wafer level chip scale package mechanical data . . . 132
Table 88. WLCSP36 recommended PCB design rules . . . 133
Table 89. LQFP32 - 32-pin, 7 x 7 mm low-profile quad flat package mechanical data . . . 135
Table 90. UFQFPN32 - 32-pin, 5x5 mm, 0.5 mm pitch ultra thin fine pitch quad flat package mechanical data . . . 138
Table 91. Thermal characteristics . . . 140

Table 92. Document revision history 143

List of figures

Figure 1. STM32L052x6/8 block diagram . . . 14
Figure 2. Clock tree . . . 26
Figure 3. STM32L052x6/8 LQFP64 pinout . . . 38
Figure 4. STM32L052x6/8 TFBGA64 ballout . . . 39
Figure 5. STM32L052x6/8 LQFP48 pinout . . . 40
Figure 6. STM32L052x6/8 UFQFPN48 . . . 40
Figure 7. STM32L052x6/8 WLCSP36 ballout . . . 41
Figure 8. STM32L052x6/8 LQFP32 pinout . . . 41
Figure 9. STM32L052x6/8 UFQFPN32 pinout . . . 42
Figure 10. Pin loading conditions . . . 54
Figure 11. Pin input voltage . . . 54
Figure 12. Power supply scheme . . . 55
Figure 13. Current consumption measurement scheme . . . 55
Figure 14. IDD vs VDD, at TA= 25/55/85/105 °C, Run mode, code running from Flash memory, Range 2, HSE, 1WS . . . 64
Figure 15. IDD vs VDD, at TA= 25/55/85/105 °C, Run mode, code running from Flash memory, Range 2, HSI16, 1WS . . . 64
Figure 16. IDD vs VDD, at TA= 25/55/ 85/105/125 °C, Low-power run mode, code running from RAM, Range 3, MSI (Range 0) at 64 KHz, 0 WS . . . 68
Figure 17. IDD vs VDD, at TA= 25/55/ 85/105/125 °C, Stop mode with RTC enabled and running on LSE Low drive . . . 69
Figure 18. IDD vs VDD, at TA= 25/55/85/105/125 °C, Stop mode with RTC disabled, all clocks OFF . . . 69
Figure 19. High-speed external clock source AC timing diagram . . . 75
Figure 20. Low-speed external clock source AC timing diagram . . . 76
Figure 21. HSE oscillator circuit diagram . . . 77
Figure 22. Typical application with a 32.768 kHz crystal . . . 78
Figure 23. HSI16 minimum and maximum value versus temperature . . . 79
Figure 24. VIH/VIL versus VDD (CMOS I/Os) . . . 89
Figure 25. VIH/VIL versus VDD (TTL I/Os) . . . 89
Figure 26. I/O AC characteristics definition . . . 92
Figure 27. Recommended NRST pin protection . . . 93
Figure 28. ADC accuracy characteristics . . . 96
Figure 29. Typical connection diagram using the ADC . . . 97
Figure 30. Power supply and reference decoupling (V_{REF+} not connected to V_{DDA}) . . . 97
Figure 31. Power supply and reference decoupling (V_{REF+} connected to V_{DDA}) . . . 98
Figure 32. 12-bit buffered/non-buffered DAC . . . 101
Figure 33. SPI timing diagram - slave mode and CPHA = 0 . . . 109
Figure 34. SPI timing diagram - slave mode and CPHA = 1(1) . . . 109
Figure 35. SPI timing diagram - master mode(1) . . . 110
Figure 36. I^2S slave timing diagram (Philips protocol)(1) . . . 112
Figure 37. I^2S master timing diagram (Philips protocol)(1) . . . 112
Figure 38. USB timings: definition of data signal rise and fall time . . . 113
Figure 39. LQFP64 - 64-pin, 10 x 10 mm low-profile quad flat package outline . . . 115
Figure 40. LQFP64 - 64-pin, 10 x 10 mm low-profile quad flat recommended footprint . . . 117
Figure 41. LQFP64 marking example (package top view) . . . 118
Figure 42. TFBGA64 – 64-ball, 5 x 5 mm, 0.5 mm pitch thin profile fine pitch ball grid array package outline . . . 119

Figure 43. TFBGA64 – 64-ball, 5 x 5 mm, 0.5 mm pitch, thin profile fine pitch ball ,grid array recommended footprint . . . 120
Figure 44. TFBGA64 marking example (package top view) . . . 121
Figure 45. LQFP48 - 48-pin, 7 x 7 mm low-profile quad flat package outline . . . 122
Figure 46. LQFP48 - 48-pin, 7 x 7 mm low-profile quad flat recommended footprint . . . 123
Figure 47. LQFP48 marking example (package top view) . . . 124
Figure 48. UFQFPN48 - 48 leads, 7x7 mm, 0.5 mm pitch, ultra thin fine pitch quad flat package outline . . . 125
Figure 49. UFQFPN48 - 48 leads, 7x7 mm, 0.5 mm pitch, ultra thin fine pitch quad flat package recommended footprint . . . 126
Figure 50. UFQFPN48 marking example (package top view) . . . 127
Figure 51. Standard WLCSP36 - 2.61 x 2.88 mm, 0.4 mm pitch wafer level chip scale package outline . . . 128
Figure 52. Standard WLCSP36 - 2.61 x 2.88 mm, 0.4 mm pitch wafer level chip scale recommended footprint . . . 129
Figure 53. Standard WLCSP36 marking example (package top view) . . . 130
Figure 54. Thin WLCSP36 - 2.61 x 2.88 mm, 0.4 mm pitch wafer level chip scale package outline . . . 131
Figure 55. Thin WLCSP36 - 2.61 x 2.88 mm, 0.4 mm pitch wafer level chip scale package recommended footprint . . . 132
Figure 56. Standard WLCSP36 marking example (package top view) . . . 133
Figure 57. LQFP32 - 32-pin, 7 x 7 mm low-profile quad flat package outline . . . 134
Figure 58. LQFP32 - 32-pin, 7 x 7 mm low-profile quad flat recommended footprint . . . 135
Figure 59. LQFP32 marking example (package top view) . . . 136
Figure 60. UFQFPN32 - 32-pin, 5x5 mm, 0.5 mm pitch ultra thin fine pitch quad flat package outline . . . 137
Figure 61. UFQFPN32 - 32-pin, 5x5 mm, 0.5 mm pitch ultra thin fine pitch quad flat recommended footprint . . . 138
Figure 62. UFQFPN32 marking example (package top view) . . . 139
Figure 63. Thermal resistance . . . 141

1 Introduction

The ultra-low-power STM32L052x6/8 are offered in 8 different package types: from 32 pins to 64 pins. Depending on the device chosen, different sets of peripherals are included, the description below gives an overview of the complete range of peripherals proposed in this family.

These features make the ultra-low-power STM32L052x6/8 microcontrollers suitable for a wide range of applications:

- Gas/water meters and industrial sensors
- Healthcare and fitness equipment
- Remote control and user interface
- PC peripherals, gaming, GPS equipment
- Alarm system, wired and wireless sensors, video intercom

This STM32L052x6/8 datasheet should be read in conjunction with the STM32L0x2xx reference manual (RM0376).

For information on the Arm®(a) Cortex®-M0+ core please refer to the Cortex®-M0+ Technical Reference Manual, available from the www.arm.com website.

Figure 1 shows the general block diagram of the device family.

arm

a. Arm is a registered trademark of Arm Limited (or its subsidiaries) in the US and/or elsewhere.

2 Description

The ultra-low-power STM32L052x6/8 microcontrollers incorporate the connectivity power of the universal serial bus (USB 2.0 crystal-less) with the high-performance Arm Cortex-M0+ 32-bit RISC core operating at a 32 MHz frequency, a memory protection unit (MPU), high-speed embedded memories (64 Kbytes of Flash program memory, 2 Kbytes of data EEPROM and 8 Kbytes of RAM) plus an extensive range of enhanced I/Os and peripherals.

The STM32L052x6/8 devices provide high power efficiency for a wide range of performance. It is achieved with a large choice of internal and external clock sources, an internal voltage adaptation and several low-power modes.

The STM32L052x6/8 devices offer several analog features, one 12-bit ADC with hardware oversampling, one DAC, two ultra-low-power comparators, several timers, one low-power timer (LPTIM), three general-purpose 16-bit timers and one basic timer, one RTC and one SysTick which can be used as timebases. They also feature two watchdogs, one watchdog with independent clock and window capability and one window watchdog based on bus clock.

Moreover, the STM32L052x6/8 devices embed standard and advanced communication interfaces: up to two I2C, two SPIs, one I2S, two USARTs, a low-power UART (LPUART), and a crystal-less USB. The devices offer up to 24 capacitive sensing channels to simply add touch sensing functionality to any application.

The STM32L052x6/8 also include a real-time clock and a set of backup registers that remain powered in Standby mode.

The ultra-low-power STM32L052x6/8 devices operate from a 1.8 to 3.6 V power supply (down to 1.65 V at power down) with BOR and from a 1.65 to 3.6 V power supply without BOR option. They are available in the -40 to +125 °C temperature range. A comprehensive set of power-saving modes allows the design of low-power applications.

2.1 Device overview

Table 2. Ultra-low-power STM32L052x6/x8 device features and peripheral counts

Peripheral		STM32L052T6	STM32L052K6	STM32L052C6	STM32L052R6	STM32L052T8	STM32L052K8	STM32L052C8	STM32L052R8
Flash (Kbytes)		32				64			
Data EEPROM (Kbytes)		2				2			
RAM (Kbytes)		8				8			
Timers	General-purpose	3				3			
	Basic	1				1			
	LPTIMER	1				1			
RTC/SYSTICK/IWDG/ WWDG		1/1/1/1				1/1/1/1			
Communication interfaces	SPI/I2S	3(2)[1]/0		4(2)[1]/1		3(2)[1]/0		4(2)[1]/1	
	I^2C	2	1	2		2	1	2	
	USART	2				2			
	LPUART	1	0	1		1	0	1	
	USB/ (VDD_USB)	1/(0)		1/(1)		1/(0)		1/(1)	
GPIOs		29	27[2]	37	51[3]	29	27[2]	37	51[3]
Clocks: HSE/LSE/HSI/MSI/LSI		0/1/1/1/1	0/1/1/1/1	1/1/1/1/1	1/1/1/1/1	0/1/1/1/1	0/1/1/1/1	1/1/1/1/1	1/1/1/1/1
12-bit synchronized ADC Number of channels		1 10	1 10	1 10	1 16[3]	1 10	1 10	1 10	1 16[3]
12-bit DAC Number of channels		1 1				1 1			
Comparators		2							
Capacitive sensing channels		14		17	24[3]	14		17	24[3]
Max. CPU frequency		32 MHz							
Operating voltage		1.8 V to 3.6 V (down to 1.65 V at power-down) with BOR option 1.65 V to 3.6 V without BOR option							

Table 2. Ultra-low-power STM32L052x6/x8 device features and peripheral counts (continued)

Peripheral	STM32L052T6	STM32L052K6	STM32L052C6	STM32L052R6	STM32L052T8	STM32L052K8	STM32L052C8	STM32L052R8
Operating temperatures	Ambient temperature: –40 to +125 °C Junction temperature: –40 to +130 °C							
Packages	WLCSP36	LQFP32, UFQFPN32	LQFP48 UFQFPN48	LQFP64 TFBGA64	WLCSP36	LQFP32, UFQFPN32	LQFP48 UFQFPN48	LQFP64 TFBGA64

1. 2 SPI interfaces are USARTs operating in SPI master mode.
2. LQFP32 has two GPIOs, less than UFQFPN32 (27).
3. TFBGA64 has one GPIO, one ADC input and one capacitive sensing channel less than LQFP64.

Figure 1. STM32L052x6/8 block diagram

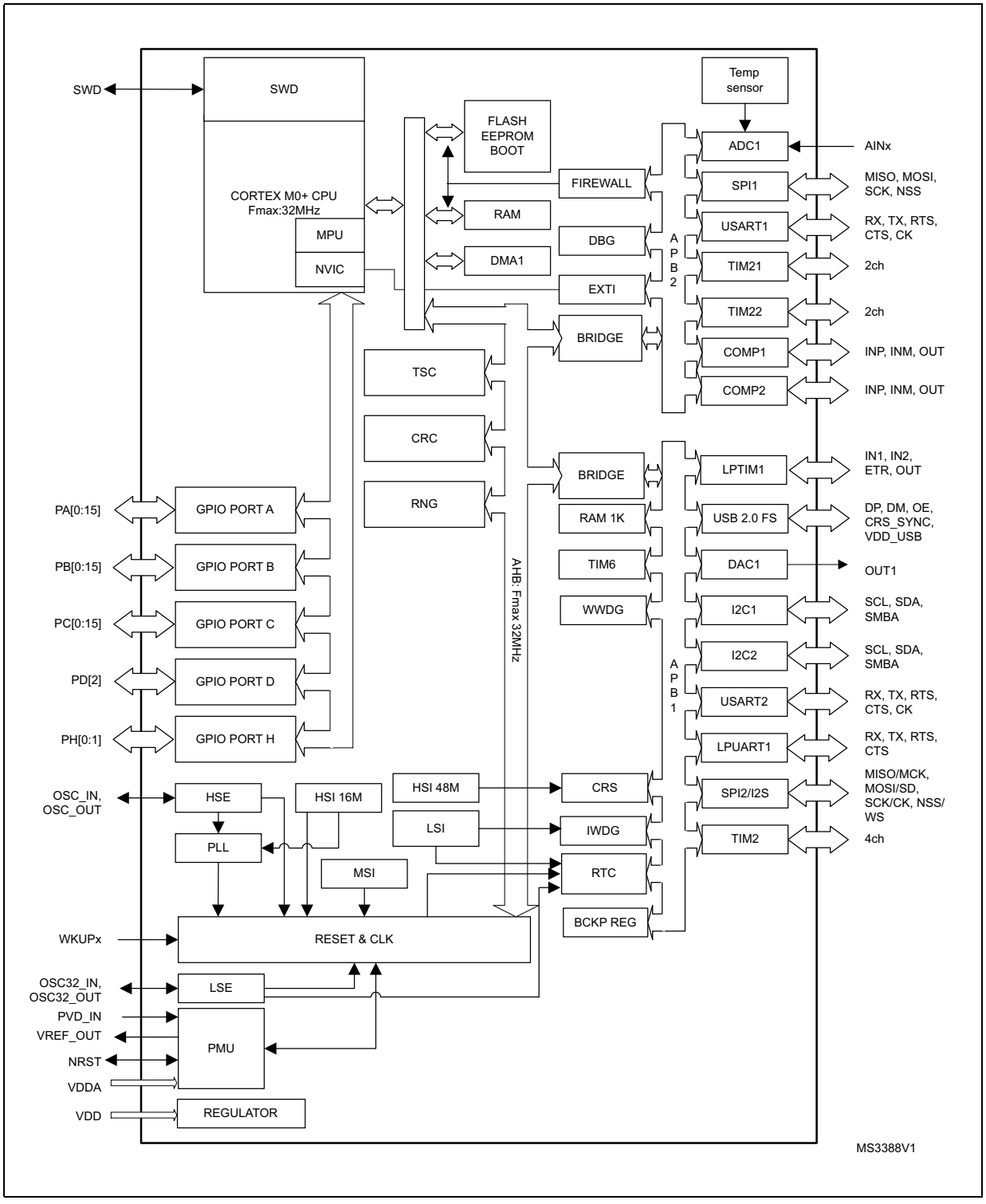

2.2 Ultra-low-power device continuum

The ultra-low-power family offers a large choice of core and features, from 8-bit proprietary core up to Arm® Cortex®-M4, including Arm® Cortex®-M3 and Arm® Cortex®-M0+. The STM32Lx series are the best choice to answer your needs in terms of ultra-low-power features. The STM32 ultra-low-power series are the best solution for applications such as gaz/water meter, keyboard/mouse or fitness and healthcare application. Several built-in features like LCD drivers, dual-bank memory, low-power run mode, operational amplifiers, 128-bit AES, DAC, crystal-less USB and many other definitely help you building a highly cost optimized application by reducing BOM cost. STMicroelectronics, as a reliable and long-term manufacturer, ensures as much as possible pin-to-pin compatibility between all STM8Lx and STM32Lx on one hand, and between all STM32Lx and STM32Fx on the other hand. Thanks to this unprecedented scalability, your legacy application can be upgraded to respond to the latest market feature and efficiency requirements.

3 Functional overview

3.1 Low-power modes

The ultra-low-power STM32L052x6/8 support dynamic voltage scaling to optimize its power consumption in Run mode. The voltage from the internal low-drop regulator that supplies the logic can be adjusted according to the system's maximum operating frequency and the external voltage supply.

There are three power consumption ranges:

- Range 1 (V_{DD} range limited to 1.71-3.6 V), with the CPU running at up to 32 MHz
- Range 2 (full V_{DD} range), with a maximum CPU frequency of 16 MHz
- Range 3 (full V_{DD} range), with a maximum CPU frequency limited to 4.2 MHz

Seven low-power modes are provided to achieve the best compromise between low-power consumption, short startup time and available wakeup sources:

- **Sleep mode**

  In Sleep mode, only the CPU is stopped. All peripherals continue to operate and can wake up the CPU when an interrupt/event occurs. Sleep mode power consumption at 16 MHz is about 1 mA with all peripherals off.

- **Low-power run mode**

  This mode is achieved with the multispeed internal (MSI) RC oscillator set to the low-speed clock (max 131 kHz), execution from SRAM or Flash memory, and internal regulator in low-power mode to minimize the regulator's operating current. In Low-power run mode, the clock frequency and the number of enabled peripherals are both limited.

- **Low-power sleep mode**

  This mode is achieved by entering Sleep mode with the internal voltage regulator in low-power mode to minimize the regulator's operating current. In Low-power sleep mode, both the clock frequency and the number of enabled peripherals are limited; a typical example would be to have a timer running at 32 kHz.

  When wakeup is triggered by an event or an interrupt, the system reverts to the Run mode with the regulator on.

  Stop mode with RTC

  The Stop mode achieves the lowest power consumption while retaining the RAM and register contents and real time clock. All clocks in the V_{CORE} domain are stopped, the PLL, MSI RC, HSE crystal and HSI RC oscillators are disabled. The LSE or LSI is still running. The voltage regulator is in the low-power mode.

  Some peripherals featuring wakeup capability can enable the HSI RC during Stop mode to detect their wakeup condition.

  The device can be woken up from Stop mode by any of the EXTI line, in 3.5 µs, the processor can serve the interrupt or resume the code. The EXTI line source can be any GPIO. It can be the PVD output, the comparator 1 event or comparator 2 event (if internal reference voltage is on), it can be the RTC alarm/tamper/timestamp/wakeup events, the USB/USART/I2C/LPUART/LPTIMER wakeup events.

- **Stop mode without RTC**

  The Stop mode achieves the lowest power consumption while retaining the RAM and register contents. All clocks are stopped, the PLL, MSI RC, HSI and LSI RC, HSE and LSE crystal oscillators are disabled.

  Some peripherals featuring wakeup capability can enable the HSI RC during Stop mode to detect their wakeup condition.

  The voltage regulator is in the low-power mode. The device can be woken up from Stop mode by any of the EXTI line, in 3.5 µs, the processor can serve the interrupt or resume the code. The EXTI line source can be any GPIO. It can be the PVD output, the comparator 1 event or comparator 2 event (if internal reference voltage is on). It can also be wakened by the USB/USART/I2C/LPUART/LPTIMER wakeup events.

- **Standby mode with RTC**

  The Standby mode is used to achieve the lowest power consumption and real time clock. The internal voltage regulator is switched off so that the entire V_{CORE} domain is powered off. The PLL, MSI RC, HSE crystal and HSI RC oscillators are also switched off. The LSE or LSI is still running. After entering Standby mode, the RAM and register contents are lost except for registers in the Standby circuitry (wakeup logic, IWDG, RTC, LSI, LSE Crystal 32 KHz oscillator, RCC_CSR register).

  The device exits Standby mode in 60 µs when an external reset (NRST pin), an IWDG reset, a rising edge on one of the three WKUP pins, RTC alarm (Alarm A or Alarm B), RTC tamper event, RTC timestamp event or RTC Wakeup event occurs.

- **Standby mode without RTC**

  The Standby mode is used to achieve the lowest power consumption. The internal voltage regulator is switched off so that the entire V_{CORE} domain is powered off. The PLL, MSI RC, HSI and LSI RC, HSE and LSE crystal oscillators are also switched off. After entering Standby mode, the RAM and register contents are lost except for registers in the Standby circuitry (wakeup logic, IWDG, RTC, LSI, LSE Crystal 32 KHz oscillator, RCC_CSR register).

  The device exits Standby mode in 60 µs when an external reset (NRST pin) or a rising edge on one of the three WKUP pin occurs.

Note: The RTC, the IWDG, and the corresponding clock sources are not stopped automatically by entering Stop or Standby mode.

Table 3. Functionalities depending on the operating power supply range

Operating power supply range(1)	Functionalities depending on the operating power supply range		
	DAC and ADC operation	Dynamic voltage scaling range	USB
V_{DD} = 1.65 to 1.71 V	ADC only, conversion time up to 570 ksps	Range 2 or range 3	Not functional
V_{DD} = 1.71 to 1.8 V(2)	ADC only, conversion time up to 1.14 Msps	Range 1, range 2 or range 3	Functional(3)
V_{DD} = 1.8 to 2.0 V(2)	Conversion time up to 1.14 Msps	Range1, range 2 or range 3	Functional(3)
V_{DD} = 2.0 to 2.4 V	Conversion time up to 1.14 Msps	Range 1, range 2 or range 3	Functional(3)
V_{DD} = 2.4 to 3.6 V	Conversion time up to 1.14 Msps	Range 1, range 2 or range 3	Functional(3)

1. GPIO speed depends on V_{DD} voltage range. Refer to *Table 61: I/O AC characteristics* for more information about I/O speed.
2. CPU frequency changes from initial to final must respect "fcpu initial <4*fcpu final". It must also respect 5 µs delay between two changes. For example to switch from 4.2 MHz to 32 MHz, you can switch from 4.2 MHz to 16 MHz, wait 5 µs, then switch from 16 MHz to 32 MHz.
3. To be USB compliant from the I/O voltage standpoint, the minimum V_{DD_USB} is 3.0 V.

Table 4. CPU frequency range depending on dynamic voltage scaling

CPU frequency range	Dynamic voltage scaling range
16 MHz to 32 MHz (1ws) 32 kHz to 16 MHz (0ws)	Range 1
8 MHz to 16 MHz (1ws) 32 kHz to 8 MHz (0ws)	Range 2
32 kHz to 4.2 MHz (0ws)	Range 3

Table 5. Functionalities depending on the working mode (from Run/active down to standby) (1)

IPs	Run/Active	Sleep	Low-power run	Low-power sleep	Stop		Standby	
						Wakeup capability		Wakeup capability
CPU	Y	--	Y	--	--		--	
Flash memory	O	O	O	O	--		--	
RAM	Y	Y	Y	Y	Y		--	
Backup registers	Y	Y	Y	Y	Y		Y	
EEPROM	O	O	O	O	--		--	
Brown-out reset (BOR)	O	O	O	O	O	O	O	O
DMA	O	O	O	O	--		--	
Programmable Voltage Detector (PVD)	O	O	O	O	O	O	-	
Power-on/down reset (POR/PDR)	Y	Y	Y	Y	Y	Y	Y	Y
High Speed Internal (HSI)	O	O	--	--	(2)		--	
High Speed External (HSE)	O	O	O	O	--		--	
Low Speed Internal (LSI)	O	O	O	O	O		O	
Low Speed External (LSE)	O	O	O	O	O		O	
Multi-Speed Internal (MSI)	O	O	Y	Y	--		--	
Inter-Connect Controller	Y	Y	Y	Y	Y		--	
RTC	O	O	O	O	O	O	O	
RTC Tamper	O	O	O	O	O	O	O	O
Auto WakeUp (AWU)	O	O	O	O	O	O	O	O
USB	O	O	--	--	--	O	--	
USART	O	O	O	O	O(3)	O	--	
LPUART	O	O	O	O	O(3)	O	--	
SPI	O	O	O	O	--		--	
I2C	O	O	--	--	O(4)	O	--	
ADC	O	O	--	--	--		--	
DAC	O	O	O	O	O		--	

Table 5. Functionalities depending on the working mode (from Run/active down to standby) (continued)(1)

IPs	Run/Active	Sleep	Low-power run	Low-power sleep	Stop		Standby	
						Wakeup capability		Wakeup capability
Temperature sensor	O	O	O	O	O		--	
Comparators	O	O	O	O	O	O	--	
16-bit timers	O	O	O	O	--		--	
LPTIMER	O	O	O	O	O	O		
IWDG	O	O	O	O	O	O	O	O
WWDG	O	O	O	O	--		--	
Touch sensing controller (TSC)	O	O	--	--	--		--	
SysTick Timer	O	O	O	O			--	
GPIOs	O	O	O	O	O	O		2 pins
Wakeup time to Run mode	0 µs	0.36 µs	3 µs	32 µs	3.5 µs		50 µs	
Consumption V_{DD}=1.8 to 3.6 V (Typ)	Down to 140 µA/MHz (from Flash memory)	Down to 37 µA/MHz (from Flash memory)	Down to 8 µA	Down to 4.5 µA	0.4 µA (No RTC) V_{DD}=1.8 V		0.28 µA (No RTC) V_{DD}=1.8 V	
					0.8 µA (with RTC) V_{DD}=1.8 V		0.65 µA (with RTC) V_{DD}=1.8 V	
					0.4 µA (No RTC) V_{DD}=3.0 V		0.29 µA (No RTC) V_{DD}=3.0 V	
					1 µA (with RTC) V_{DD}=3.0 V		0.85 µA (with RTC) V_{DD}=3.0 V	

1. Legend:
   “Y” = Yes (enable).
   “O” = Optional can be enabled/disabled by software)
   “-” = Not available
2. Some peripherals with wakeup from Stop capability can request HSI to be enabled. In this case, HSI is woken up by the peripheral, and only feeds the peripheral which requested it. HSI is automatically put off when the peripheral does not need it anymore.
3. UART and LPUART reception is functional in Stop mode. It generates a wakeup interrupt on Start. To generate a wakeup on address match or received frame event, the LPUART can run on LSE clock while the UART has to wake up or keep running the HSI clock.
4. I2C address detection is functional in Stop mode. It generates a wakeup interrupt in case of address match. It will wake up the HSI during reception.

3.2 Interconnect matrix

Several peripherals are directly interconnected. This allows autonomous communication between peripherals, thus saving CPU resources and power consumption. In addition, these hardware connections allow fast and predictable latency.

Depending on peripherals, these interconnections can operate in Run, Sleep, Low-power run, Low-power sleep and Stop modes.

Table 6. STM32L052x6/8 peripherals interconnect matrix

Interconnect source	Interconnect destination	Interconnect action	Run	Sleep	Low-power run	Low-power sleep	Stop
COMPx	TIM2,TIM21, TIM22	Timer input channel, trigger from analog signals comparison	Y	Y	Y	Y	-
	LPTIM	Timer input channel, trigger from analog signals comparison	Y	Y	Y	Y	Y
TIMx	TIMx	Timer triggered by other timer	Y	Y	Y	Y	-
RTC	TIM21	Timer triggered by Auto wake-up	Y	Y	Y	Y	-
	LPTIM	Timer triggered by RTC event	Y	Y	Y	Y	Y
All clock source	TIMx	Clock source used as input channel for RC measurement and trimming	Y	Y	Y	Y	-
USB	CRS/HSI48	the clock recovery system trims the HSI48 based on USB SOF	Y	Y	-	-	-
GPIO	TIMx	Timer input channel and trigger	Y	Y	Y	Y	-
	LPTIM	Timer input channel and trigger	Y	Y	Y	Y	Y
	ADC,DAC	Conversion trigger	Y	Y	Y	Y	-

3.3 Arm® Cortex®-M0+ core with MPU

The Cortex-M0+ processor is an entry-level 32-bit Arm Cortex processor designed for a broad range of embedded applications. It offers significant benefits to developers, including:

- a simple architecture that is easy to learn and program
- ultra-low power, energy-efficient operation
- excellent code density
- deterministic, high-performance interrupt handling
- upward compatibility with Cortex-M processor family
- platform security robustness, with integrated Memory Protection Unit (MPU).

The Cortex-M0+ processor is built on a highly area and power optimized 32-bit processor core, with a 2-stage pipeline Von Neumann architecture. The processor delivers exceptional energy efficiency through a small but powerful instruction set and extensively optimized design, providing high-end processing hardware including a single-cycle multiplier.

The Cortex-M0+ processor provides the exceptional performance expected of a modern 32-bit architecture, with a higher code density than other 8-bit and 16-bit microcontrollers.

Owing to its embedded Arm core, the STM32L052x6/8 are compatible with all Arm tools and software.

Nested vectored interrupt controller (NVIC)

The ultra-low-power STM32L052x6/8 embed a nested vectored interrupt controller able to handle up to 32 maskable interrupt channels and 4 priority levels.

The Cortex-M0+ processor closely integrates a configurable Nested Vectored Interrupt Controller (NVIC), to deliver industry-leading interrupt performance. The NVIC:

- includes a Non-Maskable Interrupt (NMI)
- provides zero jitter interrupt option
- provides four interrupt priority levels

The tight integration of the processor core and NVIC provides fast execution of Interrupt Service Routines (ISRs), dramatically reducing the interrupt latency. This is achieved through the hardware stacking of registers, and the ability to abandon and restart load-multiple and store-multiple operations. Interrupt handlers do not require any assembler wrapper code, removing any code overhead from the ISRs. Tail-chaining optimization also significantly reduces the overhead when switching from one ISR to another.

To optimize low-power designs, the NVIC integrates with the sleep modes, that include a deep sleep function that enables the entire device to enter rapidly stop or standby mode.

This hardware block provides flexible interrupt management features with minimal interrupt latency.

3.4 Reset and supply management

3.4.1 Power supply schemes

- V_{DD} = 1.65 to 3.6 V: external power supply for I/Os and the internal regulator. Provided externally through V_{DD} pins.
- V_{SSA}, V_{DDA} = 1.65 to 3.6 V: external analog power supplies for ADC, DAC, reset blocks, RCs and PLL (minimum voltage to be applied to V_{DDA} is 1.8 V when the DAC is used). V_{DDA} and V_{SSA} must be connected to V_{DD} and V_{SS}, respectively.
- V_{DD_USB} = 1.65 to 3.6V: external power supply for USB transceiver, USB_DM (PA11) and USB_DP (PA12). To guarantee a correct voltage level for USB communication V_{DD_USB} must be above 3.0V. If USB is not used this pin must be tied to V_{DD} or V_{SS}. On packages without VDD_USB pin, V_{DD_USB} voltage is internally connected to V_{DD} voltage.

3.4.2 Power supply supervisor

The devices have an integrated ZEROPOWER power-on reset (POR)/power-down reset (PDR) that can be coupled with a brownout reset (BOR) circuitry.

Two versions are available:

- The version with BOR activated at power-on operates between 1.8 V and 3.6 V.
- The other version without BOR operates between 1.65 V and 3.6 V.

After the V_{DD} threshold is reached (1.65 V or 1.8 V depending on the BOR which is active or not at power-on), the option byte loading process starts, either to confirm or modify default thresholds, or to disable the BOR permanently: in this case, the VDD min value becomes 1.65 V (whatever the version, BOR active or not, at power-on).

When BOR is active at power-on, it ensures proper operation starting from 1.8 V whatever the power ramp-up phase before it reaches 1.8 V. When BOR is not active at power-up, the power ramp-up should guarantee that 1.65 V is reached on V_{DD} at least 1 ms after it exits the POR area.

Five BOR thresholds are available through option bytes, starting from 1.8 V to 3 V. To reduce the power consumption in Stop mode, it is possible to automatically switch off the internal reference voltage (V_{REFINT}) in Stop mode. The device remains in reset mode when V_{DD} is below a specified threshold, $V_{POR/PDR}$ or V_{BOR}, without the need for any external reset circuit.

Note: The start-up time at power-on is typically 3.3 ms when BOR is active at power-up, the start-up time at power-on can be decreased down to 1 ms typically for devices with BOR inactive at power-up.

The devices feature an embedded programmable voltage detector (PVD) that monitors the $V_{DD/VDDA}$ power supply and compares it to the V_{PVD} threshold. This PVD offers 7 different levels between 1.85 V and 3.05 V, chosen by software, with a step around 200 mV. An interrupt can be generated when $V_{DD/VDDA}$ drops below the V_{PVD} threshold and/or when $V_{DD/VDDA}$ is higher than the V_{PVD} threshold. The interrupt service routine can then generate a warning message and/or put the MCU into a safe state. The PVD is enabled by software.

3.4.3 Voltage regulator

The regulator has three operation modes: main (MR), low power (LPR) and power down.

- MR is used in Run mode (nominal regulation)
- LPR is used in the Low-power run, Low-power sleep and Stop modes
- Power down is used in Standby mode. The regulator output is high impedance, the kernel circuitry is powered down, inducing zero consumption but the contents of the registers and RAM are lost except for the standby circuitry (wakeup logic, IWDG, RTC, LSI, LSE crystal 32 KHz oscillator, RCC_CSR).

3.5 Clock management

The clock controller distributes the clocks coming from different oscillators to the core and the peripherals. It also manages clock gating for low-power modes and ensures clock robustness. It features:

- **Clock prescaler**

  To get the best trade-off between speed and current consumption, the clock frequency to the CPU and peripherals can be adjusted by a programmable prescaler.
- **Safe clock switching**

  Clock sources can be changed safely on the fly in Run mode through a configuration register.
- **Clock management**

  To reduce power consumption, the clock controller can stop the clock to the core, individual peripherals or memory.
- **System clock source**

  Three different clock sources can be used to drive the master clock SYSCLK:
  - 1-25 MHz high-speed external crystal (HSE), that can supply a PLL
  - 16 MHz high-speed internal RC oscillator (HSI), trimmable by software, that can supply a PLLMultispeed internal RC oscillator (MSI), trimmable by software, able to generate 7 frequencies (65 kHz, 131 kHz, 262 kHz, 524 kHz, 1.05 MHz, 2.1 MHz, 4.2 MHz). When a 32.768 kHz clock source is available in the system (LSE), the MSI frequency can be trimmed by software down to a ±0.5% accuracy.
- **Auxiliary clock source**

  Two ultra-low-power clock sources that can be used to drive the real-time clock:
  - 32.768 kHz low-speed external crystal (LSE)
  - 37 kHz low-speed internal RC (LSI), also used to drive the independent watchdog. The LSI clock can be measured using the high-speed internal RC oscillator for greater precision.
- **RTC clock source**

  The LSI, LSE or HSE sources can be chosen to clock the RTC, whatever the system clock.
- **USB clock source**

  A 48 MHz clock trimmed through the USB SOF supplies the USB interface.

- **Startup clock**

  After reset, the microcontroller restarts by default with an internal 2 MHz clock (MSI). The prescaler ratio and clock source can be changed by the application program as soon as the code execution starts.

- **Clock security system (CSS)**

  This feature can be enabled by software. If an HSE clock failure occurs, the master clock is automatically switched to HSI and a software interrupt is generated if enabled.

  Another clock security system can be enabled, in case of failure of the LSE it provides an interrupt or wakeup event which is generated if enabled.

- **Clock-out capability (MCO: microcontroller clock output)**

  It outputs one of the internal clocks for external use by the application.

Several prescalers allow the configuration of the AHB frequency, each APB (APB1 and APB2) domains. The maximum frequency of the AHB and the APB domains is 32 MHz. See *Figure 2* for details on the clock tree.

Figure 2. Clock tree

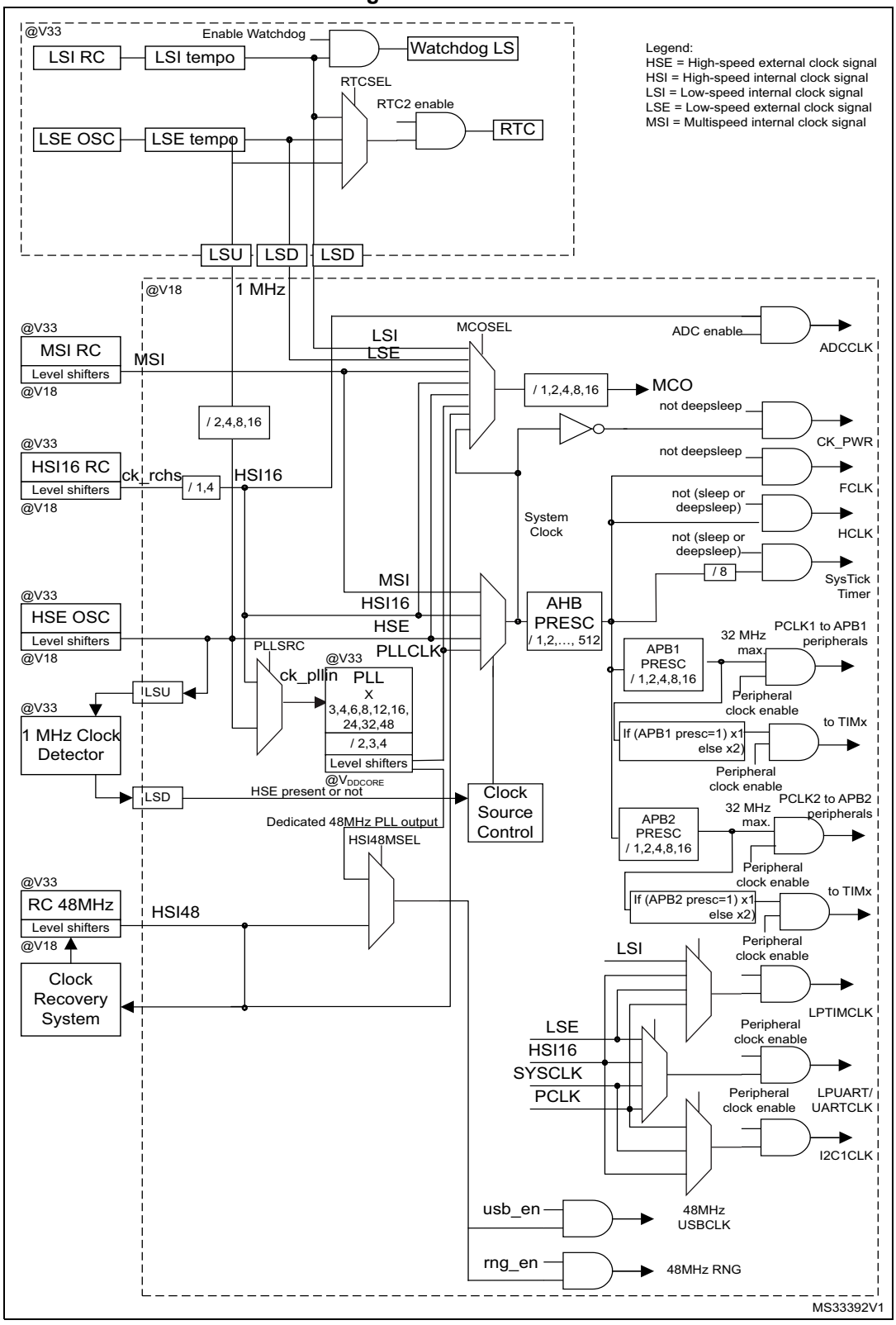

3.6 Low-power real-time clock and backup registers

The real time clock (RTC) and the 5 backup registers are supplied in all modes including standby mode. The backup registers are five 32-bit registers used to store 20 bytes of user application data. They are not reset by a system reset, or when the device wakes up from Standby mode.

The RTC is an independent BCD timer/counter. Its main features are the following:

- Calendar with subsecond, seconds, minutes, hours (12 or 24 format), week day, date, month, year, in BCD (binary-coded decimal) format
- Automatically correction for 28, 29 (leap year), 30, and 31 day of the month
- Two programmable alarms with wake up from Stop and Standby mode capability
- Periodic wakeup from Stop and Standby with programmable resolution and period
- On-the-fly correction from 1 to 32767 RTC clock pulses. This can be used to synchronize it with a master clock.
- Reference clock detection: a more precise second source clock (50 or 60 Hz) can be used to enhance the calendar precision.
- Digital calibration circuit with 1 ppm resolution, to compensate for quartz crystal inaccuracy
- 2 anti-tamper detection pins with programmable filter. The MCU can be woken up from Stop and Standby modes on tamper event detection.
- Timestamp feature which can be used to save the calendar content. This function can be triggered by an event on the timestamp pin, or by a tamper event. The MCU can be woken up from Stop and Standby modes on timestamp event detection.

The RTC clock sources can be:

- A 32.768 kHz external crystal
- A resonator or oscillator
- The internal low-power RC oscillator (typical frequency of 37 kHz)
- The high-speed external clock

3.7 General-purpose inputs/outputs (GPIOs)

Each of the GPIO pins can be configured by software as output (push-pull or open-drain), as input (with or without pull-up or pull-down) or as peripheral alternate function. Most of the GPIO pins are shared with digital or analog alternate functions, and can be individually remapped using dedicated alternate function registers. All GPIOs are high current capable. Each GPIO output, speed can be slowed (40 MHz, 10 MHz, 2 MHz, 400 kHz). The alternate function configuration of I/Os can be locked if needed following a specific sequence in order to avoid spurious writing to the I/O registers. The I/O controller is connected to a dedicated IO bus with a toggling speed of up to 32 MHz.

Extended interrupt/event controller (EXTI)

The extended interrupt/event controller consists of 28 edge detector lines used to generate interrupt/event requests. Each line can be individually configured to select the trigger event (rising edge, falling edge, both) and can be masked independently. A pending register maintains the status of the interrupt requests. The EXTI can detect an external line with a pulse width shorter than the Internal APB2 clock period. Up to 51 GPIOs can be connected to the 16 configurable interrupt/event lines. The 12 other lines are connected to PVD, RTC, USB, USARTs, LPUART, LPTIMER or comparator events.

3.8 Memories

The STM32L052x6/8 devices have the following features:

- 8 Kbytes of embedded SRAM accessed (read/write) at CPU clock speed with 0 wait states. With the enhanced bus matrix, operating the RAM does not lead to any performance penalty during accesses to the system bus (AHB and APB buses).
- The non-volatile memory is divided into three arrays:
  - 32 or 64 Kbytes of embedded Flash program memory
  - 2 Kbytes of data EEPROM
  - Information block containing 32 user and factory options bytes plus 4 Kbytes of system memory

The user options bytes are used to write-protect or read-out protect the memory (with 4 Kbyte granularity) and/or readout-protect the whole memory with the following options:

- **Level 0**: no protection
- **Level 1**: memory readout protected.

  The Flash memory cannot be read from or written to if either debug features are connected or boot in RAM is selected
- **Level 2**: chip readout protected, debug features (Cortex-M0+ serial wire) and boot in RAM selection disabled (debugline fuse)

The firewall protects parts of code/data from access by the rest of the code that is executed outside of the protected area. The granularity of the protected code segment or the non-volatile data segment is 256 bytes (Flash memory or EEPROM) against 64 bytes for the volatile data segment (RAM).

The whole non-volatile memory embeds the error correction code (ECC) feature.

3.9 Boot modes

At startup, BOOT0 pin and nBOOT1 option bit are used to select one of three boot options:

- Boot from Flash memory
- Boot from System memory
- Boot from embedded RAM

The boot loader is located in System memory. It is used to reprogram the Flash memory by using SPI1(PA4, PA5, PA6, PA7) or SPI2 (PB12, PB13, PB14, PB15), USART1(PA9, PA10) or USART2(PA2, PA3). See STM32 microcontroller system memory boot mode AN2606 for details.

3.10 Direct memory access (DMA)

The flexible 7-channel, general-purpose DMA is able to manage memory-to-memory, peripheral-to-memory and memory-to-peripheral transfers. The DMA controller supports circular buffer management, avoiding the generation of interrupts when the controller reaches the end of the buffer.

Each channel is connected to dedicated hardware DMA requests, with software trigger support for each channel. Configuration is done by software and transfer sizes between source and destination are independent.

The DMA can be used with the main peripherals: SPI, I^2C, USART, LPUART, general-purpose timers, DAC, and ADC.

3.11 Analog-to-digital converter (ADC)

A native 12-bit, extended to 16-bit through hardware oversampling, analog-to-digital converter is embedded into STM32L052x6/8 device. It has up to 16 external channels and 3 internal channels (temperature sensor, voltage reference). Three channels, PA0, PA4 and PA5, are fast channels, while the others are standard channels.

The ADC performs conversions in single-shot or scan mode. In scan mode, automatic conversion is performed on a selected group of analog inputs.

The ADC frequency is independent from the CPU frequency, allowing maximum sampling rate of 1.14 MSPS even with a low CPU speed. The ADC consumption is low at all frequencies (~25 µA at 10 kSPS, ~200 µA at 1MSPS). An auto-shutdown function guarantees that the ADC is powered off except during the active conversion phase.

The ADC can be served by the DMA controller. It can operate from a supply voltage down to 1.65 V.

The ADC features a hardware oversampler up to 256 samples, this improves the resolution to 16 bits (see AN2668).

An analog watchdog feature allows very precise monitoring of the converted voltage of one, some or all scanned channels. An interrupt is generated when the converted voltage is outside the programmed thresholds.

The events generated by the general-purpose timers (TIMx) can be internally connected to the ADC start triggers, to allow the application to synchronize A/D conversions and timers.

3.12 Temperature sensor

The temperature sensor (T_{SENSE}) generates a voltage V_{SENSE} that varies linearly with temperature.

The temperature sensor is internally connected to the ADC_IN18 input channel which is used to convert the sensor output voltage into a digital value.

The sensor provides good linearity but it has to be calibrated to obtain good overall accuracy of the temperature measurement. As the offset of the temperature sensor varies from chip to chip due to process variation, the uncalibrated internal temperature sensor is suitable for applications that detect temperature changes only.

To improve the accuracy of the temperature sensor measurement, each device is individually factory-calibrated by ST. The temperature sensor factory calibration data are stored by ST in the system memory area, accessible in read-only mode.

Table 7. Temperature sensor calibration values

Calibration value name	Description	Memory address
TSENSE_CAL1	TS ADC raw data acquired at temperature of 30 °C, V_{DDA}= 3 V	0x1FF8 007A - 0x1FF8 007B
TSENSE_CAL2	TS ADC raw data acquired at temperature of 130 °C V_{DDA}= 3 V	0x1FF8 007E - 0x1FF8 007F

3.12.1 Internal voltage reference (V_{REFINT})

The internal voltage reference (V_{REFINT}) provides a stable (bandgap) voltage output for the ADC and Comparators. V_{REFINT} is internally connected to the ADC_IN17 input channel. It enables accurate monitoring of the V_{DD} value (when no external voltage, V_{REF+}, is available for ADC). The precise voltage of V_{REFINT} is individually measured for each part by ST during production test and stored in the system memory area. It is accessible in read-only mode.

Table 8. Internal voltage reference measured values

Calibration value name	Description	Memory address
VREFINT_CAL	Raw data acquired at temperature of 25 °C V_{DDA} = 3 V	0x1FF8 0078 - 0x1FF8 0079

3.13 Digital-to-analog converter (DAC)

One 12-bit buffered DAC can be used to convert digital signal into analog voltage signal output. An optional amplifier can be used to reduce the output signal impedance.

This digital Interface supports the following features:

- One data holding register
- Left or right data alignment in 12-bit mode
- Synchronized update capability
- Noise-wave generation
- Triangular-wave generation
- DMA capability (including the underrun interrupt)
- External triggers for conversion
- Input reference voltage V_{REF+}

Four DAC trigger inputs are used in the STM32L052x6/8. The DAC channel is triggered through the timer update outputs that are also connected to different DMA channels.

3.14 Ultra-low-power comparators and reference voltage

The STM32L052x6/8 embed two comparators sharing the same current bias and reference voltage. The reference voltage can be internal or external (coming from an I/O).

- One comparator with ultra low consumption
- One comparator with rail-to-rail inputs, fast or slow mode.
- The threshold can be one of the following:
  - DAC output
  - External I/O pins
  - Internal reference voltage (V_{REFINT})
  - submultiple of Internal reference voltage(1/4, 1/2, 3/4) for the rail to rail comparator.

Both comparators can wake up the devices from Stop mode, and be combined into a window comparator.

The internal reference voltage is available externally via a low-power / low-current output buffer (driving current capability of 1 µA typical).

3.15 System configuration controller

The system configuration controller provides the capability to remap some alternate functions on different I/O ports.

The highly flexible routing interface allows the application firmware to control the routing of different I/Os to the TIM2, TIM21, TIM22 and LPTIM timer input captures. It also controls the routing of internal analog signals to the USB internal oscillator, ADC, COMP1 and COMP2 and the internal reference voltage V_{REFINT}.

3.16 Touch sensing controller (TSC)

The STM32L052x6/8 provide a simple solution for adding capacitive sensing functionality to any application. These devices offer up to 24 capacitive sensing channels distributed over 8 analog I/O groups.

Capacitive sensing technology is able to detect the presence of a finger near a sensor which is protected from direct touch by a dielectric (such as glass, plastic). The capacitive variation introduced by the finger (or any conductive object) is measured using a proven implementation based on a surface charge transfer acquisition principle. It consists of charging the sensor capacitance and then transferring a part of the accumulated charges into a sampling capacitor until the voltage across this capacitor has reached a specific threshold. To limit the CPU bandwidth usage, this acquisition is directly managed by the hardware touch sensing controller and only requires few external components to operate.

The touch sensing controller is fully supported by the STMTouch touch sensing firmware library, which is free to use and allows touch sensing functionality to be implemented reliably in the end application.

Table 9. Capacitive sensing GPIOs available on STM32L052x6/8 devices

Group	Capacitive sensing signal name	Pin name	Group	Capacitive sensing signal name	Pin name
1	TSC_G1_IO1	PA0	5	TSC_G5_IO1	PB3
	TSC_G1_IO2	PA1		TSC_G5_IO2	PB4
	TSC_G1_IO3	PA2		TSC_G5_IO3	PB6
	TSC_G1_IO4	PA3		TSC_G5_IO4	PB7
2	TSC_G2_IO1	PA4(1)	6	TSC_G6_IO1	PB11
	TSC_G2_IO2	PA5		TSC_G6_IO2	PB12
	TSC_G2_IO3	PA6		TSC_G6_IO3	PB13
	TSC_G2_IO4	PA7		TSC_G6_IO4	PB14
3	TSC_G3_IO1	PC5	7	TSC_G7_IO1	PC0
	TSC_G3_IO2	PB0		TSC_G7_IO2	PC1
	TSC_G3_IO3	PB1		TSC_G7_IO3	PC2
	TSC_G3_IO4	PB2		TSC_G7_IO4	PC3
4	TSC_G4_IO1	PA9	8	TSC_G8_IO1	PC6
	TSC_G4_IO2	PA10		TSC_G8_IO2	PC7
	TSC_G4_IO3	PA11		TSC_G8_IO3	PC8
	TSC_G4_IO4	PA12		TSC_G8_IO4	PC9

1. This GPIO offers a reduced touch sensing sensitivity. It is thus recommended to use it as sampling capacitor I/O.

3.17 Timers and watchdogs

The ultra-low-power STM32L052x6/8 devices include three general-purpose timers, one low- power timer (LPTIM), one basic timer, two watchdog timers and the SysTick timer.

Table 10 compares the features of the general-purpose and basic timers.

Table 10. Timer feature comparison

Timer	Counter resolution	Counter type	Prescaler factor	DMA request generation	Capture/compare channels	Complementary outputs
TIM2	16-bit	Up, down, up/down	Any integer between 1 and 65536	Yes	4	No
TIM21, TIM22	16-bit	Up, down, up/down	Any integer between 1 and 65536	No	2	No
TIM6	16-bit	Up	Any integer between 1 and 65536	Yes	0	No

3.17.1 General-purpose timers (TIM2, TIM21 and TIM22)

There are three synchronizable general-purpose timers embedded in the STM32L052x6/8 devices (see *Table 10* for differences).

TIM2

TIM2 is based on 16-bit auto-reload up/down counter. It includes a 16-bit prescaler. It features four independent channels each for input capture/output compare, PWM or one-pulse mode output.

The TIM2 general-purpose timers can work together or with the TIM21 and TIM22 general-purpose timers via the Timer Link feature for synchronization or event chaining. Their counter can be frozen in debug mode. Any of the general-purpose timers can be used to generate PWM outputs.

TIM2 has independent DMA request generation.

This timer is capable of handling quadrature (incremental) encoder signals and the digital outputs from 1 to 3 hall-effect sensors.

TIM21 and TIM22

TIM21 and TIM22 are based on a 16-bit auto-reload up/down counter. They include a 16-bit prescaler. They have two independent channels for input capture/output compare, PWM or one-pulse mode output. They can work together and be synchronized with the TIM2, full-featured general-purpose timers.

They can also be used as simple time bases and be clocked by the LSE clock source (32.768 kHz) to provide time bases independent from the main CPU clock.

3.17.2 Low-power Timer (LPTIM)

The low-power timer has an independent clock and is running also in Stop mode if it is clocked by LSE, LSI or an external clock. It is able to wakeup the devices from Stop mode.

This low-power timer supports the following features:

- 16-bit up counter with 16-bit autoreload register
- 16-bit compare register
- Configurable output: pulse, PWM
- Continuous / one shot mode
- Selectable software / hardware input trigger
- Selectable clock source
  - Internal clock source: LSE, LSI, HSI or APB clock
  - External clock source over LPTIM input (working even with no internal clock source running, used by the Pulse Counter Application)
- Programmable digital glitch filter
- Encoder mode

3.17.3 Basic timer (TIM6)

This timer can be used as a generic 16-bit timebase. It is mainly used for DAC trigger generation.

3.17.4 SysTick timer

This timer is dedicated to the OS, but could also be used as a standard downcounter. It is based on a 24-bit downcounter with autoreload capability and a programmable clock source. It features a maskable system interrupt generation when the counter reaches ‘0’.

3.17.5 Independent watchdog (IWDG)

The independent watchdog is based on a 12-bit downcounter and 8-bit prescaler. It is clocked from an independent 37 kHz internal RC and, as it operates independently of the main clock, it can operate in Stop and Standby modes. It can be used either as a watchdog to reset the device when a problem occurs, or as a free-running timer for application timeout management. It is hardware- or software-configurable through the option bytes. The counter can be frozen in debug mode.

3.17.6 Window watchdog (WWDG)

The window watchdog is based on a 7-bit downcounter that can be set as free-running. It can be used as a watchdog to reset the device when a problem occurs. It is clocked from the main clock. It has an early warning interrupt capability and the counter can be frozen in debug mode.

3.18 Communication interfaces

3.18.1 I^2C bus

two I^2C interface (I2C1, I2C2) can operate in multimaster or slave modes.

Each I^2C interface can support Standard mode (Sm, up to 100 kbit/s), Fast mode (Fm, up to 400 kbit/s) and Fast Mode Plus (Fm+, up to 1 Mbit/s) with 20 mA output drive on some I/Os.

7-bit and 10-bit addressing modes, multiple 7-bit slave addresses (2 addresses, 1 with configurable mask) are also supported as well as programmable analog and digital noise filters.

Table 11. Comparison of I2C analog and digital filters

	Analog filter	Digital filter
Pulse width of suppressed spikes	≥ 50 ns	Programmable length from 1 to 15 I2C peripheral clocks
Benefits	Available in Stop mode	1. Extra filtering capability vs. standard requirements. 2. Stable length
Drawbacks	Variations depending on temperature, voltage, process	Wakeup from Stop on address match is not available when digital filter is enabled.

In addition, I2C1 provides hardware support for SMBus 2.0 and PMBus 1.1: ARP capability, Host notify protocol, hardware CRC (PEC) generation/verification, timeouts verifications and ALERT protocol management. I2C1 also has a clock domain independent from the CPU clock, allowing the I2C1 to wake up the MCU from Stop mode on address match.

Each I2C interface can be served by the DMA controller.

Refer to *Table 12* for an overview of I2C interface features.

Table 12. STM32L052x6/8 I²C implementation

I2C features(1)	I2C1	I2C2
7-bit addressing mode	X	X
10-bit addressing mode	X	X
Standard mode (up to 100 kbit/s)	X	X
Fast mode (up to 400 kbit/s)	X	X
Fast Mode Plus with 20 mA output drive I/Os (up to 1 Mbit/s)	X	X(2)
Independent clock	X	-
SMBus	X	-
Wakeup from STOP	X	-

1. X = supported.
2. See for the list of I/Os that feature Fast Mode Plus capability

3.18.2 Universal synchronous/asynchronous receiver transmitter (USART)

The two USART interfaces (USART1, USART2) are able to communicate at speeds of up to 4 Mbit/s.

They provide hardware management of the CTS, RTS and RS485 driver enable (DE) signals, multiprocessor communication mode, master synchronous communication and single-wire half-duplex communication mode. They also support SmartCard communication (ISO 7816), IrDA SIR ENDEC, LIN Master/Slave capability, auto baud rate feature and has a clock domain independent from the CPU clock, allowing to wake up the MCU from Stop mode using baudrates up to 42 Kbaud.

All USART interfaces can be served by the DMA controller.

Table 13 for the supported modes and features of USART interfaces.

Table 13. USART implementation

USART modes/features(1)	USART1 and USART2
Hardware flow control for modem	X
Continuous communication using DMA	X
Multiprocessor communication	X
Synchronous mode(2)	X
Smartcard mode	X
Single-wire half-duplex communication	X
IrDA SIR ENDEC block	X
LIN mode	X
Dual clock domain and wakeup from Stop mode	X
Receiver timeout interrupt	X

Table 13. USART implementation (continued)

USART modes/features(1)	USART1 and USART2
Modbus communication	X
Auto baud rate detection (4 modes)	X
Driver Enable	X

1. X = supported.
2. This mode allows using the USART as an SPI master.

3.18.3 Low-power universal asynchronous receiver transmitter (LPUART)

The devices embed one Low-power UART. The LPUART supports asynchronous serial communication with minimum power consumption. It supports half duplex single wire communication and modem operations (CTS/RTS). It allows multiprocessor communication.

The LPUART has a clock domain independent from the CPU clock. It can wake up the system from Stop mode using baudrates up to 46 Kbaud. The Wakeup events from Stop mode are programmable and can be:

- Start bit detection
- Or any received data frame
- Or a specific programmed data frame

Only a 32.768 kHz clock (LSE) is needed to allow LPUART communication up to 9600 baud. Therefore, even in Stop mode, the LPUART can wait for an incoming frame while having an extremely low energy consumption. Higher speed clock can be used to reach higher baudrates.

LPUART interface can be served by the DMA controller.

3.18.4 Serial peripheral interface (SPI)/Inter-integrated sound (I2S)

Up to two SPIs are able to communicate at up to 16 Mbits/s in slave and master modes in full-duplex and half-duplex communication modes. The 3-bit prescaler gives 8 master mode frequencies and the frame is configurable to 8 bits or 16 bits. The hardware CRC generation/verification supports basic SD Card/MMC modes.

The USARTs with synchronous capability can also be used as SPI master.

One standard I2S interfaces (multiplexed with SPI2) is available. It can operate in master or slave mode, and can be configured to operate with a 16-/32-bit resolution as input or output channels. Audio sampling frequencies from 8 kHz up to 192 kHz are supported. When the I2S interfaces is configured in master mode, the master clock can be output to the external DAC/CODEC at 256 times the sampling frequency.

The SPIs can be served by the DMA controller.

Refer to *Table 14* for the differences between SPI1 and SPI2.

Table 14. SPI/I2S implementation

SPI features[1]	SPI1	SPI2
Hardware CRC calculation	X	X
I2S mode	-	X
TI mode	X	X

1. X = supported.

3.18.5 Universal serial bus (USB)

The STM32L052x6/8 embed a full-speed USB device peripheral compliant with the USB specification version 2.0. The internal USB PHY supports USB FS signaling, embedded DP pull-up and also battery charging detection according to Battery Charging Specification Revision 1.2. The USB interface implements a full-speed (12 Mbit/s) function interface with added support for USB 2.0 Link Power Management. It has software-configurable endpoint setting with packet memory up to 1 Kbyte and suspend/resume support. It requires a precise 48 MHz clock which can be generated from the internal main PLL (the clock source must use a HSE crystal oscillator) or by the internal 48 MHz oscillator in automatic trimming mode. The synchronization for this oscillator can be taken from the USB data stream itself (SOF signalization) which allows crystal-less operation.

3.19 Clock recovery system (CRS)

The STM32L052x6/8 embed a special block which allows automatic trimming of the internal 48 MHz oscillator to guarantee its optimal accuracy over the whole device operational range. This automatic trimming is based on the external synchronization signal, which could be either derived from USB SOF signalization, from LSE oscillator, from an external signal on CRS_SYNC pin or generated by user software. For faster lock-in during startup it is also possible to combine automatic trimming with manual trimming action.

3.20 Cyclic redundancy check (CRC) calculation unit

The CRC (cyclic redundancy check) calculation unit is used to get a CRC code using a configurable generator polynomial value and size.

Among other applications, CRC-based techniques are used to verify data transmission or storage integrity. In the scope of the EN/IEC 60335-1 standard, they offer a means of verifying the Flash memory integrity. The CRC calculation unit helps compute a signature of the software during runtime, to be compared with a reference signature generated at linktime and stored at a given memory location.

3.21 Serial wire debug port (SW-DP)

An Arm SW-DP interface is provided to allow a serial wire debugging tool to be connected to the MCU.

4 Pin descriptions

Figure 3. STM32L052x6/8 LQFP64 pinout

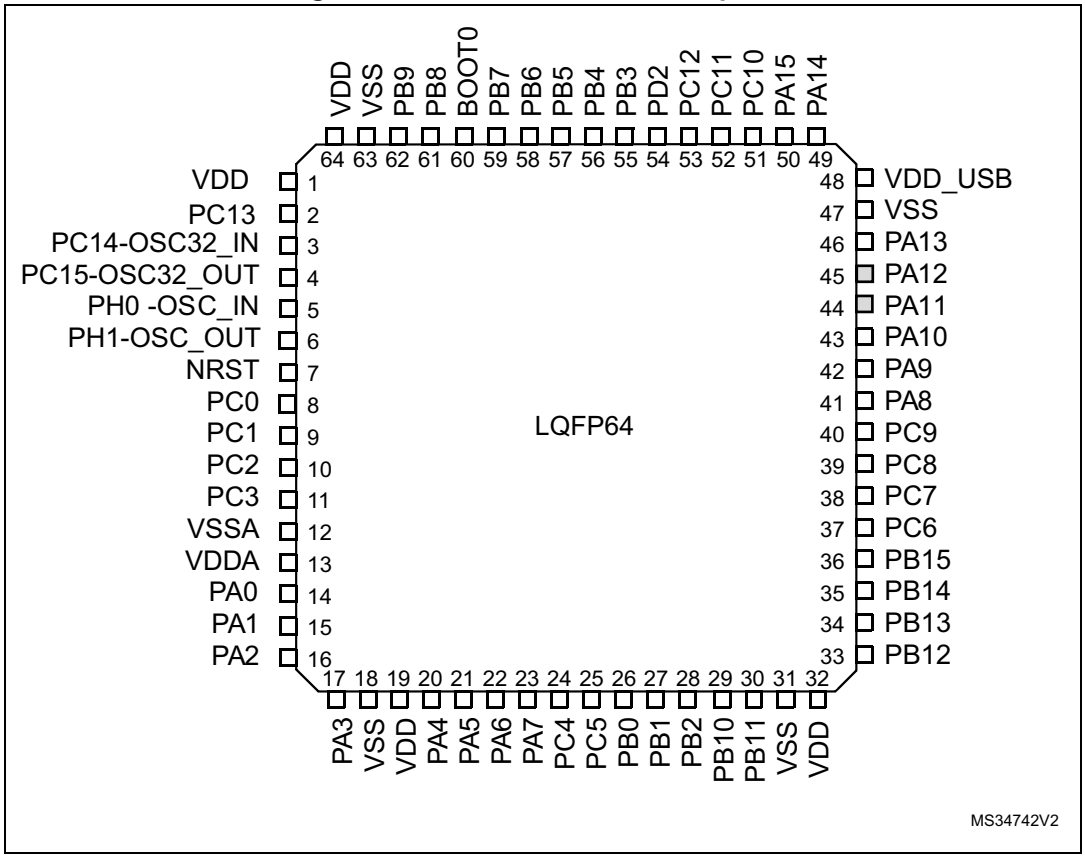

1. The above figure shows the package top view.
2. The I/O pins supplied by VDD_USB are shown in grey.

Figure 4. STM32L052x6/8 TFBGA64 ballout

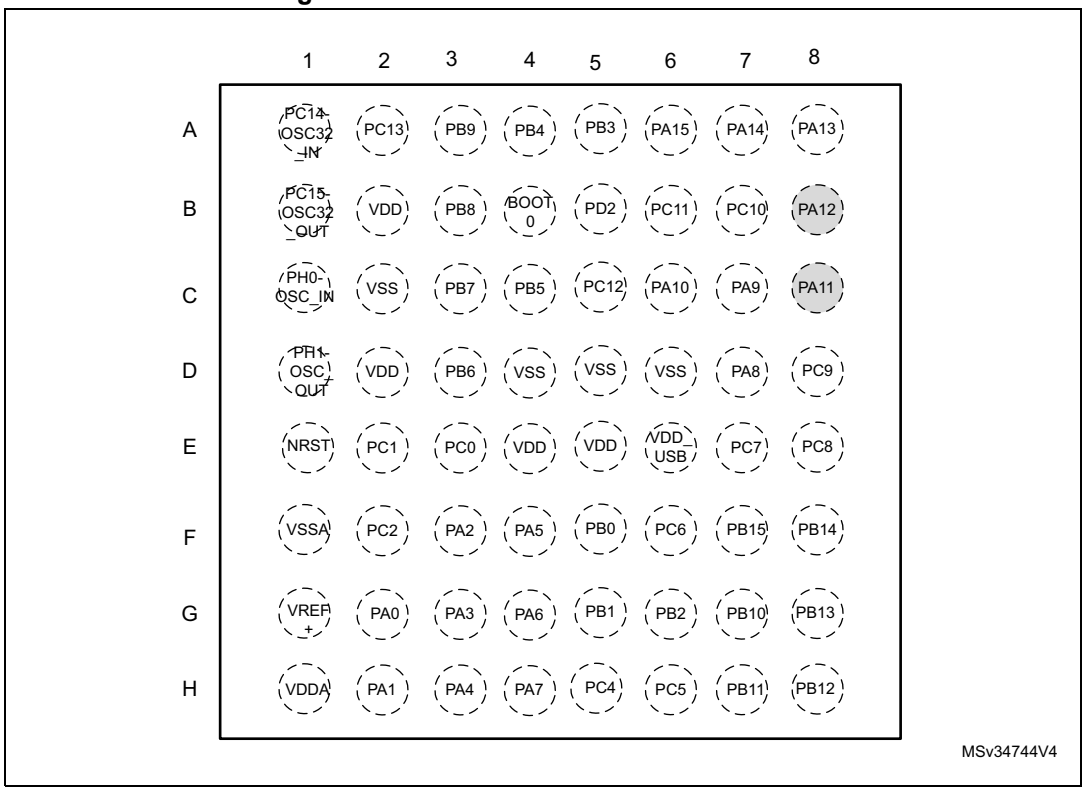

1. The above figure shows the package top view.
2. the I/O pins supplied by VDD_USB are shown in grey.

Figure 5. STM32L052x6/8 LQFP48 pinout

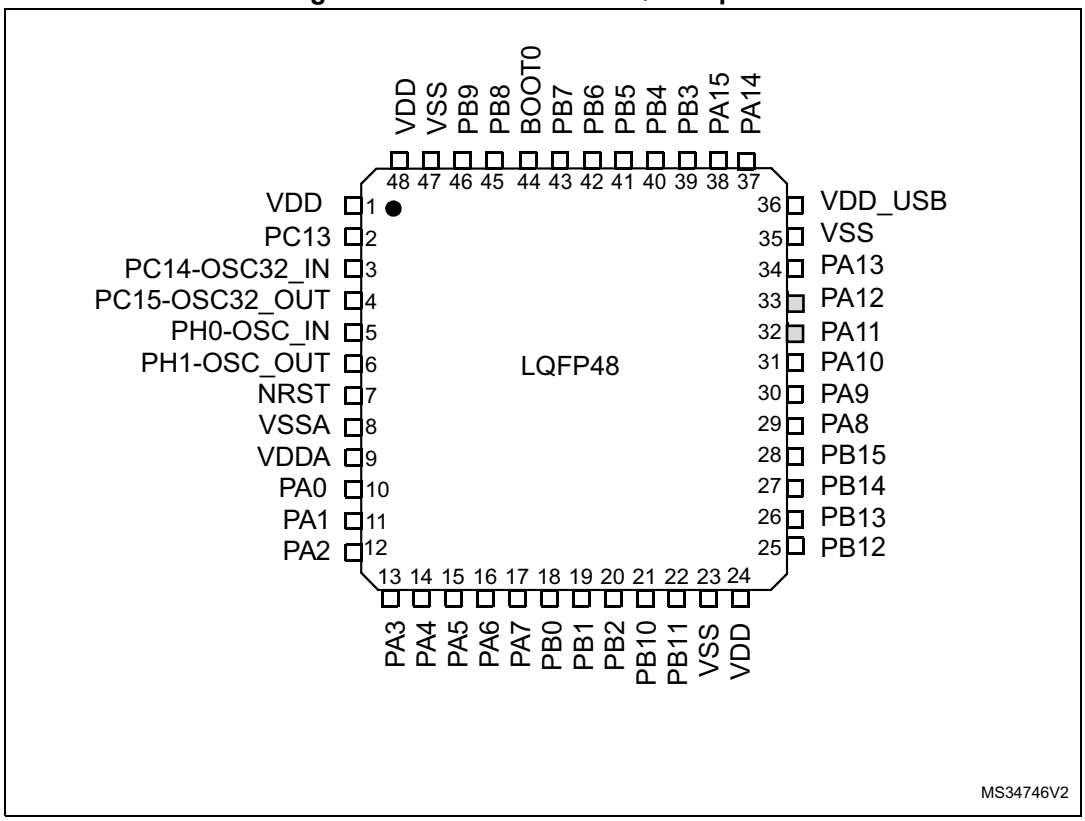

1. The above figure shows the package top view.
2. The I/O pins supplied by VDD_USB are shown in grey.

Figure 6. STM32L052x6/8 UFQFPN48

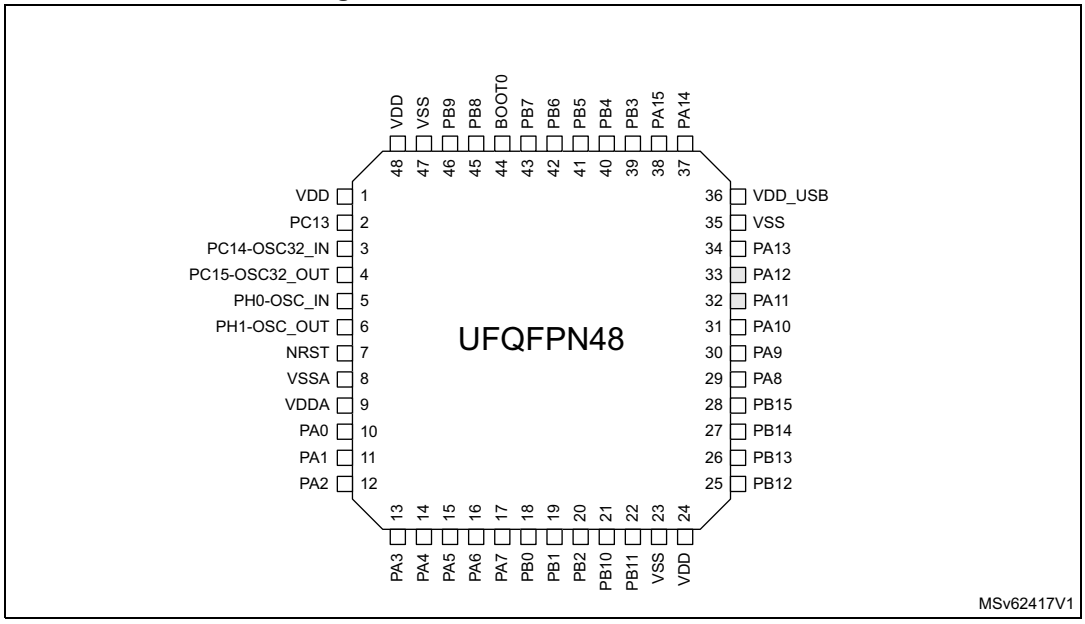

1. The above figure shows the package top view.
2. The I/O pins supplied by VDD_USB are shown in grey.

Figure 7. STM32L052x6/8 WLCSP36 ballout

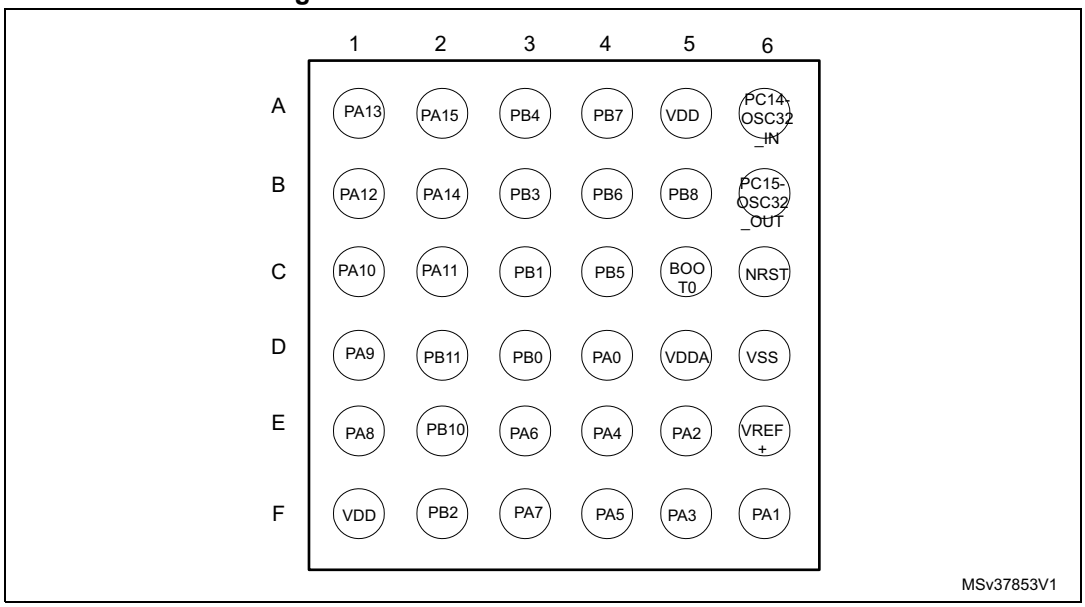

1. The above figure shows the package top view.

Figure 8. STM32L052x6/8 LQFP32 pinout

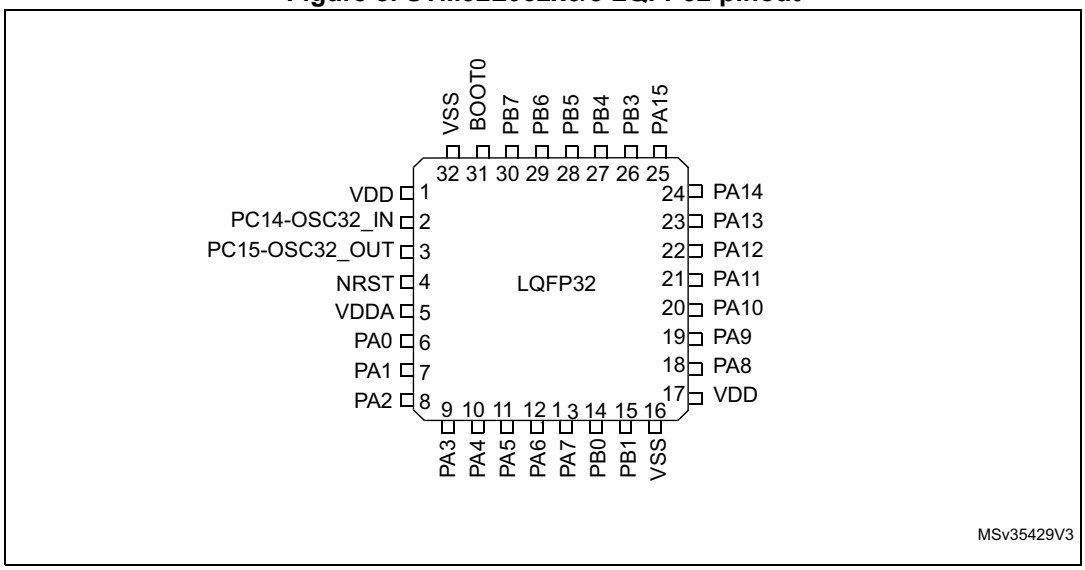

1. The above figure shows the package top view.

Figure 9. STM32L052x6/8 UFQFPN32 pinout

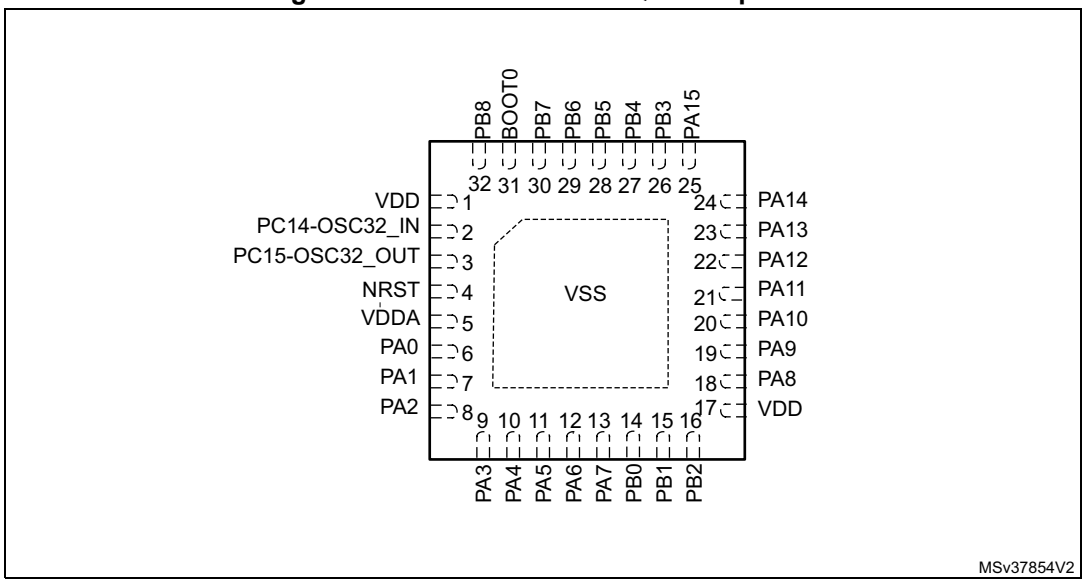

1. The above figure shows the package top view.

Table 15. Legend/abbreviations used in the pinout table

Name		Abbreviation	Definition
Pin name		Unless otherwise specified in brackets below the pin name, the pin function during and after reset is the same as the actual pin name	
Pin type		S	Supply pin
		I	Input only pin
		I/O	Input / output pin
I/O structure		FT	5 V tolerant I/O
		FTf	5 V tolerant I/O, FM+ capable
		TC	Standard 3.3V I/O
		B	Dedicated BOOT0 pin
		RST	Bidirectional reset pin with embedded weak pull-up resistor
Notes		Unless otherwise specified by a note, all I/Os are set as floating inputs during and after reset.	
Pin functions	Alternate functions	Functions selected through GPIOx_AFR registers	
	Additional functions	Functions directly selected/enabled through peripheral registers	

Table 16. STM32L052x6/8 pin definitions

Pin Number							Pin name (function after reset)	Pin type	I/O structure	Notes	Alternate functions	Additional functions
LQFP32	UFQFN32	WLCSP36[1]	LQFP48	UFQFPN48	LQFP64	TFBGA64						
-	-	-	1	1	1	B2	VDD	S	-	-	-	-
-	-	-	2	2	2	A2	PC13	I/O	FT	-	-	RTC_TAMP1/ RTC_TS/RTC _OUT/WKUP2
2	2	A6	3	3	3	A1	PC14-OSC32_IN (PC14)	I/O	FT	-	-	OSC32_IN
3	3	B6	4	4	4	B1	PC15-OSC32_OUT (PC15)	I/O	TC	-	-	OSC32_OUT
-	-	-	5	5	5	C1	PH0-OSC_IN (PH0)	I/O	TC	-	USB_CRS_SYNC	OSC_IN
-	-	-	6	6	6	D1	PH1-OSC_OUT (PH1)	I/O	TC	-	-	OSC_OUT
4	4	C6	7	7	7	E1	NRST	I/O	RST	-	-	-
-	-	-	-	-	8	E3	PC0	I/O	FT	-	LPTIM1_IN1, EVENTOUT, TSC_G7_IO1	ADC_IN10
-	-	-	-	-	9	E2	PC1	I/O	FT	-	LPTIM1_OUT, EVENTOUT, TSC_G7_IO2	ADC_IN11
-	-	-	-	-	10	F2	PC2	I/O	FT	-	LPTIM1_IN2, SPI2_MISO/I2S2_MC K, TSC_G7_IO3	ADC_IN12
-	-	-	-	-	11	-	PC3	I/O	FT	-	LPTIM1_ETR, SPI2_MOSI/I2S2_SD, TSC_G7_IO4	ADC_IN13
-	-	-	8	8	12	F1	VSSA	S	-	-	-	-
-	-	E6	-	-	-	G1	VREF+	S	-	-	-	-
5	5	D5	9	9	13	H1	VDDA	S	-	-	-	-

Table 16. STM32L052x6/8 pin definitions (continued)

Pin Number							Pin name (function after reset)	Pin type	I/O structure	Notes	Alternate functions	Additional functions
LQFP32	UFQFN32	WLCSP36[1]	LQFP48	UFQFPN48	LQFP64	TFBGA64						
6	6	D4	10	10	14	G2	PA0	I/O	TC	-	TIM2_CH1, TSC_G1_IO1, USART2_CTS, TIM2_ETR, COMP1_OUT	COMP1_INM6, ADC_IN0, RTC_TAMP2/ WKUP1
7	7	F6	11	11	15	H2	PA1	I/O	FT	-	EVENTOUT, TIM2_CH2, TSC_G1_IO2, USART2_RTS/ USART2_DE, TIM21_ETR	COMP1_INP, ADC_IN1
8	8	E5	12	12	16	F3	PA2	I/O	FT	-	TIM21_CH1, TIM2_CH3, TSC_G1_IO3, USART2_TX, COMP2_OUT	COMP2_INM6, ADC_IN2
9	9	F5	13	13	17	G3	PA3	I/O	FT	-	TIM21_CH2, TIM2_CH4, TSC_G1_IO4, USART2_RX	COMP2_INP, ADC_IN3
-	-	-	-	-	18	C2	VSS	S	-	-	-	-
-	-	-	-	-	19	D2	VDD	S	-	-	-	-
10	10	E4	14	14	20	H3	PA4	I/O	TC	(2)	SPI1_NSS, TSC_G2_IO1, USART2_CK, TIM22_ETR	COMP1_INM4, COMP2_INM4, ADC_IN4, DAC_OUT
11	11	F4	15	15	21	F4	PA5	I/O	TC	-	SPI1_SCK, TIM2_ETR, TSC_G2_IO2, TIM2_CH1	COMP1_INM5, COMP2_INM5, ADC_IN5
12	12	E3	16	16	22	G4	PA6	I/O	FT	-	SPI1_MISO, TSC_G2_IO3, LPUART1_CTS, TIM22_CH1, EVENTOUT, COMP1_OUT	ADC_IN6

Table 16. STM32L052x6/8 pin definitions (continued)

Pin Number							Pin name (function after reset)	Pin type	I/O structure	Notes	Alternate functions	Additional functions
LQFP32	UFQFN32	WLCSP36[1]	LQFP48	UFQFPN48	LQFP64	TFBGA64						
13	13	F3	17	17	23	H4	PA7	I/O	FT	-	SPI1_MOSI, TSC_G2_IO4, TIM22_CH2, EVENTOUT, COMP2_OUT	ADC_IN7
-	-	-	-	-	24	H5	PC4	I/O	FT	-	EVENTOUT, LPUART1_TX	ADC_IN14
-	-	-	-	-	25	H6	PC5	I/O	FT	-	LPUART1_RX, TSC_G3_IO1	ADC_IN15
14	14	D3	18	18	26	F5	PB0	I/O	FT	-	EVENTOUT, TSC_G3_IO2	ADC_IN8, VREF_OUT
15	15	C3	19	19	27	G5	PB1	I/O	FT	-	TSC_G3_IO3, LPUART1_RTS/ LPUART1_DE	ADC_IN9, VREF_OUT
-	16	F2	20	20	28	G6	PB2	I/O	FT	-	LPTIM1_OUT, TSC_G3_IO4	-
-	-	E2	21	21	29	G7	PB10	I/O	FT	-	TIM2_CH3, TSC_SYNC, LPUART1_TX, SPI2_SCK, I2C2_SCL	-
-	-	D2	22	22	30	H7	PB11	I/O	FT	-	EVENTOUT, TIM2_CH4, TSC_G6_IO1, LPUART1_RX, I2C2_SDA	-
16	-	-	23	23	31	D6	VSS	S	-	-	-	-
17	17	F1	24	24	32	E5	VDD	S	-	-	-	-
-	-	-	25	25	33	H8	PB12	I/O	FT	-	SPI2_NSS/I2S2_WS, LPUART1_RTS/ LPUART1_DE, TSC_G6_IO2, I2C2_SMBA, EVENTOUT	-

Table 16. STM32L052x6/8 pin definitions (continued)

Pin Number							Pin name (function after reset)	Pin type	I/O structure	Notes	Alternate functions	Additional functions
LQFP32	UFQFN32	WLCSP36[1]	LQFP48	UFQFPN48	LQFP64	TFBGA64						
-	-	-	26	26	34	G8	PB13	I/O	FTf	-	SPI2_SCK/I2S2_CK, TSC_G6_IO3, LPUART1_CTS, I2C2_SCL, TIM21_CH1	-
-	-	-	27	27	35	F8	PB14	I/O	FTf	-	SPI2_MISO/I 2S2_MCK, RTC_OUT, TSC_G6_IO4, LPUART1_RTS/ LPUART1_DE, I2C2_SDA, TIM21_CH2	-
-	-	-	28	28	36	F7	PB15	I/O	FT	-	SPI2_MOSI/I2S2_SD, RTC_REFIN	-
-	-	-	-	-	37	F6	PC6	I/O	FT	-	TIM22_CH1, TSC_G8_IO1	-
-	-	-	-	-	38	E7	PC7	I/O	FT	-	TIM22_CH2, TSC_G8_IO2	-
-	-	-	-	-	39	E8	PC8	I/O	FT	-	TIM22_ETR, TSC_G8_IO3	-
-	-	-	-	-	40	D8	PC9	I/O	FT	-	TIM21_ETR, USB_NOE, TSC_G8_IO4	-
18	18	E1	29	29	41	D7	PA8	I/O	FT	-	MCO, USB_CRS_SYNC, EVENTOUT, USART1_CK	-
19	19	D1	30	30	42	C7	PA9	I/O	FT	-	MCO, TSC_G4_IO1, USART1_TX	-
20	20	C1	31	31	43	C6	PA10	I/O	FT	-	TSC_G4_IO2, USART1_RX	-
21	21	C2	32	32	44	C8	PA11[3]	I/O	FT	-	SPI1_MISO, EVENTOUT, TSC_G4_IO3, USART1_CTS, COMP1_OUT	USB_DM

Table 16. STM32L052x6/8 pin definitions (continued)

Pin Number							Pin name (function after reset)	Pin type	I/O structure	Notes	Alternate functions	Additional functions
LQFP32	UFQFN32	WLCSP36[1]	LQFP48	UFQFPN48	LQFP64	TFBGA64						
22	22	B1	33	33	45	B8	PA12[3]	I/O	FT	-	SPI1_MOSI, EVENTOUT, TSC_G4_IO4, USART1_RTS/ USART1_DE, COMP2_OUT	USB_DP
23	23	A1	34	34	46	A8	PA13	I/O	FT	-	SWDIO, USB_NOE	-
-	-	-	35	35	47	D5	VSS	S	-	-	-	-
-	-	-	36	36	48	E6	VDD_USB	S	-	-	-	-
24	24	B2	37	37	49	A7	PA14	I/O	FT	-	SWCLK, USART2_TX	-
25	25	A2	38	38	50	A6	PA15	I/O	FT	-	SPI1_NSS, TIM2_ETR, EVENTOUT, USART2_RX, TIM2_CH1	-
-	-	-	-	-	51	B7	PC10	I/O	FT	-	LPUART1_TX	-
-	-	-	-	-	52	B6	PC11	I/O	FT	-	LPUART1_RX	-
-	-	-	-	-	53	C5	PC12	I/O	FT	-	-	-
-	-	-	-	-	54	B5	PD2	I/O	FT	-	LPUART1_RTS/ LPUART1_DE	-
26	26	B3	39	39	55	A5	PB3	I/O	FT	-	SPI1_SCK, TIM2_CH2, TSC_G5I_O1, EVENTOUT	COMP2_INN
27	27	A3	40	40	56	A4	PB4	I/O	FT	-	SPI1_MISO, EVENTOUT, TSC_G5_IO2, TIM22_CH1	COMP2_INP
28	28	C4	41	41	57	C4	PB5	I/O	FT	-	SPI1_MOSI, LPTIM1_IN1, I2C1_SMBA, TIM22_CH2	COMP2_INP

Table 16. STM32L052x6/8 pin definitions (continued)

Pin Number							Pin name (function after reset)	Pin type	I/O structure	Notes	Alternate functions	Additional functions
LQFP32	UFQFN32	WLCSP36[1]	LQFP48	UFQFPN48	LQFP64	TFBGA64						
29	29	B4	42	42	58	D3	PB6	I/O	FTf	-	USART1_TX, I2C1_SCL, LPTIM1_ETR, TSC_G5_IO3	COMP2_INP
30	30	A4	43	43	59	C3	PB7	I/O	FTf	-	USART1_RX, I2C1_SDA, LPTIM1_IN2, TSC_G5_IO4	COMP2_INP, PVD_IN
31	31	C5	44	44	60	B4	BOOT0	B	-	-	-	-
-	32	B5	45	45	61	B3	PB8	I/O	FTf	-	TSC_SYNC, I2C1_SCL	-
-	-	-	46	46	62	A3	PB9	I/O	FTf	-	EVENTOUT, I2C1_SDA, SPI2_NSS/I2S2_WS	-
32	-	D6	47	47	63	D4	VSS	S	-	-	-	-
1	1	A5	48	48	64	E4	VDD	S	-	-	-	-

1. PB9/12/13/14/15, PH0/1 and PC13 GPIOs should be configured as output and driven Low, even if they are not available on this package.
2. PA4 offers a reduced touch sensing sensitivity. It is thus recommended to use it as sampling capacitor I/O.
3. These pins are powered by VDD_USB. For all characteristics that refer to V_{DD}, V_{DD_USB} must be used instead.

Table 17. Alternate function port A

Port		AF0	AF1	AF2	AF3	AF4	AF5	AF6	AF7
		SPI1/TIM21/SYS_AF/EVENTOUT/	-	USB/TIM2/ EVENTOUT/	TSC/ EVENTOUT	USART1/2/3	TIM2/21/22	EVENTOUT	COMP1/2
Port A	PA0	-	-	TIM2_CH1	TSC_G1_IO1	USART2_CTS	TIM2_ETR	-	COMP1_OUT
	PA1	EVENTOUT	-	TIM2_CH2	TSC_G1_IO2	USART2_RTS/ USART2_DE	TIM21_ETR	-	-
	PA2	TIM21_CH1	-	TIM2_CH3	TSC_G1_IO3	USART2_TX	-	-	COMP2_OUT
	PA3	TIM21_CH2	-	TIM2_CH4	TSC_G1_IO4	USART2_RX	-	-	-
	PA4	SPI1_NSS	-	-	TSC_G2_IO1	USART2_CK	TIM22_ETR	-	-
	PA5	SPI1_SCK	-	TIM2_ETR	TSC_G2_IO2		TIM2_CH1	-	-
	PA6	SPI1_MISO	-	-	TSC_G2_IO3	LPUART1_CTS	TIM22_CH1	EVENTOUT	COMP1_OUT
	PA7	SPI1_MOSI	-	-	TSC_G2_IO4		TIM22_CH2	EVENTOUT	COMP2_OUT
	PA8	MCO	-	USB_CRS_SYNC	EVENTOUT	USART1_CK	-	-	-
	PA9	MCO	-	-	TSC_G4_IO1	USART1_TX	-	-	-
	PA10	-	-	-	TSC_G4_IO2	USART1_RX	-	-	-
	PA11	SPI1_MISO	-	EVENTOUT	TSC_G4_IO3	USART1_CTS	-	-	COMP1_OUT
	PA12	SPI1_MOSI	-	EVENTOUT	TSC_G4_IO4	USART1_RTS/ USART1_DE	-	-	COMP2_OUT
	PA13	SWDIO	-	USB_NOE	-	-	-	-	-
	PA14	SWCLK	-	-	-	USART2_TX	-	-	-
	PA15	SPI1_NSS	-	TIM2_ETR	EVENTOUT	USART2_RX	TIM2_CH1	-	-

Table 18. Alternate function port B

Port		AF0	AF1	AF2	AF3	AF4	AF5	AF6
		SPI1/SPI2/I2S2/ USART1/ EVENTOUT/	I2C1	LPUART1/LPTIM /TIM2/SYS_AF/ EVENTOUT	I2C1/TSC	I2C1/TIM22/ EVENTOUT/ LPUART1	SPI2/I2S2/I2C2	I2C2/TIM21/ EVENTOUT
Port B	PB0	EVENTOUT	-	-	TSC_G3_IO2	-	-	-
	PB1	-	-	-	TSC_G3_IO3	LPUART1_RTS/ LPUART1_DE	-	-
	PB2	-	-	LPTIM1_OUT	TSC_G3_IO4	-	-	-
	PB3	SPI1_SCK	-	TIM2_CH2	TSC_G5I_O1	EVENTOUT	-	-
	PB4	SPI1_MISO	-	EVENTOUT	TSC_G5_IO2	TIM22_CH1	-	-
	PB5	SPI1_MOSI	-	LPTIM1_IN1	I2C1_SMBA	TIM22_CH2	-	-
	PB6	USART1_TX	I2C1_SCL	LPTIM1_ETR	TSC_G5_IO3	-	-	-
	PB7	USART1_RX	I2C1_SDA	LPTIM1_IN2	TSC_G5_IO4	-	-	-
	PB8	-	-	-	TSC_SYNC	I2C1_SCL	-	-
	PB9	-	-	EVENTOUT	-	I2C1_SDA	SPI2_NSS/I2S2_ WS	-
	PB10	-	-	TIM2_CH3	TSC_SYNC	LPUART1_TX	SPI2_SCK	I2C2_SCL
	PB11	EVENTOUT	-	TIM2_CH4	TSC_G6_IO1	LPUART1_RX		I2C2_SDA
	PB12	SPI2_NSS/I2S2_WS	-	LPUART1_RTS/ LPUART1_DE	TSC_G6_IO2	-	I2C2_SMBA	EVENTOUT
	PB13	SPI2_SCK/I2S2_CK	-	-	TSC_G6_IO3	LPUART1_CTS	I2C2_SCL	TIM21_CH1
	PB14	SPI2_MISO/I2S2_MCK	-	RTC_OUT	TSC_G6_IO4	LPUART1_RTS/ LPUART1_DE	I2C2_SDA	TIM21_CH2
	PB15	SPI2_MOSI/I2S2_SD	-	RTC_REFIN	-	-	-	-

Table 19. Alternate function port C

Port		AF0	AF1	AF2	AF3
		LPUART1/LPTIM/ TIM21/12/ EVENTOUT/	-	SPI2/I2S2/USB/ LPUART1/ EVENTOUT	TSC
Port C	PC0	LPTIM1_IN1	-	EVENTOUT	TSC_G7_IO1
	PC1	LPTIM1_OUT	-	EVENTOUT	TSC_G7_IO2
	PC2	LPTIM1_IN2	-	SPI2_MISO/I2S2_MCK	TSC_G7_IO3
	PC3	LPTIM1_ETR	-	SPI2_MOSI/I2S2_SD	TSC_G7_IO4
	PC4	EVENTOUT	-	LPUART1_TX	-
	PC5	-	-	LPUART1_RX	TSC_G3_IO1
	PC6	TIM22_CH1	-	-	TSC_G8_IO1
	PC7	TIM22_CH2	-	-	TSC_G8_IO2
	PC8	TIM22_ETR	-	-	TSC_G8_IO3
	PC9	TIM21_ETR	-	USB_NOE	TSC_G8_IO4
	PC10	LPUART1_TX	-	-	-
	PC11	LPUART1_RX	-	-	-
	PC12	-	-	-	-
	PC13	-	-	-	-
	PC14	-	-	-	-
	PC15	-	-	-	-

Table 20. Alternate function port D

Port		AF0
		LPUART1
Port D	PD2	LPUART1_RTS/LPUART1_DE

Table 21. Alternate function port H

Port		AF0
		USB
Port H	PH0	USB_CRS_SYNC
	PH1	-

5 Memory mapping

Refer to the product line reference manual for details on the memory mapping as well as the boundary addresses for all peripherals.

6 Electrical characteristics

6.1 Parameter conditions

Unless otherwise specified, all voltages are referenced to V_{SS}.

6.1.1 Minimum and maximum values

Unless otherwise specified the minimum and maximum values are guaranteed in the worst conditions of ambient temperature, supply voltage and frequencies by tests in production on 100% of the devices with an ambient temperature at T_A = 25 °C and T_A = $T_A$max (given by the selected temperature range).

Data based on characterization results, design simulation and/or technology characteristics are indicated in the table footnotes and are not tested in production. Based on characterization, the minimum and maximum values refer to sample tests and represent the mean value plus or minus three times the standard deviation (mean±3σ).

6.1.2 Typical values

Unless otherwise specified, typical data are based on T_A = 25 °C, V_{DD} = 3.6 V (for the 1.65 V ≤ V_{DD} ≤ 3.6 V voltage range). They are given only as design guidelines and are not tested.

Typical ADC accuracy values are determined by characterization of a batch of samples from a standard diffusion lot over the full temperature range, where 95% of the devices have an error less than or equal to the value indicated (mean±2σ).

6.1.3 Typical curves

Unless otherwise specified, all typical curves are given only as design guidelines and are not tested.

6.1.4 Loading capacitor

The loading conditions used for pin parameter measurement are shown in *Figure 10*.

6.1.5 Pin input voltage

The input voltage measurement on a pin of the device is described in *Figure 11*.

Figure 10. Pin loading conditions

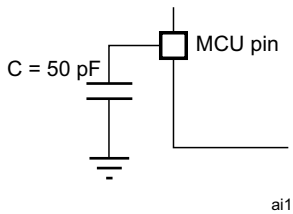

Figure 11. Pin input voltage

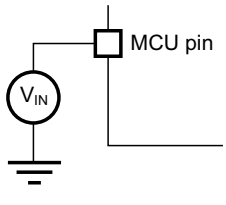

6.1.6 Power supply scheme

Figure 12. Power supply scheme

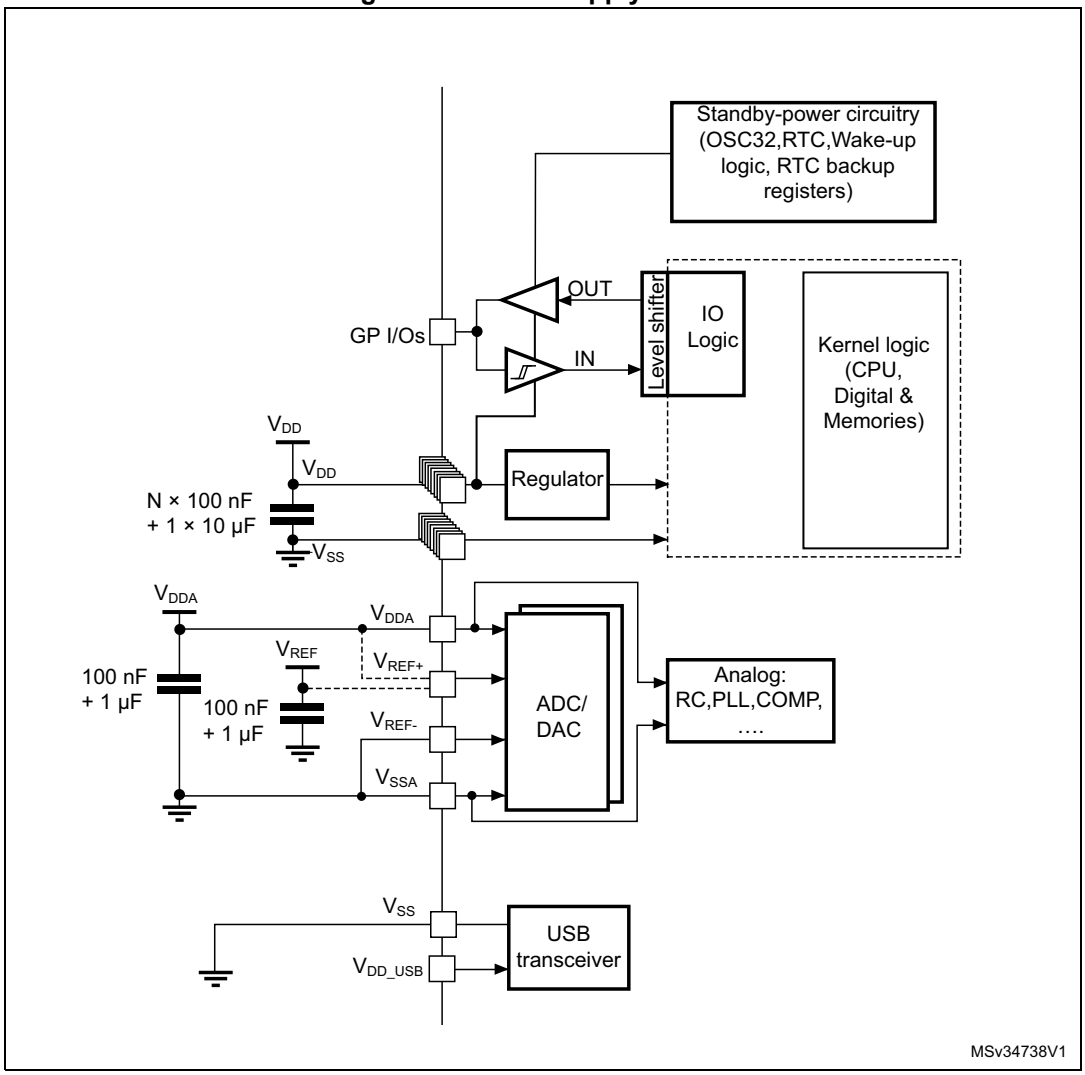

6.1.7 Current consumption measurement

Figure 13. Current consumption measurement scheme

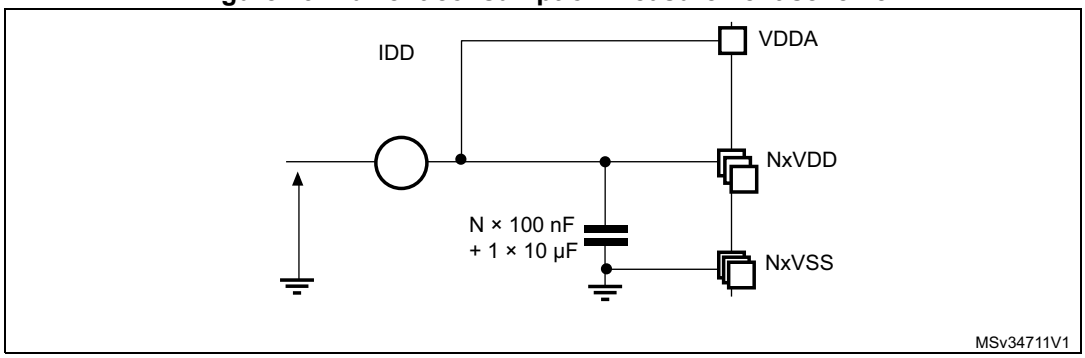

6.2 Absolute maximum ratings

Stresses above the absolute maximum ratings listed in *Table 22: Voltage characteristics*, *Table 23: Current characteristics*, and *Table 24: Thermal characteristics* may cause permanent damage to the device. These are stress ratings only and functional operation of the device at these conditions is not implied. Exposure to maximum rating conditions for extended periods may affect device reliability. Device mission profile (application conditions) is compliant with JEDEC JESD47 Qualification Standard. Extended mission profiles are available on demand.

Table 22. Voltage characteristics

Symbol	Definition	Min	Max	Unit
V_{DD}–V_{SS}	External main supply voltage (including V_{DDA}, V_{DD_USB}, V_{DD})(1)	–0.3	4.0	V
V_{IN}(2)	Input voltage on FT and FTf pins	V_{SS} – 0.3	V_{DD}+4.0	
	Input voltage on TC pins	V_{SS} – 0.3	4.0	
	Input voltage on BOOT0	V_{SS}	V_{DD} + 4.0	
	Input voltage on any other pin	V_{SS} – 0.3	4.0	
$\lvert\Delta V_{DD}\rvert$	Variations between different V_{DDx} power pins	-	50	mV
$\lvert V_{DDA}-V_{DDx}\rvert$	Variations between any V_{DDx} and V_{DDA} power pins(3)	-	300	
$\lvert\Delta V_{SS}\rvert$	Variations between all different ground pins	-	50	
V_{REF+} –V_{DDA}	Allowed voltage difference for V_{REF+} > V_{DDA}	-	0.4	V
$V_{ESD(HBM)}$	Electrostatic discharge voltage (human body model)	see *Section 6.3.11*		

1. All main power (V_{DD},V_{DD_USB}, V_{DDA}) and ground (V_{SS}, V_{SSA}) pins must always be connected to the external power supply, in the permitted range.
2. V_{IN} maximum must always be respected. Refer to *Table 23* for maximum allowed injected current values.
3. It is recommended to power V_{DD} and V_{DDA} from the same source. A maximum difference of 300 mV between V_{DD} and V_{DDA} can be tolerated during power-up and device operation. V_{DD_USB} is independent from V_{DD} and V_{DDA}: its value does not need to respect this rule.

Table 23. Current characteristics

Symbol	Ratings	Max.	Unit
ΣI_{VDD} (2)	Total current into sum of all V_{DD} power lines (source)(1)	105	mA
ΣI_{VSS} (2)	Total current out of sum of all V_{SS} ground lines (sink)(1)	105	
ΣI_{VDD_USB}	Total current into V_{DD_USB} power lines (source)	25	
$I_{VDD(PIN)}$	Maximum current into each V_{DD} power pin (source)(1)	100	
$I_{VSS(PIN)}$	Maximum current out of each V_{SS} ground pin (sink)(1)	100	
I_{IO}	Output current sunk by any I/O and control pin except FTf pins	16	
	Output current sunk by FTf pins	22	
	Output current sourced by any I/O and control pin	-16	
$\Sigma I_{IO(PIN)}$	Total output current sunk by sum of all IOs and control pins except PA11 and PA12(2)	90	
	Total output current sunk by PA11 and PA12	25	
	Total output current sourced by sum of all IOs and control pins(2)	-90	
$I_{INJ(PIN)}$	Injected current on FT, FTf, RST and B pins	-5/+0(3)	
	Injected current on TC pin	± 5(4)	
$\Sigma I_{INJ(PIN)}$	Total injected current (sum of all I/O and control pins)(5)	± 25	

1. All main power (V_{DD}, V_{DDA}) and ground (V_{SS}, V_{SSA}) pins must always be connected to the external power supply, in the permitted range.
2. This current consumption must be correctly distributed over all I/Os and control pins. The total output current must not be sunk/sourced between two consecutive power supply pins referring to high pin count LQFP packages.
3. Positive current injection is not possible on these I/Os. A negative injection is induced by $V_{IN}<V_{SS}$. $I_{INJ(PIN)}$ must never be exceeded. Refer to *Table 22* for maximum allowed input voltage values.
4. A positive injection is induced by $V_{IN} > V_{DD}$ while a negative injection is induced by $V_{IN} < V_{SS}$. $I_{INJ(PIN)}$ must never be exceeded. Refer to *Table 22: Voltage characteristics* for the maximum allowed input voltage values.
5. When several inputs are submitted to a current injection, the maximum $\Sigma I_{INJ(PIN)}$ is the absolute sum of the positive and negative injected currents (instantaneous values).

Table 24. Thermal characteristics

Symbol	Ratings	Value	Unit
T_{STG}	Storage temperature range	–65 to +150	°C
T_J	Maximum junction temperature	150	°C

6.3 Operating conditions

6.3.1 General operating conditions

Table 25. General operating conditions

Symbol	Parameter	Conditions	Min	Max	Unit
f_{HCLK}	Internal AHB clock frequency	-	0	32	MHz
f_{PCLK1}	Internal APB1 clock frequency	-	0	32	
f_{PCLK2}	Internal APB2 clock frequency	-	0	32	
V_{DD}	Standard operating voltage	BOR detector disabled	1.65	3.6	V
		BOR detector enabled, at power-on	1.8	3.6	
		BOR detector disabled, after power-on	1.65	3.6	
V_{DDA}	Analog operating voltage (DAC not used)	Must be the same voltage as V_{DD}(1)	1.65	3.6	V
V_{DDA}	Analog operating voltage (all features)	Must be the same voltage as V_{DD}(1)	1.8	3.6	V
V_{DD_USB}	Standard operating voltage, USB domain(2)	USB peripheral used	3.0	3.6	V
		USB peripheral not used	0	3.6	
V_{IN}	Input voltage on FT, FTf and RST pins(3)	2.0 V ≤ V_{DD} ≤ 3.6 V	-0.3	5.5	V
		1.65 V ≤ V_{DD} ≤ 2.0 V	-0.3	5.2	
	Input voltage on BOOT0 pin	-	0	5.5	
	Input voltage on TC pin	-	-0.3	V_{DD}+0.3	
P_D	Power dissipation at T_A = 85 °C (range 6) or T_A =105 °C (rage 7) (4)	TFBGA64 package	-	327	mW
		LQFP64 package	-	444	
		LQFP48 package	-	363	
		Standard WLCSP36 package	-	318	
		Thin WLCSP36 package	-	338	
		LQFP32 package	-	351	
		UFQFPN32	-	526	
		UFQFPN48	-	654	
	Power dissipation at T_A = 125 °C (range 3) (4)	TFBGA64 package	-	81	
		LQFP64 package	-	111	
		LQFP48 package	-	91	
		Standard WLCSP36 package	-	79	
		Thin WLCSP36 package	-	84	
		LQFP32 package	-	88	
		UFQFPN32	-	132	
		UFQFPN48	-	163	

Table 25. General operating conditions (continued)

Symbol	Parameter	Conditions	Min	Max	Unit
T_A	Temperature range	Maximum power dissipation (range 6)	–40	85	°C
		Maximum power dissipation (range 7)	–40	105	
		Maximum power dissipation (range 3)	–40	125	
T_J	Junction temperature range (range 6)	-40 °C ≤ T_A ≤ 85 °	–40	105	
	Junction temperature range (range 7)	-40 °C ≤ T_A ≤ 105 °C	–40	125	
	Junction temperature range (range 3)	-40 °C ≤ T_A ≤ 125 °C	–40	130	

1. It is recommended to power V_{DD} and V_{DDA} from the same source. A maximum difference of 300 mV between V_{DD} and V_{DDA} can be tolerated during power-up and normal operation.
2. V_{DD_USB} must respect the following conditions:
   - When V_{DD} is powered-on ($V_{DD} < V_{DD_min}$), V_{DD_USB} should be always lower than V_{DD}.
   - When V_{DD} is powered-down ($V_{DD} < V_{DD_min}$), V_{DD_USB} should be always lower than V_{DD}.
   - In operating mode, V_{DD_USB} could be lower or higher V_{DD}.
   - If the USB is not used, V_{DD_USB} must range from V_{DD_min} to V_{DD_max} to be able to use PA11 and PA12 as standard I/Os.
   - If the USB is not used and PA11/PA12 are not used as standard I/Os, VDD_USB must be connected to a V_{SS} or V_{DD} power supply voltage (VDD_USB must not be left floating).
3. To sustain a voltage higher than V_{DD}+0.3V, the internal pull-up/pull-down resistors must be disabled.
4. If T_A is lower, higher P_D values are allowed as long as T_J does not exceed T_J max (see *Table 24: Thermal characteristics on page 57*).

6.3.2 Embedded reset and power control block characteristics

The parameters given in the following table are derived from the tests performed under the ambient temperature condition summarized in *Table 25*.

Table 26. Embedded reset and power control block characteristics

Symbol	Parameter	Conditions	Min	Typ	Max	Unit
t_{VDD}(1)	V_{DD} rise time rate	BOR detector enabled	0	-	∞	µs/V
		BOR detector disabled	0	-	1000	
	V_{DD} fall time rate	BOR detector enabled	20	-	∞	
		BOR detector disabled	0	-	1000	
$T_{RSTTEMPO}$(1)	Reset temporization	V_{DD} rising, BOR enabled	-	2	3.3	ms
		V_{DD} rising, BOR disabled(2)	0.4	0.7	1.6	
$V_{POR/PDR}$	Power-on/power down reset threshold	Falling edge	1	1.5	1.65	V
		Rising edge	1.3	1.5	1.65	
V_{BOR0}	Brown-out reset threshold 0	Falling edge	1.67	1.7	1.74	
		Rising edge	1.69	1.76	1.8	
V_{BOR1}	Brown-out reset threshold 1	Falling edge	1.87	1.93	1.97	
		Rising edge	1.96	2.03	2.07	
V_{BOR2}	Brown-out reset threshold 2	Falling edge	2.22	2.30	2.35	
		Rising edge	2.31	2.41	2.44	
V_{BOR3}	Brown-out reset threshold 3	Falling edge	2.45	2.55	2.6	
		Rising edge	2.54	2.66	2.7	
V_{BOR4}	Brown-out reset threshold 4	Falling edge	2.68	2.8	2.85	
		Rising edge	2.78	2.9	2.95	
V_{PVD0}	Programmable voltage detector threshold 0	Falling edge	1.8	1.85	1.88	
		Rising edge	1.88	1.94	1.99	
V_{PVD1}	PVD threshold 1	Falling edge	1.98	2.04	2.09	
		Rising edge	2.08	2.14	2.18	
V_{PVD2}	PVD threshold 2	Falling edge	2.20	2.24	2.28	
		Rising edge	2.28	2.34	2.38	
V_{PVD3}	PVD threshold 3	Falling edge	2.39	2.44	2.48	
		Rising edge	2.47	2.54	2.58	
V_{PVD4}	PVD threshold 4	Falling edge	2.57	2.64	2.69	
		Rising edge	2.68	2.74	2.79	
V_{PVD5}	PVD threshold 5	Falling edge	2.77	2.83	2.88	
		Rising edge	2.87	2.94	2.99	

Table 26. Embedded reset and power control block characteristics (continued)

Symbol	Parameter	Conditions	Min	Typ	Max	Unit
V_{PVD6}	PVD threshold 6	Falling edge	2.97	3.05	3.09	V
		Rising edge	3.08	3.15	3.20	
V_{hyst}	Hysteresis voltage	BOR0 threshold	-	40	-	mV
		All BOR and PVD thresholds excepting BOR0	-	100	-	

1. Guaranteed by characterization results.
2. Valid for device version without BOR at power up. Please see option "D" in Ordering information scheme for more details.

6.3.3 Embedded internal reference voltage

The parameters given in *Table 28* are based on characterization results, unless otherwise specified.

Table 27. Embedded internal reference voltage calibration values

Calibration value name	Description	Memory address
VREFINT_CAL	Raw data acquired at temperature of 25 °C V_{DDA}= 3 V	0x1FF8 0078 - 0x1FF8 0079

Table 28. Embedded internal reference voltage(1)

Symbol	Parameter	Conditions	Min	Typ	Max	Unit
$V_{REFINT\ out}$(2)	Internal reference voltage	– 40 °C < T_J < +125 °C	1.202	1.224	1.242	V
$T_{VREFINT}$	Internal reference startup time	-	-	2	3	ms
V_{VREF_MEAS}	V_{DDA} and V_{REF+} voltage during V_{REFINT} factory measure	-	2.99	3	3.01	V
A_{VREF_MEAS}	Accuracy of factory-measured V_{REFINT} value(3)	Including uncertainties due to ADC and V_{DDA}/V_{REF+} values	-	-	±5	mV
T_{Coeff}(4)	Temperature coefficient	–40 °C < T_J < +125 °C	-	25	100	ppm/°C
A_{Coeff}(4)	Long-term stability	1000 hours, T= 25 °C	-	-	1000	ppm
$V_{DDCoeff}$(4)	Voltage coefficient	3.0 V < V_{DDA} < 3.6 V	-	-	2000	ppm/V
$T_{S_vrefint}$(4)(5)	ADC sampling time when reading the internal reference voltage	-	5	10	-	µs
T_{ADC_BUF}(4)	Startup time of reference voltage buffer for ADC	-	-	-	10	µs
I_{BUF_ADC}(4)	Consumption of reference voltage buffer for ADC	-	-	13.5	25	µA
I_{VREF_OUT}(4)	VREF_OUT output current(6)	-	-	-	1	µA
C_{VREF_OUT}(4)	VREF_OUT output load	-	-	-	50	pF

Table 28. Embedded internal reference voltage(1) (continued)

Symbol	Parameter	Conditions	Min	Typ	Max	Unit
I_{LPBUF}(4)	Consumption of reference voltage buffer for VREF_OUT and COMP	-	-	730	1200	nA
V_{REFINT_DIV1}(4)	1/4 reference voltage	-	24	25	26	% V_{REFINT}
V_{REFINT_DIV2}(4)	1/2 reference voltage	-	49	50	51	
V_{REFINT_DIV3}(4)	3/4 reference voltage	-	74	75	76	

1. Refer to *Table 40: Peripheral current consumption in Stop and Standby mode* for the value of the internal reference current consumption (I_{REFINT}).
2. Guaranteed by test in production.
3. The internal V_{REF} value is individually measured in production and stored in dedicated EEPROM bytes.
4. Guaranteed by design.
5. Shortest sampling time can be determined in the application by multiple iterations.
6. To guarantee less than 1% VREF_OUT deviation.

6.3.4 Supply current characteristics

The current consumption is a function of several parameters and factors such as the operating voltage, temperature, I/O pin loading, device software configuration, operating frequencies, I/O pin switching rate, program location in memory and executed binary code. The current consumption is measured as described in *Figure 13: Current consumption measurement scheme*.

All Run-mode current consumption measurements given in this section are performed with a reduced code that gives a consumption equivalent to Dhrystone 2.1 code if not specified otherwise.

The current consumption values are derived from the tests performed under ambient temperature and V_{DD} supply voltage conditions summarized in *Table 25: General operating conditions* unless otherwise specified.

The MCU is placed under the following conditions:

- All I/O pins are configured in analog input mode
- All peripherals are disabled except when explicitly mentioned
- The Flash memory access time and prefetch is adjusted depending on fHCLK frequency and voltage range to provide the best CPU performance unless otherwise specified.
- When the peripherals are enabled $f_{APB1} = f_{APB2} = f_{APB}$
- When PLL is ON, the PLL inputs are equal to HSI = 16 MHz (if internal clock is used) or HSE = 16 MHz (if HSE bypass mode is used)
- The HSE user clock applied to OSCI_IN input follows the characteristic specified in *Table 42: High-speed external user clock characteristics*
- For maximum current consumption $V_{DD} = V_{DDA} = 3.6$ V is applied to all supply pins
- For typical current consumption $V_{DD} = V_{DDA} = 3.0$ V is applied to all supply pins if not specified otherwise

The parameters given in *Table 50*, *Table 25* and *Table 26* are derived from tests performed under ambient temperature and V_{DD} supply voltage conditions summarized in *Table 25*.

Table 29. Current consumption in Run mode, code with data processing running from Flash

Symbol	Parameter	Conditions		f_{HCLK}	Typ	Max(1)	Unit
I_{DD} (Run from Flash)	Supply current in Run mode, code executed from Flash	$f_{HSE} = f_{HCLK}$ up to 16 MHz included, $f_{HSE} = f_{HCLK}/2$ above 16 MHz (PLL ON)(2)	Range 3, V_{CORE}=1.2 V VOS[1:0]=11	1 MHz	165	230	µA
				2 MHz	290	360	
				4 MHz	555	630	
			Range 2, V_{CORE}=1.5 V, VOS[1:0]=10,	4 MHz	0.665	0.74	mA
				8 MHz	1.3	1.4	
				16 MHz	2.6	2.8	
			Range 1, V_{CORE}=1.8 V, VOS[1:0]=01	8 MHz	1.55	1.7	
				16 MHz	3.1	3.4	
				32 MHz	6.3	6.8	
		MSI clock	Range 3, V_{CORE}=1.2 V, VOS[1:0]=11	65 kHz	36.5	110	µA
				524 kHz	99.5	190	
				4.2 MHz	620	700	
		HSI clock	Range 2, V_{CORE}=1.5 V, VOS[1:0]=10,	16 MHz	2.6	2.9	mA
			Range 1, V_{CORE}=1.8 V, VOS[1:0]=01	32 MHz	6.25	7	

1. Guaranteed by characterization results at 125 °C, unless otherwise specified.
2. Oscillator bypassed (HSEBYP = 1 in RCC_CR register).

Table 30. Current consumption in Run mode vs code type, code with data processing running from Flash

Symbol	Parameter	Conditions			f_{HCLK}	Typ	Unit
I_{DD} (Run from Flash)	Supply current in Run mode, code executed from Flash	$f_{HSE} = f_{HCLK}$ up to 16 MHz included, $f_{HSE} = f_{HCLK}/2$ above 16 MHz (PLL ON)(1)	Range 3, V_{CORE}=1.2 V, VOS[1:0]=11	Dhrystone	4 MHz	555	µA
				CoreMark		585	
				Fibonacci		440	
				while(1)		355	
				while(1), prefetch OFF		353	
			Range 1, V_{CORE}=1.8 V, VOS[1:0]=01	Dhrystone	32 MHz	6.3	mA
				CoreMark		6.3	
				Fibonacci		6.55	
				while(1)		5.4	
				while(1), prefetch OFF		5.2	

1. Oscillator bypassed (HSEBYP = 1 in RCC_CR register).

Figure 14. I_{DD} vs V_{DD}, at T_A= 25/55/85/105 °C, Run mode, code running from Flash memory, Range 2, HSE, 1WS

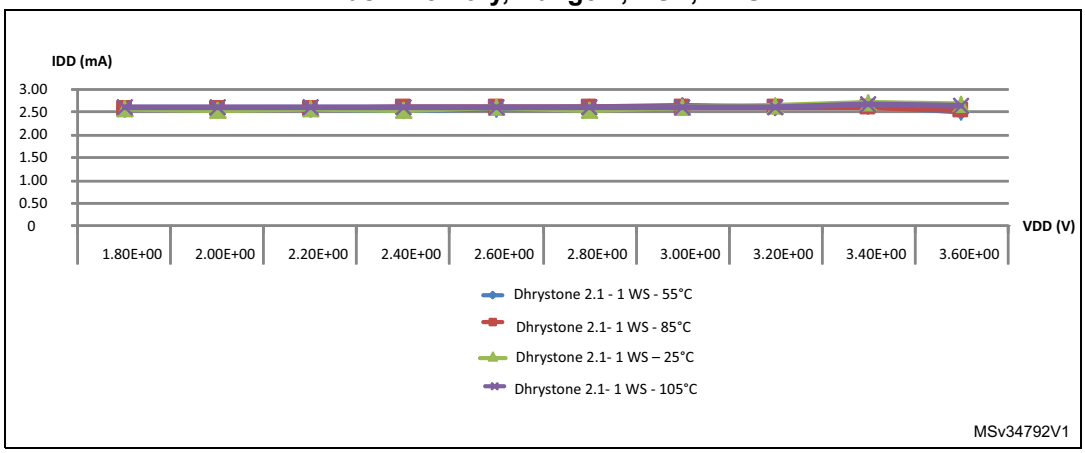

Figure 15. I_{DD} vs V_{DD}, at T_A= 25/55/85/105 °C, Run mode, code running from Flash memory, Range 2, HSI16, 1WS

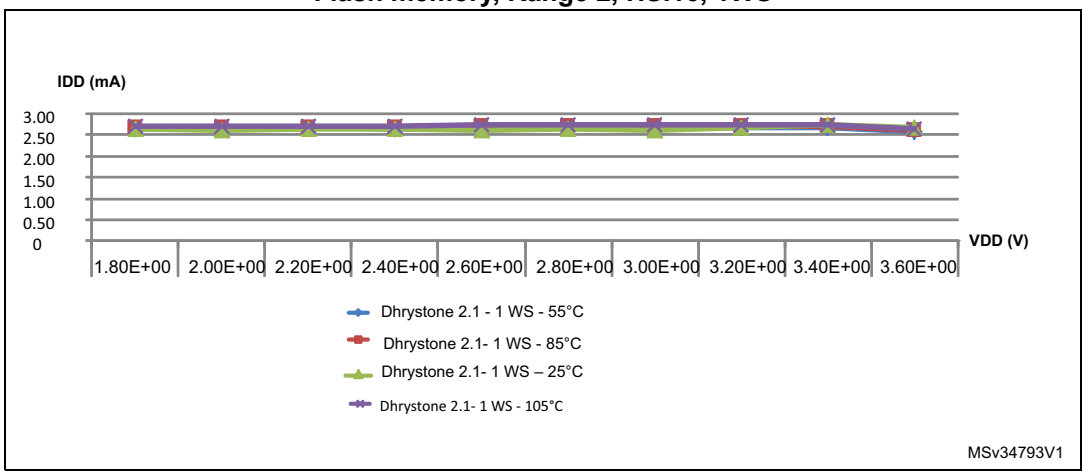

Table 31. Current consumption in Run mode, code with data processing running from RAM

Symbol	Parameter	Conditions		f_{HCLK}	Typ	Max(1)	Unit
I_{DD} (Run from RAM)	Supply current in Run mode, code executed from RAM, Flash switched off	f_{HSE} = f_{HCLK} up to 16 MHz included, f_{HSE} = f_{HCLK}/2 above 16 MHz (PLL ON)(2)	Range 3, V_{CORE}=1.2 V, VOS[1:0]=11	1 MHz	135	170	µA
				2 MHz	240	270	
				4 MHz	450	480	
			Range 2, V_{CORE}=1.5 ,V, VOS[1:0]=10	4 MHz	0.52	0.6	mA
				8 MHz	1	1.2	
				16 MHz	2	2.3	
			Range 1, V_{CORE}=1.8 V, VOS[1:0]=01	8 MHz	1.25	1.4	
				16 MHz	2.45	2.8	
				32 MHz	5.1	5.4	
		MSI clock	Range 3, V_{CORE}=1.2 V, VOS[1:0]=11	65 kHz	34.5	75	µA
				524 kHz	83	120	
				4.2 MHz	485	540	
		HSI16 clock source (16 MHz)	Range 2, V_{CORE}=1.5 V, VOS[1:0]=10	16 MHz	2.1	2.3	mA
			Range 1, V_{CORE}=1.8 V, VOS[1:0]=01	32 MHz	5.1	5.6	

1. Guaranteed by characterization results at 125 °C, unless otherwise specified.
2. Oscillator bypassed (HSEBYP = 1 in RCC_CR register).

Table 32. Current consumption in Run mode vs code type, code with data processing running from RAM(1)

Symbol	Parameter	Conditions			f_{HCLK}	Typ	Unit
I_{DD} (Run from RAM)	Supply current in Run mode, code executed from RAM, Flash switched off	f_{HSE} = f_{HCLK} up to 16 MHz included, f_{HSE} = f_{HCLK}/2 above 16 MHz (PLL ON)(2)	Range 3, V_{CORE}=1.2 V, VOS[1:0]=11	Dhrystone	4 MHz	450	µA
				CoreMark		575	
				Fibonacci		370	
				while(1)		340	
			Range 1, V_{CORE}=1.8 V, VOS[1:0]=01	Dhrystone	32 MHz	5.1	mA
				CoreMark		6.25	
				Fibonacci		4.4	
				while(1)		4.7	

1. Guaranteed by characterization results, unless otherwise specified.
2. Oscillator bypassed (HSEBYP = 1 in RCC_CR register).

Table 33. Current consumption in Sleep mode

Symbol	Parameter	Conditions		f_{HCLK}	Typ	Max(1)	Unit
I_{DD} (Sleep)	Supply current in Sleep mode, Flash OFF	f_{HSE} = f_{HCLK} up to 16 MHz included, f_{HSE} = f_{HCLK}/2 above 16 MHz (PLL ON)(2)	Range 3, V_{CORE}=1.2 V, VOS[1:0]=11	1 MHz	43.5	90	µA
				2 MHz	72	120	
				4 MHz	130	180	
			Range 2, V_{CORE}=1.5 V, VOS[1:0]=10	4 MHz	160	210	
				8 MHz	305	370	
				16 MHz	590	710	
			Range 1, V_{CORE}=1.8 V, VOS[1:0]=01	8 MHz	370	430	
				16 MHz	715	860	
				32 MHz	1650	1900	
		MSI clock	Range 3, V_{CORE}=1.2 V, VOS[1:0]=11	65 kHz	18	65	
				524 kHz	31.5	75	
				4.2 MHz	140	210	
		HSI16 clock source (16 MHz)	Range 2, V_{CORE}=1.5 V, VOS[1:0]=10	16 MHz	665	830	
			Range 1, V_{CORE}=1.8 V, VOS[1:0]=01	32 MHz	1750	2100	
	Supply current in Sleep mode, Flash ON	f_{HSE} = f_{HCLK} up to 16 MHz included, f_{HSE} = f_{HCLK}/2 above 16 MHz (PLL ON)(2)	Range 3, V_{CORE}=1.2 V, VOS[1:0]=11	1 MHz	57.5	130	
				2 MHz	84	170	
				4 MHz	150	280	
			Range 2, $_{CORE}$=1.5 V, VOS[1:0]=10	4 MHz	170	310	
				8 MHz	315	420	
				16 MHz	605	770	
			Range 1, V_{CORE}=1.8 V, VOS[1:0]=01	8 MHz	380	460	
				16 MHz	730	950	
				32 MHz	1650	2400	
		MSI clock	Range 3, V_{CORE}=1.2 V, VOS[1:0]=11	65 kHz	29.5	110	
				524 kHz	44.5	130	
				4.2 MHz	150	270	
		HSI16 clock source (16 MHz)	Range 2, V_{CORE}=1.5 V, VOS[1:0]=10	16 MHz	680	950	
			Range 1, V_{CORE}=1.8 V, VOS[1:0]=01	32 MHz	1750	2100	

1. Guaranteed by characterization results at 125 °C, unless otherwise specified.

2. Oscillator bypassed (HSEBYP = 1 in RCC_CR register).

Table 34. Current consumption in Low-power run mode

Symbol	Parameter	Conditions			Typ	Max(1)	Unit
I_{DD} (LP Run)	Supply current in Low-power run mode	All peripherals OFF, code executed from RAM, Flash switched off, V_{DD} from 1.65 to 3.6 V	MSI clock = 65 kHz, f_{HCLK} = 32 kHz	T_A = − 40 to 25°C	8.5	10	µA
				T_A = 85 °C	11.5	48	
				T_A = 105 °C	15.5	53	
				T_A = 125 °C	27.5	130	
			MSI clock= 65 kHz, f_{HCLK} = 65 kHz	T_A =-40 °C to 25 °C	10	15	
				T_A = 85 °C	15.5	50	
				T_A = 105 °C	19.5	54	
				T_A = 125 °C	31.5	130	
			MSI clock= 131 kHz, f_{HCLK} = 131 kHz	T_A = − 40 to 25°C	20	25	
				T_A = 55 °C	23	50	
				T_A = 85 °C	25.5	55	
				T_A = 105 °C	29.5	64	
				T_A = 125 °C	40	140	
		All peripherals OFF, code executed from Flash, V_{DD} from 1.65 V to 3.6 V	MSI clock= 65 kHz, f_{HCLK} = 32 kHz	T_A = − 40 to 25°C	22	28	
				T_A = 85 °C	26	68	
				T_A = 105 °C	31	75	
				T_A = 125 °C	44	95	
			MSI clock = 65 kHz, f_{HCLK} = 65 kHz	T_A = − 40 to 25°C	27.5	33	
				T_A = 85 °C	31.5	73	
				T_A = 105 °C	36.5	80	
				T_A = 125 °C	49	100	
			MSI clock = 131 kHz, f_{HCLK} = 131 kHz	T_A = − 40 to 25°C	39	46	
				T_A = 55 °C	41	80	
				T_A = 85 °C	44	86	
				T_A = 105 °C	49.5	100	
				T_A = 125 °C	60	120	

1. Guaranteed by characterization results at 125 °C, unless otherwise specified.

Figure 16. I_{DD} vs V_{DD}, at T_A= 25/55/ 85/105/125 °C, Low-power run mode, code running from RAM, Range 3, MSI (Range 0) at 64 KHz, 0 WS

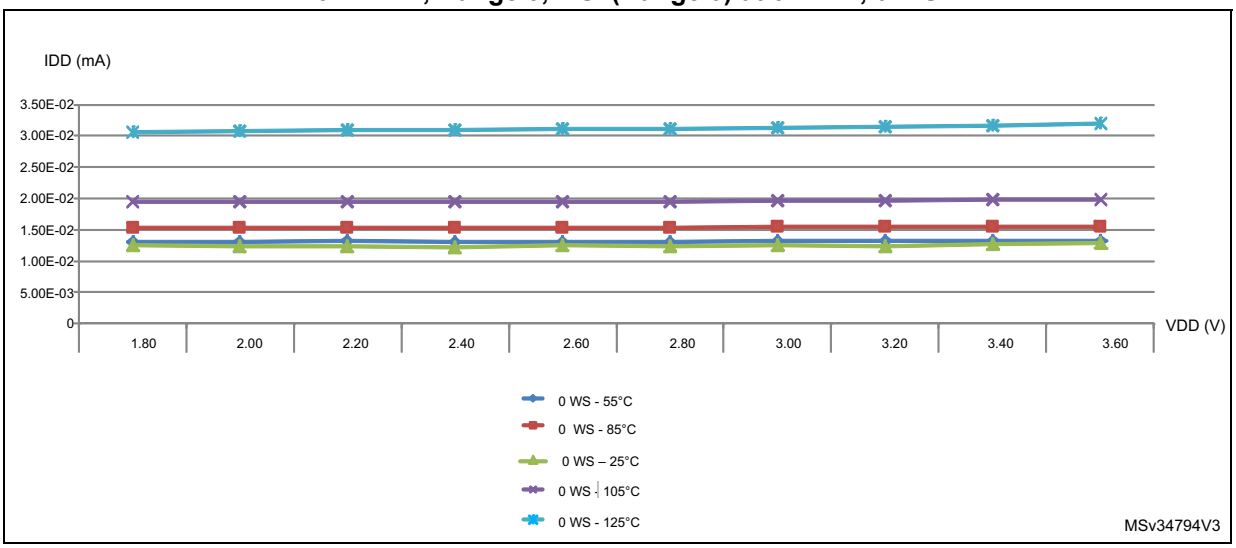

Table 35. Current consumption in Low-power sleep mode

Symbol	Parameter	Conditions			Typ	Max(1)	Unit
I_{DD} (LP Sleep)	Supply current in Low-power sleep mode	All peripherals OFF, V_{DD} from 1.65 to 3.6 V	MSI clock = 65 kHz, f_{HCLK} = 32 kHz, Flash OFF	T_A = − 40 to 25°C	4.7(2)	-	µA
			MSI clock = 65 kHz, f_{HCLK} = 32 kHz, Flash ON	T_A = − 40 to 25°C	17	23	
				T_A = 85 °C	19.5	63	
				T_A = 105 °C	23	69	
				T_A = 125 °C	32.5	90	
			MSI clock =65 kHz, f_{HCLK} = 65 kHz, Flash ON	T_A = − 40 to 25°C	17	23	
				T_A = 85 °C	20	63	
				T_A = 105 °C	23.5	69	
				T_A = 125 °C	32.5	90	
			MSI clock = 131 kHz, f_{HCLK} = 131 kHz, Flash ON	T_A = − 40 to 25°C	19.5	36	
				T_A = 55 °C	20.5	64	
				T_A = 85 °C	22.5	66	
				T_A = 105 °C	26	72	
				T_A = 125 °C	35	95	

1. Guaranteed by characterization results at 125 °C, unless otherwise specified.
2. As the CPU is in Sleep mode, the difference between the current consumption with Flash ON and OFF (nearly 12 µA) is the same whatever the clock frequency.

Table 36. Typical and maximum current consumptions in Stop mode

Symbol	Parameter	Conditions	Typ	Max(1)	Unit
I_{DD} (Stop)	Supply current in Stop mode	T_A = − 40 to 25°C	0.41	1	µA
		T_A = 55°C	0.63	2.1	
		T_A= 85°C	1.7	4.5	
		T_A = 105°C	4	9.6	
		T_A = 125°C	11	24(2)	

1. Guaranteed by characterization results at 125 °C, unless otherwise specified.
2. Guaranteed by test in production.

Figure 17. I_{DD} vs V_{DD}, at T_A= 25/55/ 85/105/125 °C, Stop mode with RTC enabled and running on LSE Low drive

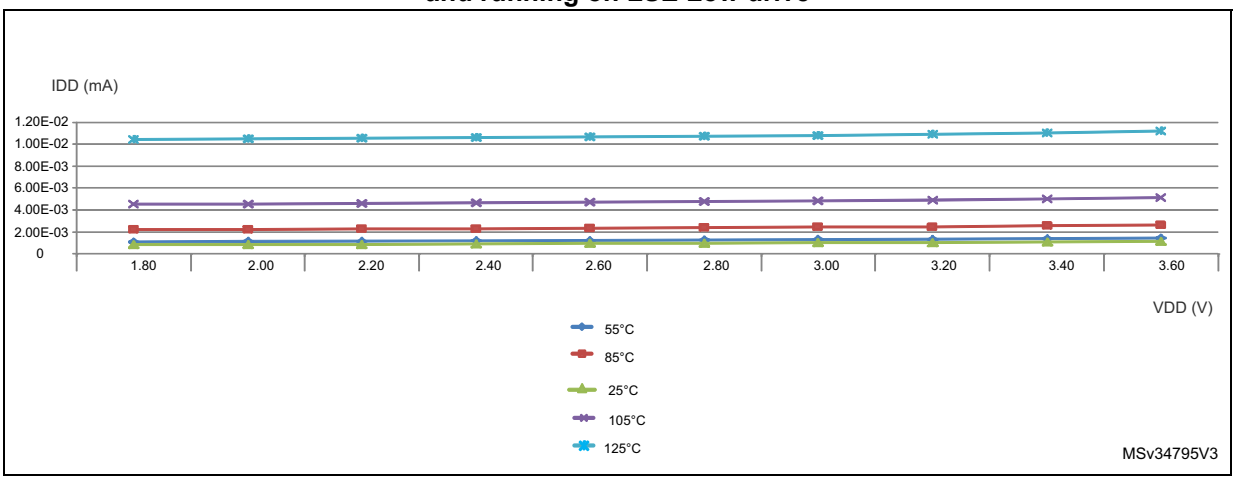

Figure 18. I_{DD} vs V_{DD}, at T_A= 25/55/85/105/125 °C, Stop mode with RTC disabled, all clocks OFF

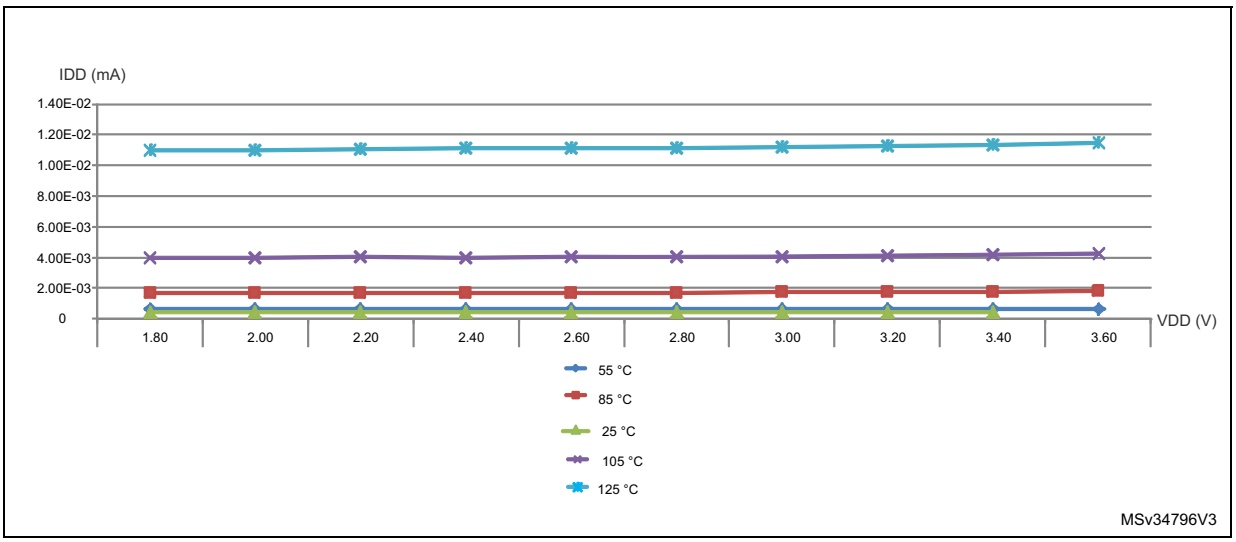

Table 37. Typical and maximum current consumptions in Standby mode

Symbol	Parameter	Conditions		Typ	Max(1)	Unit
I_{DD} (Standby)	Supply current in Standby mode	Independent watchdog and LSI enabled	T_A = − 40 to 25°C	1.3	1.7	µA
			T_A = 55 °C	-	2.9	
			T_A= 85 °C	-	3.3	
			T_A = 105 °C	-	4.1	
			T_A = 125 °C	-	8.5	
		Independent watchdog and LSI OFF	T_A = − 40 to 25°C	0.29	0.6	
			T_A = 55 °C	0.32	0.9	
			T_A = 85 °C	0.5	2.3	
			T_A = 105 °C	0.94	3	
			T_A = 125 °C	2.6	7	

1. Guaranteed by characterization results at 125 °C, unless otherwise specified

Table 38. Average current consumption during Wakeup

Symbol	parameter	System frequency	Current consumption during wakeup	Unit
I_{DD} (Wakeup from Stop)	Supply current during Wakeup from Stop mode	HSI	1	mA
		HSI/4	0,7	
		MSI clock = 4,2 MHz	0,7	
		MSI clock = 1,05 MHz	0,4	
		MSI clock = 65 KHz	0,1	
I_{DD} (Reset)	Reset pin pulled down	-	0,21	
I_{DD} (Power-up)	BOR ON	-	0,23	
I_{DD} (Wakeup from StandBy)	With Fast wakeup set	MSI clock = 2,1 MHz	0,5	
	With Fast wakeup disabled	MSI clock = 2,1 MHz	0,12	

On-chip peripheral current consumption

The current consumption of the on-chip peripherals is given in the following tables. The MCU is placed under the following conditions:

- all I/O pins are in input mode with a static value at V_{DD} or V_{SS} (no load)
- all peripherals are disabled unless otherwise mentioned
- the given value is calculated by measuring the current consumption
  - with all peripherals clocked OFF
  - with only one peripheral clocked on

Table 39. Peripheral current consumption in Run or Sleep mode(1)

Peripheral		Typical consumption, V_{DD} = 3.0 V, T_A = 25 °C				Unit
		Range 1, V_{CORE}=1.8 V VOS[1:0] = 01	Range 2, V_{CORE}=1.5 V VOS[1:0] = 10	Range 3, V_{CORE}=1.2 V VOS[1:0] = 11	Low-power sleep and run	
APB1	CRS	2.5	2	2	2	µA/MHz (f_{HCLK})
	DAC1	4	3.5	3	2.5	
	I2C1	11	9.5	7.5	9	
	I2C2	4	3.5	3	2.5	
	LPTIM1	10	8.5	6.5	8	
	LPUART1	8	6.5	5.5	6	
	SPI2	9	4.5	3.5	4	
	USB	8.5	4.5	4	4.5	
	USART2	14.5	12	9.5	11	
	TIM2	10.5	8.5	7	9	
	TIM6	3.5	3	2.5	2	
	WWDG	3	2	2	2	
APB2	ADC1(2)	5.5	5	3.5	4	µA/MHz (f_{HCLK})
	SPI1	4	3	3	2.5	
	USART1	14.5	11.5	9.5	12	
	TIM21	7.5	6	5	5.5	
	TIM22	7	6	5	6	
	FIREWALL	1.5	1	1	0.5	
	DBGMCU	1.5	1	1	0.5	
	SYSCFG	2.5	2	2	1.5	

Table 39. Peripheral current consumption in Run or Sleep mode(1) (continued)

Peripheral		Typical consumption, V_{DD} = 3.0 V, T_A = 25 °C				Unit
		Range 1, V_{CORE}=1.8 V VOS[1:0] = 01	Range 2, V_{CORE}=1.5 V VOS[1:0] = 10	Range 3, V_{CORE}=1.2 V VOS[1:0] = 11	Low-power sleep and run	
Cortex-M0+ core I/O port	GPIOA	3.5	3	2.5	2.5	µA/MHz (f_{HCLK})
	GPIOB	3.5	2.5	2	2.5	
	GPIOC	8.5	6.5	5.5	7	
	GPIOD	1	0.5	0.5	0.5	
	GPIOH	1.5	1	1	0.5	
AHB	CRC	1.5	1	1	1	µA/MHz (f_{HCLK})
	FLASH	0(3)	0(3)	0(3)	0(3)	
	DMA1	10	8	6.5	8.5	
	RNG	5.5	1	0.5	0.5	
	TSC	3	2.5	2	3	
All enabled		283	225	222.5	212.5	µA/MHz (f_{HCLK})
PWR		2.5	2	2	1	µA/MHz (f_{HCLK})

1. Data based on differential I_{DD} measurement between all peripherals OFF an one peripheral with clock enabled, in the following conditions: f_{HCLK} = 32 MHz (range 1), f_{HCLK} = 16 MHz (range 2), f_{HCLK} = 4 MHz (range 3), f_{HCLK} = 64kHz (Low-power run/sleep), $f_{APB1} = f_{HCLK}$, $f_{APB2} = f_{HCLK}$, default prescaler value for each peripheral. The CPU is in Sleep mode in both cases. No I/O pins toggling. Not tested in production.
2. HSI oscillator is OFF for this measure.
3. Current consumption is negligible and close to 0 µA.

Table 40. Peripheral current consumption in Stop and Standby mode(1)

Symbol	Peripheral	Typical consumption, T_A = 25 °C		Unit
		V_{DD}=1.8 V	V_{DD}=3.0 V	
$I_{DD(PVD / BOR)}$	-	0.7	1.2	µA
I_{REFINT}	-	-	1.4	
-	LSE Low drive(2)	0,1	0,1	
-	LPTIM1, Input 100 Hz	0,01	0,01	
-	LPTIM1, Input 1 MHz	6	6	
-	LPUART1	0,2	0,2	
-	RTC	0,3	0,48	

1. LPTIM peripheral cannot operate in Standby mode.
2. LSE Low drive consumption is the difference between an external clock on OSC32_IN and a quartz between OSC32_IN and OSC32_OUT.-

6.3.5 Wakeup time from low-power mode

The wakeup times given in the following table are measured with the MSI or HSI16 RC oscillator. The clock source used to wake up the device depends on the current operating mode:

- Sleep mode: the clock source is the clock that was set before entering Sleep mode
- Stop mode: the clock source is either the MSI oscillator in the range configured before entering Stop mode, the HSI16 or HSI16/4.
- Standby mode: the clock source is the MSI oscillator running at 2.1 MHz

All timings are derived from tests performed under ambient temperature and V_{DD} supply voltage conditions summarized in *Table 25*.

Table 41. Low-power mode wakeup timings

Symbol	Parameter	Conditions	Typ	Max	Unit
$t_{WUSLEEP}$	Wakeup from Sleep mode	f_{HCLK} = 32 MHz	7	8	Number of clock cycles
$t_{WUSLEEP_LP}$	Wakeup from Low-power sleep mode, f_{HCLK} = 262 kHz	f_{HCLK} = 262 kHz Flash memory enabled	7	8	
		f_{HCLK} = 262 kHz Flash memory switched OFF	9	10	

Table 41. Low-power mode wakeup timings (continued)

Symbol	Parameter	Conditions	Typ	Max	Unit
t_{WUSTOP}	Wakeup from Stop mode, regulator in Run mode	$f_{HCLK} = f_{MSI}$ = 4.2 MHz	5.0	8	µs
		$f_{HCLK} = f_{HSI}$ = 16 MHz	4.9	7	
		$f_{HCLK} = f_{HSI}/4$ = 4 MHz	8.0	11	
	Wakeup from Stop mode, regulator in low-power mode	$f_{HCLK} = f_{MSI}$ = 4.2 MHz Voltage range 1	5.0	8	
		$f_{HCLK} = f_{MSI}$ = 4.2 MHz Voltage range 2	5.0	8	
		$f_{HCLK} = f_{MSI}$ = 4.2 MHz Voltage range 3	5.0	8	
		$f_{HCLK} = f_{MSI}$ = 2.1 MHz	7.3	13	
		$f_{HCLK} = f_{MSI}$ = 1.05 MHz	13	23	
		$f_{HCLK} = f_{MSI}$ = 524 kHz	28	38	
		$f_{HCLK} = f_{MSI}$ = 262 kHz	51	65	
		$f_{HCLK} = f_{MSI}$ = 131 kHz	100	120	
		f_{HCLK} = MSI = 65 kHz	190	260	
		$f_{HCLK} = f_{HSI}$ = 16 MHz	4.9	7	
		$f_{HCLK} = f_{HSI}/4$ = 4 MHz	8.0	11	
	Wakeup from Stop mode, regulator in low-power mode, code running from RAM	$f_{HCLK} = f_{HSI}$ = 16 MHz	4.9	7	
		$f_{HCLK} = f_{HSI}/4$ = 4 MHz	7.9	10	
		$f_{HCLK} = f_{MSI}$ = 4.2 MHz	4.7	8	
$t_{WUSTDBY}$	Wakeup from Standby mode, FWU bit = 1	f_{HCLK} = MSI = 2.1 MHz	65	130	µs
	Wakeup from Standby mode, FWU bit = 0	f_{HCLK} = MSI = 2.1 MHz	2.2	3	ms
$t_{WUUSART}$ $t_{WULPUART}$	Wakeup time required to calculate the maximum USART/LPUART baudrate while waking up from Stop mode using the USART/LPUART	Stop mode, regulator in Run mode	t_{WUSTOP}		µs

6.3.6 External clock source characteristics

High-speed external user clock generated from an external source

In bypass mode the HSE oscillator is switched off and the input pin is a standard GPIO.The external clock signal has to respect the I/O characteristics in *Section 6.3.12*. However, the recommended clock input waveform is shown in *Figure 19*.

Table 42. High-speed external user clock characteristics(1)

Symbol	Parameter	Conditions	Min	Typ	Max	Unit
f_{HSE_ext}	User external clock source frequency	CSS is ON or PLL is used	1	8	32	MHz
		CSS is OFF, PLL not used	0	8	32	MHz
V_{HSEH}	OSC_IN input pin high level voltage	-	$0.7V_{DD}$	-	V_{DD}	V
V_{HSEL}	OSC_IN input pin low level voltage		V_{SS}	-	$0.3V_{DD}$	
$t_{w(HSE)}$ $t_{w(HSE)}$	OSC_IN high or low time		12	-	-	ns
$t_{r(HSE)}$ $t_{f(HSE)}$	OSC_IN rise or fall time		-	-	20	
$C_{in(HSE)}$	OSC_IN input capacitance		-	2.6	-	pF
$DuCy_{(HSE)}$	Duty cycle		45	-	55	%
I_L	OSC_IN Input leakage current	$V_{SS} \le V_{IN} \le V_{DD}$	-	-	±1	µA

1. Guaranteed by design.

Figure 19. High-speed external clock source AC timing diagram

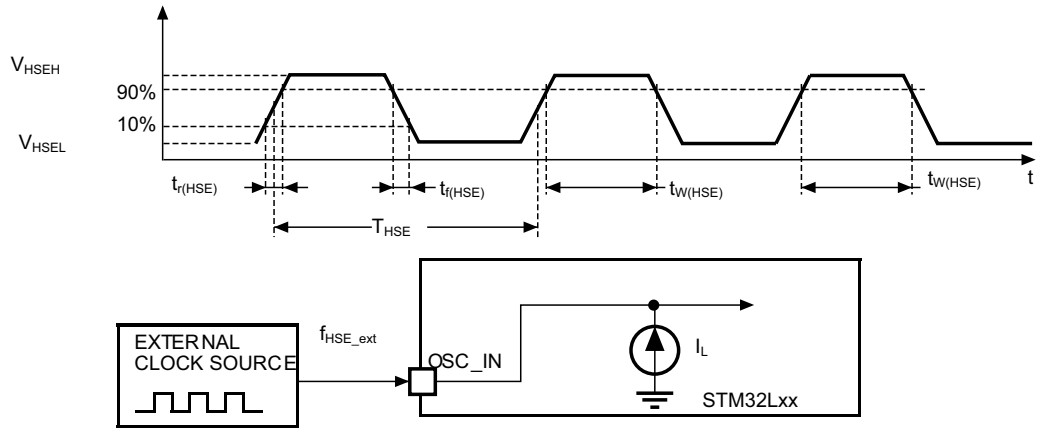

Low-speed external user clock generated from an external source

The characteristics given in the following table result from tests performed using a low-speed external clock source, and under ambient temperature and supply voltage conditions summarized in *Table 25*.

Table 43. Low-speed external user clock characteristics(1)

Symbol	Parameter	Conditions	Min	Typ	Max	Unit
f_{LSE_ext}	User external clock source frequency	-	1	32.768	1000	kHz
V_{LSEH}	OSC32_IN input pin high level voltage		$0.7V_{DD}$	-	V_{DD}	V
V_{LSEL}	OSC32_IN input pin low level voltage		V_{SS}	-	$0.3V_{DD}$	
$t_{w(LSE)}$ $t_{w(LSE)}$	OSC32_IN high or low time		465	-	-	ns
$t_{r(LSE)}$ $t_{f(LSE)}$	OSC32_IN rise or fall time		-	-	10	
$C_{IN(LSE)}$	OSC32_IN input capacitance	-	-	0.6	-	pF
$DuCy_{(LSE)}$	Duty cycle	-	45	-	55	%
I_L	OSC32_IN Input leakage current	$V_{SS} \le V_{IN} \le V_{DD}$	-	-	±1	µA

1. Guaranteed by design, not tested in production

Figure 20. Low-speed external clock source AC timing diagram

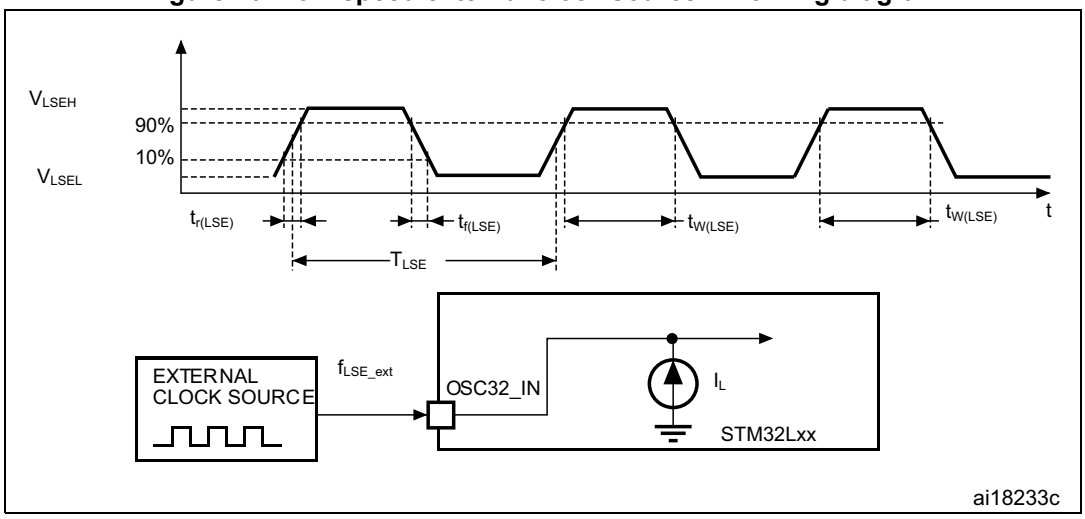

High-speed external clock generated from a crystal/ceramic resonator

The high-speed external (HSE) clock can be supplied with a 1 to 25 MHz crystal/ceramic resonator oscillator. All the information given in this paragraph are based on characterization results obtained with typical external components specified in *Table 44*. In the application, the resonator and the load capacitors have to be placed as close as possible to the oscillator pins in order to minimize output distortion and startup stabilization time. Refer to the crystal resonator manufacturer for more details on the resonator characteristics (frequency, package, accuracy).

Table 44. HSE oscillator characteristics(1)

Symbol	Parameter	Conditions	Min	Typ	Max	Unit
f_{OSC_IN}	Oscillator frequency	-	1		25	MHz
R_F	Feedback resistor	-	-	200	-	kΩ
G_m	Maximum critical crystal transconductance	Startup	-	-	700	µA /V
$t_{SU(HSE)}$ (2)	Startup time	V_{DD} is stabilized	-	2	-	ms

1. Guaranteed by design.
2. Guaranteed by characterization results. $t_{SU(HSE)}$ is the startup time measured from the moment it is enabled (by software) to a stabilized 8 MHz oscillation is reached. This value is measured for a standard crystal resonator and it can vary significantly with the crystal manufacturer.

For C_{L1} and C_{L2}, it is recommended to use high-quality external ceramic capacitors in the 5 pF to 25 pF range (typ.), designed for high-frequency applications, and selected to match the requirements of the crystal or resonator (see *Figure 21*). C_{L1} and C_{L2} are usually the same size. The crystal manufacturer typically specifies a load capacitance which is the series combination of C_{L1} and C_{L2}. PCB and MCU pin capacitance must be included (10 pF can be used as a rough estimate of the combined pin and board capacitance) when sizing C_{L1} and C_{L2}. Refer to the application note AN2867 “Oscillator design guide for ST microcontrollers” available from the ST website *www.st.com*.

Figure 21. HSE oscillator circuit diagram

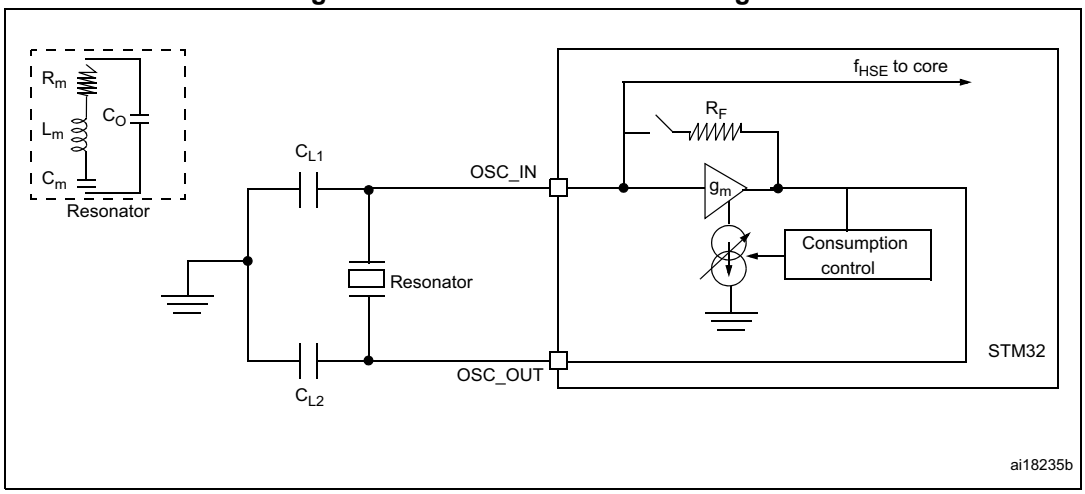

Low-speed external clock generated from a crystal/ceramic resonator

The low-speed external (LSE) clock can be supplied with a 32.768 kHz crystal/ceramic resonator oscillator. All the information given in this paragraph are based on characterization results obtained with typical external components specified in *Table 45*. In the application, the resonator and the load capacitors have to be placed as close as possible to the oscillator pins in order to minimize output distortion and startup stabilization time. Refer to the crystal resonator manufacturer for more details on the resonator characteristics (frequency, package, accuracy).

Table 45. LSE oscillator characteristics(1)

Symbol	Parameter	Conditions(2)	Min(2)	Typ	Max	Unit
f_{LSE}	LSE oscillator frequency		-	32.768	-	kHz
G_m	Maximum critical crystal transconductance	LSEDRV[1:0]=00 lower driving capability	-	-	0.5	µA/V
		LSEDRV[1:0]= 01 medium low driving capability	-	-	0.75	
		LSEDRV[1:0] = 10 medium high driving capability	-	-	1.7	
		LSEDRV[1:0]=11 higher driving capability	-	-	2.7	
$t_{SU(LSE)}$(3)	Startup time	V_{DD} is stabilized	-	2	-	s

1. Guaranteed by design.
2. Refer to the note and caution paragraphs below the table, and to the application note AN2867 “Oscillator design guide for ST microcontrollers”.
3. Guaranteed by characterization results. $t_{SU(LSE)}$ is the startup time measured from the moment it is enabled (by software) to a stabilized 32.768 kHz oscillation is reached. This value is measured for a standard crystal resonator and it can vary significantly with the crystal manufacturer. To increase speed, address a lower-drive quartz with a high- driver mode.

Note: For information on selecting the crystal, refer to the application note AN2867 “Oscillator design guide for ST microcontrollers” available from the ST website www.st.com.

Figure 22. Typical application with a 32.768 kHz crystal

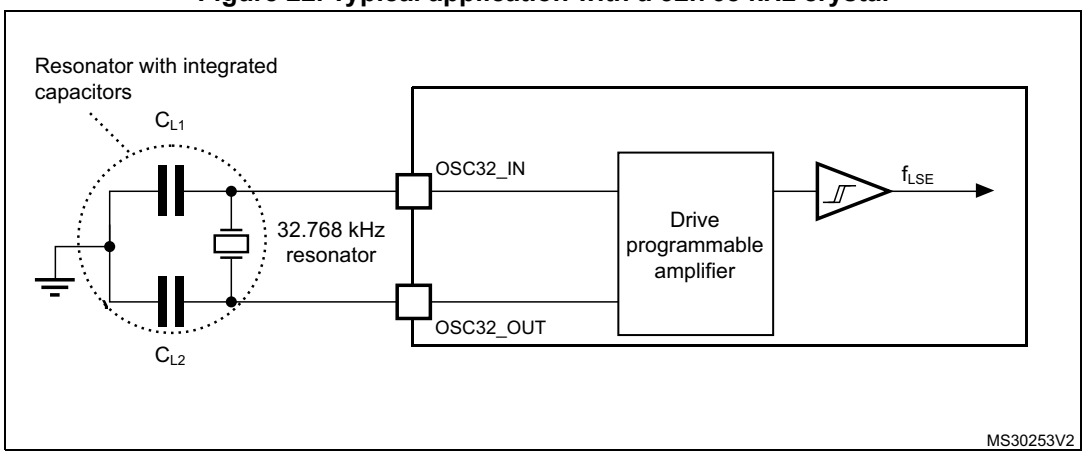

Note: An external resistor is not required between OSC32_IN and OSC32_OUT and it is forbidden to add one.

6.3.7 Internal clock source characteristics

The parameters given in *Table 46* are derived from tests performed under ambient temperature and V_{DD} supply voltage conditions summarized in *Table 25*.

High-speed internal 16 MHz (HSI16) RC oscillator

Table 46. 16 MHz HSI16 oscillator characteristics

Symbol	Parameter	Conditions	Min	Typ	Max	Unit
f_{HSI16}	Frequency	V_{DD} = 3.0 V	-	16	-	MHz
$TRIM^{(1)(2)}$	HSI16 user-trimmed resolution	Trimming code is not a multiple of 16	-	± 0.4	0.7	%
		Trimming code is a multiple of 16	-	-	± 1.5	%
$ACC_{HSI16}^{(2)}$	Accuracy of the factory-calibrated HSI16 oscillator	V_{DDA} = 3.0 V, T_A = 25 °C	-1(3)	-	1(3)	%
		V_{DDA} = 3.0 V, T_A = 0 to 55 °C	-1.5	-	1.5	%
		V_{DDA} = 3.0 V, T_A = -10 to 70 °C	-2	-	2	%
		V_{DDA} = 3.0 V, T_A = -10 to 85 °C	-2.5	-	2	%
		V_{DDA} = 3.0 V, T_A = -10 to 105 °C	-4	-	2	%
		V_{DDA} = 1.65 V to 3.6 V T_A = − 40 to 125 °C	-5.45	-	3.25	%
$t_{SU(HSI16)}^{(2)}$	HSI16 oscillator startup time	-	-	3.7	6	µs
$I_{DD(HSI16)}^{(2)}$	HSI16 oscillator power consumption	-	-	100	140	µA

1. The trimming step differs depending on the trimming code. It is usually negative on the codes which are multiples of 16 (0x00, 0x10, 0x20, 0x30...0xE0).
2. Guaranteed by characterization results.
3. Guaranteed by test in production.

Figure 23. HSI16 minimum and maximum value versus temperature

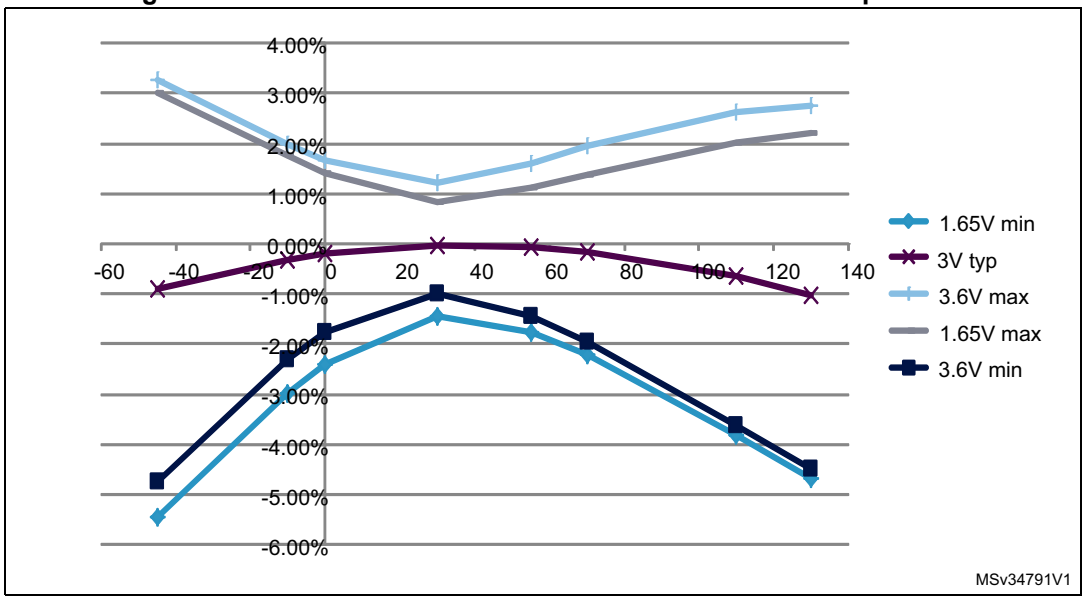

High-speed internal 48 MHz (HSI48) RC oscillator

Table 47. HSI48 oscillator characteristics(1)

Symbol	Parameter	Conditions	Min	Typ	Max	Unit
f_{HSI48}	Frequency		-	48	-	MHz
TRIM	HSI48 user-trimming step		0.09(2)	0.14	0.2(2)	%
$DuCy_{(HSI48)}$	Duty cycle		45(2)	-	55(2)	%
ACC_{HSI48}	Accuracy of the HSI48 oscillator (factory calibrated before CRS calibration)	T_A = 25 °C	-4(3)	-	4(3)	%
$t_{su(HSI48)}$	HSI48 oscillator startup time		-	-	6(2)	µs
$I_{DDA(HSI48)}$	HSI48 oscillator power consumption		-	330	380(2)	µA

1. V_{DDA} = 3.3 V, T_A = –40 to 125 °C unless otherwise specified.
2. Guaranteed by design.
3. Guaranteed by characterization results.

Low-speed internal (LSI) RC oscillator

Table 48. LSI oscillator characteristics

Symbol	Parameter	Min	Typ	Max	Unit
f_{LSI}(1)	LSI frequency	26	38	56	kHz
D_{LSI}(2)	LSI oscillator frequency drift $0°C \le T_A \le 85°C$	-10	-	4	%
$t_{su(LSI)}$(3)	LSI oscillator startup time	-	-	200	µs
$I_{DD(LSI)}$(3)	LSI oscillator power consumption	-	400	510	nA

1. Guaranteed by test in production.
2. This is a deviation for an individual part, once the initial frequency has been measured.
3. Guaranteed by design.

Multi-speed internal (MSI) RC oscillator

Table 49. MSI oscillator characteristics

Symbol	Parameter	Condition	Typ	Max	Unit
f_{MSI}	Frequency after factory calibration, done at V_{DD}= 3.3 V and T_A = 25 °C	MSI range 0	65.5	-	kHz
		MSI range 1	131	-	
		MSI range 2	262	-	
		MSI range 3	524	-	
		MSI range 4	1.05	-	MHz
		MSI range 5	2.1	-	
		MSI range 6	4.2	-	

Table 49. MSI oscillator characteristics (continued)

Symbol	Parameter	Condition	Typ	Max	Unit
ACC_{MSI}	Frequency error after factory calibration	-	±0.5	-	%
$D_{TEMP(MSI)}$(1)	MSI oscillator frequency drift 0 °C ≤ T_A ≤ 85 °C	-	±3	-	%
	MSI oscillator frequency drift V_{DD} = 3.3 V, − 40 °C ≤ T_A ≤ 110 °C	MSI range 0	− 8.9	+7.0	
		MSI range 1	− 7.1	+5.0	
		MSI range 2	− 6.4	+4.0	
		MSI range 3	− 6.2	+3.0	
		MSI range 4	− 5.2	+3.0	
		MSI range 5	− 4.8	+2.0	
		MSI range 6	− 4.7	+2.0	
$D_{VOLT(MSI)}$(1)	MSI oscillator frequency drift 1.65 V ≤ V_{DD} ≤ 3.6 V, T_A = 25 °C	-	-	2.5	%/V
$I_{DD(MSI)}$(2)	MSI oscillator power consumption	MSI range 0	0.75	-	µA
		MSI range 1	1	-	
		MSI range 2	1.5	-	
		MSI range 3	2.5	-	
		MSI range 4	4.5	-	
		MSI range 5	8	-	
		MSI range 6	15	-	
$t_{SU(MSI)}$	MSI oscillator startup time	MSI range 0	30	-	µs
		MSI range 1	20	-	
		MSI range 2	15	-	
		MSI range 3	10	-	
		MSI range 4	6	-	
		MSI range 5	5	-	
		MSI range 6, Voltage range 1 and 2	3.5	-	
		MSI range 6, Voltage range 3	5	-	

Table 49. MSI oscillator characteristics (continued)

Symbol	Parameter	Condition	Typ	Max	Unit
$t_{STAB(MSI)}$(2)	MSI oscillator stabilization time	MSI range 0	-	40	µs
		MSI range 1	-	20	
		MSI range 2	-	10	
		MSI range 3	-	4	
		MSI range 4	-	2.5	
		MSI range 5	-	2	
		MSI range 6, Voltage range 1 and 2	-	2	
		MSI range 3, Voltage range 3	-	3	
$f_{OVER(MSI)}$	MSI oscillator frequency overshoot	Any range to range 5	-	4	MHz
		Any range to range 6	-	6	

1. This is a deviation for an individual part, once the initial frequency has been measured.
2. Guaranteed by characterization results.

6.3.8 PLL characteristics

The parameters given in *Table 50* are derived from tests performed under ambient temperature and V_{DD} supply voltage conditions summarized in *Table 25*.

Table 50. PLL characteristics

Symbol	Parameter	Value			Unit
		Min	Typ	Max(1)	
f_{PLL_IN}	PLL input clock(2)	2	-	24	MHz
	PLL input clock duty cycle	45	-	55	%
f_{PLL_OUT}	PLL output clock	2	-	32	MHz
t_{LOCK}	PLL input = 16 MHz PLL VCO = 96 MHz	-	115	160	µs
Jitter	Cycle-to-cycle jitter	-		±600	ps
I_{DDA}(PLL)	Current consumption on V_{DDA}	-	220	450	µA
I_{DD}(PLL)	Current consumption on V_{DD}	-	120	150	

1. Guaranteed by characterization results.
2. Take care of using the appropriate multiplier factors so as to have PLL input clock values compatible with the range defined by f_{PLL_OUT}.

6.3.9 Memory characteristics

RAM memory

Table 51. RAM and hardware registers

Symbol	Parameter	Conditions	Min	Typ	Max	Unit
VRM	Data retention mode(1)	STOP mode (or RESET)	1.65	-	-	V

1. Minimum supply voltage without losing data stored in RAM (in Stop mode or under Reset) or in hardware registers (only in Stop mode).

Flash memory and data EEPROM

Table 52. Flash memory and data EEPROM characteristics

Symbol	Parameter	Conditions	Min	Typ	Max(1)	Unit
V_{DD}	Operating voltage Read / Write / Erase	-	1.65	-	3.6	V
t_{prog}	Programming time for word or half-page	Erasing	-	3.28	3.94	ms
		Programming	-	3.28	3.94	
I_{DD}	Average current during the whole programming / erase operation	T_A = 25 °C, V_{DD} = 3.6 V	-	500	700	µA
	Maximum current (peak) during the whole programming / erase operation		-	1.5	2.5	mA

1. Guaranteed by design.

Table 53. Flash memory and data EEPROM endurance and retention

Symbol	Parameter	Conditions	Value	Unit
			Min(1)	
N_{CYC}(2)	Cycling (erase / write) Program memory	T_A = -40°C to 105 °C	10	kcycles
	Cycling (erase / write) EEPROM data memory		100	
	Cycling (erase / write) Program memory	T_A = -40°C to 125 °C	0.2	
	Cycling (erase / write) EEPROM data memory		2	

Table 53. Flash memory and data EEPROM endurance and retention (continued)

Symbol	Parameter	Conditions	Value	Unit
			Min(1)	
t_{RET}(2)	Data retention (program memory) after 10 kcycles at T_A = 85 °C	T_{RET} = +85 °C	30	years
	Data retention (EEPROM data memory) after 100 kcycles at T_A = 85 °C		30	
	Data retention (program memory) after 10 kcycles at T_A = 105 °C	T_{RET} = +105 °C	10	
	Data retention (EEPROM data memory) after 100 kcycles at T_A = 105 °C			
	Data retention (program memory) after 200 cycles at T_A = 125 °C	T_{RET} = +125 °C		
	Data retention (EEPROM data memory) after 2 kcycles at T_A = 125 °C			

1. Guaranteed by characterization results.
2. Characterization is done according to JEDEC JESD22-A117.

6.3.10 EMC characteristics

Susceptibility tests are performed on a sample basis during device characterization.

Functional EMS (electromagnetic susceptibility)

While a simple application is executed on the device (toggling 2 LEDs through I/O ports). the device is stressed by two electromagnetic events until a failure occurs. The failure is indicated by the LEDs:

- **Electrostatic discharge (ESD)** (positive and negative) is applied to all device pins until a functional disturbance occurs. This test is compliant with the IEC 61000-4-2 standard.
- **FTB**: A Burst of Fast Transient voltage (positive and negative) is applied to V_{DD} and V_{SS} through a 100 pF capacitor, until a functional disturbance occurs. This test is compliant with the IEC 61000-4-4 standard.

A device reset allows normal operations to be resumed.

The test results are given in *Table 54*. They are based on the EMS levels and classes defined in application note AN1709.

Table 54. EMS characteristics

Symbol	Parameter	Conditions	Level/ Class
V_{FESD}	Voltage limits to be applied on any I/O pin to induce a functional disturbance	V_{DD} = 3.3 V, LQFP64, T_A = +25 °C, f_{HCLK} = 32 MHz conforms to IEC 61000-4-2	3B
V_{EFTB}	Fast transient voltage burst limits to be applied through 100 pF on V_{DD} and V_{SS} pins to induce a functional disturbance	V_{DD} = 3.3 V, LQFP64, T_A = +25 °C, f_{HCLK} = 32 MHz conforms to IEC 61000-4-4	4A

Designing hardened software to avoid noise problems

EMC characterization and optimization are performed at component level with a typical application environment and simplified MCU software. It should be noted that good EMC performance is highly dependent on the user application and the software in particular.

Therefore it is recommended that the user applies EMC software optimization and prequalification tests in relation with the EMC level requested for his application.

Software recommendations

The software flowchart must include the management of runaway conditions such as:

- Corrupted program counter
- Unexpected reset
- Critical data corruption (control registers...)

Prequalification trials

Most of the common failures (unexpected reset and program counter corruption) can be reproduced by manually forcing a low state on the NRST pin or the oscillator pins for 1 second.

To complete these trials, ESD stress can be applied directly on the device, over the range of specification values. When unexpected behavior is detected, the software can be hardened to prevent unrecoverable errors occurring (see application note AN1015).

Electromagnetic Interference (EMI)

The electromagnetic field emitted by the device are monitored while a simple application is executed (toggling 2 LEDs through the I/O ports). This emission test is compliant with IEC 61967-2 standard which specifies the test board and the pin loading.

Table 55. EMI characteristics

Symbol	Parameter	Conditions	Monitored frequency band	Max vs. f_{osc}/f_{CPU}			Unit
				8 MHz/ 4 MHz	8 MHz/ 16 MHz	8 MHz/ 32 MHz	
S_{EMI}	Peak level	V_{DD} = 3.6 V, T_A = 25 °C, compliant with IEC 61967-2	0.1 to 30 MHz	-21	-15	-12	dBµV
			30 to 130 MHz	-14	-12	-1	
			130 MHz to 1GHz	-10	-11	-7	
			EMI Level	1	1	1	-

6.3.11 Electrical sensitivity characteristics

Based on three different tests (ESD, LU) using specific measurement methods, the device is stressed in order to determine its performance in terms of electrical sensitivity.

Electrostatic discharge (ESD)

Electrostatic discharges (a positive then a negative pulse separated by 1 second) are applied to the pins of each sample according to each pin combination. The sample size depends on the number of supply pins in the device (3 parts × (n+1) supply pins). This test conforms to the ANSI/JEDEC standard.

Table 56. ESD absolute maximum ratings

Symbol	Ratings	Conditions	Class	Maximum value(1)	Unit
$V_{ESD(HBM)}$	Electrostatic discharge voltage (human body model)	T_A = +25 °C, conforming to ANSI/JEDEC JS-001	2	2000	V
$V_{ESD(CDM)}$	Electrostatic discharge voltage (charge device model)	T_A = +25 °C, conforming to ANSI/ESD STM5.3.1.	C4	500	

1. Guaranteed by characterization results.

Static latch-up

Two complementary static tests are required on six parts to assess the latch-up performance:

- A supply overvoltage is applied to each power supply pin
- A current injection is applied to each input, output and configurable I/O pin

These tests are compliant with EIA/JESD 78A IC latch-up standard.

Table 57. Electrical sensitivities

Symbol	Parameter	Conditions	Class
LU	Static latch-up class	T_A = +125 °C conforming to JESD78A	II level A

6.3.12 I/O current injection characteristics

As a general rule, current injection to the I/O pins, due to external voltage below V_{SS} or above V_{DD} (for standard pins) should be avoided during normal product operation. However, in order to give an indication of the robustness of the microcontroller in cases when abnormal injection accidentally happens, susceptibility tests are performed on a sample basis during device characterization.

Functional susceptibility to I/O current injection

While a simple application is executed on the device, the device is stressed by injecting current into the I/O pins programmed in floating input mode. While current is injected into the I/O pin, one at a time, the device is checked for functional failures.

The failure is indicated by an out of range parameter: ADC error above a certain limit (higher than 5 LSB TUE), out of conventional limits of induced leakage current on adjacent pins (out of –5 µA/+0 µA range), or other functional failure (for example reset occurrence oscillator frequency deviation).

The test results are given in the *Table 58*.

Table 58. I/O current injection susceptibility

Symbol	Description	Functional susceptibility		Unit
		Negative injection	Positive injection	
I_{INJ}	Injected current on BOOT0	-0	NA(1)	mA
	Injected current on PA0, PA4, PA5, PA11, PA12, PC15, PH0 and PH1	-5	0	
	Injected current on any other FT, FTf pins	-5 (2)	NA(1)	
	Injected current on any other pins	-5 (2)	+5	

1. Current injection is not possible.
2. It is recommended to add a Schottky diode (pin to ground) to analog pins which may potentially inject negative currents.

6.3.13 I/O port characteristics

General input/output characteristics

Unless otherwise specified, the parameters given in *Table 59* are derived from tests performed under the conditions summarized in *Table 25*. All I/Os are CMOS and TTL compliant.

Note: For information on GPIO configuration, refer to application note AN4899 "STM32 GPIO configuration for hardware settings and low-power consumption" available from the ST website www.st.com.

Table 59. I/O static characteristics

Symbol	Parameter	Conditions	Min	Typ	Max	Unit
V_{IL}	Input low level voltage	TC, FT, FTf, RST I/Os	-	-	$0.3V_{DD}$	V
		BOOT0 pin	-	-	$0.14V_{DD}$ (1)	
V_{IH}	Input high level voltage	All I/Os	$0.7\ V_{DD}$	-	-	
V_{hys}	I/O Schmitt trigger voltage hysteresis (2)	Standard I/Os	-	$10\%\ V_{DD}$ (3)	-	
		BOOT0 pin	-	0.01	-	
I_{lkg}	Input leakage current (4)	$V_{SS} \le V_{IN} \le V_{DD}$ All I/Os except for PA11, PA12, BOOT0 and FTf I/Os	-	-	±50	nA
		$V_{SS} \le V_{IN} \le V_{DD}$, PA11 and PA12 I/Os	-	-	-50/+250	
		$V_{SS} \le V_{IN} \le V_{DD}$ FTf I/Os	-	-	±100	
		$V_{DD} \le V_{IN} \le 5$ V All I/Os except for PA11, PA12, BOOT0 and FTf I/Os	-	-	200	nA
		$V_{DD} \le V_{IN} \le 5$ V FTf I/Os	-	-	500	
		$V_{DD} \le V_{IN} \le 5$ V PA11, PA12 and BOOT0	-	-	10	µA
R_{PU}	Weak pull-up equivalent resistor(5)	$V_{IN} = V_{SS}$	25	45	65	kΩ
R_{PD}	Weak pull-down equivalent resistor(5)	$V_{IN} = V_{DD}$	25	45	65	kΩ
C_{IO}	I/O pin capacitance	-	-	5	-	pF

1. Guaranteed by characterization.
2. Hysteresis voltage between Schmitt trigger switching levels. Guaranteed by characterization results.
3. With a minimum of 200 mV. Guaranteed by characterization results.
4. The max. value may be exceeded if negative current is injected on adjacent pins.
5. Pull-up and pull-down resistors are designed with a true resistance in series with a switchable PMOS/NMOS. This MOS/NMOS contribution to the series resistance is minimum (~10% order).

Figure 24. V_{IH}/V_{IL} versus VDD (CMOS I/Os)

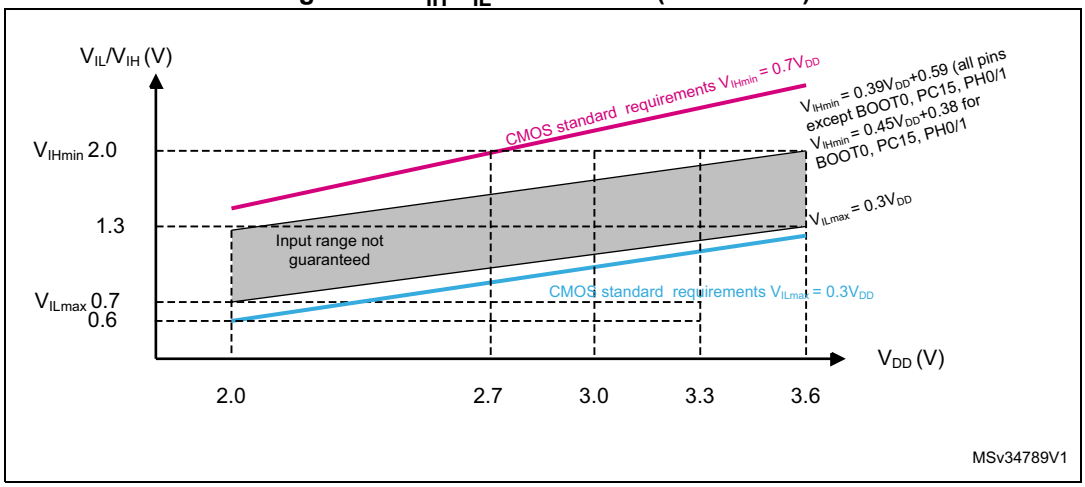

Figure 25. V_{IH}/V_{IL} versus VDD (TTL I/Os)

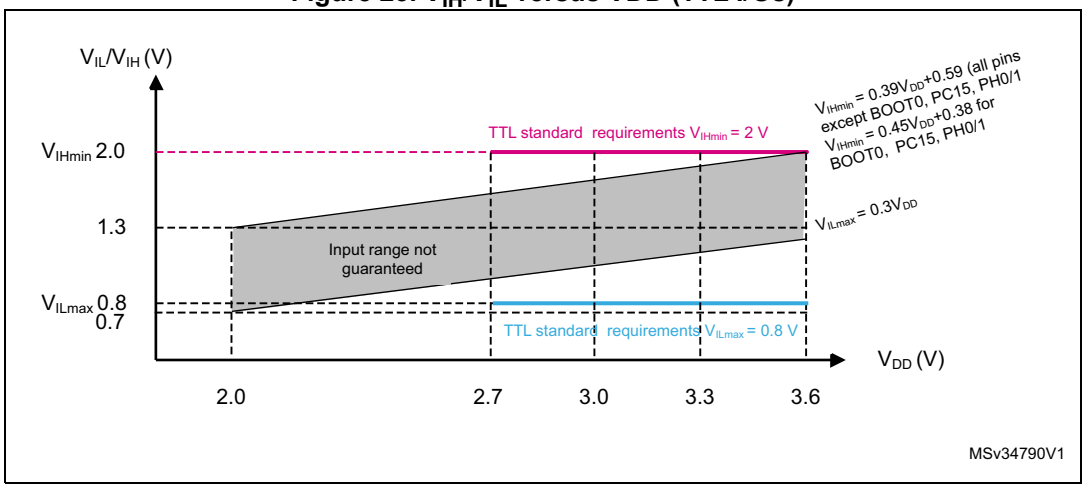

Output driving current

The GPIOs (general purpose input/outputs) can sink or source up to ±8 mA, and sink or source up to ±15 mA with the non-standard V_{OL}/V_{OH} specifications given in *Table 60*.

In the user application, the number of I/O pins which can drive current must be limited to respect the absolute maximum rating specified in *Section 6.2*:

- The sum of the currents sourced by all the I/Os on $V_{DD,}$ plus the maximum Run consumption of the MCU sourced on $V_{DD,}$ cannot exceed the absolute maximum rating $I_{VDD(\Sigma)}$ (see *Table 23*).
- The sum of the currents sunk by all the I/Os on V_{SS} plus the maximum Run consumption of the MCU sunk on V_{SS} cannot exceed the absolute maximum rating $I_{VSS(\Sigma)}$ (see *Table 23*).

Output voltage levels

Unless otherwise specified, the parameters given in *Table 60* are derived from tests performed under ambient temperature and V_{DD} supply voltage conditions summarized in *Table 25*. All I/Os are CMOS and TTL compliant.

Table 60. Output voltage characteristics

Symbol	Parameter	Conditions	Min	Max	Unit
V_{OL}(1)	Output low level voltage for an I/O pin	CMOS port(2), I_{IO} = +8 mA 2.7 V ≤ V_{DD} ≤ 3.6 V	-	0.4	V
V_{OH}(3)	Output high level voltage for an I/O pin		V_{DD}-0.4	-	
V_{OL} (1)	Output low level voltage for an I/O pin	TTL port(2), I_{IO} =+ 8 mA 2.7 V ≤ V_{DD} ≤ 3.6 V	-	0.4	
V_{OH} (3)(4)	Output high level voltage for an I/O pin	TTL port(2), I_{IO} = -6 mA 2.7 V ≤ V_{DD} ≤ 3.6 V	2.4	-	
V_{OL}(1)(4)	Output low level voltage for an I/O pin	I_{IO} = +15 mA 2.7 V ≤ V_{DD} ≤ 3.6 V	-	1.3	
V_{OH}(3)(4)	Output high level voltage for an I/O pin	I_{IO} = -15 mA 2.7 V ≤ V_{DD} ≤ 3.6 V	V_{DD}-1.3	-	
V_{OL}(1)(4)	Output low level voltage for an I/O pin	I_{IO} = +4 mA 1.65 V ≤ V_{DD} < 3.6 V	-	0.45	
V_{OH}(3)(4)	Output high level voltage for an I/O pin	I_{IO} = -4 mA 1.65 V ≤ V_{DD} ≤ 3.6 V	V_{DD}-0.45	-	
V_{OLFM+}(1)(4)	Output low level voltage for an FTf I/O pin in Fm+ mode	I_{IO} = 20 mA 2.7 V ≤ V_{DD} ≤ 3.6 V	-	0.4	
		I_{IO} = 10 mA 1.65 V ≤ V_{DD} ≤ 3.6 V	-	0.4	

1. The I_{IO} current sunk by the device must always respect the absolute maximum rating specified in *Table 23*. The sum of the currents sunk by all the I/Os (I/O ports and control pins) must always be respected and must not exceed $\Sigma I_{IO(PIN)}$.
2. TTL and CMOS outputs are compatible with JEDEC standards JESD36 and JESD52.
3. The I_{IO} current sourced by the device must always respect the absolute maximum rating specified in *Table 23*. The sum of the currents sourced by all the I/Os (I/O ports and control pins) must always be respected and must not exceed $\Sigma I_{IO(PIN)}$.
4. Guaranteed by characterization results.

Input/output AC characteristics

The definition and values of input/output AC characteristics are given in *Figure 26* and *Table 61*, respectively.

Unless otherwise specified, the parameters given in *Table 61* are derived from tests performed under ambient temperature and V_{DD} supply voltage conditions summarized in *Table 25*.

Table 61. I/O AC characteristics(1)

OSPEEDRx[1:0] bit value(1)	Symbol	Parameter	Conditions	Min	Max(2)	Unit
00	$f_{max(IO)out}$	Maximum frequency(3)	C_L = 50 pF, V_{DD} = 2.7 V to 3.6 V	-	400	kHz
			C_L = 50 pF, V_{DD} = 1.65 V to 2.7 V	-	100	
	$t_{f(IO)out}$ $t_{r(IO)out}$	Output rise and fall time	C_L = 50 pF, V_{DD} = 2.7 V to 3.6 V	-	125	ns
			C_L = 50 pF, V_{DD} = 1.65 V to 2.7 V	-	320	
01	$f_{max(IO)out}$	Maximum frequency(3)	C_L = 50 pF, V_{DD} = 2.7 V to 3.6 V	-	2	MHz
			C_L = 50 pF, V_{DD} = 1.65 V to 2.7 V	-	0.6	
	$t_{f(IO)out}$ $t_{r(IO)out}$	Output rise and fall time	C_L = 50 pF, V_{DD} = 2.7 V to 3.6 V	-	30	ns
			C_L = 50 pF, V_{DD} = 1.65 V to 2.7 V	-	65	
10	$F_{max(IO)out}$	Maximum frequency(3)	C_L = 50 pF, V_{DD} = 2.7 V to 3.6 V	-	10	MHz
			C_L = 50 pF, V_{DD} = 1.65 V to 2.7 V	-	2	
	$t_{f(IO)out}$ $t_{r(IO)out}$	Output rise and fall time	C_L = 50 pF, V_{DD} = 2.7 V to 3.6 V	-	13	ns
			C_L = 50 pF, V_{DD} = 1.65 V to 2.7 V	-	28	
11	$F_{max(IO)out}$	Maximum frequency(3)	C_L = 30 pF, V_{DD} = 2.7 V to 3.6 V	-	35	MHz
			C_L = 50 pF, V_{DD} = 1.65 V to 2.7 V	-	10	
	$t_{f(IO)out}$ $t_{r(IO)out}$	Output rise and fall time	C_L = 30 pF, V_{DD} = 2.7 V to 3.6 V	-	6	ns
			C_L = 50 pF, V_{DD} = 1.65 V to 2.7 V	-	17	
Fm+ configuration(4)	$f_{max(IO)out}$	Maximum frequency(3)	C_L = 50 pF, V_{DD} = 2.5 V to 3.6 V	-	1	MHz
	$t_{f(IO)out}$	Output fall time		-	10	ns
	$t_{r(IO)out}$	Output rise time		-	30	
	$f_{max(IO)out}$	Maximum frequency(3)	C_L = 50 pF, V_{DD} = 1.65 V to 3.6 V	-	350	KHz
	$t_{f(IO)out}$	Output fall time		-	15	ns
	$t_{r(IO)out}$	Output rise time		-	60	
-	t_{EXTIpw}	Pulse width of external signals detected by the EXTI controller	-	8	-	ns

1. The I/O speed is configured using the OSPEEDRx[1:0] bits. Refer to the line reference manual for a description of GPIO Port configuration register.
2. Guaranteed by design.
3. The maximum frequency is defined in *Figure 26*.
4. When Fm+ configuration is set, the I/O speed control is bypassed. Refer to the line reference manual for a detailed description of Fm+ I/O configuration.

Figure 26. I/O AC characteristics definition

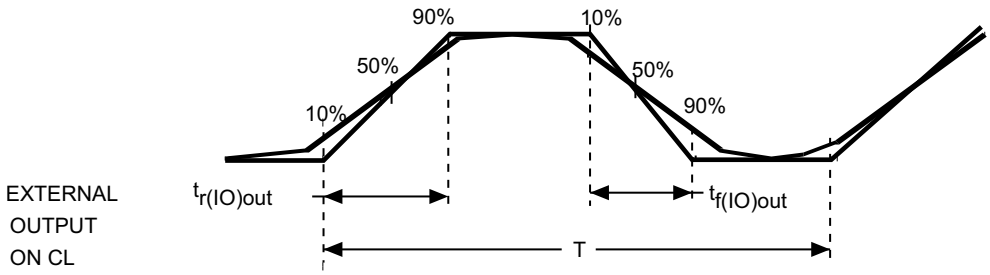

Maximum frequency is achieved if (t_r + t_f) ≤ (2/3)T and if the duty cycle is (45-55%) when loaded by CL specified in the table " *I/O AC characteristics*".

ai14131d

6.3.14 NRST pin characteristics

The NRST pin input driver uses CMOS technology. It is connected to a permanent pull-up resistor, R_{PU} , except when it is internally driven low (see *Table 62*).

Unless otherwise specified, the parameters given in *Table 62* are derived from tests performed under ambient temperature and V_{DD} supply voltage conditions summarized in *Table 25*.

Table 62. NRST pin characteristics

Symbol	Parameter	Conditions	Min	Typ	Max	Unit
$V_{IL(NRST)}$(1)	NRST input low level voltage	-	V_{SS}	-	0.8	V
$V_{IH(NRST)}$(1)	NRST input high level voltage	-	1.4	-	V_{DD}	
$V_{OL(NRST)}$(1)	NRST output low level voltage	I_{OL} = 2 mA 2.7 V < V_{DD} < 3.6 V	-	-	0.4	
		I_{OL} = 1.5 mA 1.65 V < V_{DD} < 2.7 V	-	-		
$V_{hys(NRST)}$(1)	NRST Schmitt trigger voltage hysteresis	-	-	10%V_{DD}(2)	-	mV
R_{PU}	Weak pull-up equivalent resistor(3)	V_{IN} = V_{SS}	25	45	65	kΩ
$V_{F(NRST)}$(1)	NRST input filtered pulse	-	-	-	50	ns
$V_{NF(NRST)}$(1)	NRST input not filtered pulse	-	350	-	-	ns

1. Guaranteed by design.
2. 200 mV minimum value
3. The pull-up is designed with a true resistance in series with a switchable PMOS. This PMOS contribution to the series resistance is around 10%.

Figure 27. Recommended NRST pin protection

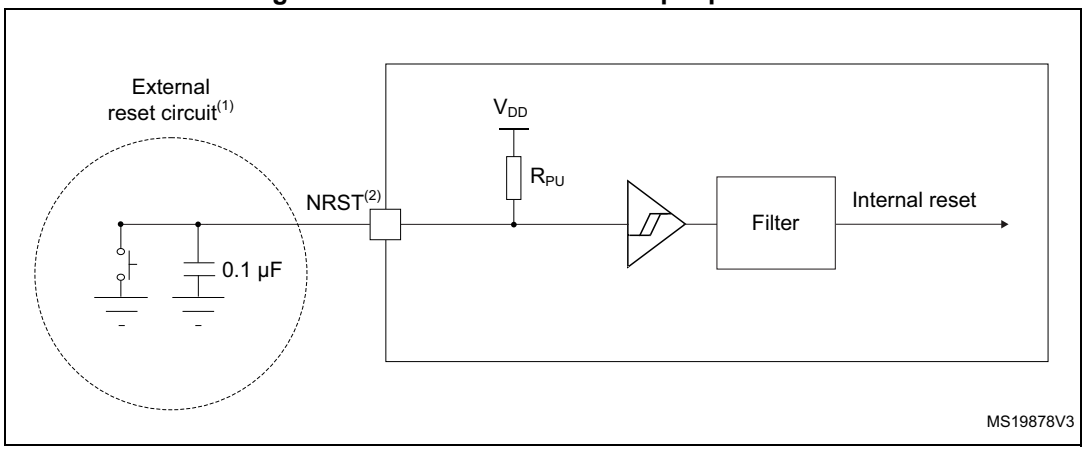

1. The reset network protects the device against parasitic resets.
2. The external capacitor must be placed as close as possible to the device.
3. The user must ensure that the level on the NRST pin can go below the $V_{IL(NRST)}$ max level specified in *Table 62*. Otherwise the reset will not be taken into account by the device.

6.3.15 12-bit ADC characteristics

Unless otherwise specified, the parameters given in *Table 63* are derived from tests performed under ambient temperature, f_{PCLK} frequency and V_{DDA} supply voltage conditions summarized in *Table 25: General operating conditions*.

Note: It is recommended to perform a calibration after each power-up.

Table 63. ADC characteristics

Symbol	Parameter	Conditions	Min	Typ	Max	Unit
V_{DDA}	Analog supply voltage for ADC ON	Fast channel	1.65	-	3.6	V
		Standard channel	1.75(1)	-	3.6	
$I_{DDA\ (ADC)}$	Current consumption of the ADC on $V_{DDA}$and V_{REF+}	1.14 Msps	-	200	-	µA
		10 ksps	-	40	-	
	Current consumption of the ADC on V_{DD}(2)	1.14 Msps	-	70	-	
		10 ksps	-	1	-	
f_{ADC}	ADC clock frequency	Voltage scaling Range 1	0.14	-	16	MHz
		Voltage scaling Range 2	0.14	-	8	
		Voltage scaling Range 3	0.14	-	4	
f_S(3)	Sampling rate	12-bit resolution	0.01	-	1.14	MHz
f_{TRIG}(3)	External trigger frequency	f_{ADC} = 16 MHz, 12-bit resolution	-	-	941	kHz
		-	-	-	17	$1/f_{ADC}$
V_{AIN}	Conversion voltage range	-	0	-		V
R_{AIN}(3)	External input impedance	See *Equation 1* and *Table 64* for details	-	-	50	kΩ

Table 63. ADC characteristics (continued)

Symbol	Parameter	Conditions	Min	Typ	Max	Unit
R_{ADC}(3)(4)	Sampling switch resistance	-	-	-	1	kΩ
C_{ADC}(3)	Internal sample and hold capacitor	-	-	-	8	pF
t_{CAL}(3)(5)	Calibration time	f_{ADC} = 16 MHz	5.2			µs
		-	83			$1/f_{ADC}$
$W_{LATENCY}$(6)	ADC_DR register write latency	ADC clock = HSI16	1.5 ADC cycles + 2 f_{PCLK} cycles	-	1.5 ADC cycles + 3 f_{PCLK} cycles	-
		ADC clock = PCLK/2	-	4.5	-	f_{PCLK} cycle
		ADC clock = PCLK/4	-	8.5	-	f_{PCLK} cycle
t_{latr}(3)	Trigger conversion latency	$f_{ADC} = f_{PCLK}/2$ = 16 MHz	0.266			µs
		$f_{ADC} = f_{PCLK}/2$	8.5			$1/f_{PCLK}$
		$f_{ADC} = f_{PCLK}/4$ = 8 MHz	0.516			µs
		$f_{ADC} = f_{PCLK}/4$	16.5			$1/f_{PCLK}$
		$f_{ADC} = f_{HSI16}$ = 16 MHz	0.252	-	0.260	µs
$Jitter_{ADC}$	ADC jitter on trigger conversion	$f_{ADC} = f_{HSI16}$	-	1	-	$1/f_{HSI16}$
t_S(3)	Sampling time	f_{ADC} = 16 MHz	0.093	-	10.03	µs
		-	1.5	-	160.5	$1/f_{ADC}$
t_{UP_LDO}(3)(5)	Internal LDO power-up time	-	-	-	10	µs
t_{STAB}(3)(5)	ADC stabilization time	-	14			$1/f_{ADC}$
t_{ConV}(3)	Total conversion time (including sampling time)	f_{ADC} = 16 MHz, 12-bit resolution	0.875	-	10.81	µs
		12-bit resolution	14 to 173 (t_S for sampling +12.5 for successive approximation)			$1/f_{ADC}$

1. V_{DDA} minimum value can be decreased in specific temperature conditions. Refer to *Table 64: R_{AIN} max for f_{ADC} = 16 MHz*.
2. A current consumption proportional to the APB clock frequency has to be added (see *Table 39: Peripheral current consumption in Run or Sleep mode*).
3. Guaranteed by design.
4. Standard channels have an extra protection resistance which depends on supply voltage. Refer to *Table 64: R_{AIN} max for f_{ADC} = 16 MHz*.
5. This parameter only includes the ADC timing. It does not take into account register access latency.
6. This parameter specifies the latency to transfer the conversion result into the ADC_DR register. EOC bit is set to indicate the conversion is complete and has the same latency.

Equation 1: R_{AIN} max formula

$$R_{AIN} < \frac{T_S}{f_{ADC} \times C_{ADC} \times \ln(2^{N+2})} - R_{ADC}$$

The simplified formula above (*Equation 1*) is used to determine the maximum external impedance allowed for an error below 1/4 of LSB. Here N = 12 (from 12-bit resolution).

Table 64. R_{AIN} max for f_{ADC} = 16 MHz(1)

T_S (cycles)	t_S (µs)	R_{AIN} max for fast channels (kΩ)	R_{AIN} max for standard channels (kΩ)						
			V_{DD} > 2.7 V	V_{DD} > 2.4 V	V_{DD} > 2.0 V	V_{DD} > 1.8 V	V_{DD} > 1.75 V	V_{DD} > 1.65 V and T_A > –10 °C	V_{DD} > 1.65 V and T_A > 25 °C
1.5	0.09	0.5	< 0.1	NA	NA	NA	NA	NA	NA
3.5	0.22	1	0.2	< 0.1	NA	NA	NA	NA	NA
7.5	0.47	2.5	1.7	1.5	< 0.1	NA	NA	NA	NA
12.5	0.78	4	3.2	3	1	NA	NA	NA	NA
19.5	1.22	6.5	5.7	5.5	3.5	NA	NA	NA	< 0.1
39.5	2.47	13	12.2	12	10	NA	NA	NA	5
79.5	4.97	27	26.2	26	24	< 0.1	NA	NA	19
160.5	10.03	50	49.2	49	47	32	< 0.1	< 0.1	42

1. Guaranteed by design.

Table 65. ADC accuracy(1)(2)(3)

Symbol	Parameter	Conditions	Min	Typ	Max	Unit
ET	Total unadjusted error	1.65 V < V_{DDA} = V_{REF+} < 3.6 V, range 1/2/3	-	2	4	LSB
EO	Offset error		-	1	2.5	
EG	Gain error		-	1	2	
EL	Integral linearity error		-	1.5	2.5	
ED	Differential linearity error		-	1	1.5	
ENOB	Effective number of bits		10.2	11		bits
	Effective number of bits (16-bit mode oversampling with ratio =256)(4)		11.3	12.1	-	
SINAD	Signal-to-noise distortion		63	69	-	dB
SNR	Signal-to-noise ratio		63	69	-	
	Signal-to-noise ratio (16-bit mode oversampling with ratio =256)(4)		70	76	-	
THD	Total harmonic distortion		-	-85	-73	

Table 65. ADC accuracy(1)(2)(3) (continued)

Symbol	Parameter	Conditions	Min	Typ	Max	Unit
ET	Total unadjusted error	1.65 V < V_{REF+} < V_{DDA} < 3.6 V, range 1/2/3	-	2	5	LSB
EO	Offset error		-	1	2.5	
EG	Gain error		-	1	2	
EL	Integral linearity error		-	1.5	3	
ED	Differential linearity error		-	1	2	
ENOB	Effective number of bits		10.0	11.0	-	bits
SINAD	Signal-to-noise distortion		62	69	-	dB
SNR	Signal-to-noise ratio		61	69	-	
THD	Total harmonic distortion		-	-85	-65	

1. ADC DC accuracy values are measured after internal calibration.
2. ADC Accuracy vs. Negative Injection Current: Injecting negative current on any of the standard (non-robust) analog input pins should be avoided as this significantly reduces the accuracy of the conversion being performed on another analog input. It is recommended to add a Schottky diode (pin to ground) to standard analog pins which may potentially inject negative current.
   Any positive injection current within the limits specified for $I_{INJ(PIN)}$ and $\Sigma I_{INJ(PIN)}$ in *Section 6.3.12* does not affect the ADC accuracy.
3. Better performance may be achieved in restricted V_{DDA}, frequency and temperature ranges.
4. This number is obtained by the test board without additional noise, resulting in non-optimized value for oversampling mode.

Figure 28. ADC accuracy characteristics

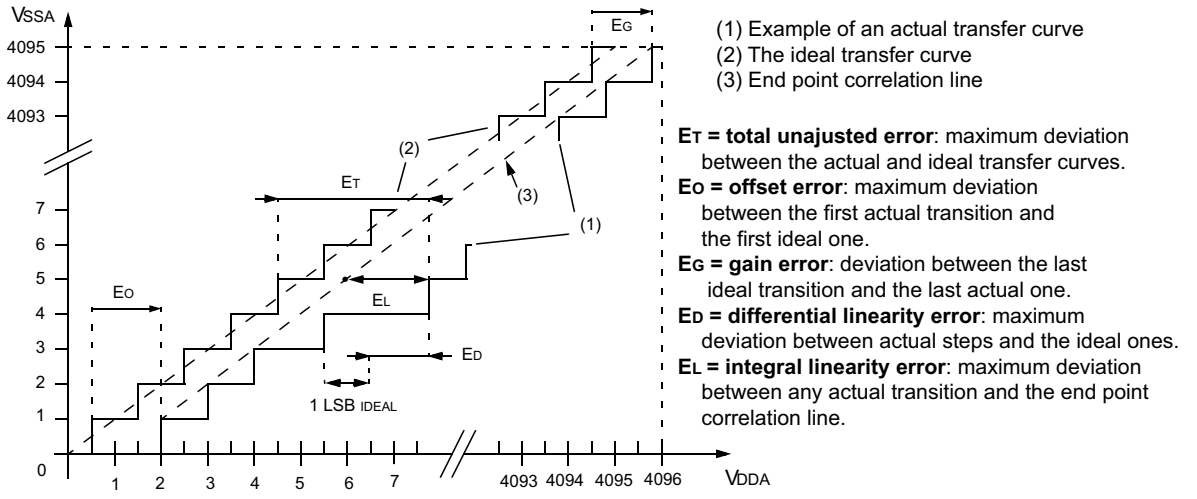

(1) Example of an actual transfer curve
(2) The ideal transfer curve
(3) End point correlation line

E_T = total unajusted error: maximum deviation between the actual and ideal transfer curves.
E_O = offset error: maximum deviation between the first actual transition and the first ideal one.
E_G = gain error: deviation between the last ideal transition and the last actual one.
E_D = differential linearity error: maximum deviation between actual steps and the ideal ones.
E_L = integral linearity error: maximum deviation between any actual transition and the end point correlation line.

MS19880V2

Figure 29. Typical connection diagram using the ADC

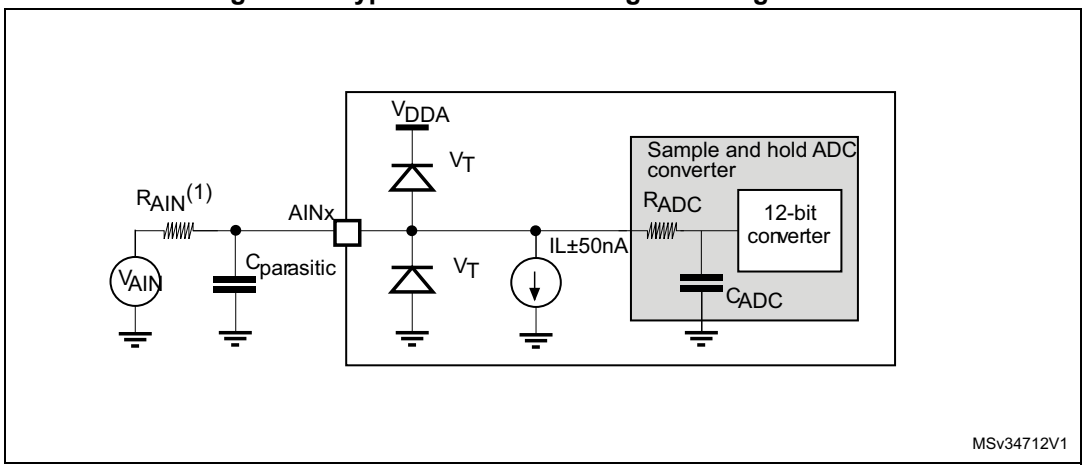

1. Refer to *Table 63: ADC characteristics* for the values of R_{AIN}, R_{ADC} and C_{ADC}.
2. $C_{parasitic}$ represents the capacitance of the PCB (dependent on soldering and PCB layout quality) plus the pad capacitance (roughly 7 pF). A high $C_{parasitic}$ value will downgrade conversion accuracy. To remedy this, f_{ADC} should be reduced.

General PCB design guidelines

Power supply decoupling should be performed as shown in *Figure 30* or *Figure 31*, depending on whether V_{REF+} is connected to V_{DDA} or not. The 10 nF capacitors should be ceramic (good quality). They should be placed as close as possible to the chip.

Figure 30. Power supply and reference decoupling (V_{REF+} not connected to V_{DDA})

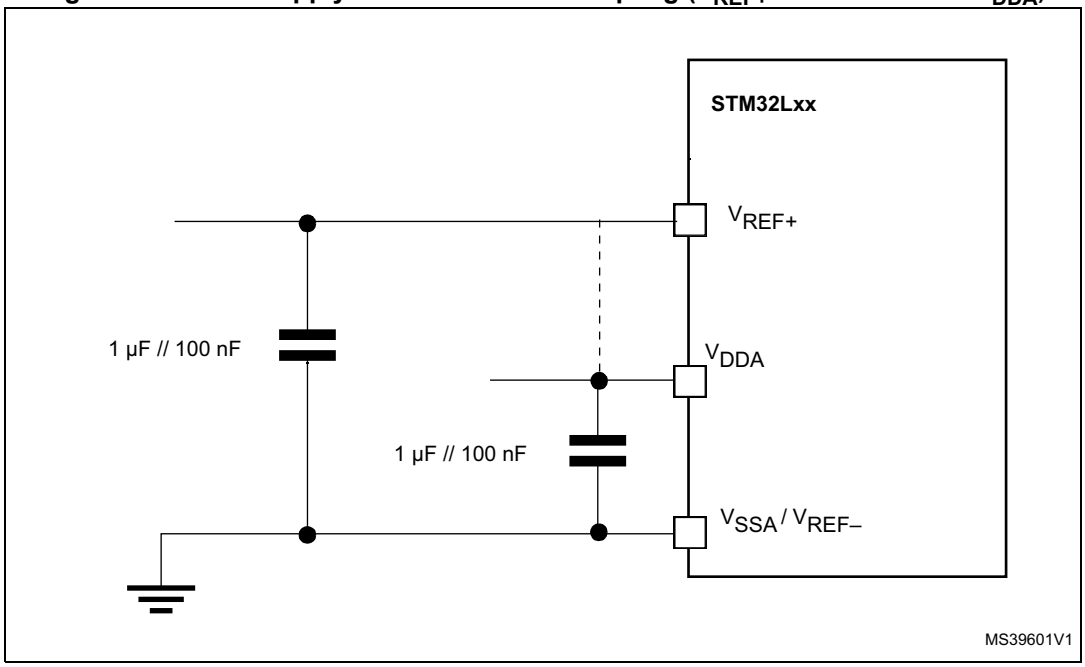

Figure 31. Power supply and reference decoupling (V_{REF+} connected to V_{DDA})

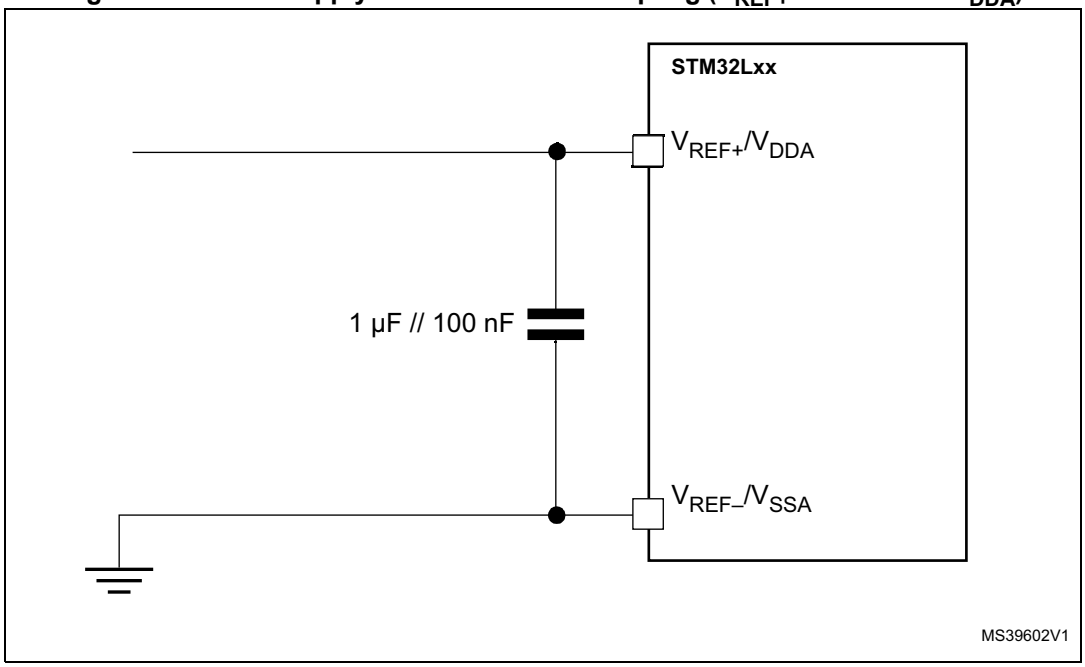

6.3.16 DAC electrical characteristics

Data guaranteed by design, not tested in production, unless otherwise specified.

Table 66. DAC characteristics

Symbol	Parameter	Conditions		Min	Typ	Max	Unit
V_{DDA}	Analog supply voltage	-		1.8	-	3.6	V
V_{REF+}	Reference supply voltage	V_{REF+} must always be below V_{DDA}		1.8	-	3.6	V
V_{REF-}	Lower reference voltage	-		V_{SSA}			V
$I_{DDVREF+}$ (1)	Current consumption on V_{REF+} supply V_{REF+} = 3.3 V	No load, middle code (0x800)		-	130	220	µA
		No load, worst code (0x000)		-	220	350	
I_{DDA} (2)	Current consumption on V_{DDA} supply, V_{DDA} = 3.3 V	No load, middle code (0x800)		-	210	320	µA
		No load, worst code (0xF1C)		-	320	520	
R_L (3)	Resistive load	DAC output ON	R_L connected to V_{SSA}	5	-	-	kΩ
			R_L connected to V_{DDA}	25	-	-	
C_L (3)	Capacitive load	DAC output buffer ON		-	-	50	pF
R_O	Output impedance	DAC output buffer OFF		12	16	20	kΩ
V_{DAC_OUT}	Voltage on DAC_OUT output	DAC output buffer ON		0.2	-	V_{DDA} – 0.2	V
		DAC output buffer OFF		0.5	-	V_{REF+} – 1LSB	mV

Table 66. DAC characteristics (continued)

Symbol	Parameter	Conditions	Min	Typ	Max	Unit
DNL(2)	Differential non linearity(4)	$C_L \leq$ 50 pF, $R_L \geq$ 5 kΩ DAC output buffer ON	-	1.5	3	LSB
		No R_{LOAD}, $C_L \leq$ 50 pF DAC output buffer OFF	-	1.5	3	
INL(2)	Integral non linearity(5)	$C_L \leq$ 50 pF, $R_L \geq$ 5 kΩ DAC output buffer ON	-	2	4	
		No R_{LOAD}, $C_L \leq$ 50 pF DAC output buffer OFF	-	2	4	
Offset(2)	Offset error at code 0x800 (6)	$C_L \leq$ 50 pF, $R_L \geq$ 5 kΩ DAC output buffer ON	-	±10	±25	
		No R_{LOAD}, $C_L \leq$ 50 pF DAC output buffer OFF	-	±5	±8	
Offset1(2)	Offset error at code 0x001(7)	No R_{LOAD}, $C_L \leq$ 50 pF DAC output buffer OFF	-	±1.5	±5	
dOffset/dT(2)	Offset error temperature coefficient (code 0x800)	V_{DDA} = 3.3V V_{REF+}= 3.0 V T_A = 0 to 50 °C DAC output buffer OFF	-20	-10	0	µV/°C
		V_{DDA} = 3.3V V_{REF+}= 3.0 V T_A = 0 to 50 °C DAC output buffer ON	0	20	50	
Gain(2)	Gain error(8)	$C_L \leq$ 50 pF, $R_L \geq$ 5 kΩ DAC output buffer ON	-	+0.1 / -0.2%	+0.2 / -0.5%	%
		No R_{LOAD}, $C_L \leq$ 50 pF DAC output buffer OFF	-	+0 / -0.2%	+0 / -0.4%	
dGain/dT(2)	Gain error temperature coefficient	V_{DDA} = 3.3V V_{REF+}= 3.0 V T_A = 0 to 50 °C DAC output buffer OFF	-10	-2	0	µV/°C
		V_{DDA} = 3.3V V_{REF+}= 3.0 V T_A = 0 to 50 °C DAC output buffer ON	-40	-8	0	
TUE(2)	Total unadjusted error	$C_L \leq$ 50 pF, $R_L \geq$ 5 kΩ DAC output buffer ON	-	12	30	LSB
		No R_{LOAD}, $C_L \leq$ 50 pF DAC output buffer OFF	-	8	12	

Table 66. DAC characteristics (continued)

Symbol	Parameter	Conditions	Min	Typ	Max	Unit
$t_{SETTLING}$	Settling time (full scale: for a 12-bit code transition between the lowest and the highest input codes till DAC_OUT reaches final value ±1LSB	$C_L \leq$ 50 pF, $R_L \geq$ 5 kΩ	-	7	12	µs
Update rate	Max frequency for a correct DAC_OUT change (95% of final value) with 1 LSB variation in the input code	$C_L \leq$ 50 pF, $R_L \geq$ 5 kΩ	-	-	1	Msps
t_{WAKEUP}	Wakeup time from off state (setting the ENx bit in the DAC Control register)(9)	$C_L \leq$ 50 pF, $R_L \geq$ 5 kΩ	-	9	15	µs
PSRR+	V_{DDA} supply rejection ratio (static DC measurement)	$C_L \leq$ 50 pF, $R_L \geq$ 5 kΩ	-	-60	-35	dB

1. Guaranteed by characterization results.
2. Guaranteed by design, not tested in production.
3. Connected between DAC_OUT and V_{SSA}.
4. Difference between two consecutive codes - 1 LSB.
5. Difference between measured value at Code i and the value at Code i on a line drawn between Code 0 and last Code 4095.
6. Difference between the value measured at Code (0x800) and the ideal value = $V_{REF+}/2$.
7. Difference between the value measured at Code (0x001) and the ideal value.
8. Difference between ideal slope of the transfer function and measured slope computed from code 0x000 and 0xFFF when buffer is OFF, and from code giving 0.2 V and (V_{DDA} – 0.2) V when buffer is ON.
9. In buffered mode, the output can overshoot above the final value for low input code (starting from min value).

Figure 32. 12-bit buffered/non-buffered DAC

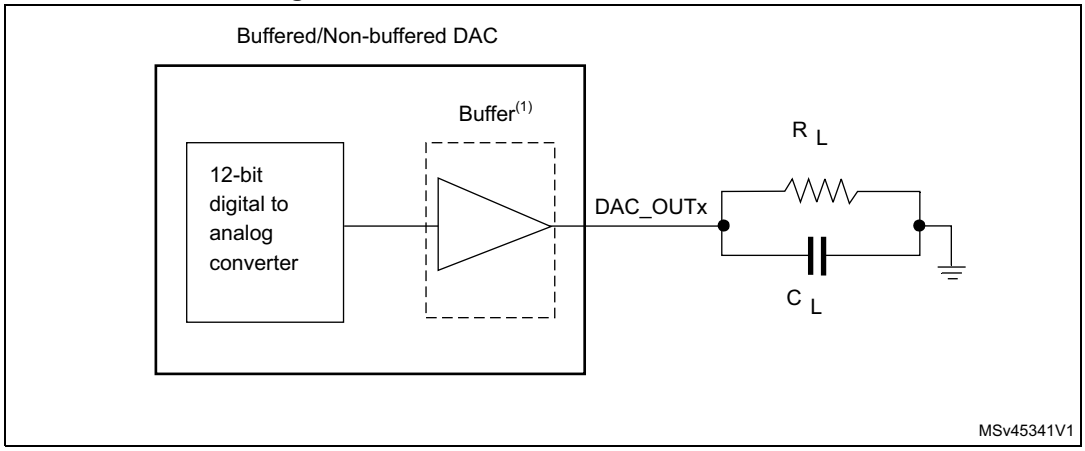

1. The DAC integrates an output buffer that can be used to reduce the output impedance and to drive external loads directly without the use of an external operational amplifier. The buffer can be bypassed by configuring the BOFFx bit in the DAC_CR register.

6.3.17 Temperature sensor characteristics

Table 67. Temperature sensor calibration values

Calibration value name	Description	Memory address
TS_CAL1	TS ADC raw data acquired at temperature of 30 °C, V_{DDA}= 3 V	0x1FF8 007A - 0x1FF8 007B
TS_CAL2	TS ADC raw data acquired at temperature of 130 °C, V_{DDA}= 3 V	0x1FF8 007E - 0x1FF8 007F

Table 68. Temperature sensor characteristics

Symbol	Parameter	Min	Typ	Max	Unit
T_L(1)	V_{SENSE} linearity with temperature	-	±1	±2	°C
Avg_Slope(1)	Average slope	1.48	1.61	1.75	mV/°C
V_{130}	Voltage at 130°C ±5°C(2)	640	670	700	mV
$I_{DDA(TEMP)}$(3)	Current consumption	-	3.4	6	µA
t_{START}(3)	Startup time	-	-	10	µs
T_{S_temp}(4)(3)	ADC sampling time when reading the temperature	10	-	-	

1. Guaranteed by characterization results.
2. Measured at V_{DD} = 3 V ±10 mV. V130 ADC conversion result is stored in the TS_CAL2 byte.
3. Guaranteed by design.
4. Shortest sampling time can be determined in the application by multiple iterations.

6.3.18 Comparators

Table 69. Comparator 1 characteristics

Symbol	Parameter	Conditions	Min(1)	Typ	Max(1)	Unit
V_{DDA}	Analog supply voltage	-	1.65		3.6	V
V_{IN}	Comparator 1 input voltage range	-	0.6	-	V_{DDA}	V
t_{START}	Comparator startup time	-	-	7	10	µs
td	Propagation delay(2)	-	-	3	10	
Voffset	Comparator offset	-	-	±3	±10	mV
$d_{Voffset}/dt$	Comparator offset variation in worst voltage stress conditions	V_{DDA} = 3.6 V, V_{IN+} = 0 V, V_{IN-} = V_{REFINT}, T_A = 25 °C	0	1.5	10	mV/1000 h
I_{COMP1}	Current consumption(3)	-	-	160	260	nA

1. Guaranteed by characterization.
2. The delay is characterized for 100 mV input step with 10 mV overdrive on the inverting input, the non-inverting input set to the reference.
3. Comparator consumption only. Internal reference voltage not included.

Table 70. Comparator 2 characteristics

Symbol	Parameter	Conditions	Min	Typ	Max(1)	Unit
V_{DDA}	Analog supply voltage	-	1.65	-	3.6	V
V_{IN}	Comparator 2 input voltage range	-	0	-	V_{DDA}	V
t_{START}	Comparator startup time	Fast mode	-	15	20	µs
		Slow mode	-	20	25	
$t_{d\ slow}$	Propagation delay(2) in slow mode	1.65 V ≤ V_{DDA} ≤ 2.7 V	-	1.8	3.5	
		2.7 V ≤ V_{DDA} ≤ 3.6 V	-	2.5	6	
$t_{d\ fast}$	Propagation delay(2) in fast mode	1.65 V ≤ V_{DDA} ≤ 2.7 V	-	0.8	2	
		2.7 V ≤ V_{DDA} ≤ 3.6 V	-	1.2	4	
V_{offset}	Comparator offset error		-	±4	±20	mV
dThreshold/ dt	Threshold voltage temperature coefficient	V_{DDA} = 3.3V, T_A = 0 to 50 °C, V- = V_{REFINT}, 3/4 V_{REFINT}, 1/2 V_{REFINT}, 1/4 V_{REFINT}.	-	15	30	ppm /°C
I_{COMP2}	Current consumption(3)	Fast mode	-	3.5	5	µA
		Slow mode	-	0.5	2	

1. Guaranteed by characterization results.
2. The delay is characterized for 100 mV input step with 10 mV overdrive on the inverting input, the non-inverting input set to the reference.
3. Comparator consumption only. Internal reference voltage (required for comparator operation) is not included.

6.3.19 Timer characteristics

TIM timer characteristics

The parameters given in the *Table 71* are guaranteed by design.

Refer to *Section 6.3.13: I/O port characteristics* for details on the input/output alternate function characteristics (output compare, input capture, external clock, PWM output).

Table 71. TIMx characteristics(1)

Symbol	Parameter	Conditions	Min	Max	Unit
$t_{res(TIM)}$	Timer resolution time		1	-	$t_{TIMxCLK}$
		$f_{TIMxCLK}$ = 32 MHz	31.25	-	ns
f_{EXT}	Timer external clock frequency on CH1 to CH4		0	$f_{TIMxCLK}/2$	MHz
		$f_{TIMxCLK}$ = 32 MHz	0	16	MHz
Res_{TIM}	Timer resolution	-		16	bit
$t_{COUNTER}$	16-bit counter clock period when internal clock is selected (timer's prescaler disabled)	-	1	65536	$t_{TIMxCLK}$
		$f_{TIMxCLK}$ = 32 MHz	0.0312	2048	µs
t_{MAX_COUNT}	Maximum possible count	-	-	65536 × 65536	$t_{TIMxCLK}$
		$f_{TIMxCLK}$ = 32 MHz	-	134.2	s

1. TIMx is used as a general term to refer to the TIM2, TIM6, TIM21, and TIM22 timers.

6.3.20 Communications interfaces

I^2C interface characteristics

The I^2C interface meets the timings requirements of the I^2C-bus specification and user manual rev. 03 for:

- Standard-mode (Sm) : with a bit rate up to 100 kbit/s
- Fast-mode (Fm) : with a bit rate up to 400 kbit/s
- Fast-mode Plus (Fm+) : with a bit rate up to 1 Mbit/s.

The I^2C timing requirements are guaranteed by design when the I^2C peripheral is properly configured (refer to the reference manual for details). The SDA and SCL I/O requirements are met with the following restrictions: the SDA and SCL I/O pins are not "true" open-drain. When configured as open-drain, the PMOS connected between the I/O pin and VDDIOx is disabled, but is still present. Only FTf I/O pins support Fm+ low level output current maximum requirement (refer to *Section 6.3.13: I/O port characteristics* for the I2C I/Os characteristics).

All I^2C SDA and SCL I/Os embed an analog filter (see *Table 72* for the analog filter characteristics).

The analog spike filter is compliant with I^2C timings requirements only for the following voltage ranges:

- Fast mode Plus: 2.7 V ≤ V_{DD} ≤ 3.6 V and voltage scaling Range 1
- Fast mode:
  - 2 V ≤ V_{DD} ≤ 3.6 V and voltage scaling Range 1 or Range 2.
  - V_{DD} < 2 V, voltage scaling Range 1 or Range 2, C_{load} < 200 pF.

In other ranges, the analog filter should be disabled. The digital filter can be used instead.

Note: In Standard mode, no spike filter is required.

Table 72. I2C analog filter characteristics(1)

Symbol	Parameter	Conditions	Min	Max	Unit
t_{AF}	Maximum pulse width of spikes that are suppressed by the analog filter	Range 1	50(2)	100(3)	ns
		Range 2		-	
		Range 3		-	

1. Guaranteed by characterization results.
2. Spikes with widths below $t_{AF(min)}$ are filtered.
3. Spikes with widths above $t_{AF(max)}$ are not filtered

SPI characteristics

Unless otherwise specified, the parameters given in the following tables are derived from tests performed under ambient temperature, f_{PCLKx} frequency and V_{DD} supply voltage conditions summarized in *Table 25*.

Refer to *Section 6.3.12: I/O current injection characteristics* for more details on the input/output alternate function characteristics (NSS, SCK, MOSI, MISO).

Table 73. SPI characteristics in voltage Range 1 (1)

Symbol	Parameter	Conditions	Min	Typ	Max	Unit
f_{SCK} $1/t_{c(SCK)}$	SPI clock frequency	Master mode	-	-	16	MHz
		Slave mode receiver			16	
		Slave mode Transmitter 1.71<V_{DD}<3.6V	-	-	12(2)	
		Slave mode Transmitter 2.7<V_{DD}<3.6V	-	-	16(2)	
$Duty_{(SCK)}$	Duty cycle of SPI clock frequency	Slave mode	30	50	70	%

Table 73. SPI characteristics in voltage Range 1 (1) (continued)

Symbol	Parameter	Conditions	Min	Typ	Max	Unit
$t_{su(NSS)}$	NSS setup time	Slave mode, SPI presc = 2	4*Tpclk	-	-	ns
$t_{h(NSS)}$	NSS hold time	Slave mode, SPI presc = 2	2*Tpclk	-	-	
$t_{w(SCKH)}$ $t_{w(SCKL)}$	SCK high and low time	Master mode	Tpclk-2	Tpclk	Tpclk+ 2	
$t_{su(MI)}$	Data input setup time	Master mode	0	-	-	
$t_{su(SI)}$		Slave mode	3	-	-	
$t_{h(MI)}$	Data input hold time	Master mode	7	-	-	
$t_{h(SI)}$		Slave mode	3.5	-	-	
$t_{a(SO}$	Data output access time	Slave mode	15	-	36	
$t_{dis(SO)}$	Data output disable time	Slave mode	10	-	30	
$t_{v(SO)}$	Data output valid time	Slave mode 1.65 V<V_{DD}<3.6 V	-	18	41	
		Slave mode 2.7 V<V_{DD}<3.6 V	-	18	25	
$t_{v(MO)}$		Master mode	-	4	7	
$t_{h(SO)}$	Data output hold time	Slave mode	10	-	-	
$t_{h(MO)}$		Master mode	0	-	-	

1. Guaranteed by characterization results.
2. The maximum SPI clock frequency in slave transmitter mode is determined by the sum of $t_{v(SO)}$ and $t_{su(MI)}$ which has to fit into SCK low or high phase preceding the SCK sampling edge. This value can be achieved when the SPI communicates with a master having $t_{su(MI)}$ = 0 while $Duty_{(SCK)}$ = 50%.

Table 74. SPI characteristics in voltage Range 2 (1)

Symbol	Parameter	Conditions	Min	Typ	Max	Unit
f_{SCK} $1/t_{c(SCK)}$	SPI clock frequency	Master mode	-	-	8	MHz
		Slave mode Transmitter $1.65<V_{DD}<3.6V$			8	
		Slave mode Transmitter $2.7<V_{DD}<3.6V$			8(2)	
$Duty_{(SCK)}$	Duty cycle of SPI clock frequency	Slave mode	30	50	70	%
$t_{su(NSS)}$	NSS setup time	Slave mode, SPI presc = 2	4*Tpclk	-	-	ns
$t_{h(NSS)}$	NSS hold time	Slave mode, SPI presc = 2	2*Tpclk	-	-	
$t_{w(SCKH)}$ $t_{w(SCKL)}$	SCK high and low time	Master mode	Tpclk-2	Tpclk	Tpclk+2	
$t_{su(MI)}$	Data input setup time	Master mode	0	-	-	
$t_{su(SI)}$		Slave mode	3	-	-	
$t_{h(MI)}$	Data input hold time	Master mode	11	-	-	
$t_{h(SI)}$		Slave mode	4.5	-	-	
$t_{a(SO}$	Data output access time	Slave mode	18	-	52	
$t_{dis(SO)}$	Data output disable time	Slave mode	12	-	42	
$t_{v(SO)}$	Data output valid time	Slave mode	-	20	56.5	
$t_{v(MO)}$		Master mode	-	5	9	
$t_{h(SO)}$	Data output hold time	Slave mode	13	-	-	
$t_{h(MO)}$		Master mode	3	-	-	

1. Guaranteed by characterization results.
2. The maximum SPI clock frequency in slave transmitter mode is determined by the sum of $t_{v(SO)}$ and $t_{su(MI)}$ which has to fit into SCK low or high phase preceding the SCK sampling edge. This value can be achieved when the SPI communicates with a master having $t_{su(MI)}$ = 0 while $Duty_{(SCK)}$ = 50%.

Table 75. SPI characteristics in voltage Range 3 (1)

Symbol	Parameter	Conditions	Min	Typ	Max	Unit
f_{SCK} $1/t_{c(SCK)}$	SPI clock frequency	Master mode	-	-	2	MHz
		Slave mode			2(2)	
$Duty_{(SCK)}$	Duty cycle of SPI clock frequency	Slave mode	30	50	70	%
$t_{su(NSS)}$	NSS setup time	Slave mode, SPI presc = 2	4*Tpclk	-	-	ns
$t_{h(NSS)}$	NSS hold time	Slave mode, SPI presc = 2	2*Tpclk	-	-	
$t_{w(SCKH)}$ $t_{w(SCKL)}$	SCK high and low time	Master mode	Tpclk-2	Tpclk	Tpclk+2	
$t_{su(MI)}$	Data input setup time	Master mode	1.5	-	-	
$t_{su(SI)}$		Slave mode	6	-	-	
$t_{h(MI)}$	Data input hold time	Master mode	13.5	-	-	
$t_{h(SI)}$		Slave mode	16	-	-	
$t_{a(SO}$	Data output access time	Slave mode	30	-	70	
$t_{dis(SO)}$	Data output disable time	Slave mode	40	-	80	
$t_{v(SO)}$	Data output valid time	Slave mode	-	30	70	
$t_{v(MO)}$		Master mode	-	7	9	
$t_{h(SO)}$	Data output hold time	Slave mode	25	-	-	
$t_{h(MO)}$		Master mode	8	-	-	

1. Guaranteed by characterization results.
2. The maximum SPI clock frequency in slave transmitter mode is determined by the sum of $t_{v(SO)}$ and $t_{su(MI)}$ which has to fit into SCK low or high phase preceding the SCK sampling edge. This value can be achieved when the SPI communicates with a master having $t_{su(MI)}$ = 0 while $Duty_{(SCK)}$ = 50%.

Figure 33. SPI timing diagram - slave mode and CPHA = 0

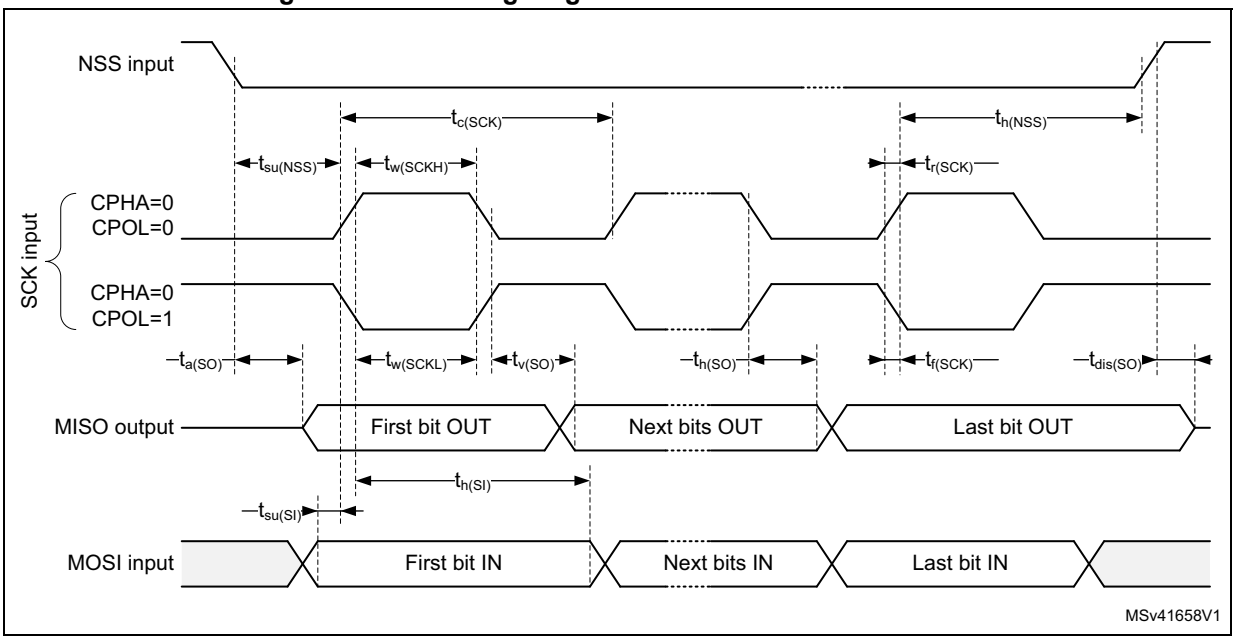

Figure 34. SPI timing diagram - slave mode and CPHA = 1(1)

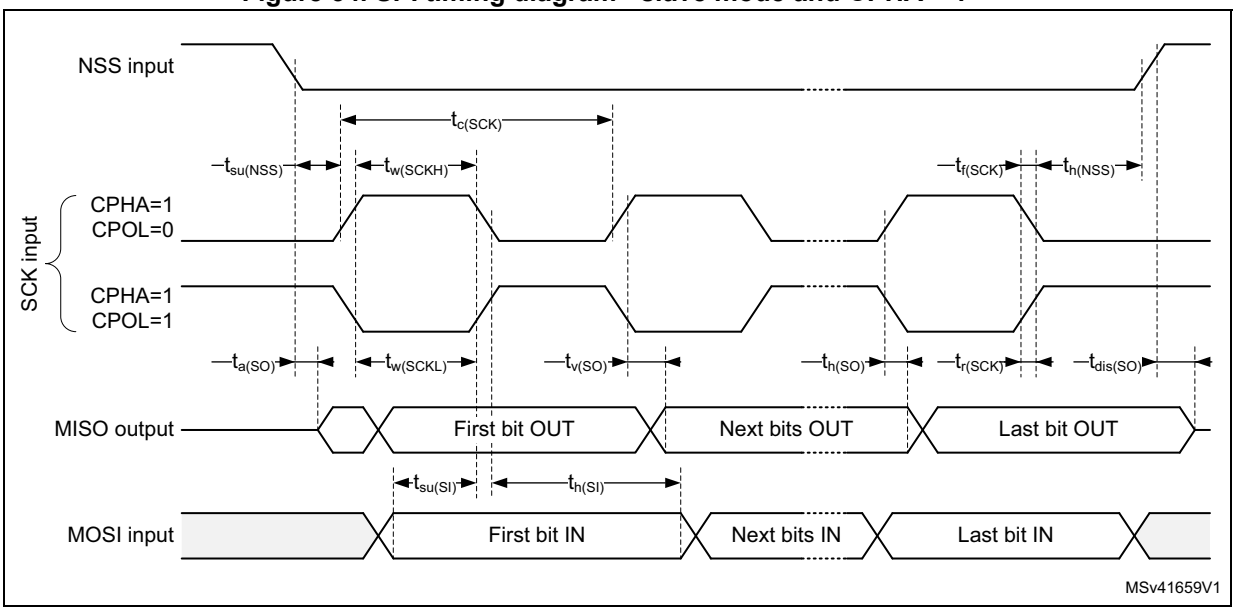

1. Measurement points are done at CMOS levels: $0.3V_{DD}$ and $0.7V_{DD}$.

Figure 35. SPI timing diagram - master mode(1)

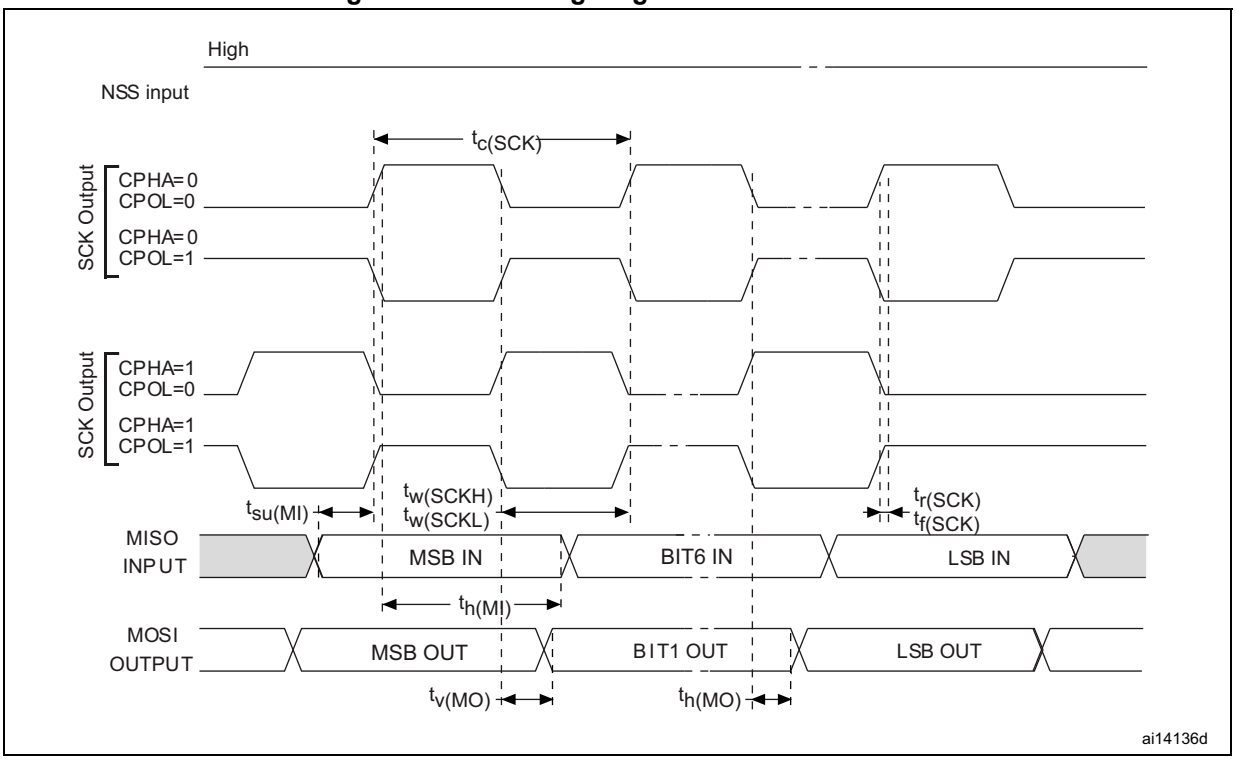

1. Measurement points are done at CMOS levels: $0.3V_{DD}$ and $0.7V_{DD}$.

I2S characteristics

Table 76. I2S characteristics(1)

Symbol	Parameter	Conditions	Min	Max	Unit
f_{MCK}	I2S Main clock output	-	256 x 8K	256xFs (2)	MHz
f_{CK}	I2S clock frequency	Master data: 32 bits	-	64xFs	MHz
		Slave data: 32 bits	-	64xFs	
D_{CK}	I2S clock frequency duty cycle	Slave receiver	30	70	%
$t_{v(WS)}$	WS valid time	Master mode	-	15	ns
$t_{h(WS)}$	WS hold time	Master mode	11	-	
$t_{su(WS)}$	WS setup time	Slave mode	6	-	
$t_{h(WS)}$	WS hold time	Slave mode	2	-	
$t_{su(SD_MR)}$	Data input setup time	Master receiver	0	-	
$t_{su(SD_SR)}$		Slave receiver	6.5	-	
$t_{h(SD_MR)}$	Data input hold time	Master receiver	18	-	
$t_{h(SD_SR)}$		Slave receiver	15.5	-	
$t_{v(SD_ST)}$	Data output valid time	Slave transmitter (after enable edge)	-	77	
$t_{v(SD_MT)}$		Master transmitter (after enable edge)	-	8	
$t_{h(SD_ST)}$	Data output hold time	Slave transmitter (after enable edge)	18	-	
$t_{h(SD_MT)}$		Master transmitter (after enable edge)	1.5	-	

1. Guaranteed by characterization results.
2. 256xFs maximum value is equal to the maximum clock frequency.

*Note: Refer to the I2S section of the product reference manual for more details about the sampling frequency (Fs), f_{MCK}, f_{CK} and D_{CK} values. These values reflect only the digital peripheral behavior, source clock precision might slightly change them. DCK depends mainly on the ODD bit value, digital contribution leads to a min of (I2SDIV/(2*I2SDIV+ODD) and a max of (I2SDIV+ODD)/(2*I2SDIV+ODD). Fs max is supported for each mode/condition.*

Figure 36. I²S slave timing diagram (Philips protocol)(1)

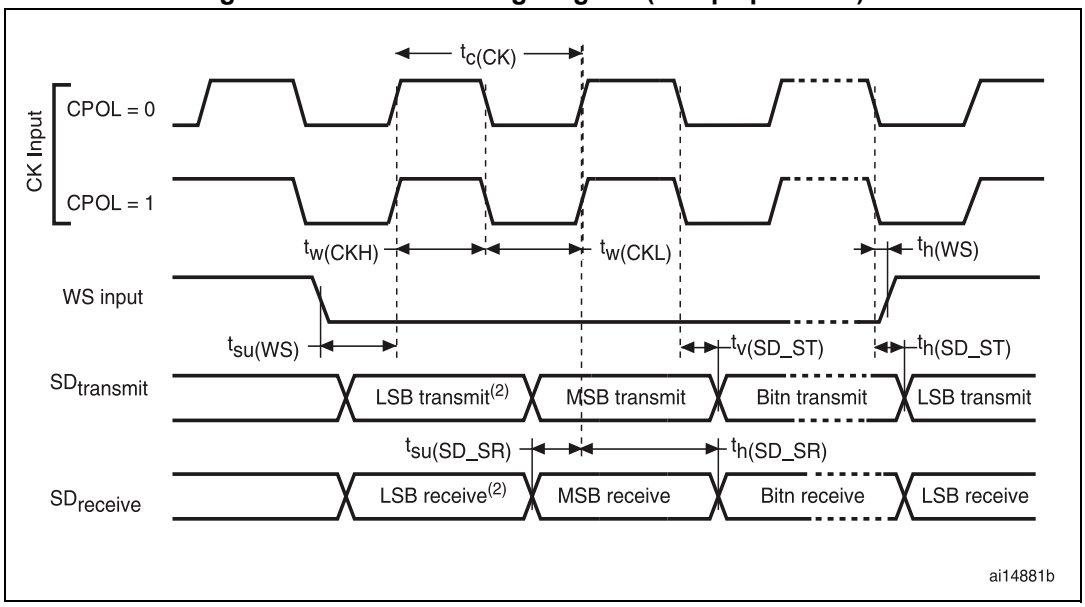

1. Measurement points are done at CMOS levels: $0.3 \times V_{DD}$ and $0.7 \times V_{DD}$.
2. LSB transmit/receive of the previously transmitted byte. No LSB transmit/receive is sent before the first byte.

Figure 37. I²S master timing diagram (Philips protocol)(1)

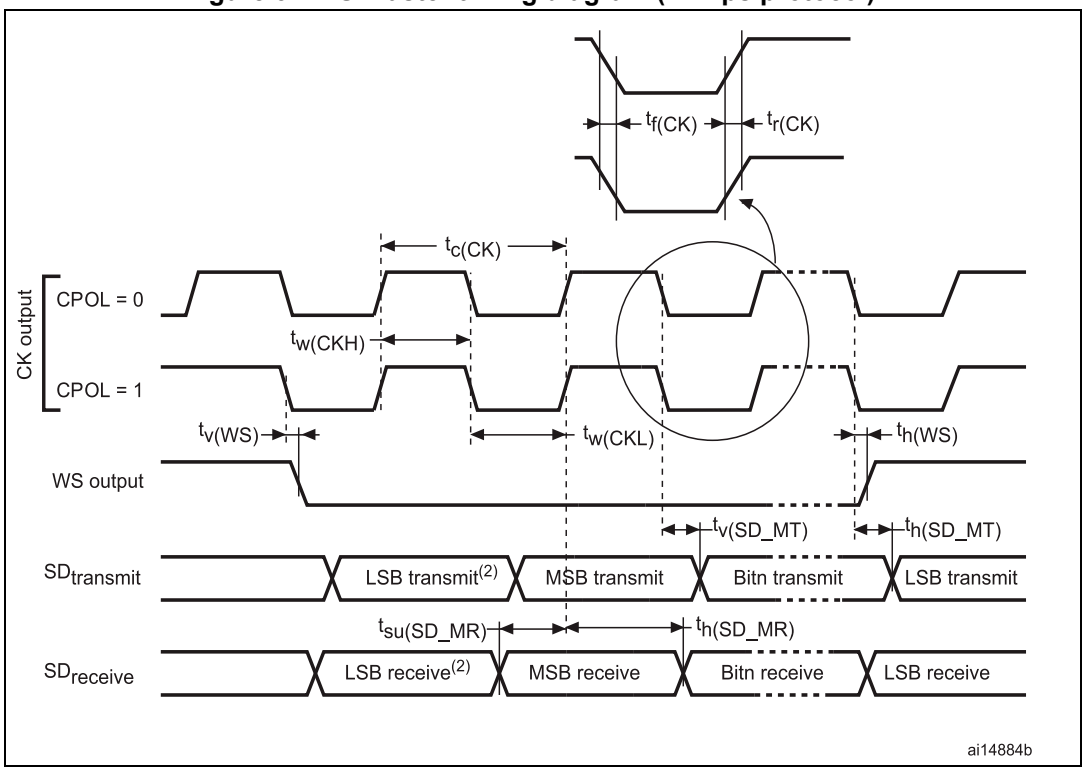

1. Guaranteed by characterization results.
2. LSB transmit/receive of the previously transmitted byte. No LSB transmit/receive is sent before the first byte.

USB characteristics

The USB interface is USB-IF certified (full speed).

Table 77. USB startup time

Symbol	Parameter	Max	Unit
$t_{STARTUP}$(1)	USB transceiver startup time	1	µs

1. Guaranteed by design.

Table 78. USB DC electrical characteristics

Symbol	Parameter	Conditions	Min.(1)	Max.(1)	Unit
Input levels					
V_{DD}	USB operating voltage	-	3.0	3.6	V
V_{DI}(2)	Differential input sensitivity	I(USB_DP, USB_DM)	0.2	-	V
V_{CM}(2)	Differential common mode range	Includes V_{DI} range	0.8	2.5	
V_{SE}(2)	Single ended receiver threshold	-	1.3	2.0	
Output levels					
V_{OL}(3)	Static output level low	R_L of 1.5 kΩ to 3.6 V(4)	-	0.3	V
V_{OH}(3)	Static output level high	R_L of 15 kΩ to V_{SS}(4)	2.8	3.6	

1. All the voltages are measured from the local ground potential.
2. Guaranteed by characterization results.
3. Guaranteed by test in production.
4. R_L is the load connected on the USB drivers.

Figure 38. USB timings: definition of data signal rise and fall time

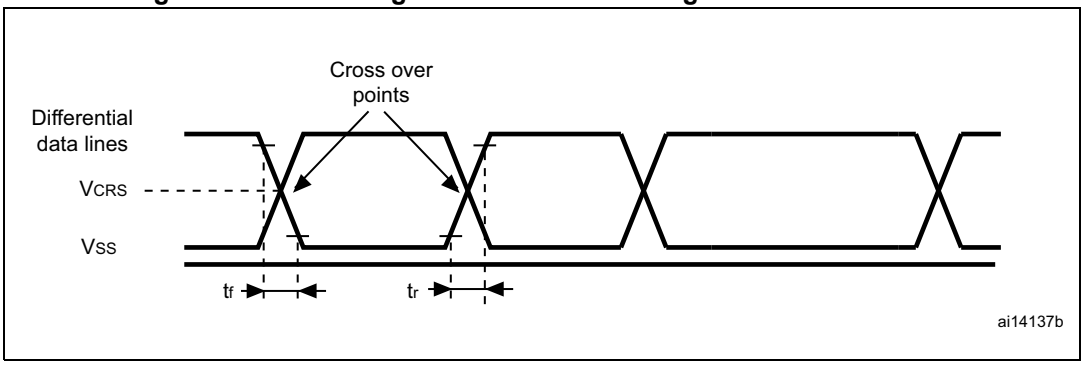

Table 79. USB: full speed electrical characteristics

Driver characteristics[1]					
Symbol	**Parameter**	**Conditions**	**Min**	**Max**	**Unit**
t_r	Rise time[2]	C_L = 50 pF	4	20	ns
t_f	Fall Time[2]	C_L = 50 pF	4	20	ns
t_{rfm}	Rise/ fall time matching	t_r/t_f	90	110	%
V_{CRS}	Output signal crossover voltage		1.3	2.0	V

1. Guaranteed by design.
2. Measured from 10% to 90% of the data signal. For more detailed informations, please refer to USB Specification - Chapter 7 (version 2.0).

7 Package information

In order to meet environmental requirements, ST offers these devices in different grades of ECOPACK packages, depending on their level of environmental compliance. ECOPACK specifications, grade definitions and product status *are available at www.st.com.* ECOPACK is an ST trademark.

7.1 LQFP64 package information

Figure 39. LQFP64 - 64-pin, 10 x 10 mm low-profile quad flat package outline

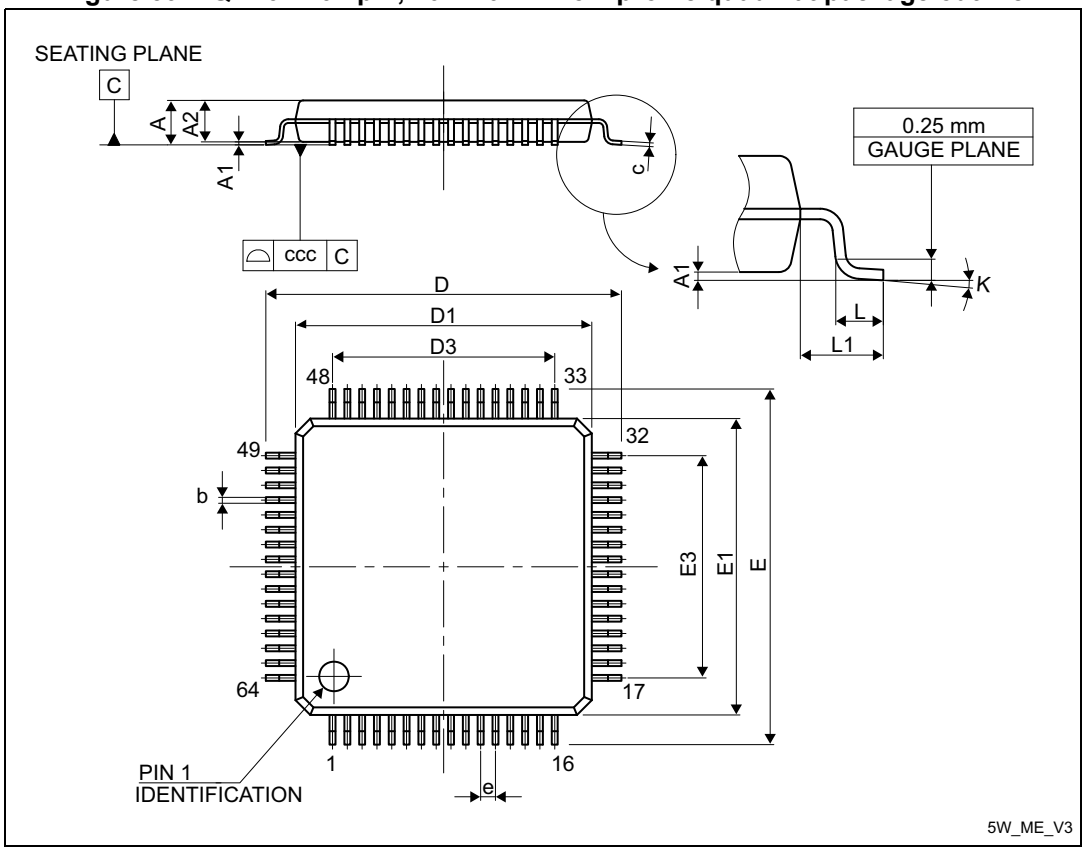

1. Drawing is not to scale.

Table 80. LQFP64 - 64-pin, 10 x 10 mm low-profile quad flat package mechanical data

Symbol	millimeters			inches[1]		
	Min	Typ	Max	Min	Typ	Max
A	-	-	1.600	-	-	0.0630
A1	0.050	-	0.150	0.0020	-	0.0059
A2	1.350	1.400	1.450	0.0531	0.0551	0.0571
b	0.170	0.220	0.270	0.0067	0.0087	0.0106
c	0.090	-	0.200	0.0035	-	0.0079
D	-	12.000	-	-	0.4724	-
D1	-	10.000	-	-	0.3937	-
D3	-	7.500	-	-	0.2953	-
E	-	12.000	-	-	0.4724	-
E1	-	10.000	-	-	0.3937	-
E3	-	7.500	-	-	0.2953	-
e	-	0.500	-	-	0.0197	-
K	0°	3.5°	7°	0°	3.5°	7°
L	0.450	0.600	0.750	0.0177	0.0236	0.0295
L1	-	1.000	-	-	0.0394	-
ccc	-	-	0.080	-	-	0.0031

1. Values in inches are converted from mm and rounded to 4 decimal digits.

Figure 40. LQFP64 - 64-pin, 10 x 10 mm low-profile quad flat recommended footprint

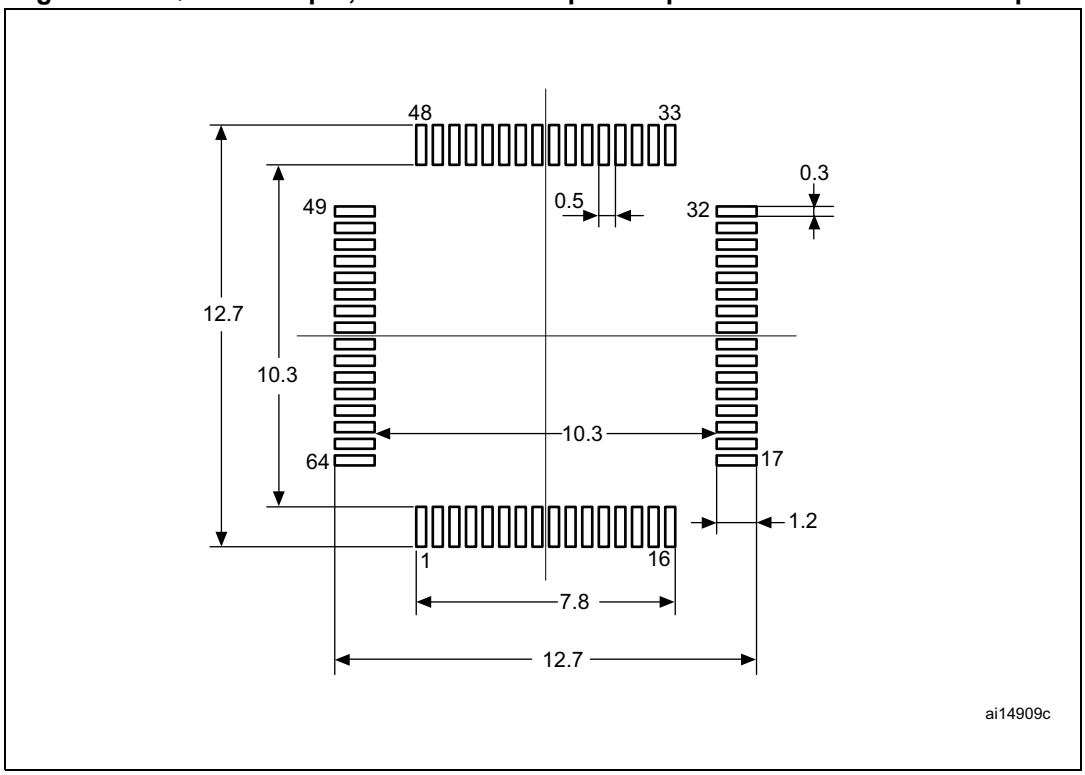

1. Dimensions are expressed in millimeters.

Device marking for LQFP64

The following figure gives an example of topside marking versus pin 1 position identifier location.

The printed markings may differ depending on the supply chain.

Other optional marking or inset/upset marks, which depend on supply chain operations, are not indicated below.

Figure 41. LQFP64 marking example (package top view)

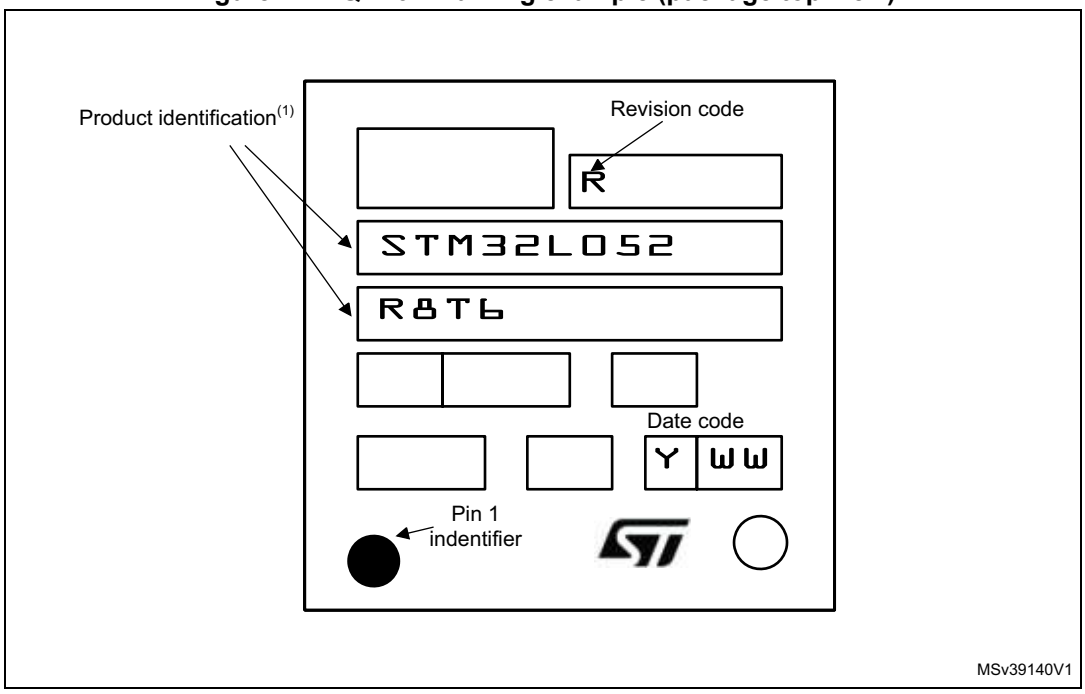

1. Parts marked as “ES”, “E” or accompanied by an Engineering Sample notification letter, are not yet qualified and therefore not approved for use in production. ST is not responsible for any consequences resulting from such use. In no event will ST be liable for the customer using any of these engineering samples in production. ST’s Quality department must be contacted prior to any decision to use these engineering samples to run a qualification activity.

7.2 TFBGA64 package information

Figure 42. TFBGA64 – 64-ball, 5 x 5 mm, 0.5 mm pitch thin profile fine pitch ball grid array package outline

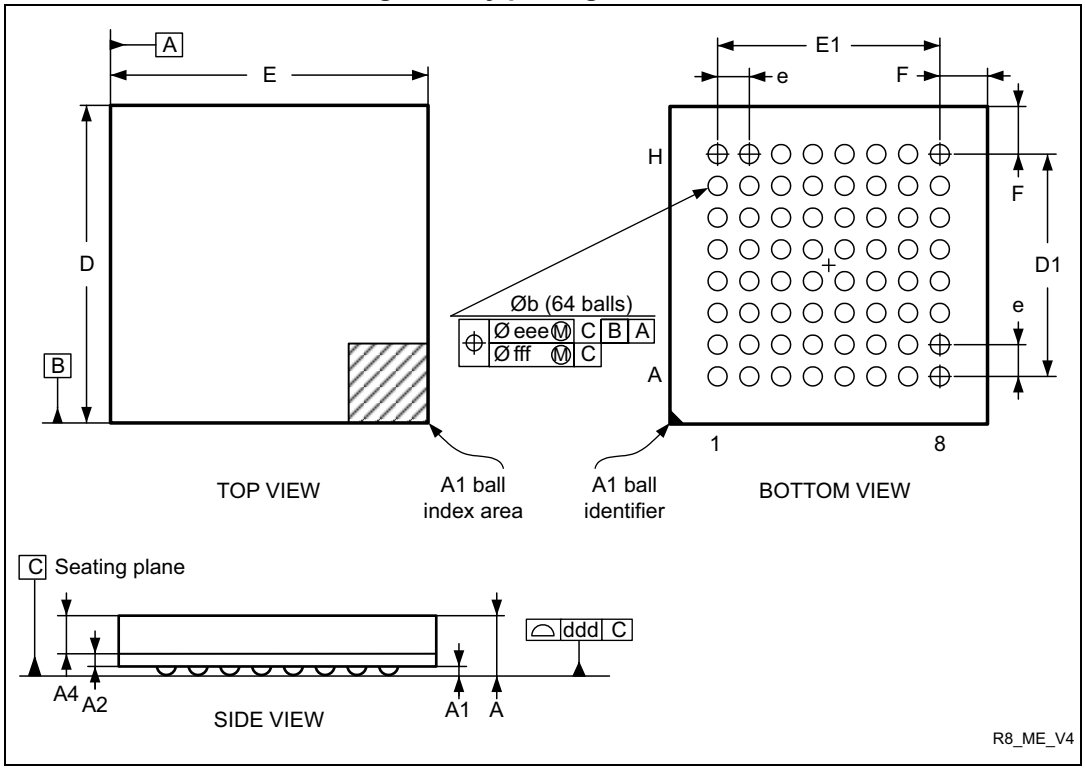

1. Drawing is not to scale.

Table 81. TFBGA64 – 64-ball, 5 x 5 mm, 0.5 mm pitch thin profile fine pitch ball grid array package outline

Symbol	millimeters			inches[1]		
	Min	Typ	Max	Min	Typ	Max
A	-	-	1.200	-	-	0.0472
A1	0.150	-	-	0.0059	-	-
A2	-	0.200	-	-	0.0079	-
A4	-	-	0.600	-	-	0.0236
b	0.250	0.300	0.350	0.0098	0.0118	0.0138
D	4.850	5.000	5.150	0.1909	0.1969	0.2028
D1	-	3.500	-	-	0.1378	-
E	4.850	5.000	5.150	0.1909	0.1969	0.2028
E1	-	3.500	-	-	0.1378	-
e	-	0.500	-	-	0.0197	-
F	-	0.750	-	-	0.0295	-

Table 81. TFBGA64 – 64-ball, 5 x 5 mm, 0.5 mm pitch thin profile fine pitch ball grid array package outline (continued)

Symbol	millimeters			inches[1]		
	Min	Typ	Max	Min	Typ	Max
ddd	-	-	0.080	-	-	0.0031
eee	-	-	0.150	-	-	0.0059
fff	-	-	0.050	-	-	0.0020

1. Values in inches are converted from mm and rounded to 4 decimal digits.

Figure 43. TFBGA64 – 64-ball, 5 x 5 mm, 0.5 mm pitch, thin profile fine pitch ball ,grid array recommended footprint

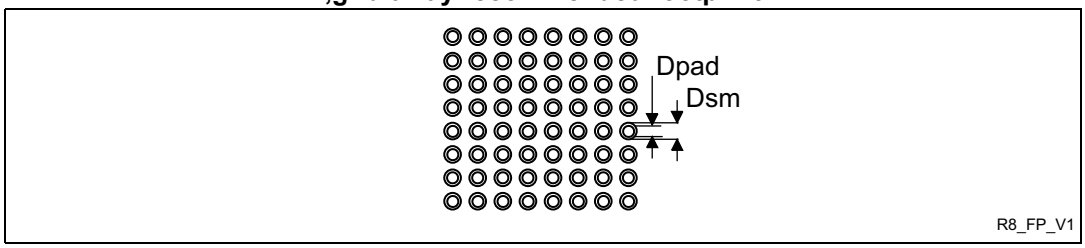

Table 82. TFBGA64 recommended PCB design rules (0.5 mm pitch BGA)

Dimension	Recommended values
Pitch	0.5
Dpad	0.280 mm
Dsm	0.370 mm typ. (depends on the soldermask registration tolerance)
Stencil opening	0.280 mm
Stencil thickness	Between 0.100 mm and 1.125 mm
Pad trace width	0.100 mm

Device marking for TFBGA64

The following figure gives an example of topside marking versus ball A 1 position identifier location.

The printed markings may differ depending on the supply chain.

Other optional marking or inset/upset marks, which depend on supply chain operations, are not indicated below.

Figure 44. TFBGA64 marking example (package top view)

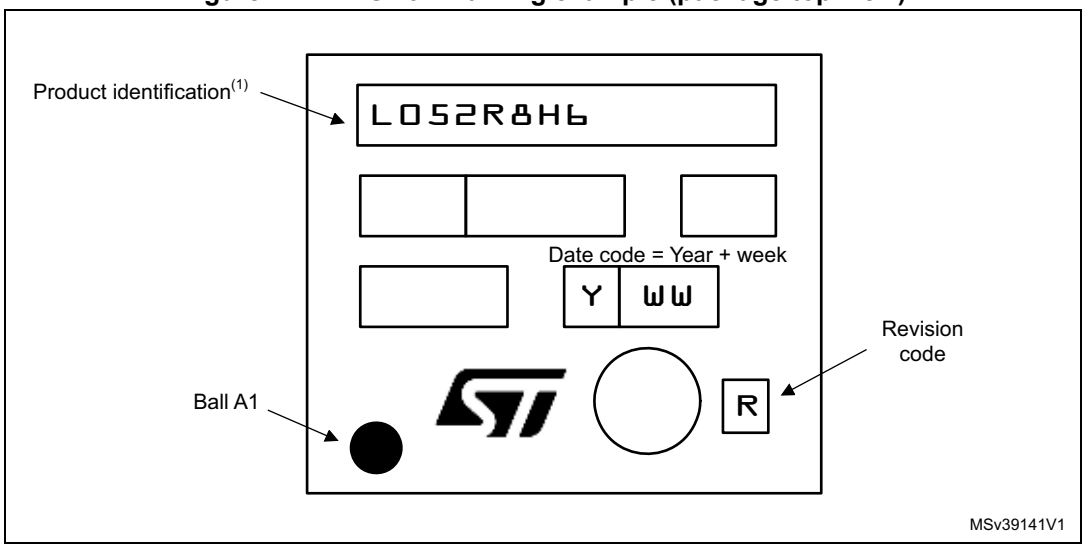

1. Parts marked as “ES”, “E” or accompanied by an Engineering Sample notification letter, are not yet qualified and therefore not approved for use in production. ST is not responsible for any consequences resulting from such use. In no event will ST be liable for the customer using any of these engineering samples in production. ST’s Quality department must be contacted prior to any decision to use these engineering samples to run a qualification activity.

7.3 LQFP48 package information

Figure 45. LQFP48 - 48-pin, 7 x 7 mm low-profile quad flat package outline

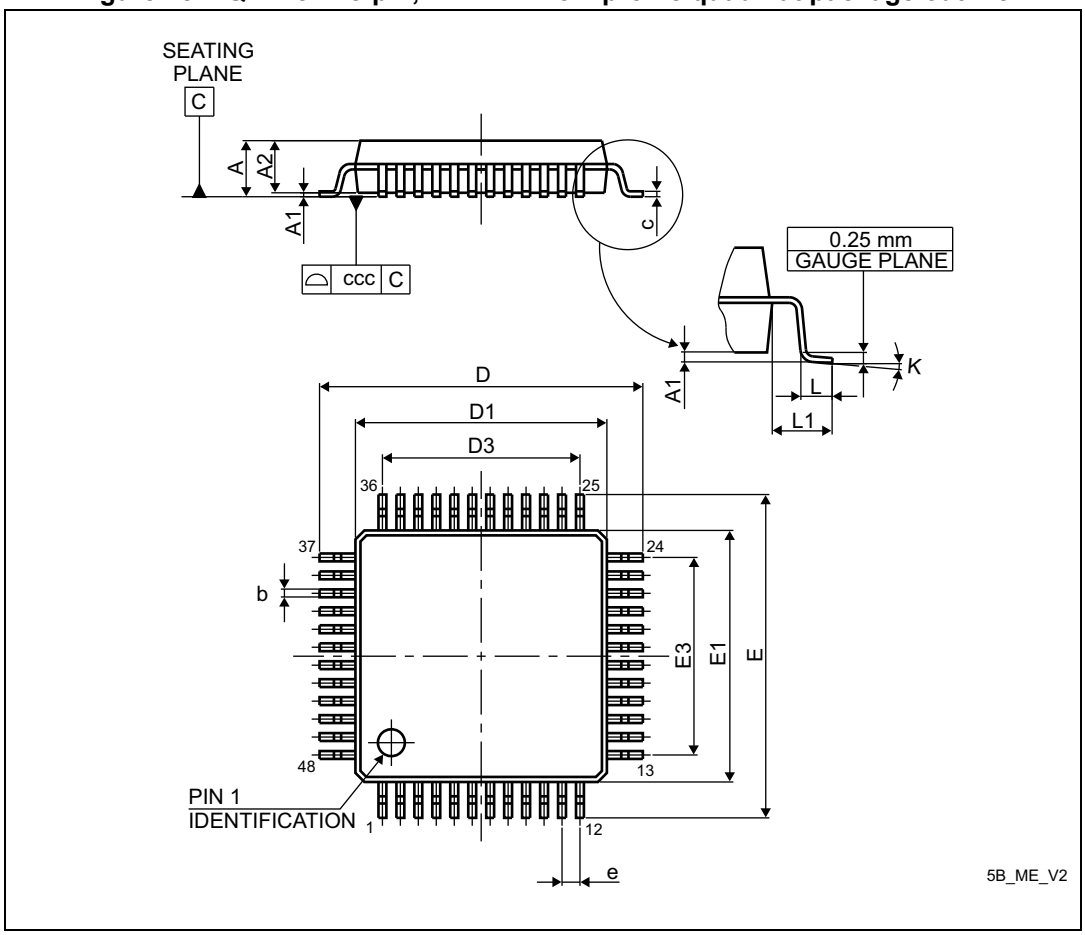

1. Drawing is not to scale.

Table 83. LQFP48 - 48-pin, 7 x 7 mm low-profile quad flat package mechanical data

Symbol	millimeters			inches[1]		
	Min	Typ	Max	Min	Typ	Max
A	-	-	1.600	-	-	0.0630
A1	0.050	-	0.150	0.0020	-	0.0059
A2	1.350	1.400	1.450	0.0531	0.0551	0.0571
b	0.170	0.220	0.270	0.0067	0.0087	0.0106
c	0.090	-	0.200	0.0035	-	0.0079
D	8.800	9.000	9.200	0.3465	0.3543	0.3622
D1	6.800	7.000	7.200	0.2677	0.2756	0.2835
D3	-	5.500	-	-	0.2165	-
E	8.800	9.000	9.200	0.3465	0.3543	0.3622
E1	6.800	7.000	7.200	0.2677	0.2756	0.2835
E3	-	5.500	-	-	0.2165	-
e	-	0.500	-	-	0.0197	-
L	0.450	0.600	0.750	0.0177	0.0236	0.0295
L1	-	1.000	-	-	0.0394	-
k	0°	3.5°	7°	0°	3.5°	7°
ccc	-	-	0.080	-	-	0.0031

1. Values in inches are converted from mm and rounded to 4 decimal digits.

Figure 46. LQFP48 - 48-pin, 7 x 7 mm low-profile quad flat recommended footprint

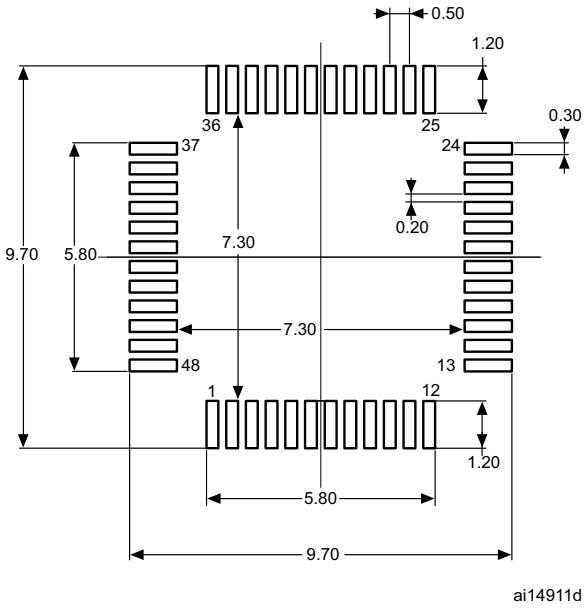

1. Dimensions are expressed in millimeters.

Device marking for LQFP48

The following figure gives an example of topside marking versus pin 1 position identifier location.

The printed markings may differ depending on the supply chain.

Other optional marking or inset/upset marks, which depend on supply chain operations, are not indicated below.

Figure 47. LQFP48 marking example (package top view)

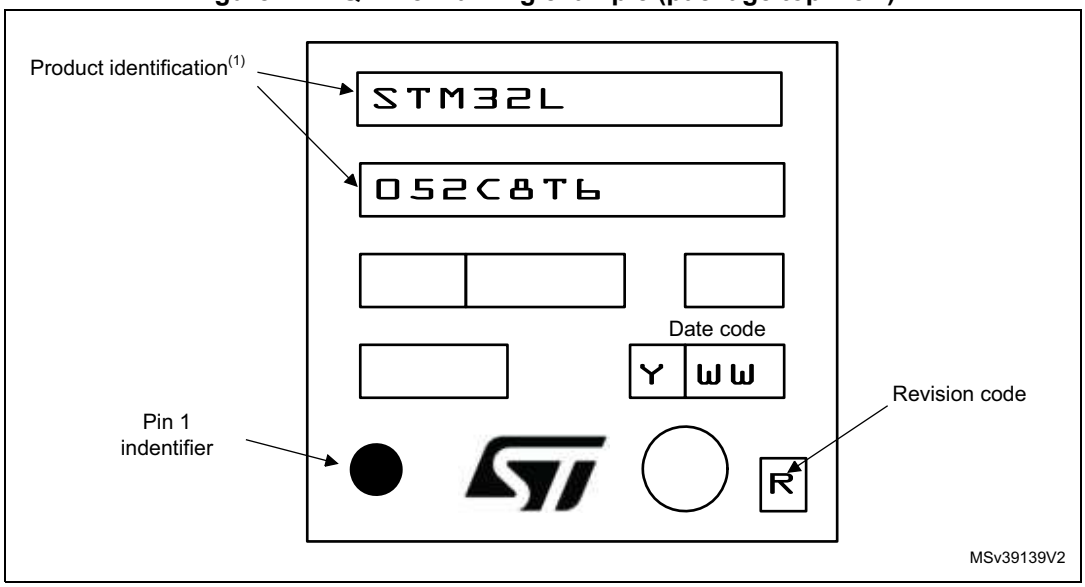

1. Parts marked as “ES”, “E” or accompanied by an Engineering Sample notification letter, are not yet qualified and therefore not approved for use in production. ST is not responsible for any consequences resulting from such use. In no event will ST be liable for the customer using any of these engineering samples in production. ST’s Quality department must be contacted prior to any decision to use these engineering samples to run a qualification activity.

7.4 UFQFPN48 package information

Figure 48. UFQFPN48 - 48 leads, 7x7 mm, 0.5 mm pitch, ultra thin fine pitch quad flat package outline

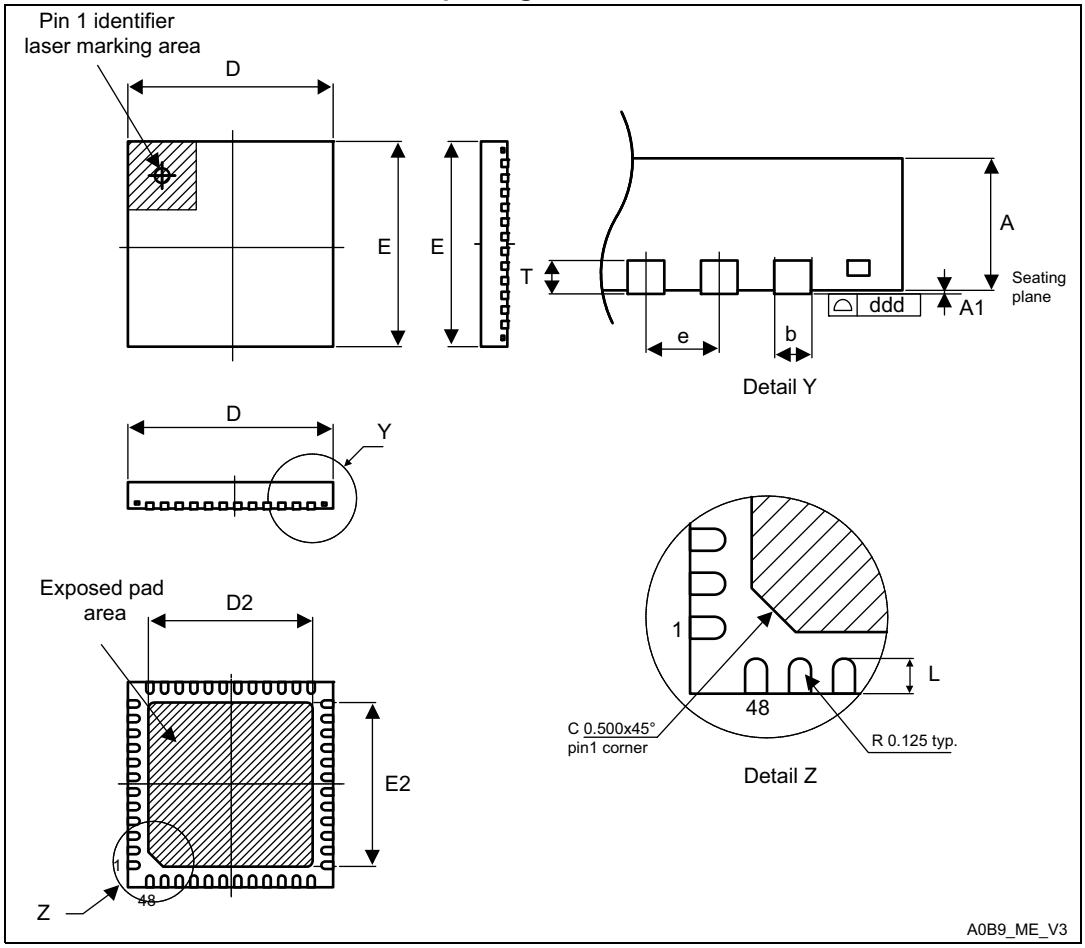

1. Drawing is not to scale.
2. All leads/pads should also be soldered to the PCB to improve the lead/pad solder joint life.
3. There is an exposed die pad on the underside of the UFQFPN package. It is recommended to connect and solder this back-side pad to PCB ground.

Table 84. UFQFPN48 - 48 leads, 7x7 mm, 0.5 mm pitch, ultra thin fine pitch quad flat package mechanical data

Symbol	millimeters			inches[1]		
	Min	Typ	Max	Min	Typ	Max
A	0.500	0.550	0.600	0.0197	0.0217	0.0236
A1	0.000	0.020	0.050	0.0000	0.0008	0.0020
D	6.900	7.000	7.100	0.2717	0.2756	0.2795
E	6.900	7.000	7.100	0.2717	0.2756	0.2795
D2	5.500	5.600	5.700	0.2165	0.2205	0.2244
E2	5.500	5.600	5.700	0.2165	0.2205	0.2244
L	0.300	0.400	0.500	0.0118	0.0157	0.0197
T	-	0.152	-	-	0.0060	-
b	0.200	0.250	0.300	0.0079	0.0098	0.0118
e	-	0.500	-	-	0.0197	-
ddd	-	-	0.080	-	-	0.0031

1. Values in inches are converted from mm and rounded to 4 decimal digits.

Figure 49. UFQFPN48 - 48 leads, 7x7 mm, 0.5 mm pitch, ultra thin fine pitch quad flat package recommended footprint

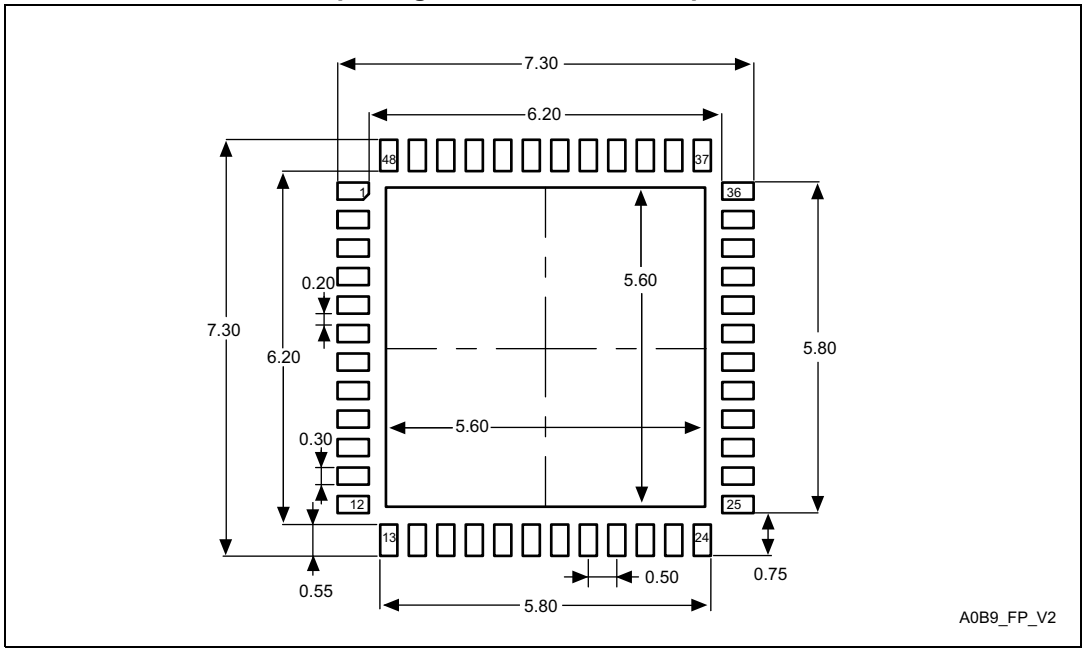

1. Dimensions are expressed in millimeters.

Device marking for UFQFPN48

The following figure gives an example of topside marking versus pin 1 position identifier location.

The printed markings may differ depending on the supply chain.

Other optional marking or inset/upset marks, which depend on supply chain operations, are not indicated below.

Figure 50. UFQFPN48 marking example (package top view)

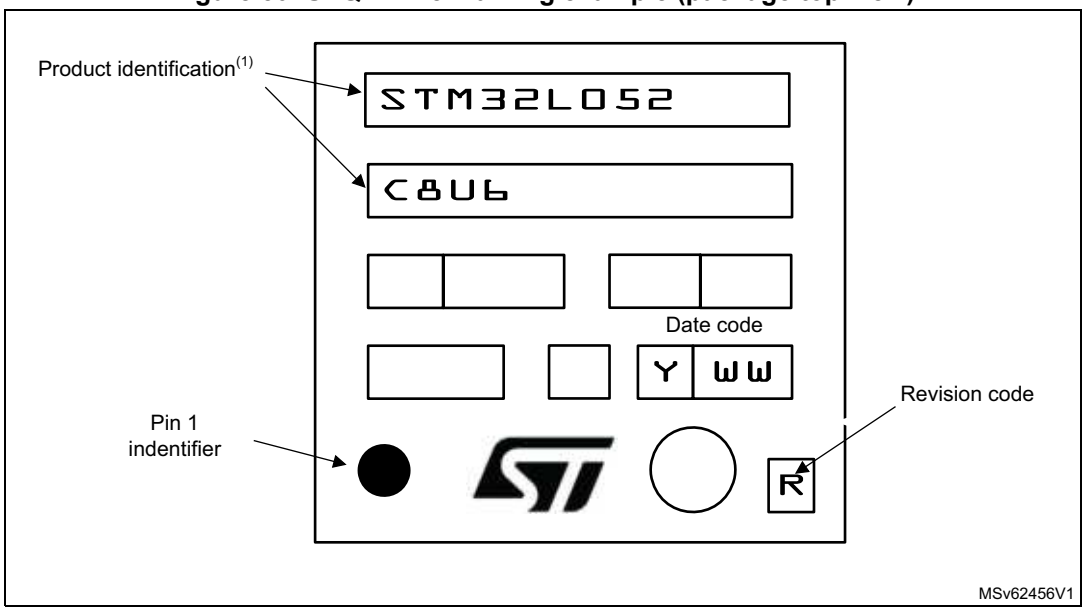

1. Parts marked as “ES”, “E” or accompanied by an Engineering Sample notification letter, are not yet qualified and therefore not approved for use in production. ST is not responsible for any consequences resulting from such use. In no event will ST be liable for the customer using any of these engineering samples in production. ST’s Quality department must be contacted prior to any decision to use these engineering samples to run a qualification activity.

7.5 Standard WLCSP36 package information

Figure 51. Standard WLCSP36 - 2.61 x 2.88 mm, 0.4 mm pitch wafer level chip scale package outline

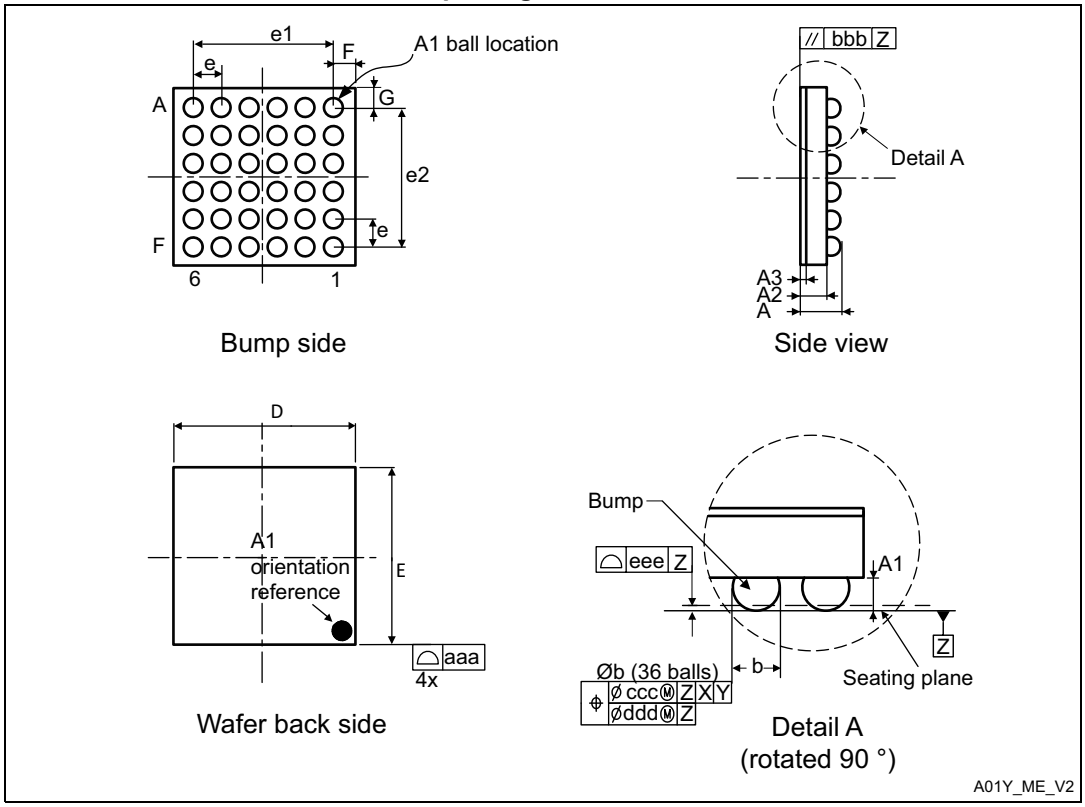

1. Drawing is not to scale.
2. b dimensions is measured at the maximum bump diameter parallel to primary datum Z

Table 85. Standard WLCSP36 - 2.61 x 2.88 mm, 0.4 mm pitch wafer level chip scale mechanical data

Symbol	millimeters			inches[1]		
	Min	Typ	Max	Min	Typ	Max
A	-	-	0.59	-	-	0.023
A1	-	0.18	-	-	0.007	-
A2	-	0.38	-	-	0.015	-
A3	-	0.025[2]	-	-	0.001	-
b	0.22	0.25	0.28	0.009	0.010	0.011
D	2.59	2.61	2.63	0.102	0.103	0.104
E	2.86	2.88	2.90	0.112	0.113	0.114
e	-	0.40	-	-	0.016	-
e1	-	2.00	-	-	0.079	-
e2	-	2.00	-	-	0.079	-

Table 85. Standard WLCSP36 - 2.61 x 2.88 mm, 0.4 mm pitch wafer level chip scale mechanical data (continued)

Symbol	millimeters			inches[1]		
	Min	Typ	Max	Min	Typ	Max
F	-	0.305[3]	-	-	0.012	-
G	-	0.440[3]	-	-	0.017	-
aaa	-	-	0.100	-	-	0.004
bbb	-	-	0.100	-	-	0.004
ccc	-	-	0.100	-	-	0.004
ddd	-	-	0.050	-	-	0.002
eee	-	-	0.050	-	-	0.002

1. Values in inches are converted from mm and rounded to the 3rd decimal place.
2. Nominal dimension rounded to the 3rd decimal place results from process capability.
3. Calculated dimensions are rounded to the 3rd decimal place.

Figure 52. Standard WLCSP36 - 2.61 x 2.88 mm, 0.4 mm pitch wafer level chip scale recommended footprint

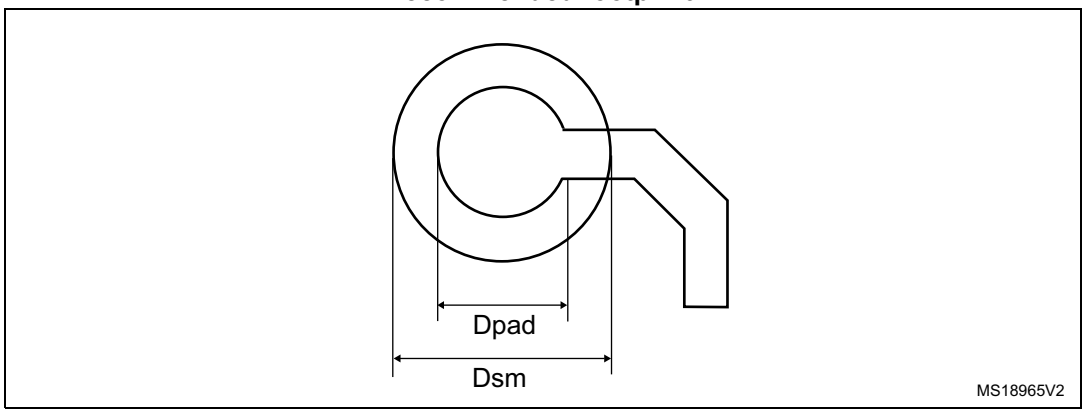

Table 86. Standard WLCSP36 recommended PCB design rules

Dimension	Recommended values
Pitch	0.4 mm
Dpad	260 µm max. (circular) 220 µm recommended
Dsm	300 µm min. (for 260 µm diameter pad)
PCB pad design	Non-solder mask defined via underbump allowed

Device marking for standard WLCSP36

The following figure gives an example of topside marking versus ball A 1 position identifier location.

The printed markings may differ depending on the supply chain.

Other optional marking or inset/upset marks, which depend on supply chain operations, are not indicated below.

Figure 53. Standard WLCSP36 marking example (package top view)

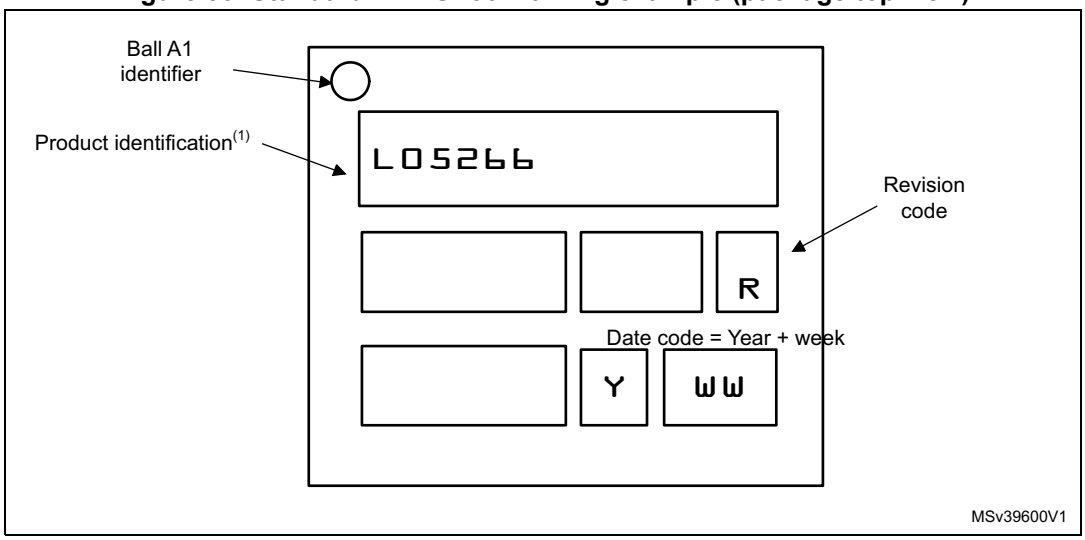

1. Parts marked as “ES”, “E” or accompanied by an Engineering Sample notification letter, are not yet qualified and therefore not approved for use in production. ST is not responsible for any consequences resulting from such use. In no event will ST be liable for the customer using any of these engineering samples in production. ST’s Quality department must be contacted prior to any decision to use these engineering samples to run a qualification activity.

7.6 Thin WLCSP36 package information

Figure 54. Thin WLCSP36 - 2.61 x 2.88 mm, 0.4 mm pitch wafer level chip scale package outline

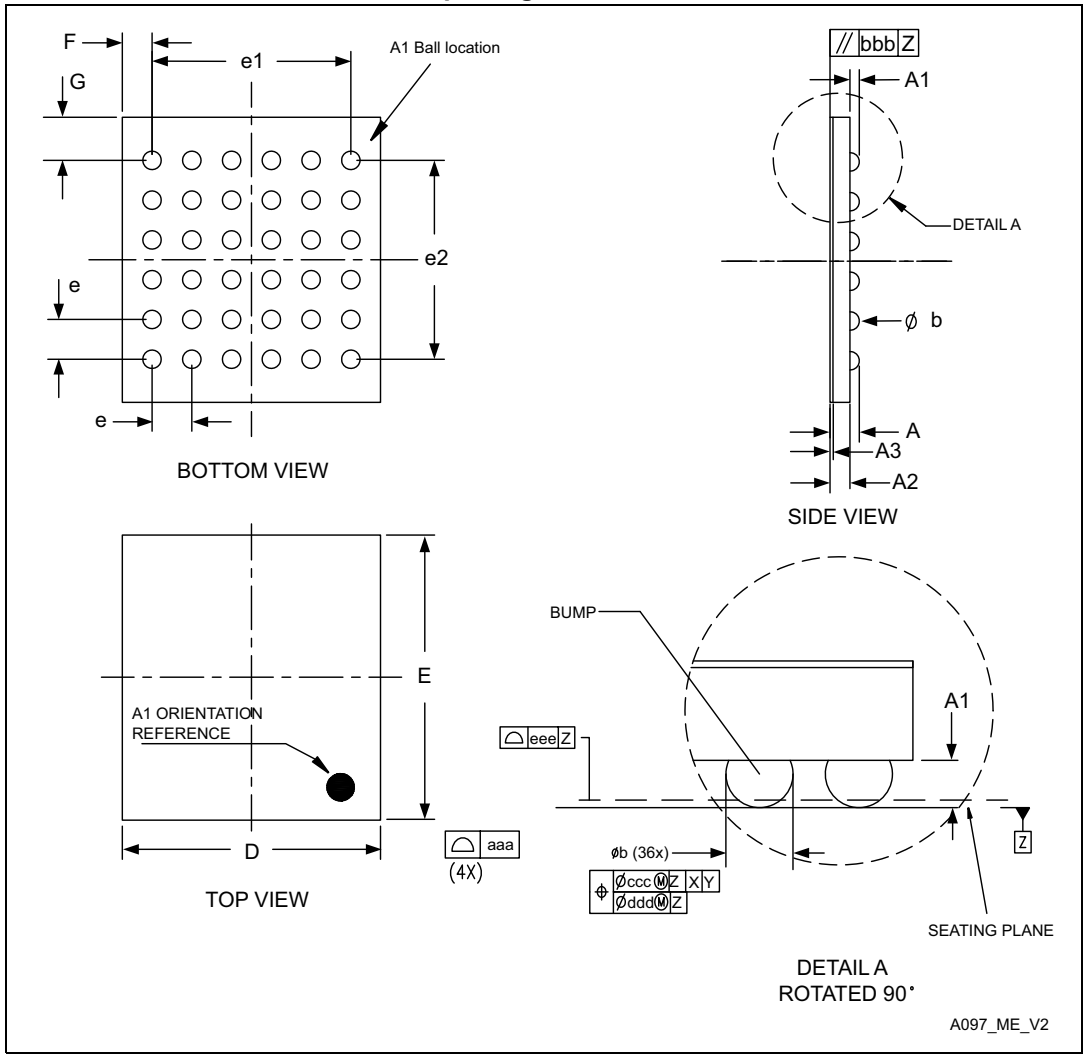

1. Drawing is not to scale.
2. b dimensions is measured at the maximum bump diameter parallel to primary datum Z.
3. Primary datum Z and seating plane are defined by the spherical crowns of the bump.
4. Bump position designation per JESD 95-1, SPP-010.

Table 87. Thin WLCSP36 - 2.61 x 2.88 mm, 0.4 mm pitch wafer level chip scale package mechanical data

Symbol	millimeters			inches[1]		
	Min	Typ	Max	Min	Typ	Max
A	-	-	0.33	-	-	0.013
A1	-	0.10	-	-	0.004	-
A2	-	0.20	-	-	0.008	-
A3	-	0.025[2]	-	-	0.001	-
b	0.16	0.19	0.22	0.006	0.007	0.009
D	2.59	2.61	2.63	0.102	0.103	0.104
E	2.86	2.88	2.90	0.112	0.113	0.114
e	-	0.40	-	-	0.016	-
e1	-	2.00	-	-	0.079	-
e2	-	2.00	-	-	0.079	-
F	-	0.305[3]	-	-	0.012	-
G	-	0.440[3]	-	-	0.017	-
aaa	-	-	0.10	-	-	0.004
bbb	-	-	0.10	-	-	0.004
ccc	-	-	0.10	-	-	0.004
ddd	-	-	0.05	-	-	0.002
eee	-	-	0.05	-	-	0.002

1. Values in inches are converted from mm and rounded to the 3rd decimal place.
2. Back side coating. Nominal dimension rounded to the 3rd decimal place results from process capability.
3. Calculated dimensions are rounded to 3rd decimal place.

Figure 55. Thin WLCSP36 - 2.61 x 2.88 mm, 0.4 mm pitch wafer level chip scale package recommended footprint

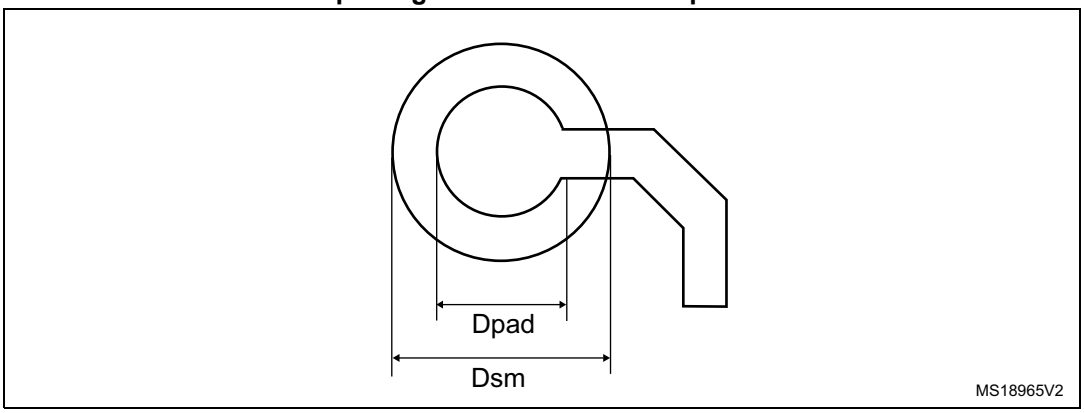

Table 88. WLCSP36 recommended PCB design rules

Dimension	Recommended values
Pitch	0.4 mm
Dpad	260 µm max. (circular) 220 µm recommended
Dsm	300 µm min. (for 260 µm diameter pad)
PCB pad design	Non-solder mask defined via underbump allowed

Device marking for standard WLCSP36

The following figure gives an example of topside marking versus ball A 1 position identifier location.

The printed markings may differ depending on the supply chain.

Other optional marking or inset/upset marks, which depend on supply chain operations, are not indicated below.

Figure 56. Standard WLCSP36 marking example (package top view)

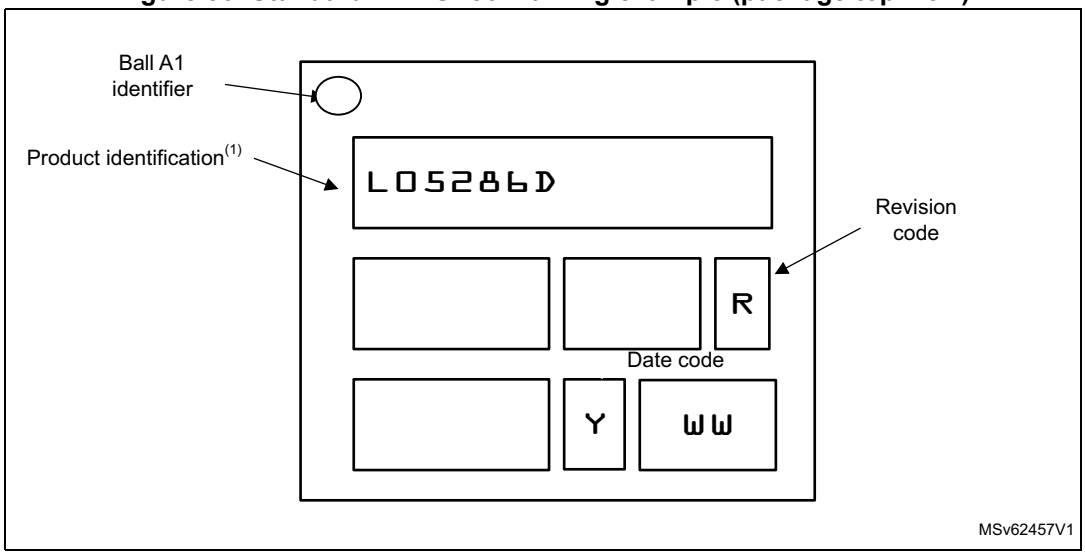

1. Parts marked as “ES”, “E” or accompanied by an Engineering Sample notification letter, are not yet qualified and therefore not approved for use in production. ST is not responsible for any consequences resulting from such use. In no event will ST be liable for the customer using any of these engineering samples in production. ST’s Quality department must be contacted prior to any decision to use these engineering samples to run a qualification activity.

7.7 LQFP32 package information

Figure 57. LQFP32 - 32-pin, 7 x 7 mm low-profile quad flat package outline

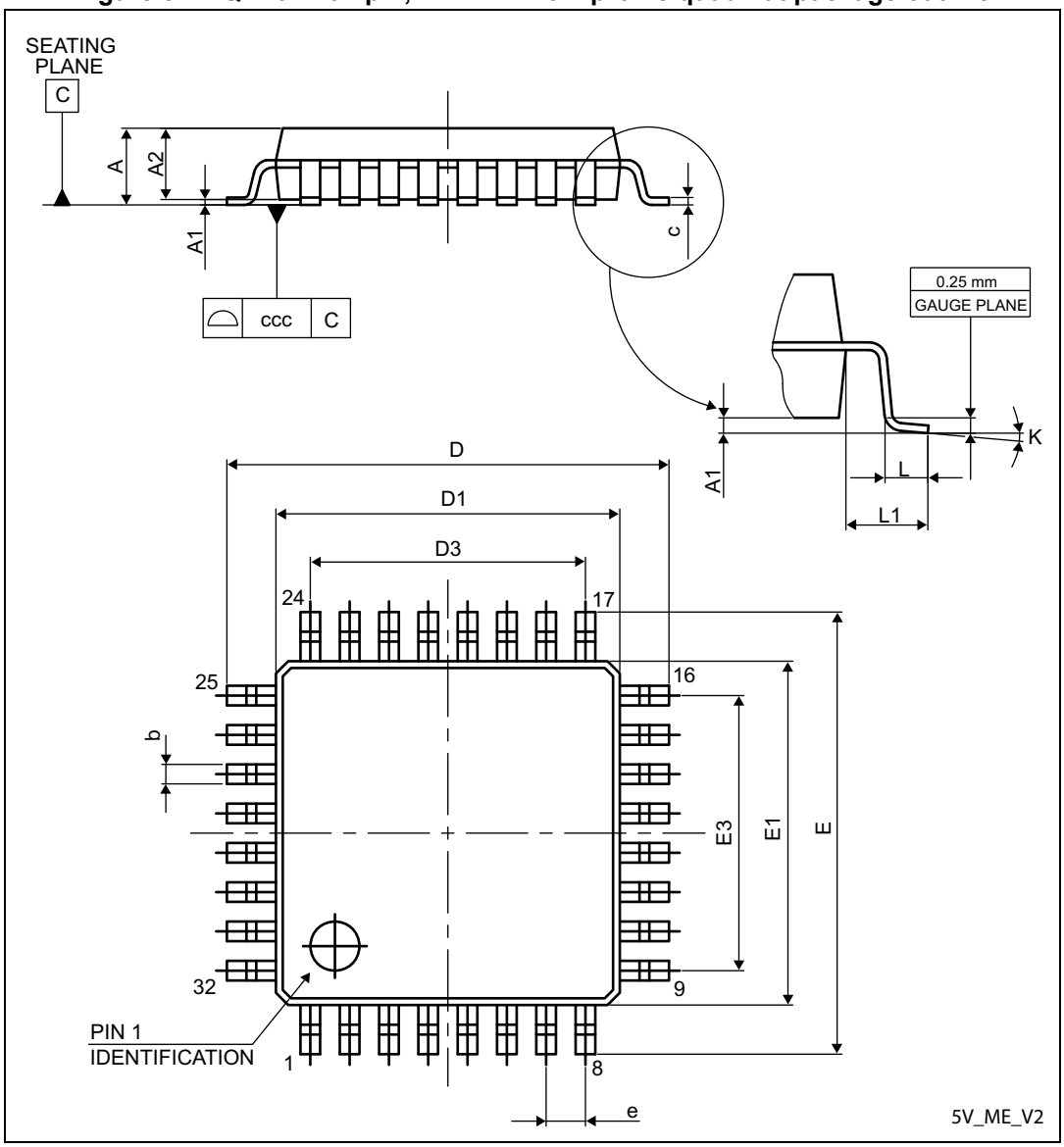

1. Drawing is not to scale.

Table 89. LQFP32 - 32-pin, 7 x 7 mm low-profile quad flat package mechanical data

Symbol	millimeters			inches[1]		
	Min	Typ	Max	Min	Typ	Max
A	-	-	1.600	-	-	0.0630
A1	0.050	-	0.150	0.0020	-	0.0059
A2	1.350	1.400	1.450	0.0531	0.0551	0.0571
b	0.300	0.370	0.450	0.0118	0.0146	0.0177
c	0.090	-	0.200	0.0035	-	0.0079
D	8.800	9.000	9.200	0.3465	0.3543	0.3622
D1	6.800	7.000	7.200	0.2677	0.2756	0.2835
D3	-	5.600	-	-	0.2205	-
E	8.800	9.000	9.200	0.3465	0.3543	0.3622
E1	6.800	7.000	7.200	0.2677	0.2756	0.2835
E3	-	5.600	-	-	0.2205	-
e	-	0.800	-	-	0.0315	-
L	0.450	0.600	0.750	0.0177	0.0236	0.0295
L1	-	1.000	-	-	0.0394	-
k	0°	3.5°	7°	0°	3.5°	7°
ccc	-	-	0.100	-	-	0.0039

1. Values in inches are converted from mm and rounded to 4 decimal digits.

Figure 58. LQFP32 - 32-pin, 7 x 7 mm low-profile quad flat recommended footprint

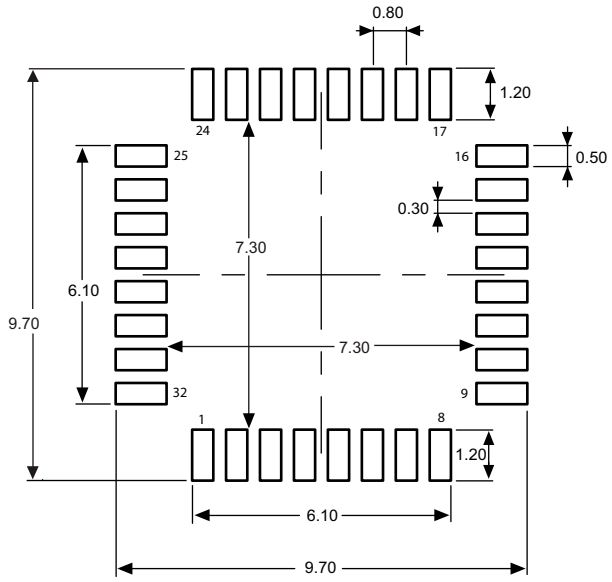

1. Dimensions are expressed in millimeters.

Device marking for LQFP32

The following figure gives an example of topside marking versus pin 1 position identifier location.

The printed markings may differ depending on the supply chain.

Other optional marking or inset/upset marks, which depend on supply chain operations, are not indicated below.

Figure 59. LQFP32 marking example (package top view)

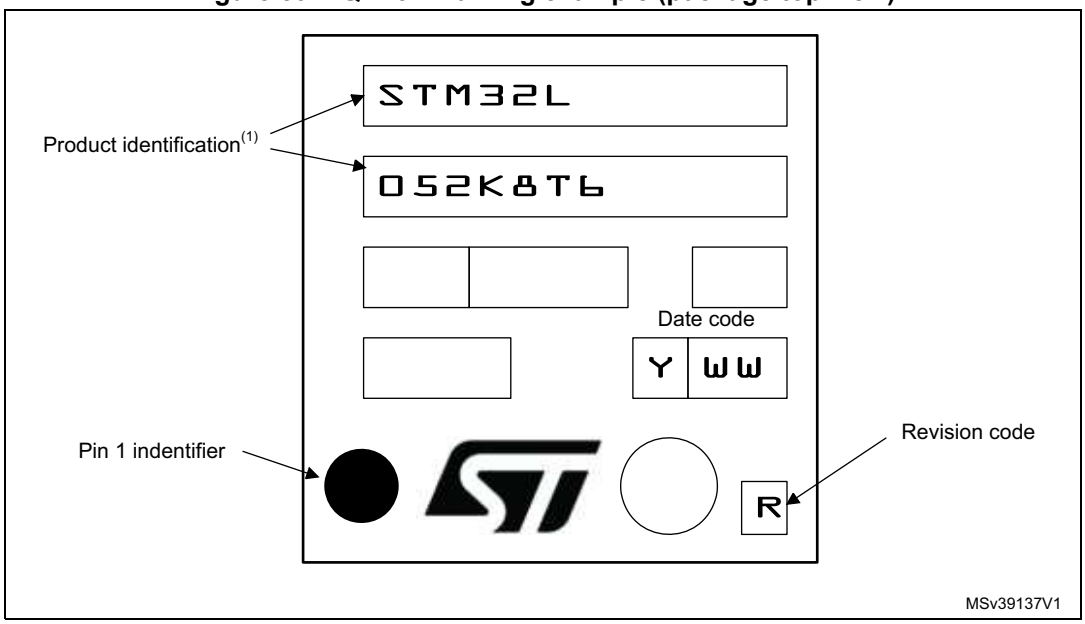

1. Parts marked as “ES”, “E” or accompanied by an Engineering Sample notification letter, are not yet qualified and therefore not approved for use in production. ST is not responsible for any consequences resulting from such use. In no event will ST be liable for the customer using any of these engineering samples in production. ST’s Quality department must be contacted prior to any decision to use these engineering samples to run a qualification activity.

7.8 UFQFPN32 package information

Figure 60. UFQFPN32 - 32-pin, 5x5 mm, 0.5 mm pitch ultra thin fine pitch quad flat package outline

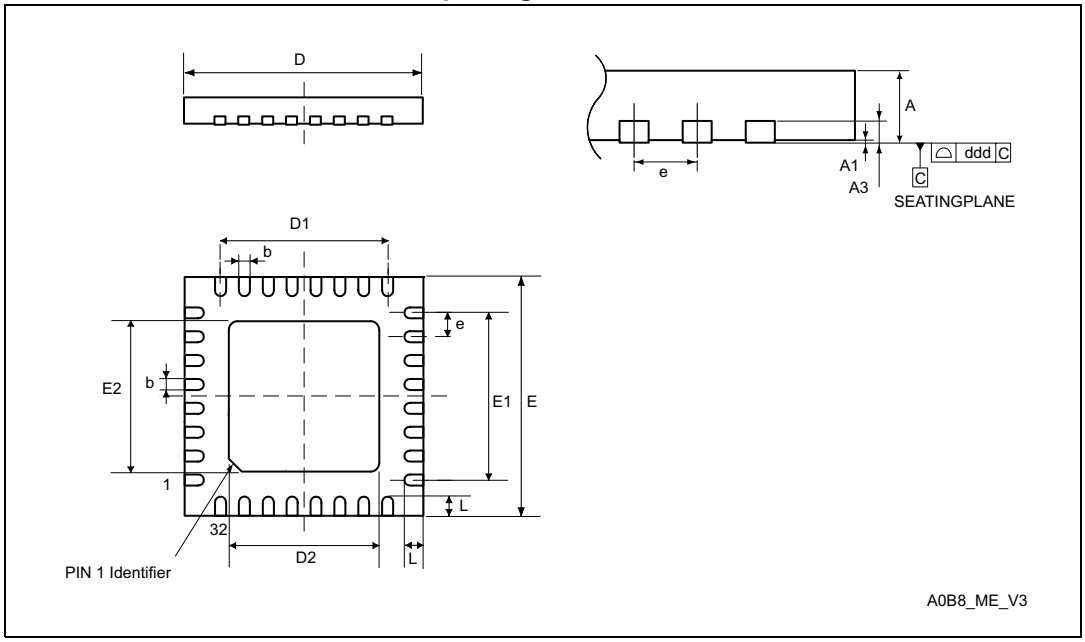

1. Drawing is not to scale.
2. There is an exposed die pad on the underside of the UFQFPN package. It is recommended to connect and solder this backside pad to PCB ground.

Table 90. UFQFPN32 - 32-pin, 5x5 mm, 0.5 mm pitch ultra thin fine pitch quad flat package mechanical data

Symbol	millimeters			inches[1]		
	Min	Typ	Max	Min	Typ	Max
A	0.500	0.550	0.600	0.0197	0.0217	0.0236
A1	-	-	0.050	-	-	0.0020
A3	-	0.152	-	-	0.0060	-
b	0.180	0.230	0.280	0.0071	0.0091	0.0110
D	4.900	5.000	5.100	0.1929	0.1969	0.2008
D1	3.400	3.500	3.600	0.1339	0.1378	0.1417
D2	3.400	3.500	3.600	0.1339	0.1378	0.1417
E	4.900	5.000	5.100	0.1929	0.1969	0.2008
E1	3.400	3.500	3.600	0.1339	0.1378	0.1417
E2	3.400	3.500	3.600	0.1339	0.1378	0.1417
e	-	0.500	-	-	0.0197	-
L	0.300	0.400	0.500	0.0118	0.0157	0.0197
ddd	-	-	0.080	-	-	0.0031

1. Values in inches are converted from mm and rounded to 4 decimal digits.

Figure 61. UFQFPN32 - 32-pin, 5x5 mm, 0.5 mm pitch ultra thin fine pitch quad flat recommended footprint

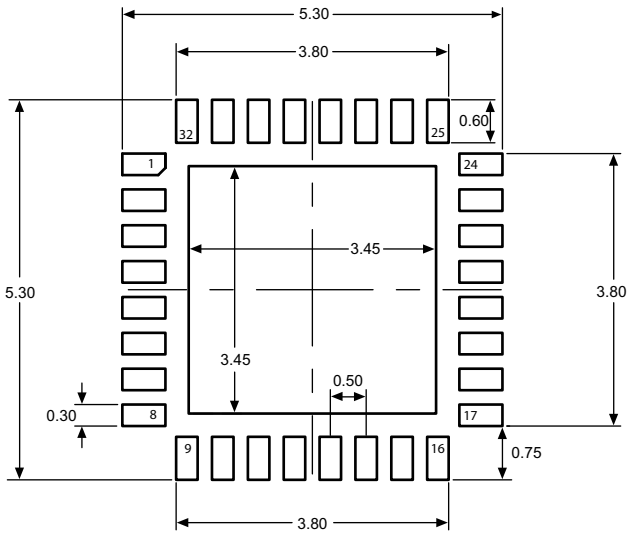

1. Dimensions are expressed in millimeters.

Device marking for UFQFPN32

The following figure gives an example of topside marking versus pin 1 position identifier location.

The printed markings may differ depending on the supply chain.

Other optional marking or inset/upset marks, which depend on supply chain operations, are not indicated below.

Figure 62. UFQFPN32 marking example (package top view)

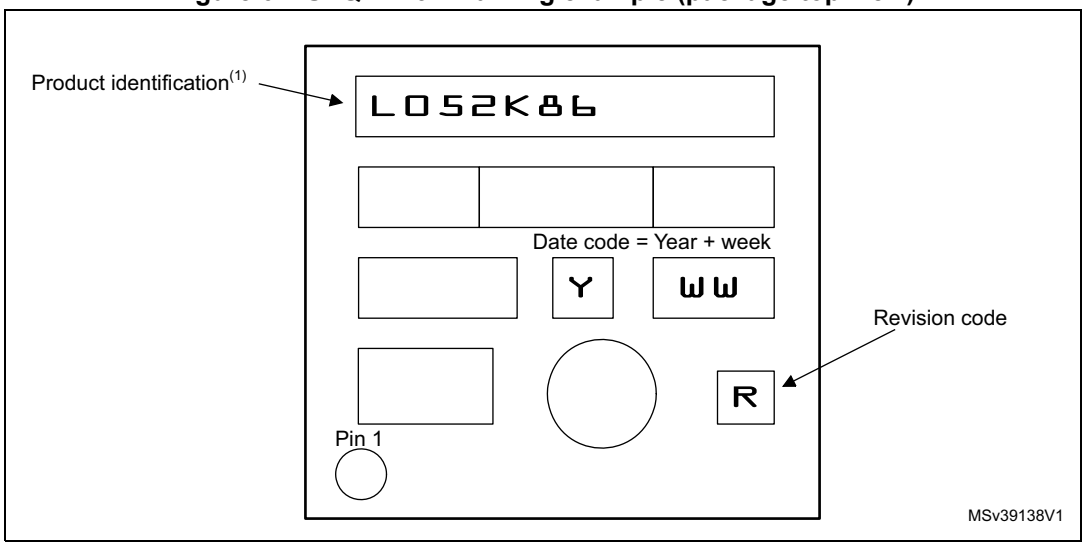

1. Parts marked as “ES”, “E” or accompanied by an Engineering Sample notification letter, are not yet qualified and therefore not approved for use in production. ST is not responsible for any consequences resulting from such use. In no event will ST be liable for the customer using any of these engineering samples in production. ST’s Quality department must be contacted prior to any decision to use these engineering samples to run a qualification activity.

7.9 Thermal characteristics

The maximum chip-junction temperature, T_J max, in degrees Celsius, may be calculated using the following equation:

T_J max = T_A max + (P_D max × Θ_{JA})

Where:

- T_A max is the maximum ambient temperature in °C,
- Θ_{JA} is the package junction-to-ambient thermal resistance, in °C/W,
- P_D max is the sum of P_{INT} max and $P_{I/O}$ max (P_D max = P_{INT} max + $P_{I/O}$max),
- P_{INT} max is the product of I_{DD} and V_{DD}, expressed in Watts. This is the maximum chip internal power.

$P_{I/O}$ max represents the maximum power dissipation on output pins where:

$P_{I/O}$ max = Σ (V_{OL} × I_{OL}) + Σ((V_{DD} – V_{OH}) × I_{OH}),

taking into account the actual V_{OL} / I_{OL} and V_{OH} / I_{OH} of the I/Os at low and high level in the application.

Table 91. Thermal characteristics

Symbol	Parameter	Value	Unit
Θ_{JA}	**Thermal resistance junction-ambient** TFBGA64 - 5 x 5 mm / 0.5 mm pitch	61	°C/W
	Thermal resistance junction-ambient LQFP64 - 10 x 10 mm / 0.5 mm pitch	45	
	Thermal resistance junction-ambient Standard WLCSP36 - 0.4 mm pitch	63	
	Thermal resistance junction-ambient Thin WLCSP36 - 0.4 mm pitch	59	
	Thermal resistance junction-ambient LQFP48 - 7 x 7 mm / 0.5 mm pitch	55	
	Thermal resistance junction-ambient LQFP32 - 7 x 7 mm / 0.8 mm pitch	57	
	Thermal resistance junction-ambient UFQFPN32 - 5 x 5 mm / 0.5 mm pitch	38	
	Thermal resistance junction-ambient UFQFPN48 - 7 x 7 mm / 0.5 mm pitch	31	

Figure 63. Thermal resistance

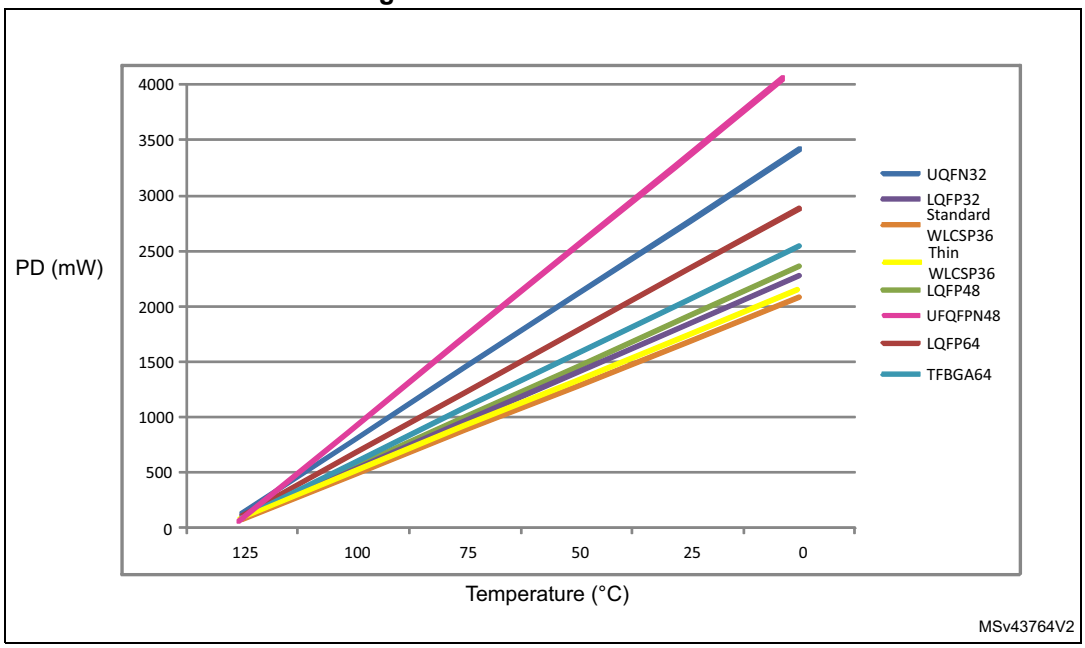

7.9.1 Reference document

JESD51-2 Integrated Circuits Thermal Test Method Environment Conditions - Natural Convection (Still Air). Available from www.jedec.org.

8 Ordering information

Example: STM32 L 052 R 8 T 6 D TR

Device family

STM32 = Arm-based 32-bit microcontroller

Product type

L = Low power

Device subfamily

052 = USB

Pin count

K = 32 pins

T = 36 pins

C = 48/49 pins

R = 64 pins

Flash memory size

6 = 32 Kbytes

8 = 64 Kbytes

Package

T = LQFP

H = TFBGA

U = UFQFPN

Y = Standard WLCSP

F = Thin WLCSP

Temperature range

6 = Industrial temperature range, –40 to 85 °C

7 = Industrial temperature range, –40 to 105 °C

3 = Industrial temperature range, –40 to 125 °C

Options

No character = V_{DD} range: 1.8 to 3.6 V and BOR enabled

D = V_{DD} range: 1.65 to 3.6 V and BOR disabled

Packing

TR = tape and reel

No character = tray or tube

For a list of available options (speed, package, etc.) or for further information on any aspect of this device, please contact your nearest ST sales office.

9 Revision history

Table 92. Document revision history

Date	Revision	Changes
27-Feb-2014	1	Initial release.
29-Apr-2014	2	Added WLCSP36 package. Updated *Table 2: Ultra-low-power STM32L052x6/x8 device features and peripheral counts* Updated *Figure 4: STM32L052x6/8 TFBGA64 ballout*. Updated *Table 5: Functionalities depending on the working mode (from Run/active down to standby)*. Added *Section 3.2: Interconnect matrix*. Replaced TTa I/O structure by TC, updated PA0/4/5, PC5/14, BOOT0 and NRST I/O structure, and added note 3 in *Table 16: STM32L052x6/8 pin definitions*. Updated *Table 25: General operating conditions*, *Table 22: Voltage characteristics* and *Table 23: Current characteristics*. Modified conditions in *Table 28: Embedded internal reference voltage*. Updated *Table 29: Current consumption in Run mode, code with data processing running from Flash*, *Table 31: Current consumption in Run mode, code with data processing running from RAM*, *Table 33: Current consumption in Sleep mode*, *Table 34: Current consumption in Low-power run mode*, *Table 35: Current consumption in Low-power sleep mode*, and *Table 36: Typical and maximum current consumptions in Stop modeTable 37: Typical and maximum current consumptions in Standby mode*. Added *Figure 14: IDD vs VDD, at TA= 25/55/85/105 °C, Run mode, code running from Flash memory, Range 2, HSE, 1WS*, *Figure 15: IDD vs VDD, at TA= 25/55/85/105 °C, Run mode, code running from Flash memory, Range 2, HSI16, 1WS*, *Figure 16: IDD vs VDD, at TA= 25/55/ 85/105/125 °C, Low-power run mode, code running from RAM, Range 3, MSI (Range 0) at 64 KHz, 0 WS*, *Figure 17: IDD vs VDD, at TA= 25/55/ 85/105/125 °C, Stop mode with RTC enabled and running on LSE Low drive* and *Figure 18: IDD vs VDD, at TA= 25/55/85/105/125 °C, Stop mode with RTC disabled, all clocks OFF*. Updated *Table 44: HSE oscillator characteristics* and *Table 45: LSE oscillator characteristics*. Added *Figure 23: HSI16 minimum and maximum value versus temperature*. Updated *Table 56: ESD absolute maximum ratings*, *Table 58: I/O current injection susceptibility* and *Table 59: I/O static characteristics*, and added *Figure 24: VIH/VIL versus VDD (CMOS I/Os)* and *Figure 25: VIH/VIL versus VDD (TTL I/Os)*. Updated *Table 60: Output voltage characteristics*, *Table 61: I/O AC characteristics*, and *Figure 26: I/O AC characteristics definition*. Updated *Table 63: ADC characteristics*, *Table 65: ADC accuracy*, and *Figure 29: Typical connection diagram using the ADC*. Updated *Table 68: Temperature sensor characteristics*. Updated *Table 73: SPI characteristics in voltage Range 1* and *Table 76: I2S characteristics*. Added *Figure 63: Thermal resistance*.

Table 92. Document revision history (continued)

Date	Revision	Changes
25-Jun-2014	3	Cover page: changed LQFP32 size, updated core speed, added minimum supply voltage for ADC, DAC and comparators. ADC now guaranteed down to 1.65 V. Updated list of applications in *Section 1: Introduction*. Changed number of I2S interfaces to one in *Section 2: Description*. Updated *Table 2: Ultra-low-power STM32L052x6/x8 device features and peripheral counts*. Updated RTC/TIM21 in *Table 6: STM32L052x6/8 peripherals interconnect matrix*. Updated *Table 3: Functionalities depending on the operating power supply range*. Split LQFP32/UFQFPN32 pinout schematics into two distinct figures: *Figure 8* and *Figure 9*. Added note related to WLCSP36 package in *Table 16: STM32L052x6/8 pin definitions*. Updated *Section 3.4.1: Power supply schemes*. Updated V_{DDA} in *Table 25: General operating conditions*. Splitted Table *Current consumption in Run mode, code with data processing running from Flash* into *Table 29* and *Table 30* and content updated. Split Table *Current consumption in Run mode, code with data processing running from RAM* into *Table 31* and *Table 32* and content updated. Updated *Table 33: Current consumption in Sleep mode*, *Table 34: Current consumption in Low-power run mode*, *Table 35: Current consumption in Low-power sleep mode*, *Table 36: Typical and maximum current consumptions in Stop mode*, *Table 37: Typical and maximum current consumptions in Standby mode*, and added *Table 38: Average current consumption during Wakeup*. Updated *Table 39: Peripheral current consumption in Run or Sleep mode* and added *Table 40: Peripheral current consumption in Stop and Standby mode*. Updated *Table 47: HSI48 oscillator characteristics*. Removed note 1 below *Figure 21: HSE oscillator circuit diagram*. Updated t_{LOCK} in *Table 50: PLL characteristics*. Updated *Table 52: Flash memory and data EEPROM characteristics* and *Table 53: Flash memory and data EEPROM endurance and retention*. Updated *Table 61: I/O AC characteristics*. Updated *Table 63: ADC characteristics*. Updated *Figure 63: Thermal resistance* and added note 1.

Table 92. Document revision history (continued)

Date	Revision	Changes
05-Sep-2014	4	Extended operating temperature range to 125 °C. Updated minimum ADC operating voltage to 1.65 V. Changed number of I2S interface from 1 to 0 in *Table 2: Ultra-low-power STM32L052x6/x8 device features and peripheral counts*. Replaced USART3 by LPUART1 in *Table 16: STM32L052x6/8 pin definitions* and LPUART by LPUART1 in *Table 17: Alternate function port A*, *Table 18: Alternate function port B*, *Table 19: Alternate function port C*, *Table 20: Alternate function port D* and *Table 21: Alternate function port H*. Updated PA6 in *Table 17: Alternate function port A*. Updated temperature range in *Section 2: Description*, *Table 2: Ultra-low-power STM32L052x6/x8 device features and peripheral counts*. Updated P_D, $T_{A\ and}$ T_J to add range 3 in *Table 25: General operating conditions*. Added range 3 in *Table 53: Flash memory and data EEPROM endurance and retention*, *Table ：*. Update note 1 in *Table 29: Current consumption in Run mode, code with data processing running from Flash*, *Table 31: Current consumption in Run mode, code with data processing running from RAM*, *Table 33: Current consumption in Sleep mode*, *Table 34: Current consumption in Low-power run mode*, *Table 34: Current consumption in Low-power run mode*, *Table 36: Typical and maximum current consumptions in Stop mode*, *Table 37: Typical and maximum current consumptions in Standby mode* and *Table 41: Low-power mode wakeup timings*. Updated *Figure 63: Thermal resistance* and removed note 1. Updated *Figure 16: IDD vs VDD, at TA= 25/55/85/105/125 °C, Low-power run mode, code running from RAM, Range 3, MSI (Range 0) at 64 KHz, 0 WS*, *Figure 17: IDD vs VDD, at TA= 25/55/85/105/125 °C, Stop mode with RTC enabled and running on LSE Low drive*, *Figure 18: IDD vs VDD, at TA= 25/55/85/105/125 °C, Stop mode with RTC disabled, all clocks OFF*. Updated *Table 37: Typical and maximum current consumptions in Standby mode*. Updated SYSCFG in *Table 39: Peripheral current consumption in Run or Sleep mode*. Updated *Table 40: Peripheral current consumption in Stop and Standby mode* and *Table 43: Low-speed external user clock characteristics*. Updated ACC_{HSI16} temperature conditions in *Table 46: 16 MHz HSI16 oscillator characteristics*. Changed ambient temperature range in note 1 below *Table 47: HSI48 oscillator characteristics*. Updated $V_{F(NRST)}$ and $V_{NF(NRST)}$ in *Table 62: NRST pin characteristics*. Updated *Table 63: ADC characteristics* and *Table 65: ADC accuracy*. Added range 3 in *Table ：*.

Table 92. Document revision history (continued)

Date	Revision	Changes
23-Jul-2015	5	Updated all pinout/ballout schematics except for LQFP32 to highlight pin/ball supplied through VDD_USB. Updated *Table 16: STM32L052x6/8 pin definitions* PC5 as FT pin. Updated *Figure 5: STM32L052x6/8 LQFP48 pinout*, *Figure 3: STM32L052x6/8 LQFP64 pinout* and *Figure 4: STM32L052x6/8 TFBGA64 ballout*. Updated *Figure 59*, *Figure 62*, *Figure 50*, *Figure 41* and *Figure 44* device marking example. Updated current consumption in Run mode in *Section : Features*. ADC no more available in Low-power run and Low-power Sleep modes in *Table 5: Functionalities depending on the working mode (from Run/active down to standby)*. Updated ES disclaimer. Added CSP outline. Updated *Table 22: Voltage characteristics* adding VDDA-VDDX variations and adding note 3. Renamed BOOT1 into nBOOT1. Added t_{UP_LDO} in *Table 63: ADC characteristics*. Updated LQFP32 pinout (PC14). Updated MSI oscillator temperature frequency drift in Table MSI oscillator characteristics. Added note related to Standby mode in table Peripheral current consumption in Stop /standby. Updated *Section 1: Introduction* packages from 32 pins to 64 pins. I^2C interface characteristics: updated introduction and characteristics table. Changed USARTx_RTS into USARTx_RTS_DE and LPUARTx_RTS into LPUARTx_RTS_DE. Changed temperature condition in *Table 8: Internal voltage reference measured values* and *Table 27: Embedded internal reference voltage calibration values*. Updated T_{Coeff} in *Table 28: Embedded internal reference voltage*. Updated *Figure 16: IDD vs VDD, at TA= 25/55/ 85/105/125 °C, Low-power run mode, code running from RAM, Range 3, MSI (Range 0) at 64 KHz, 0 WS*, *Figure 17: IDD vs VDD, at TA= 25/55/ 85/105/125 °C, Stop mode with RTC enabled and running on LSE Low drive* and *Figure 18: IDD vs VDD, at TA= 25/55/85/105/125 °C, Stop mode with RTC disabled, all clocks OFF*. Updated *Table 14: SPI/I2S implementation* removing Rx/Tx FIFO and NSS pulse mode rows. Updated I_{lkg} in *Table 59: I/O static characteristics*. Updated VDD_USB in *Table 25: General operating conditions*. Updated *Table 2: Ultra-low-power STM32L052x6/x8 device features and peripheral counts* 2 comparators for all devices. Updated *Table 16: STM32L052x6/8 pin definitions* VDD and VDD_USB connected to respectively E5 and E6. Updated *Table 54: EMS characteristics* LQFP64 conditions and level/class 3B.

Table 92. Document revision history (continued)

Date	Revision	Changes
11-Mar-2016	6	Updated number of SPIs on cover page and in *Table 2: Ultra-low-power STM32L052x6/x8 device features and peripheral counts*. Changed minimum comparator supply voltage to 1.65 V on cover page. Added number of fast and standard channels in *Section 3.11: Analog-to-digital converter (ADC)*. Updated *Section 3.18.2: Universal synchronous/asynchronous receiver transmitter (USART)* and *Section 3.18.4: Serial peripheral interface (SPI)/Inter-integrated sound (I2S)* to mention the fact that USARTs with synchronous mode feature can be used as SPI master interfaces. Added baudrate allowing to wake up the MCU from Stop mode in *Section 3.18.2: Universal synchronous/asynchronous receiver transmitter (USART)* and *Section 3.18.3: Low-power universal asynchronous receiver transmitter (LPUART)*. In *Section 6: Electrical characteristics*, updated notes related to values guaranteed by characterization. Updated *Table 58: I/O current injection susceptibility*. Updated *Figure 7: STM32L052x6/8 WLCSP36 ballout*, *Figure 9: STM32L052x6/8 UFQFPN32 pinout* removing grey PA11, PA12 pins and removing note 2. Updated *Table 55: EMI characteristics*. Changed temperature condition in *Table 8: Internal voltage reference measured values* and *Table 27: Embedded internal reference voltage calibration values*. *Section 6.3.15: 12-bit ADC characteristics*: – *Table 63: ADC characteristics*: Distinction made between V_{DDA} for fast and standard channels; added note 1 Added note 4 related to R_{ADC}. Updated f_{TRIG}.. Updated t_S and t_{CONV}. – Updated equation 1 description. – Updated *Table 64: R_{AIN} max for f_{ADC} = 16 MHz* for f_{ADC} = 16 MHz and distinction made between fast and standard channels. Updated R_O and added Note 2 in *Table 66: DAC characteristics*. Added *Table 64: RAIN max for fADC = 16 MHz*. Updated *Figure 50: UFQFPN48 marking example (package top view)*.

Table 92. Document revision history (continued)

Date	Revision	Changes
07-Mar-2017	7	Added thin WLCSP36 package. Updated number of I2S interfaces and removed I2S for STM32L052T8 in *Table 2: Ultra-low-power STM32L052x6/x8 device features and peripheral counts*. In *Section 4: Pin descriptions*, renamed USB_OE into USB_NOE. Added mission profile compliance with JEDEC JESD47 in *Section 6.2: Absolute maximum ratings*. Added note 2. related to the position of the external capacitor below *Figure 27: Recommended NRST pin protection*. Updated R_L in *Table 63: ADC characteristics*. Updated *Figure 32: 12-bit buffered/non-buffered DAC* and added note below figure. Updated t_{AF} maximum value for range 1 in *Table 72: I2C analog filter characteristics*. Updated $t_{WUUSART}$ description in *Table 73: USART/LPUART characteristics*. NSS timing waveforms updated in *Figure 33: SPI timing diagram - slave mode and CPHA = 0* and *Figure 34: SPI timing diagram - slave mode and CPHA = 1*(1). Previous WLCSP36 package renamed “Standard” WLCSP36; added Note *2.* below *Figure 51: Standard WLCSP36 - 2.61 x 2.88 mm, 0.4 mm pitch wafer level chip scale package outline* and updated *Table 85: Standard WLCSP36 - 2.61 x 2.88 mm, 0.4 mm pitch wafer level chip scale mechanical data*. Added reference to optional marking or inset/upset marks in all package device marking sections.
11-Sep-2017	8	Memories and I/Os moved after Core in *Features*. Removed column "I/O operation" from *Table 3: Functionalities depending on the operating power supply range* and added note related to GPIO speed. Updated V_{DD_USB} in *Section 3.4.1: Power supply schemes*. In *Section 5: Memory mapping*, replaced memory mapping schematic by reference to the reference manual. Removed *Table 90: USART/LPUART characteristics*. Updated *Figure 42: TFBGA64 – 64-ball, 5 x 5 mm, 0.5 mm pitch thin profile fine pitch ball grid array package outline*. Updated note below marking schematics.

Table 92. Document revision history (continued)

Date	Revision	Changes
08-Oct-2019	9	Added UFQFPN48 package. Updated Arm logo and added Arm word mark notice in *Section 1: Introduction*. Removed Cortex and USB logos. Updated *Table 5: Functionalities depending on the working mode (from Run/active down to standby)* to change I2C functionality to disabled in Low-power Run and Low-power Sleep modes. Changed USARTx_RTS, USARTx_RTS_DE into USARTx_RTS/USARTx_DE, and LPUART1_RTS, LPUART1_RTS_DE into LPUART1_RTS/LPUART1_DE in *Section 4: Pin descriptions* and in all alternate function tables. Updated V_{DD_USB} description in *Section 3.4.1: Power supply schemes*. Changed PC14-OSC_IN into PC14-OSC32_IN in *Figure 9: STM32L052x6/8 UFQFPN32 pinout*. Updated V_{DD_USB} and note *2.* in *Table 25: General operating conditions*. Updated t_{AF} maximum value for range 1 in *Table 72: I2C analog filter characteristics*. Updated *Figure 60: UFQFPN32 - 32-pin, 5x5 mm, 0.5 mm pitch ultra thin fine pitch quad flat package outline* and added note related to exposed pad; updated *Table 90: UFQFPN32 - 32-pin, 5x5 mm, 0.5 mm pitch ultra thin fine pitch quad flat package mechanical data*. Updated *Figure 42: TFBGA64 – 64-ball, 5 x 5 mm, 0.5 mm pitch thin profile fine pitch ball grid array package outline*, *Figure 43: TFBGA64 – 64-ball, 5 x 5 mm, 0.5 mm pitch, thin profile fine pitch ball ,grid array recommended footprint* and *Figure 82: TFBGA64 recommended PCB design rules (0.5 mm pitch BGA)*. Updated paragraph introducing all package marking schematics to add the new sentence “The printed markings may differ depending on the supply chain”. Added UFQFPN48 and Thin WLCSP36 marking examples.
08-Feb-2021	10	Added indication that patents apply to the devices in *Features*. Updated number of SPI/I2S interfaces for STM32L052C6 and STM32L052R6 in *Table 2: Ultra-low-power STM32L052x6/x8 device features and peripheral counts*. Added reference to AN4899 in *Section 6.3.13: I/O port characteristics*. Added $t_{WUUSART}$ and $t_{WULPUART\ in}$ *Table 41: Low-power mode wakeup timings*. Removed R_{10K} and R_{400K} from *Table 69: Comparator 1 characteristics*.

IMPORTANT NOTICE – PLEASE READ CAREFULLY

STMicroelectronics NV and its subsidiaries (“ST”) reserve the right to make changes, corrections, enhancements, modifications, and improvements to ST products and/or to this document at any time without notice. Purchasers should obtain the latest relevant information on ST products before placing orders. ST products are sold pursuant to ST’s terms and conditions of sale in place at the time of order acknowledgement.

Purchasers are solely responsible for the choice, selection, and use of ST products and ST assumes no liability for application assistance or the design of Purchasers’ products.

No license, express or implied, to any intellectual property right is granted by ST herein.

Resale of ST products with provisions different from the information set forth herein shall void any warranty granted by ST for such product.

ST and the ST logo are trademarks of ST. For additional information about ST trademarks, please refer to *www.st.com/trademarks*. All other product or service names are the property of their respective owners.

Information in this document supersedes and replaces information previously supplied in any prior versions of this document.

© 2021 STMicroelectronics – All rights reserved