STM32L053C6 STM32L053C8 STM32L053R6 STM32L053R8

Ultra-low-power 32-bit MCU Arm®-based Cortex®-M0+, up to 64KB Flash, 8KB SRAM, 2KB EEPROM, LCD, USB, ADC, DAC

Datasheet - production data

Features

Includes ST state-of-the-art patented technology

- Ultra-low-power platform
  - 1.65 V to 3.6 V power supply
  - -40 to 125 °C temperature range
  - 0.27 µA Standby mode (2 wake-up pins)
  - 0.4 µA Stop mode (16 wake-up lines)
  - 0.8 µA Stop mode + RTC + 8-Kbyte RAM retention
  - 88 µA/MHz in Run mode
  - 3.5 µs wake-up time (from RAM)
  - 5 µs wake-up time (from flash memory)
- Core: Arm® 32-bit Cortex®-M0+ with MPU
  - From 32 kHz up to 32 MHz max.
  - 0.95 DMIPS/MHz
- Memories
  - Up to 64-Kbyte flash memory with ECC
  - 8-Kbyte RAM
  - 2 Kbytes of data EEPROM with ECC
  - 20-byte backup register
  - Sector protection against R/W operation
- Up to 51 fast I/Os (45 I/Os 5V tolerant)
- Reset and supply management
  - Ultra-safe, low-power BOR (brownout reset) with 5 selectable thresholds
  - Ultra-low-power POR/PDR
  - Programmable voltage detector (PVD)
- Clock sources
  - 1 to 25 MHz crystal oscillator
  - 32 kHz oscillator for RTC with calibration
  - High speed internal 16 MHz factory-trimmed RC (+/- 1%)
  - Internal low-power 37 kHz RC
  - Internal multispeed low-power 65 kHz to 4.2 MHz RC
  - PLL for CPU clock
- Preprogrammed bootloader
  - USART, SPI supported
- Development support
  - Serial wire debug supported

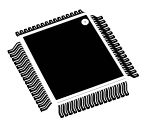

LQFP64 10x10 mm
LQFP48 7x7 mm



UFQFPN48
(7x7 mm)

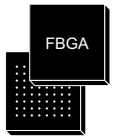

TFBGA64 5x5 mm

- LCD driver for up to 8×28 segments
  - Support contrast adjustment
  - Support blinking mode
  - Step-up converted on board
- Rich Analog peripherals
  - 12-bit ADC 1.14 Msps up to 16 channels (down to 1.65 V)
  - 12-bit 1 channel DAC with output buffers (down to 1.8 V)
  - 2x ultra-low-power comparators (window mode and wake up capability, down to 1.65 V)
- Up to 24 capacitive sensing channels supporting touchkey, linear and rotary touch sensors
- 7-channel DMA controller, supporting ADC, SPI, I2C, USART, DAC, Timers
- 8x peripheral communication interfaces
  - 1x USB 2.0 crystal-less, battery charging detection and LPM
  - 3x USART/LPUART (SPI, ISO 7816, IrDA)
  - Up to 4x SPI 16 Mbits/s (+ 2 with USART)
  - 2x I2C (SMBus/PMBus)
- 9x timers: 1x 16-bit with up to 4 channels, 2x 16-bit with up to 2 channels, 1x 16-bit ultra-low-power timer, 1x SysTick, 1x RTC, 1x 16-bit basic for DAC, 2x watchdogs (independent/window)

Product label



This is information on a product in full production. www.st.com

- CRC calculation unit, 96-bit unique ID
- True RNG and firewall protection
- All packages are ECOPACK2

Contents

1 Introduction 10

2 Description 11

2.1 Device overview 12

2.2 Ultra-low-power device continuum 14

3 Functional overview 15

3.1 Low-power modes 15

3.2 Interconnect matrix 20

3.3 Arm® Cortex®-M0+ core with MPU 21

3.4 Reset and supply management 22

3.4.1 Power supply schemes 22

3.4.2 Power supply supervisor 22

3.4.3 Voltage regulator 23

3.5 Clock management 23

3.6 Low-power real-time clock and backup registers 26

3.7 General-purpose inputs/outputs (GPIOs) 26

3.8 Memories 27

3.9 Boot modes 27

3.10 Direct memory access (DMA) 28

3.11 Liquid crystal display (LCD) 28

3.12 Analog-to-digital converter (ADC) 28

3.13 Temperature sensor 29

3.13.1 Internal voltage reference (V_{REFINT}) 29

3.13.2 V_{LCD} voltage monitoring 30

3.14 Digital-to-analog converter (DAC) 30

3.15 Ultra-low-power comparators and reference voltage 30

3.16 System configuration controller 31

3.17 Touch sensing controller (TSC) 31

3.18 Timers and watchdogs 32

3.18.1 General-purpose timers (TIM2, TIM21 and TIM22) 32

3.18.2 Low-power Timer (LPTIM) 33

3.18.3 Basic timer (TIM6) . . . 33
3.18.4 SysTick timer . . . 33
3.18.5 Independent watchdog (IWDG) . . . 33
3.18.6 Window watchdog (WWDG) . . . 34
3.19 Communication interfaces . . . 34
3.19.1 I2C bus . . . 34
3.19.2 Universal synchronous/asynchronous receiver transmitter (USART) . . . 35
3.19.3 Low-power universal asynchronous receiver transmitter (LPUART) . . . 35
3.19.4 Serial peripheral interface (SPI)/Inter-integrated sound (I2S) . . . 36
3.19.5 Universal serial bus (USB) . . . 36
3.20 Clock recovery system (CRS) . . . 37
3.21 Cyclic redundancy check (CRC) calculation unit . . . 37
3.22 Serial wire debug port (SW-DP) . . . 37

4 Pin descriptions . . . 38

5 Memory mapping . . . 51

6 Electrical characteristics . . . 52
6.1 Parameter conditions . . . 52
6.1.1 Minimum and maximum values . . . 52
6.1.2 Typical values . . . 52
6.1.3 Typical curves . . . 52
6.1.4 Loading capacitor . . . 52
6.1.5 Pin input voltage . . . 52
6.1.6 Power supply scheme . . . 53
6.1.7 Optional LCD power supply scheme . . . 54
6.1.8 Current consumption measurement . . . 54
6.2 Absolute maximum ratings . . . 55
6.3 Operating conditions . . . 57
6.3.1 General operating conditions . . . 57
6.3.2 Embedded reset and power control block characteristics . . . 59
6.3.3 Embedded internal reference voltage . . . 60
6.3.4 Supply current characteristics . . . 61
6.3.5 Wake-up time from low-power mode . . . 72
6.3.6 External clock source characteristics . . . 74
6.3.7 Internal clock source characteristics . . . 78

6.3.8 PLL characteristics 81
6.3.9 Memory characteristics 82
6.3.10 EMC characteristics 83
6.3.11 Electrical sensitivity characteristics 85
6.3.12 I/O current injection characteristics 86
6.3.13 I/O port characteristics 87
6.3.14 NRST pin characteristics 91
6.3.15 12-bit ADC characteristics 92
6.3.16 DAC electrical characteristics 98
6.3.17 Temperature sensor characteristics 101
6.3.18 Comparators 101
6.3.19 Timer characteristics 103
6.3.20 Communications interfaces 103
6.3.21 LCD controller 113

7 Package information 115
7.1 Device marking 115
7.2 LQFP64 package information (5W) 116
7.3 TFBGA64 package information (R8) 120
7.4 LQFP48 package information (5B) 123
7.5 UFQFPN48 package information (A0B9) 127
7.6 Thermal characteristics 130
7.6.1 Reference document 131

8 Ordering information 132

9 Important security notice 133

10 Revision history 134

List of tables

Table 1. Ultra-low-power STM32L053x6/x8 device features and peripheral counts . . . 12
Table 2. Functionalities depending on the operating power supply range . . . 17
Table 3. CPU frequency range depending on dynamic voltage scaling . . . 17
Table 4. Functionalities depending on the working mode (from Run/active down to standby) . . . 18
Table 5. STM32L053x6/8 peripherals interconnect matrix . . . 20
Table 6. Temperature sensor calibration values . . . 29
Table 7. Internal voltage reference measured values . . . 29
Table 8. Capacitive sensing GPIOs available on STM32L053x6/8 devices . . . 31
Table 9. Timer feature comparison . . . 32
Table 10. Comparison of I2C analog and digital filters . . . 34
Table 11. STM32L053x6/8 I^2C implementation . . . 34
Table 12. USART implementation . . . 35
Table 13. SPI/I2S implementation . . . 36
Table 14. Legend/abbreviations used in the pinout table . . . 41
Table 15. STM32L053x6/8 pin definitions . . . 41
Table 16. Alternate function port A . . . 47
Table 17. Alternate function port B . . . 48
Table 18. Alternate function port C . . . 49
Table 19. Alternate function port D . . . 49
Table 20. Alternate function port H . . . 50
Table 21. Voltage characteristics . . . 55
Table 22. Current characteristics . . . 56
Table 23. Thermal characteristics . . . 56
Table 24. General operating conditions . . . 57
Table 25. Embedded reset and power control block characteristics . . . 59
Table 26. Embedded internal reference voltage calibration values . . . 60
Table 27. Embedded internal reference voltage . . . 60
Table 28. Current consumption in Run mode, code with data processing running from flash . . . 62
Table 29. Current consumption in Run mode vs code type, code with data processing running from flash . . . 62
Table 30. Current consumption in Run mode, code with data processing running from RAM . . . 64
Table 31. Current consumption in Run mode vs code type, code with data processing running from RAM . . . 64
Table 32. Current consumption in Sleep mode . . . 65
Table 33. Current consumption in Low-power run mode . . . 66
Table 34. Current consumption in Low-power sleep mode . . . 67
Table 35. Typical and maximum current consumptions in Stop mode . . . 68
Table 36. Typical and maximum current consumptions in Standby mode . . . 69
Table 37. Average current consumption during wake-up . . . 69
Table 38. Peripheral current consumption in Run or Sleep mode . . . 70
Table 39. Peripheral current consumption in Stop and Standby mode . . . 72
Table 40. Low-power mode wake-up timings . . . 73
Table 41. High-speed external user clock characteristics . . . 74
Table 42. Low-speed external user clock characteristics . . . 75
Table 43. HSE oscillator characteristics . . . 76
Table 44. LSE oscillator characteristics . . . 77
Table 45. 16 MHz HSI16 oscillator characteristics . . . 78

Table 46. HSI48 oscillator characteristics . . . 79
Table 47. LSI oscillator characteristics . . . 79
Table 48. MSI oscillator characteristics . . . 79
Table 49. PLL characteristics . . . 81
Table 50. RAM and hardware registers . . . 82
Table 51. Flash memory and data EEPROM characteristics . . . 82
Table 52. Flash memory and data EEPROM endurance and retention . . . 82
Table 53. EMS characteristics . . . 83
Table 54. EMI characteristics . . . 84
Table 55. ESD absolute maximum ratings . . . 85
Table 56. Electrical sensitivities . . . 85
Table 57. I/O current injection susceptibility . . . 86
Table 58. I/O static characteristics . . . 87
Table 59. Output voltage characteristics . . . 89
Table 60. I/O AC characteristics . . . 90
Table 61. NRST pin characteristics . . . 91
Table 62. ADC characteristics . . . 92
Table 63. R_{AIN} max for f_{ADC} = 16 MHz . . . 94
Table 64. ADC accuracy . . . 94
Table 65. DAC characteristics . . . 98
Table 66. Temperature sensor calibration values . . . 101
Table 67. Temperature sensor characteristics . . . 101
Table 68. Comparator 1 characteristics . . . 101
Table 69. Comparator 2 characteristics . . . 102
Table 70. TIMx characteristics . . . 103
Table 71. I2C analog filter characteristics . . . 104
Table 72. SPI characteristics in voltage Range 1 . . . 104
Table 73. SPI characteristics in voltage Range 2 . . . 106
Table 74. SPI characteristics in voltage Range 3 . . . 107
Table 75. I2S characteristics . . . 110
Table 76. USB startup time . . . 112
Table 77. USB DC electrical characteristics . . . 112
Table 78. USB: full speed electrical characteristics . . . 113
Table 79. LCD controller characteristics . . . 113
Table 80. LQFP64 - Mechanical data . . . 117
Table 81. TFBGA64 – 64-ball, 5 x 5 mm, 0.5 mm pitch thin profile fine pitch ball grid array package outline . . . 120
Table 82. TFBGA64 recommended PCB design rules (0.5 mm pitch BGA) . . . 121
Table 83. LQFP48 – Mechanical data . . . 124
Table 84. UFQFPN48 – Mechanical data . . . 128
Table 85. Thermal characteristics . . . 130
Table 86. Document revision history . . . 134

List of figures

Figure 1. STM32L053x6/8 block diagram . . . 13
Figure 2. Clock tree . . . 25
Figure 3. STM32L053x6/8 LQFP64 pinout . . . 38
Figure 4. STM32L053x6/8 TFBGA64 ballout . . . 39
Figure 5. STM32L053x6/8 LQFP48 pinout . . . 40
Figure 6. STM32L053x6/8 UFQFPN48 pinout . . . 40
Figure 7. Pin loading conditions . . . 52
Figure 8. Pin input voltage . . . 52
Figure 9. Power supply scheme . . . 53
Figure 10. Optional LCD power supply scheme . . . 54
Figure 11. Current consumption measurement scheme . . . 54
Figure 12. IDD vs VDD, at TA= 25/55/85/105 °C, Run mode, code running from flash memory, Range 2, HSE, 1WS . . . 63
Figure 13. IDD vs VDD, at TA= 25/55/85/105 °C, Run mode, code running from flash memory, Range 2, HSI16, 1WS . . . 63
Figure 14. IDD vs VDD, at TA= 25/55/ 85/105/125 °C, Low-power run mode, code running from RAM, Range 3, MSI (Range 0) at 64 KHz, 0 WS . . . 67
Figure 15. IDD vs VDD, at TA= 25/55/ 85/105/125 °C, Stop mode with RTC enabled and running on LSE Low drive . . . 68
Figure 16. IDD vs VDD, at TA= 25/55/85/105/125 °C, Stop mode with RTC disabled, all clocks OFF . . . 68
Figure 17. High-speed external clock source AC timing diagram . . . 74
Figure 18. Low-speed external clock source AC timing diagram . . . 75
Figure 19. HSE oscillator circuit diagram . . . 76
Figure 20. Typical application with a 32.768 kHz crystal . . . 77
Figure 21. HSI16 minimum and maximum value versus temperature . . . 78
Figure 22. VIH/VIL versus VDD (CMOS I/Os) . . . 88
Figure 23. VIH/VIL versus VDD (TTL I/Os) . . . 88
Figure 24. I/O AC characteristics definition . . . 91
Figure 25. Recommended NRST pin protection . . . 92
Figure 26. ADC accuracy characteristics . . . 95
Figure 27. Typical connection diagram using the ADC . . . 96
Figure 28. Power supply and reference decoupling (V_{REF+} not connected to V_{DDA}) . . . 96
Figure 29. Power supply and reference decoupling (V_{REF+} connected to V_{DDA}) . . . 97
Figure 30. 12-bit buffered/non-buffered DAC . . . 100
Figure 31. SPI timing diagram - slave mode and CPHA = 0 . . . 108
Figure 32. SPI timing diagram - slave mode and CPHA = 1 . . . 108
Figure 33. SPI timing diagram - master mode . . . 109
Figure 34. I^2S slave timing diagram (Philips protocol)(1) . . . 111
Figure 35. I^2S master timing diagram (Philips protocol)(1) . . . 111
Figure 36. USB timings: definition of data signal rise and fall time . . . 112
Figure 37. LQFP64 - Outline(15) . . . 116
Figure 38. LQFP64 - Recommended footprint . . . 118
Figure 39. LQFP64 marking example (package top view) . . . 119
Figure 40. TFBGA64 – 64-ball, 5 x 5 mm, 0.5 mm pitch thin profile fine pitch ball grid array package outline . . . 120
Figure 41. TFBGA64 – 64-ball, 5 x 5 mm, 0.5 mm pitch, thin profile fine pitch ball ,grid array recommended footprint . . . 121

Figure 42. TFBGA64 marking example (package top view) 122
Figure 43. LQFP48 – Outline(15) 123
Figure 44. LQFP48 – Recommended footprint 125
Figure 45. LQFP48 marking example (package top view) 126
Figure 46. UFQFPN48 – Outline 127
Figure 47. UFQFPN48 – Footprint example 128
Figure 48. UFQFPN48 marking example (package top view) 129
Figure 49. Thermal resistance 130

1 Introduction

The ultra-low-power STM32L053x6/8 are offered in 4 different package types: from 48 pins to 64 pins. Depending on the device chosen, different sets of peripherals are included, the description below gives an overview of the complete range of peripherals proposed in this family.

These features make the ultra-low-power STM32L053x6/8 microcontrollers suitable for a wide range of applications:

- Gas/water meters and industrial sensors
- Healthcare and fitness equipment
- Remote control and user interface
- PC peripherals, gaming, GPS equipment
- Alarm system, wired and wireless sensors, video intercom

This STM32L053x6/8 datasheet should be read in conjunction with the STM32L0x3xx reference manual (RM0367).

For information on the device errata with respect to the datasheet and reference manual, refer to the STM32L053x6/8 errata sheet (ES0251), available on the STMicroelectronics website *www.st.com*.

For information on the Arm®(a) Cortex®-M0+ core please refer to the Cortex®-M0+ Technical Reference Manual, available from the www.arm.com website.

Figure 1 shows the general block diagram of the device family.

a. Arm is a registered trademark of Arm Limited (or its subsidiaries) in the US and/or elsewhere.

2 Description

The ultra-low-power STM32L053x6/8 microcontrollers incorporate the connectivity power of the universal serial bus (USB 2.0 crystal-less) with the high-performance Arm Cortex-M0+ 32-bit RISC core operating at a 32 MHz frequency, a memory protection unit (MPU), high-speed embedded memories (up to 64 Kbytes of flash program memory, 2 Kbytes of data EEPROM and 8 Kbytes of RAM) plus an extensive range of enhanced I/Os and peripherals.

The STM32L053x6/8 devices provide high power efficiency for a wide range of performance. It is achieved with a large choice of internal and external clock sources, an internal voltage adaptation and several low-power modes.

The STM32L053x6/8 devices offer several analog features, one 12-bit ADC with hardware oversampling, one DAC, two ultra-low-power comparators, several timers, one low-power timer (LPTIM), three general-purpose 16-bit timers and one basic timer, one RTC and one SysTick which can be used as timebases. They also feature two watchdogs, one watchdog with independent clock and window capability and one window watchdog based on bus clock.

Moreover, the STM32L053x6/8 devices embed standard and advanced communication interfaces: up to two I2C, two SPIs, one I2S, two USARTs, a low-power UART (LPUART), and a crystal-less USB. The devices offer up to 24 capacitive sensing channels to simply add touch sensing functionality to any application.

The STM32L053x6/8 also include a real-time clock and a set of backup registers that remain powered in Standby mode.

Finally, their integrated LCD controller has a built-in LCD voltage generator that allows to drive up to 8 multiplexed LCDs with contrast independent of the supply voltage.

The ultra-low-power STM32L053x6/8 devices operate from a 1.8 to 3.6 V power supply (down to 1.65 V at power down) with BOR and from a 1.65 to 3.6 V power supply without BOR option. They are available in the -40 to +125 °C temperature range. A comprehensive set of power-saving modes allows the design of low-power applications.

2.1 Device overview

Table 1. Ultra-low-power STM32L053x6/x8 device features and peripheral counts

Peripheral		STM32L053C6	STM32L053R6	STM32L053C8	STM32L053R8
Flash (Kbytes)		32		64	
Data EEPROM (Kbytes)		2		2	
RAM (Kbytes)		8		8	
Timers	General-purpose	3		3	
	Basic	1		1	
	LPTIMER	1		1	
RTC/SYSTICK/IWDG/WWDG		1/1/1/1		1/1/1/1	
Communication interfaces	SPI/I2S	4(2)[1]/1		4(2)[1]/1	
	I^2C	2		2	
	USART	2		2	
	LPUART	1		1	
	USB/(VDD_USB)	1/(1)		1/(1)	
GPIOs		37	51[2]	37	51[2]
Clocks: HSE/LSE/HSI/MSI/LSI		1/1/1/1/1		1/1/1/1/1	
12-bit synchronized ADC Number of channels		1 10	1 16[2]	1 10	1 16[2]
12-bit DAC Number of channels		1 1		1 1	
LCD COM x SEG		1 4x18	1 4x32 or 8x28[2]	1 4x18	1 4x32 or 8x28[2]
Comparators		2		2	
Capacitive sensing channels		17	24[2]	17	24[2]
Max. CPU frequency		32 MHz			
Operating voltage		1.8 V to 3.6 V (down to 1.65 V at power-down) with BOR option 1.65 V to 3.6 V without BOR option			
Operating temperatures		Ambient temperature: –40 to +125 °C Junction temperature: –40 to +130 °C			
Packages		LQFP48, UFQFPN48	LQFP64, TFBGA64	LQFP48, UFQFPN48	LQFP64, TFBGA64

1. 2 SPI interfaces are USARTs operating in SPI master mode.
2. TFBGA64 has one GPIO, one LCD COM x SEG, one ADC input and one capacitive sensing channel less than LQFP64.

Figure 1. STM32L053x6/8 block diagram

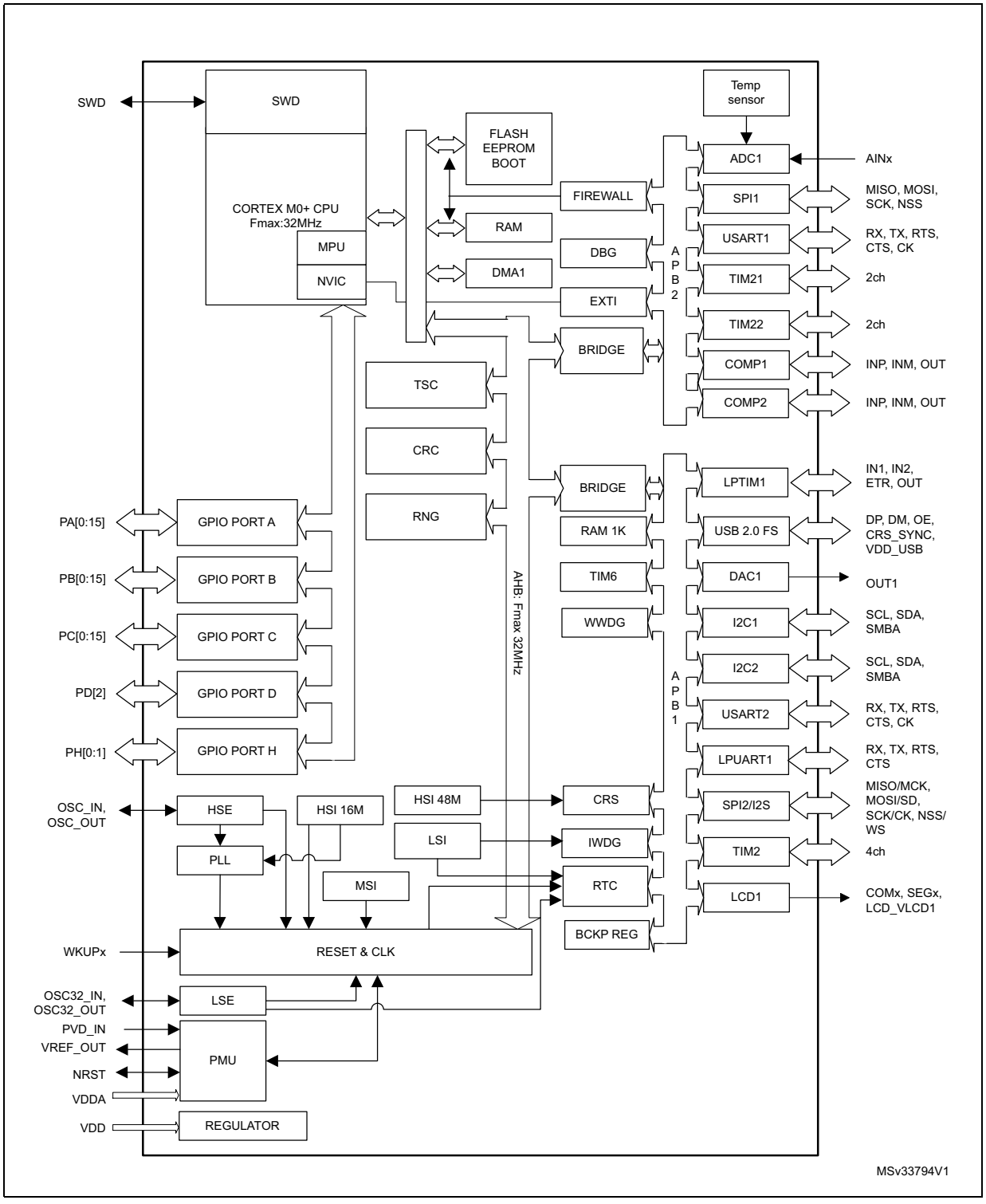

2.2 Ultra-low-power device continuum

The ultra-low-power family offers a large choice of core and features, from 8-bit proprietary core up to Arm® Cortex®-M4, including Arm® Cortex®-M3 and Arm® Cortex®-M0+. The STM32Lx series are the best choice to answer your needs in terms of ultra-low-power features. The STM32 ultra-low-power series are the best solution for applications such as gaz/water meter, keyboard/mouse or fitness and healthcare application. Several built-in features like LCD drivers, dual-bank memory, low-power run mode, operational amplifiers, 128-bit AES, DAC, crystal-less USB and many other definitely help you building a highly cost optimized application by reducing BOM cost. STMicroelectronics, as a reliable and long-term manufacturer, ensures as much as possible pin-to-pin compatibility between all STM8Lx and STM32Lx on one hand, and between all STM32Lx and STM32Fx on the other hand. Thanks to this unprecedented scalability, your legacy application can be upgraded to respond to the latest market feature and efficiency requirements.

3 Functional overview

3.1 Low-power modes

The ultra-low-power STM32L053x6/8 support dynamic voltage scaling to optimize its power consumption in Run mode. The voltage from the internal low-drop regulator that supplies the logic can be adjusted according to the system's maximum operating frequency and the external voltage supply.

There are three power consumption ranges:

- Range 1 (V_{DD} range limited to 1.71-3.6 V), with the CPU running at up to 32 MHz
- Range 2 (full V_{DD} range), with a maximum CPU frequency of 16 MHz
- Range 3 (full V_{DD} range), with a maximum CPU frequency limited to 4.2 MHz

Seven low-power modes are provided to achieve the best compromise between low-power consumption, short startup time and available wake-up sources:

- **Sleep mode**

  In Sleep mode, only the CPU is stopped. All peripherals continue to operate and can wake up the CPU when an interrupt/event occurs. Sleep mode power consumption at 16 MHz is about 1 mA with all peripherals off.

- **Low-power run mode**

  This mode is achieved with the multispeed internal (MSI) RC oscillator set to the low-speed clock (max 131 kHz), execution from SRAM or flash memory, and internal regulator in low-power mode to minimize the regulator's operating current. In Low-power run mode, the clock frequency and the number of enabled peripherals are both limited.

- **Low-power sleep mode**

  This mode is achieved by entering Sleep mode with the internal voltage regulator in low-power mode to minimize the regulator's operating current. In Low-power sleep mode, both the clock frequency and the number of enabled peripherals are limited; a typical example would be to have a timer running at 32 kHz.

  When wake-up is triggered by an event or an interrupt, the system reverts to the Run mode with the regulator on.

  Stop mode with RTC

  The Stop mode achieves the lowest power consumption while retaining the RAM and register contents and real time clock. All clocks in the V_{CORE} domain are stopped, the PLL, MSI RC, HSE crystal and HSI RC oscillators are disabled. The LSE or LSI is still running. The voltage regulator is in the low-power mode.

  Some peripherals featuring wake-up capability can enable the HSI RC during Stop mode to detect their wake-up condition.

  The device can be woken up from Stop mode by any of the EXTI line, in 3.5 µs, the processor can serve the interrupt or resume the code. The EXTI line source can be any GPIO. It can be the PVD output, the comparator 1 event or comparator 2 event (if internal reference voltage is on), it can be the RTC alarm/tamper/timestamp/wake-up events, the USB/USART/I2C/LPUART/LPTIMER wake-up events.

- **Stop mode without RTC**

  The Stop mode achieves the lowest power consumption while retaining the RAM and register contents. All clocks are stopped, the PLL, MSI RC, HSI and LSI RC, HSE and LSE crystal oscillators are disabled.

  Some peripherals featuring wake-up capability can enable the HSI RC during Stop mode to detect their wake-up condition.

  The voltage regulator is in the low-power mode. The device can be woken up from Stop mode by any of the EXTI line, in 3.5 µs, the processor can serve the interrupt or resume the code. The EXTI line source can be any GPIO. It can be the PVD output, the comparator 1 event or comparator 2 event (if internal reference voltage is on). It can also be wakened by the USB/USART/I2C/LPUART/LPTIMER wake-up events.

- **Standby mode with RTC**

  The Standby mode is used to achieve the lowest power consumption and real time clock. The internal voltage regulator is switched off so that the entire V_{CORE} domain is powered off. The PLL, MSI RC, HSE crystal and HSI RC oscillators are also switched off. The LSE or LSI is still running. After entering Standby mode, the RAM and register contents are lost except for registers in the Standby circuitry (wake-up logic, IWDG, RTC, LSI, LSE Crystal 32 KHz oscillator, RCC_CSR register).

  The device exits Standby mode in 60 µs when an external reset (NRST pin), an IWDG reset, a rising edge on one of the three WKUP pins, RTC alarm (Alarm A or Alarm B), RTC tamper event, RTC timestamp event or RTC Wake-up event occurs.

- **Standby mode without RTC**

  The Standby mode is used to achieve the lowest power consumption. The internal voltage regulator is switched off so that the entire V_{CORE} domain is powered off. The PLL, MSI RC, HSI and LSI RC, HSE and LSE crystal oscillators are also switched off. After entering Standby mode, the RAM and register contents are lost except for registers in the Standby circuitry (wake-up logic, IWDG, RTC, LSI, LSE Crystal 32 KHz oscillator, RCC_CSR register).

  The device exits Standby mode in 60 µs when an external reset (NRST pin) or a rising edge on one of the three WKUP pin occurs.

Note: The RTC, the IWDG, and the corresponding clock sources are not stopped automatically by entering Stop or Standby mode.The LCD is not stopped automatically by entering Stop mode.

Table 2. Functionalities depending on the operating power supply range

Operating power supply range(1)	Functionalities depending on the operating power supply range		
	DAC and ADC operation	Dynamic voltage scaling range	USB
V_{DD} = 1.65 to 1.71 V	ADC only, conversion time up to 570 ksps	Range 2 or range 3	Not functional
V_{DD} = 1.71 to 1.8 V(2)	ADC only, conversion time up to 1.14 Msps	Range 1, range 2 or range 3	Functional(3)
V_{DD} = 1.8 to 2.0 V(2)	Conversion time up to 1.14 Msps	Range1, range 2 or range 3	Functional(3)
V_{DD} = 2.0 to 2.4 V	Conversion time up to 1.14 Msps	Range 1, range 2 or range 3	Functional(3)
V_{DD} = 2.4 to 3.6 V	Conversion time up to 1.14 Msps	Range 1, range 2 or range 3	Functional(3)

1. GPIO speed depends on V_{DD} voltage range. Refer to *Table 60: I/O AC characteristics* for more information about I/O speed.
2. CPU frequency changes from initial to final must respect "fcpu initial <4*fcpu final". It must also respect 5 µs delay between two changes. For example to switch from 4.2 MHz to 32 MHz, you can switch from 4.2 MHz to 16 MHz, wait 5 µs, then switch from 16 MHz to 32 MHz.
3. To be USB compliant from the I/O voltage standpoint, the minimum V_{DD_USB} is 3.0 V.

Table 3. CPU frequency range depending on dynamic voltage scaling

CPU frequency range	Dynamic voltage scaling range
16 MHz to 32 MHz (1ws) 32 kHz to 16 MHz (0ws)	Range 1
8 MHz to 16 MHz (1ws) 32 kHz to 8 MHz (0ws)	Range 2
32 kHz to 4.2 MHz (0ws)	Range 3

Table 4. Functionalities depending on the working mode (from Run/active down to standby) (1)

IPs	Run/Active	Sleep	Low-power run	Low-power sleep	Stop		Standby	
						Wake-up capability		Wake-up capability
CPU	Y	--	Y	--	--		--	
Flash memory	O	O	O	O	--		--	
RAM	Y	Y	Y	Y	Y		--	
Backup registers	Y	Y	Y	Y	Y		Y	
EEPROM	O	O	O	O	--		--	
Brown-out reset (BOR)	O	O	O	O	O	O	O	O
DMA	O	O	O	O	--		--	
Programmable Voltage Detector (PVD)	O	O	O	O	O	O	-	
Power-on/down reset (POR/PDR)	Y	Y	Y	Y	Y	Y	Y	Y
High Speed Internal (HSI)	O	O	--	--	(2)		--	
High Speed External (HSE)	O	O	O	O	--		--	
Low Speed Internal (LSI)	O	O	O	O	O		O	
Low Speed External (LSE)	O	O	O	O	O		O	
Multi-Speed Internal (MSI)	O	O	Y	Y	--		--	
Inter-Connect Controller	Y	Y	Y	Y	Y		--	
RTC	O	O	O	O	O	O	O	
RTC Tamper	O	O	O	O	O	O	O	O
Auto wake-up (AWU)	O	O	O	O	O	O	O	O
LCD	O	O	O	O	O		--	
USB	O	O	--	--	--	O	--	
USART	O	O	O	O	O(3)	O	--	
LPUART	O	O	O	O	O(3)	O	--	
SPI	O	O	O	O	--		--	
I2C	O	O	--	--	O(4)	O	--	
ADC	O	O	--	--	--		--	

Table 4. Functionalities depending on the working mode (from Run/active down to standby) (continued)(1)

IPs	Run/Active	Sleep	Low-power run	Low-power sleep	Stop		Standby	
						Wake-up capability		Wake-up capability
DAC	O	O	O	O	O		--	
Temperature sensor	O	O	O	O	O		--	
Comparators	O	O	O	O	O	O	--	
16-bit timers	O	O	O	O	--		--	
LPTIMER	O	O	O	O	O	O		
IWDG	O	O	O	O	O	O	O	O
WWDG	O	O	O	O	--		--	
Touch sensing controller (TSC)	O	O	--	--	--		--	
SysTick Timer	O	O	O	O			--	
GPIOs	O	O	O	O	O	O		2 pins
Wake-up time to Run mode	0 µs	0.36 µs	3 µs	32 µs	3.5 µs		50 µs	
Consumption V_{DD}=1.8 to 3.6 V (Typ)	Down to 140 µA/MHz (from flash memory)	Down to 37 µA/MHz (from flash memory)	Down to 8 µA	Down to 4.5 µA	0.4 µA (No RTC) V_{DD}=1.8 V		0.28 µA (No RTC) V_{DD}=1.8 V	
					0.8 µA (with RTC) V_{DD}=1.8 V		0.65 µA (with RTC) V_{DD}=1.8 V	
					0.4 µA (No RTC) V_{DD}=3.0 V		0.29 µA (No RTC) V_{DD}=3.0 V	
					1 µA (with RTC) V_{DD}=3.0 V		0.85 µA (with RTC) V_{DD}=3.0 V	

1. Legend:
   "Y" = Yes (enable).
   "O" = Optional can be enabled/disabled by software)
   "-" = Not available

2. Some peripherals with wake-up from Stop capability can request HSI to be enabled. In this case, HSI is woken up by the peripheral, and only feeds the peripheral which requested it. HSI is automatically put off when the peripheral does not need it anymore.

3. UART and LPUART reception is functional in Stop mode. It generates a wake-up interrupt on Start. To generate a wake-up on address match or received frame event, the LPUART can run on LSE clock while the UART has to wake up or keep running the HSI clock.

4. I2C address detection is functional in Stop mode. It generates a wake-up interrupt in case of address match. It will wake up the HSI during reception.

3.2 Interconnect matrix

Several peripherals are directly interconnected. This allows autonomous communication between peripherals, thus saving CPU resources and power consumption. In addition, these hardware connections allow fast and predictable latency.

Depending on peripherals, these interconnections can operate in Run, Sleep, Low-power run, Low-power sleep and Stop modes.

Table 5. STM32L053x6/8 peripherals interconnect matrix

Interconnect source	Interconnect destination	Interconnect action	Run	Sleep	Low-power run	Low-power sleep	Stop
COMPx	TIM2,TIM21, TIM22	Timer input channel, trigger from analog signals comparison	Y	Y	Y	Y	-
	LPTIM	Timer input channel, trigger from analog signals comparison	Y	Y	Y	Y	Y
TIMx	TIMx	Timer triggered by other timer	Y	Y	Y	Y	-
RTC	TIM21	Timer triggered by Auto wake-up	Y	Y	Y	Y	-
	LPTIM	Timer triggered by RTC event	Y	Y	Y	Y	Y
All clock source	TIMx	Clock source used as input channel for RC measurement and trimming	Y	Y	Y	Y	-
USB	CRS/HSI48	the clock recovery system trims the HSI48 based on USB SOF	Y	Y	-	-	-
GPIO	TIMx	Timer input channel and trigger	Y	Y	Y	Y	-
	LPTIM	Timer input channel and trigger	Y	Y	Y	Y	Y
	ADC,DAC	Conversion trigger	Y	Y	Y	Y	-

3.3 Arm® Cortex®-M0+ core with MPU

The Cortex-M0+ processor is an entry-level 32-bit Arm Cortex processor designed for a broad range of embedded applications. It offers significant benefits to developers, including:

- a simple architecture that is easy to learn and program
- ultra-low power, energy-efficient operation
- excellent code density
- deterministic, high-performance interrupt handling
- upward compatibility with Cortex-M processor family
- platform security robustness, with integrated Memory Protection Unit (MPU).

The Cortex-M0+ processor is built on a highly area and power optimized 32-bit processor core, with a 2-stage pipeline Von Neumann architecture. The processor delivers exceptional energy efficiency through a small but powerful instruction set and extensively optimized design, providing high-end processing hardware including a single-cycle multiplier.

The Cortex-M0+ processor provides the exceptional performance expected of a modern 32-bit architecture, with a higher code density than other 8-bit and 16-bit microcontrollers.

Owing to its embedded Arm core, the STM32L053x6/8 are compatible with all Arm tools and software.

Nested vectored interrupt controller (NVIC)

The ultra-low-power STM32L053x6/8 embed a nested vectored interrupt controller able to handle up to 32 maskable interrupt channels and 4 priority levels.

The Cortex-M0+ processor closely integrates a configurable Nested Vectored Interrupt Controller (NVIC), to deliver industry-leading interrupt performance. The NVIC:

- includes a Non-Maskable Interrupt (NMI)
- provides zero jitter interrupt option
- provides four interrupt priority levels

The tight integration of the processor core and NVIC provides fast execution of Interrupt Service Routines (ISRs), dramatically reducing the interrupt latency. This is achieved through the hardware stacking of registers, and the ability to abandon and restart load-multiple and store-multiple operations. Interrupt handlers do not require any assembler wrapper code, removing any code overhead from the ISRs. Tail-chaining optimization also significantly reduces the overhead when switching from one ISR to another.

To optimize low-power designs, the NVIC integrates with the sleep modes, that include a deep sleep function that enables the entire device to enter rapidly stop or standby mode.

This hardware block provides flexible interrupt management features with minimal interrupt latency.

3.4 Reset and supply management

3.4.1 Power supply schemes

- V_{DD} = 1.65 to 3.6 V: external power supply for I/Os and the internal regulator. Provided externally through V_{DD} pins.
- V_{SSA}, V_{DDA} = 1.65 to 3.6 V: external analog power supplies for ADC, DAC, reset blocks, RCs and PLL (minimum voltage to be applied to V_{DDA} is 1.8 V when the DAC is used). V_{DDA} and V_{SSA} must be connected to V_{DD} and V_{SS}, respectively.
- V_{DD_USB} = 1.65 to 3.6V: external power supply for USB transceiver, USB_DM (PA11) and USB_DP (PA12). To guarantee a correct voltage level for USB communication V_{DD_USB} must be above 3.0V. If USB is not used this pin must be tied to V_{DD} or V_{SS}. On packages without VDD_USB pin, V_{DD_USB} voltage is internally connected to V_{DD} voltage.

3.4.2 Power supply supervisor

The devices have an integrated ZEROPOWER power-on reset (POR)/power-down reset (PDR) that can be coupled with a brownout reset (BOR) circuitry.

Two versions are available:

- The version with BOR activated at power-on operates between 1.8 V and 3.6 V.
- The other version without BOR operates between 1.65 V and 3.6 V.

After the V_{DD} threshold is reached (1.65 V or 1.8 V depending on the BOR which is active or not at power-on), the option byte loading process starts, either to confirm or modify default thresholds, or to disable the BOR permanently: in this case, the VDD min value becomes 1.65 V (whatever the version, BOR active or not, at power-on).

When BOR is active at power-on, it ensures proper operation starting from 1.8 V whatever the power ramp-up phase before it reaches 1.8 V. When BOR is not active at power-up, the power ramp-up should guarantee that 1.65 V is reached on V_{DD} at least 1 ms after it exits the POR area.

Five BOR thresholds are available through option bytes, starting from 1.8 V to 3 V. To reduce the power consumption in Stop mode, it is possible to automatically switch off the internal reference voltage (V_{REFINT}) in Stop mode. The device remains in reset mode when V_{DD} is below a specified threshold, $V_{POR/PDR}$ or V_{BOR}, without the need for any external reset circuit.

Note: The start-up time at power-on is typically 3.3 ms when BOR is active at power-up, the start-up time at power-on can be decreased down to 1 ms typically for devices with BOR inactive at power-up.

The devices feature an embedded programmable voltage detector (PVD) that monitors the $V_{DD/VDDA}$ power supply and compares it to the V_{PVD} threshold. This PVD offers 7 different levels between 1.85 V and 3.05 V, chosen by software, with a step around 200 mV. An interrupt can be generated when $V_{DD/VDDA}$ drops below the V_{PVD} threshold and/or when $V_{DD/VDDA}$ is higher than the V_{PVD} threshold. The interrupt service routine can then generate a warning message and/or put the MCU into a safe state. The PVD is enabled by software.

3.4.3 Voltage regulator

The regulator has three operation modes: main (MR), low power (LPR) and power down.

- MR is used in Run mode (nominal regulation)
- LPR is used in the Low-power run, Low-power sleep and Stop modes
- Power down is used in Standby mode. The regulator output is high impedance, the kernel circuitry is powered down, inducing zero consumption but the contents of the registers and RAM are lost except for the standby circuitry (wake-up logic, IWDG, RTC, LSI, LSE crystal 32 KHz oscillator, RCC_CSR).

3.5 Clock management

The clock controller distributes the clocks coming from different oscillators to the core and the peripherals. It also manages clock gating for low-power modes and ensures clock robustness. It features:

- **Clock prescaler**

  To get the best trade-off between speed and current consumption, the clock frequency to the CPU and peripherals can be adjusted by a programmable prescaler.
- **Safe clock switching**

  Clock sources can be changed safely on the fly in Run mode through a configuration register.
- **Clock management**

  To reduce power consumption, the clock controller can stop the clock to the core, individual peripherals or memory.
- **System clock source**

  Three different clock sources can be used to drive the master clock SYSCLK:
  - 1-25 MHz high-speed external crystal (HSE), that can supply a PLL
  - 16 MHz high-speed internal RC oscillator (HSI), trimmable by software, that can supply a PLLMultispeed internal RC oscillator (MSI), trimmable by software, able to generate 7 frequencies (65 kHz, 131 kHz, 262 kHz, 524 kHz, 1.05 MHz, 2.1 MHz, 4.2 MHz). When a 32.768 kHz clock source is available in the system (LSE), the MSI frequency can be trimmed by software down to a ±0.5% accuracy.
- **Auxiliary clock source**

  Two ultra-low-power clock sources that can be used to drive the LCD controller and the real-time clock:
  - 32.768 kHz low-speed external crystal (LSE)
  - 37 kHz low-speed internal RC (LSI), also used to drive the independent watchdog. The LSI clock can be measured using the high-speed internal RC oscillator for greater precision.
- **RTC and LCD clock sources**

  The LSI, LSE or HSE sources can be chosen to clock the RTC and the LCD, whatever the system clock.
- **USB clock source**

  A 48 MHz clock trimmed through the USB SOF supplies the USB interface.

- **Startup clock**

  After reset, the microcontroller restarts by default with an internal 2 MHz clock (MSI). The prescaler ratio and clock source can be changed by the application program as soon as the code execution starts.

- **Clock security system (CSS)**

  This feature can be enabled by software. If an HSE clock failure occurs, the master clock is automatically switched to HSI and a software interrupt is generated if enabled.

  Another clock security system can be enabled, in case of failure of the LSE it provides an interrupt or wake-up event which is generated if enabled.

- **Clock-out capability (MCO: microcontroller clock output)**

  It outputs one of the internal clocks for external use by the application.

Several prescalers allow the configuration of the AHB frequency, each APB (APB1 and APB2) domains. The maximum frequency of the AHB and the APB domains is 32 MHz. See *Figure 2* for details on the clock tree.

Figure 2. Clock tree

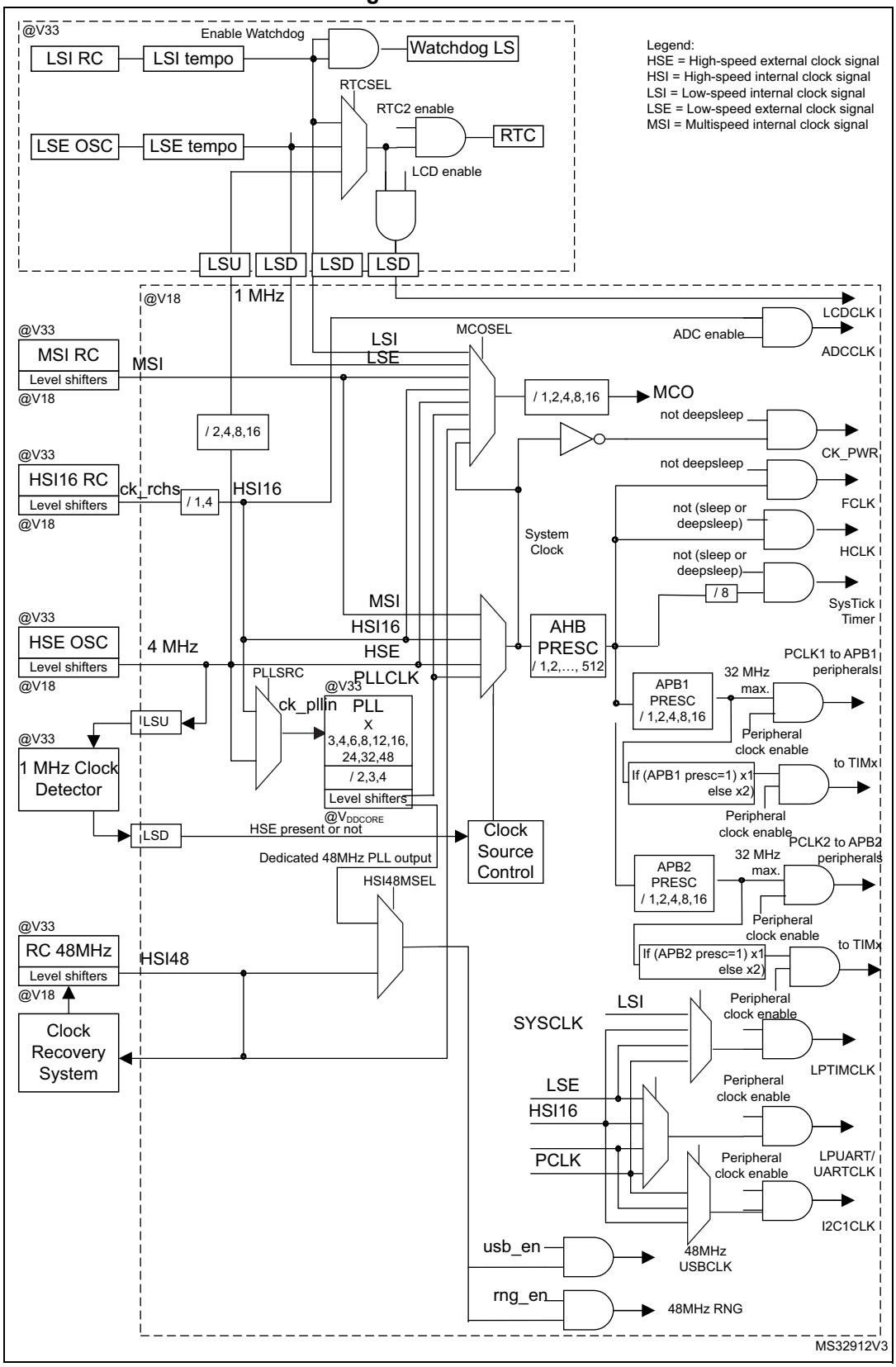

3.6 Low-power real-time clock and backup registers

The real time clock (RTC) and the 5 backup registers are supplied in all modes including standby mode. The backup registers are five 32-bit registers used to store 20 bytes of user application data. They are not reset by a system reset, or when the device wakes up from Standby mode.

The RTC is an independent BCD timer/counter. Its main features are the following:

- Calendar with subsecond, seconds, minutes, hours (12 or 24 format), week day, date, month, year, in BCD (binary-coded decimal) format
- Automatically correction for 28, 29 (leap year), 30, and 31 day of the month
- Two programmable alarms with wake up from Stop and Standby mode capability
- Periodic wake-up from Stop and Standby with programmable resolution and period
- On-the-fly correction from 1 to 32767 RTC clock pulses. This can be used to synchronize it with a master clock.
- Reference clock detection: a more precise second source clock (50 or 60 Hz) can be used to enhance the calendar precision.
- Digital calibration circuit with 1 ppm resolution, to compensate for quartz crystal inaccuracy
- 2 anti-tamper detection pins with programmable filter. The MCU can be woken up from Stop and Standby modes on tamper event detection.
- Timestamp feature which can be used to save the calendar content. This function can be triggered by an event on the timestamp pin, or by a tamper event. The MCU can be woken up from Stop and Standby modes on timestamp event detection.

The RTC clock sources can be:

- A 32.768 kHz external crystal
- A resonator or oscillator
- The internal low-power RC oscillator (typical frequency of 37 kHz)
- The high-speed external clock

3.7 General-purpose inputs/outputs (GPIOs)

Each of the GPIO pins can be configured by software as output (push-pull or open-drain), as input (with or without pull-up or pull-down) or as peripheral alternate function. Most of the GPIO pins are shared with digital or analog alternate functions, and can be individually remapped using dedicated alternate function registers. All GPIOs are high current capable. Each GPIO output, speed can be slowed (40 MHz, 10 MHz, 2 MHz, 400 kHz). The alternate function configuration of I/Os can be locked if needed following a specific sequence in order to avoid spurious writing to the I/O registers. The I/O controller is connected to a dedicated IO bus with a toggling speed of up to 32 MHz.

Extended interrupt/event controller (EXTI)

The extended interrupt/event controller consists of 28 edge detector lines used to generate interrupt/event requests. Each line can be individually configured to select the trigger event (rising edge, falling edge, both) and can be masked independently. A pending register maintains the status of the interrupt requests. The EXTI can detect an external line with a pulse width shorter than the Internal APB2 clock period. Up to 51 GPIOs can be connected to the 16 configurable interrupt/event lines. The 12 other lines are connected to PVD, RTC, USB, USARTs, LPUART, LPTIMER or comparator events.

3.8 Memories

The STM32L053x6/8 devices have the following features:

- 8 Kbytes of embedded SRAM accessed (read/write) at CPU clock speed with 0 wait states. With the enhanced bus matrix, operating the RAM does not lead to any performance penalty during accesses to the system bus (AHB and APB buses).
- The non-volatile memory is divided into three arrays:
  - 32 or 64 Kbytes of embedded flash program memory
  - 2 Kbytes of data EEPROM
  - Information block containing 32 user and factory options bytes plus 4 Kbytes of system memory

The user options bytes are used to write-protect or read-out protect the memory (with 4 Kbyte granularity) and/or readout-protect the whole memory with the following options:

- **Level 0**: no protection
- **Level 1**: memory readout protected.

  The flash memory cannot be read from or written to if either debug features are connected or boot in RAM is selected
- **Level 2**: chip readout protected, debug features (Cortex-M0+ serial wire) and boot in RAM selection disabled (debugline fuse)

The firewall protects parts of code/data from access by the rest of the code that is executed outside of the protected area. The granularity of the protected code segment or the non-volatile data segment is 256 bytes (flash memory or EEPROM) against 64 bytes for the volatile data segment (RAM).

The whole non-volatile memory embeds the error correction code (ECC) feature.

3.9 Boot modes

At startup, BOOT0 pin and nBOOT1 option bit are used to select one of three boot options:

- Boot from flash memory
- Boot from System memory
- Boot from embedded RAM

The boot loader is located in System memory. It is used to reprogram the flash memory by using SPI1(PA4, PA5, PA6, PA7) or SPI2 (PB12, PB13, PB14, PB15), USART1(PA9, PA10) or USART2(PA2, PA3). See STM32 microcontroller system memory boot mode AN2606 for details.

3.10 Direct memory access (DMA)

The flexible 7-channel, general-purpose DMA is able to manage memory-to-memory, peripheral-to-memory and memory-to-peripheral transfers. The DMA controller supports circular buffer management, avoiding the generation of interrupts when the controller reaches the end of the buffer.

Each channel is connected to dedicated hardware DMA requests, with software trigger support for each channel. Configuration is done by software and transfer sizes between source and destination are independent.

The DMA can be used with the main peripherals: SPI, I^2C, USART, LPUART, general-purpose timers, DAC, and ADC.

3.11 Liquid crystal display (LCD)

The LCD drives up to 8 common terminals and 32 segment terminals to drive up to 224 pixels.

- Internal step-up converter to guarantee functionality and contrast control irrespective of V_{DD}. This converter can be deactivated, in which case the V_{LCD} pin is used to provide the voltage to the LCD
- Supports static, 1/2, 1/3, 1/4 and 1/8 duty
- Supports static, 1/2, 1/3 and 1/4 bias
- Phase inversion to reduce power consumption and EMI
- Up to 8 pixels can be programmed to blink
- Unneeded segments and common pins can be used as general I/O pins
- LCD RAM can be updated at any time owing to a double-buffer
- The LCD controller can operate in Stop mode
- V_{LCD} rails decoupling capability

3.12 Analog-to-digital converter (ADC)

A native 12-bit, extended to 16-bit through hardware oversampling, analog-to-digital converter is embedded into STM32L053x6/8 device. It has up to 16 external channels and 3 internal channels (temperature sensor, voltage reference, V_{LCD} voltage measurement). Three channels, PA0, PA4 and PA5, are fast channels, while the others are standard channels.

The ADC performs conversions in single-shot or scan mode. In scan mode, automatic conversion is performed on a selected group of analog inputs.

The ADC frequency is independent from the CPU frequency, allowing maximum sampling rate of 1.14 MSPS even with a low CPU speed. The ADC consumption is low at all frequencies (~25 µA at 10 kSPS, ~200 µA at 1MSPS). An auto-shutdown function guarantees that the ADC is powered off except during the active conversion phase.

The ADC can be served by the DMA controller. It can operate from a supply voltage down to 1.65 V.

The ADC features a hardware oversampler up to 256 samples, this improves the resolution to 16 bits (see AN2668).

An analog watchdog feature allows very precise monitoring of the converted voltage of one, some or all scanned channels. An interrupt is generated when the converted voltage is outside the programmed thresholds.

The events generated by the general-purpose timers (TIMx) can be internally connected to the ADC start triggers, to allow the application to synchronize A/D conversions and timers.

3.13 Temperature sensor

The temperature sensor (T_{SENSE}) generates a voltage V_{SENSE} that varies linearly with temperature.

The temperature sensor is internally connected to the ADC_IN18 input channel which is used to convert the sensor output voltage into a digital value.

The sensor provides good linearity but it has to be calibrated to obtain good overall accuracy of the temperature measurement. As the offset of the temperature sensor varies from chip to chip due to process variation, the uncalibrated internal temperature sensor is suitable for applications that detect temperature changes only.

To improve the accuracy of the temperature sensor measurement, each device is individually factory-calibrated by ST. The temperature sensor factory calibration data are stored by ST in the system memory area, accessible in read-only mode.

Table 6. Temperature sensor calibration values

Calibration value name	Description	Memory address
TSENSE_CAL1	TS ADC raw data acquired at temperature of 30 °C, V_{DDA}= 3 V	0x1FF8 007A - 0x1FF8 007B
TSENSE_CAL2	TS ADC raw data acquired at temperature of 130 °C V_{DDA}= 3 V	0x1FF8 007E - 0x1FF8 007F

3.13.1 Internal voltage reference (V_{REFINT})

The internal voltage reference (V_{REFINT}) provides a stable (bandgap) voltage output for the ADC and Comparators. V_{REFINT} is internally connected to the ADC_IN17 input channel. It enables accurate monitoring of the V_{DD} value (when no external voltage, V_{REF+}, is available for ADC). The precise voltage of V_{REFINT} is individually measured for each part by ST during production test and stored in the system memory area. It is accessible in read-only mode.

Table 7. Internal voltage reference measured values

Calibration value name	Description	Memory address
VREFINT_CAL	Raw data acquired at temperature of 25 °C V_{DDA} = 3 V	0x1FF8 0078 - 0x1FF8 0079

3.13.2 V_{LCD} voltage monitoring

This embedded hardware feature allows the application to measure the V_{LCD} supply voltage using the internal ADC channel ADC_IN16. As the V_{LCD} voltage may be higher than V_{DDA}, and thus outside the ADC input range, the ADC input is connected to LCD_VLCD1 (which provides $1/3V_{LCD}$ when the LCD is configured 1/3Bias and $1/4V_{LCD}$ when the LCD is configured 1/4Bias or 1/2Bias).

3.14 Digital-to-analog converter (DAC)

One 12-bit buffered DAC can be used to convert digital signal into analog voltage signal output. An optional amplifier can be used to reduce the output signal impedance.

This digital Interface supports the following features:

- One data holding register
- Left or right data alignment in 12-bit mode
- Synchronized update capability
- Noise-wave generation
- Triangular-wave generation
- DMA capability (including the underrun interrupt)
- External triggers for conversion
- Input reference voltage V_{REF+}

Four DAC trigger inputs are used in the STM32L053x6/8. The DAC channel is triggered through the timer update outputs that are also connected to different DMA channels.

3.15 Ultra-low-power comparators and reference voltage

The STM32L053x6/8 embed two comparators sharing the same current bias and reference voltage. The reference voltage can be internal or external (coming from an I/O).

- One comparator with ultra low consumption
- One comparator with rail-to-rail inputs, fast or slow mode.
- The threshold can be one of the following:
  - DAC output
  - External I/O pins
  - Internal reference voltage (V_{REFINT})
  - submultiple of Internal reference voltage(1/4, 1/2, 3/4) for the rail to rail comparator.

Both comparators can wake up the devices from Stop mode, and be combined into a window comparator.

The internal reference voltage is available externally via a low-power / low-current output buffer (driving current capability of 1 µA typical).

3.16 System configuration controller

The system configuration controller provides the capability to remap some alternate functions on different I/O ports.

The highly flexible routing interface allows the application firmware to control the routing of different I/Os to the TIM2, TIM21, TIM22 and LPTIM timer input captures. It also controls the routing of internal analog signals to the USB internal oscillator, ADC, COMP1 and COMP2 and the internal reference voltage V_{REFINT}.

3.17 Touch sensing controller (TSC)

The STM32L053x6/8 provide a simple solution for adding capacitive sensing functionality to any application. These devices offer up to 24 capacitive sensing channels distributed over 8 analog I/O groups.

Capacitive sensing technology is able to detect the presence of a finger near a sensor which is protected from direct touch by a dielectric (such as glass, plastic). The capacitive variation introduced by the finger (or any conductive object) is measured using a proven implementation based on a surface charge transfer acquisition principle. It consists of charging the sensor capacitance and then transferring a part of the accumulated charges into a sampling capacitor until the voltage across this capacitor has reached a specific threshold. To limit the CPU bandwidth usage, this acquisition is directly managed by the hardware touch sensing controller and only requires few external components to operate.

The touch sensing controller is fully supported by the STMTouch touch sensing firmware library, which is free to use and allows touch sensing functionality to be implemented reliably in the end application.

Table 8. Capacitive sensing GPIOs available on STM32L053x6/8 devices

Group	Capacitive sensing signal name	Pin name	Group	Capacitive sensing signal name	Pin name
1	TSC_G1_IO1	PA0	5	TSC_G5_IO1	PB3
	TSC_G1_IO2	PA1		TSC_G5_IO2	PB4
	TSC_G1_IO3	PA2		TSC_G5_IO3	PB6
	TSC_G1_IO4	PA3		TSC_G5_IO4	PB7
2	TSC_G2_IO1	PA4(1)	6	TSC_G6_IO1	PB11
	TSC_G2_IO2	PA5		TSC_G6_IO2	PB12
	TSC_G2_IO3	PA6		TSC_G6_IO3	PB13
	TSC_G2_IO4	PA7		TSC_G6_IO4	PB14
3	TSC_G3_IO1	PC5	7	TSC_G7_IO1	PC0
	TSC_G3_IO2	PB0		TSC_G7_IO2	PC1
	TSC_G3_IO3	PB1		TSC_G7_IO3	PC2
	TSC_G3_IO4	PB2		TSC_G7_IO4	PC3

Table 8. Capacitive sensing GPIOs available on STM32L053x6/8 devices

Group	Capacitive sensing signal name	Pin name	Group	Capacitive sensing signal name	Pin name
4	TSC_G4_IO1	PA9	8	TSC_G8_IO1	PC6
	TSC_G4_IO2	PA10		TSC_G8_IO2	PC7
	TSC_G4_IO3	PA11		TSC_G8_IO3	PC8
	TSC_G4_IO4	PA12		TSC_G8_IO4	PC9

1. This GPIO offers a reduced touch sensing sensitivity. It is thus recommended to use it as sampling capacitor I/O.

3.18 Timers and watchdogs

The ultra-low-power STM32L053x6/8 devices include three general-purpose timers, one low- power timer (LPTIM), one basic timer, two watchdog timers and the SysTick timer.

Table 9 compares the features of the general-purpose and basic timers.

Table 9. Timer feature comparison

Timer	Counter resolution	Counter type	Prescaler factor	DMA request generation	Capture/compare channels	Complementary outputs
TIM2	16-bit	Up, down, up/down	Any integer between 1 and 65536	Yes	4	No
TIM21, TIM22	16-bit	Up, down, up/down	Any integer between 1 and 65536	No	2	No
TIM6	16-bit	Up	Any integer between 1 and 65536	Yes	0	No

3.18.1 General-purpose timers (TIM2, TIM21 and TIM22)

There are three synchronizable general-purpose timers embedded in the STM32L053x6/8 devices (see *Table 9* for differences).

TIM2

TIM2 is based on 16-bit auto-reload up/down counter. It includes a 16-bit prescaler. It features four independent channels each for input capture/output compare, PWM or one-pulse mode output.

The TIM2 general-purpose timers can work together or with the TIM21 and TIM22 general-purpose timers via the Timer Link feature for synchronization or event chaining. Their counter can be frozen in debug mode. Any of the general-purpose timers can be used to generate PWM outputs.

TIM2 has independent DMA request generation.

This timer is capable of handling quadrature (incremental) encoder signals and the digital outputs from 1 to 3 hall-effect sensors.

TIM21 and TIM22

TIM21 and TIM22 are based on a 16-bit auto-reload up/down counter. They include a 16-bit prescaler. They have two independent channels for input capture/output compare, PWM or one-pulse mode output. They can work together and be synchronized with the TIM2, full-featured general-purpose timers.

They can also be used as simple time bases and be clocked by the LSE clock source (32.768 kHz) to provide time bases independent from the main CPU clock.

3.18.2 Low-power Timer (LPTIM)

The low-power timer has an independent clock and is running also in Stop mode if it is clocked by LSE, LSI or an external clock. It is able to wake up the devices from Stop mode.

This low-power timer supports the following features:

- 16-bit up counter with 16-bit autoreload register
- 16-bit compare register
- Configurable output: pulse, PWM
- Continuous / one shot mode
- Selectable software / hardware input trigger
- Selectable clock source
  - Internal clock source: LSE, LSI, HSI or APB clock
  - External clock source over LPTIM input (working even with no internal clock source running, used by the Pulse Counter Application)
- Programmable digital glitch filter
- Encoder mode

3.18.3 Basic timer (TIM6)

This timer can be used as a generic 16-bit timebase. It is mainly used for DAC trigger generation.

3.18.4 SysTick timer

This timer is dedicated to the OS, but could also be used as a standard downcounter. It is based on a 24-bit downcounter with autoreload capability and a programmable clock source. It features a maskable system interrupt generation when the counter reaches ‘0’.

3.18.5 Independent watchdog (IWDG)

The independent watchdog is based on a 12-bit downcounter and 8-bit prescaler. It is clocked from an independent 37 kHz internal RC and, as it operates independently of the main clock, it can operate in Stop and Standby modes. It can be used either as a watchdog to reset the device when a problem occurs, or as a free-running timer for application timeout management. It is hardware- or software-configurable through the option bytes. The counter can be frozen in debug mode.

3.18.6 Window watchdog (WWDG)

The window watchdog is based on a 7-bit downcounter that can be set as free-running. It can be used as a watchdog to reset the device when a problem occurs. It is clocked from the main clock. It has an early warning interrupt capability and the counter can be frozen in debug mode.

3.19 Communication interfaces

3.19.1 I²C bus

Two I²C interface (I2C1, I2C2) can operate in multicontroller or target modes.

Each I²C interface can support Standard mode (Sm, up to 100 kbit/s), Fast mode (Fm, up to 400 kbit/s) and Fast Mode Plus (Fm+, up to 1 Mbit/s) with 20 mA output drive on some I/Os.

7-bit and 10-bit addressing modes, multiple 7-bit target addresses (2 addresses, 1 with configurable mask) are also supported as well as programmable analog and digital noise filters.

Table 10. Comparison of I2C analog and digital filters

	Analog filter	Digital filter
Pulse width of suppressed spikes	≥ 50 ns	Programmable length from 1 to 15 I2C peripheral clocks
Benefits	Available in Stop mode	1. Extra filtering capability vs. standard requirements. 2. Stable length
Drawbacks	Variations depending on temperature, voltage, process	Wake-up from Stop on address match is not available when digital filter is enabled.

In addition, I2C1 provides hardware support for SMBus 2.0 and PMBus 1.1: ARP capability, Host notify protocol, hardware CRC (PEC) generation/verification, timeouts verifications and ALERT protocol management. I2C1 also has a clock domain independent from the CPU clock, allowing the I2C1 to wake up the MCU from Stop mode on address match.

Each I2C interface can be served by the DMA controller.

Refer to *Table 11* for an overview of I2C interface features.

Table 11. STM32L053x6/8 I²C implementation

I2C features(1)	I2C1	I2C2
7-bit addressing mode	X	X
10-bit addressing mode	X	X
Standard mode (up to 100 kbit/s)	X	X
Fast mode (up to 400 kbit/s)	X	X
Fast Mode Plus with 20 mA output drive I/Os (up to 1 Mbit/s)	X	X(2)
Independent clock	X	-

Table 11. STM32L053x6/8 I²C implementation (continued)

I2C features(1)	I2C1	I2C2
SMBus	X	-
Wake-up from Stop	X	-

1. X = supported.
2. See *Table 15: STM32L053x6/8 pin definitions on page 41* for the list of I/Os that feature Fast Mode Plus capability

3.19.2 Universal synchronous/asynchronous receiver transmitter (USART)

The two USART interfaces (USART1, USART2) are able to communicate at speeds of up to 4 Mbit/s.

They provide hardware management of the CTS, RTS and RS485 driver enable (DE) signals, multiprocessor communication mode, master synchronous communication and single-wire half-duplex communication mode. They also support SmartCard communication (ISO 7816), IrDA SIR ENDEC, LIN master/slave capability, auto baud rate feature and has a clock domain independent from the CPU clock, allowing to wake up the MCU from Stop mode using baudrates up to 42 Kbaud.

All USART interfaces can be served by the DMA controller.

Table 12 for the supported modes and features of USART interfaces.

Table 12. USART implementation

USART modes/features(1)	USART1 and USART2
Hardware flow control for modem	X
Continuous communication using DMA	X
Multiprocessor communication	X
Synchronous SPI mode (master/slave)	X
Smartcard mode	X
Single-wire half-duplex communication	X
IrDA SIR ENDEC block	X
LIN mode	X
Dual clock domain and wake-up from Stop mode	X
Receiver timeout interrupt	X
Modbus communication	X
Auto baud rate detection (4 modes)	X
Driver Enable	X

1. X = supported.

3.19.3 Low-power universal asynchronous receiver transmitter (LPUART)

The devices embed one Low-power UART. The LPUART supports asynchronous serial communication with minimum power consumption. It supports half duplex single wire communication and modem operations (CTS/RTS). It allows multiprocessor communication.

The LPUART has a clock domain independent from the CPU clock. It can wake up the system from Stop mode using baudrates up to 46 Kbaud. The wake-up events from Stop mode are programmable and can be:

- Start bit detection
- Or any received data frame
- Or a specific programmed data frame

Only a 32.768 kHz clock (LSE) is needed to allow LPUART communication up to 9600 baud. Therefore, even in Stop mode, the LPUART can wait for an incoming frame while having an extremely low energy consumption. Higher speed clock can be used to reach higher baudrates.

LPUART interface can be served by the DMA controller.

3.19.4 Serial peripheral interface (SPI)/Inter-integrated sound (I2S)

Up to two SPIs are able to communicate at up to 16 Mbits/s in slave and master modes in full-duplex and half-duplex communication modes. The 3-bit prescaler gives 8 master mode frequencies and the frame is configurable to 8 bits or 16 bits. The hardware CRC generation/verification supports basic SD Card/MMC modes.

The USARTs with synchronous capability can also be used as SPI master.

One standard I2S interfaces (multiplexed with SPI2) is available. It can operate in master or slave mode, and can be configured to operate with a 16-/32-bit resolution as input or output channels. Audio sampling frequencies from 8 kHz up to 192 kHz are supported. When the I2S interfaces is configured in master mode, the master clock can be output to the external DAC/CODEC at 256 times the sampling frequency.

The SPIs can be served by the DMA controller.

Refer to *Table 13* for the differences between SPI1 and SPI2.

Table 13. SPI/I2S implementation

SPI features(1)	SPI1	SPI2
Hardware CRC calculation	X	X
I2S mode	-	X
TI mode	X	X

1. X = supported.

3.19.5 Universal serial bus (USB)

The STM32L053x6/8 embed a full-speed USB device peripheral compliant with the USB specification version 2.0. The internal USB PHY supports USB FS signaling, embedded DP pull-up and also battery charging detection according to Battery Charging Specification Revision 1.2. The USB interface implements a full-speed (12 Mbit/s) function interface with added support for USB 2.0 Link Power Management. It has software-configurable endpoint setting with packet memory up to 1 Kbyte and suspend/resume support. It requires a precise 48 MHz clock which can be generated from the internal main PLL (the clock source must use a HSE crystal oscillator) or by the internal 48 MHz oscillator in automatic trimming mode. The synchronization for this oscillator can be taken from the USB data stream itself (SOF signalization) which allows crystal-less operation.

3.20 Clock recovery system (CRS)

The STM32L053x6/8 embed a special block which allows automatic trimming of the internal 48 MHz oscillator to guarantee its optimal accuracy over the whole device operational range. This automatic trimming is based on the external synchronization signal, which could be either derived from USB SOF signalization, from LSE oscillator, from an external signal on CRS_SYNC pin or generated by user software. For faster lock-in during startup it is also possible to combine automatic trimming with manual trimming action.

3.21 Cyclic redundancy check (CRC) calculation unit

The CRC (cyclic redundancy check) calculation unit is used to get a CRC code using a configurable generator polynomial value and size.

Among other applications, CRC-based techniques are used to verify data transmission or storage integrity. In the scope of the EN/IEC 60335-1 standard, they offer a means of verifying the flash memory integrity. The CRC calculation unit helps compute a signature of the software during runtime, to be compared with a reference signature generated at linktime and stored at a given memory location.

3.22 Serial wire debug port (SW-DP)

An Arm SW-DP interface is provided to allow a serial wire debugging tool to be connected to the MCU.

4 Pin descriptions

Figure 3. STM32L053x6/8 LQFP64 pinout

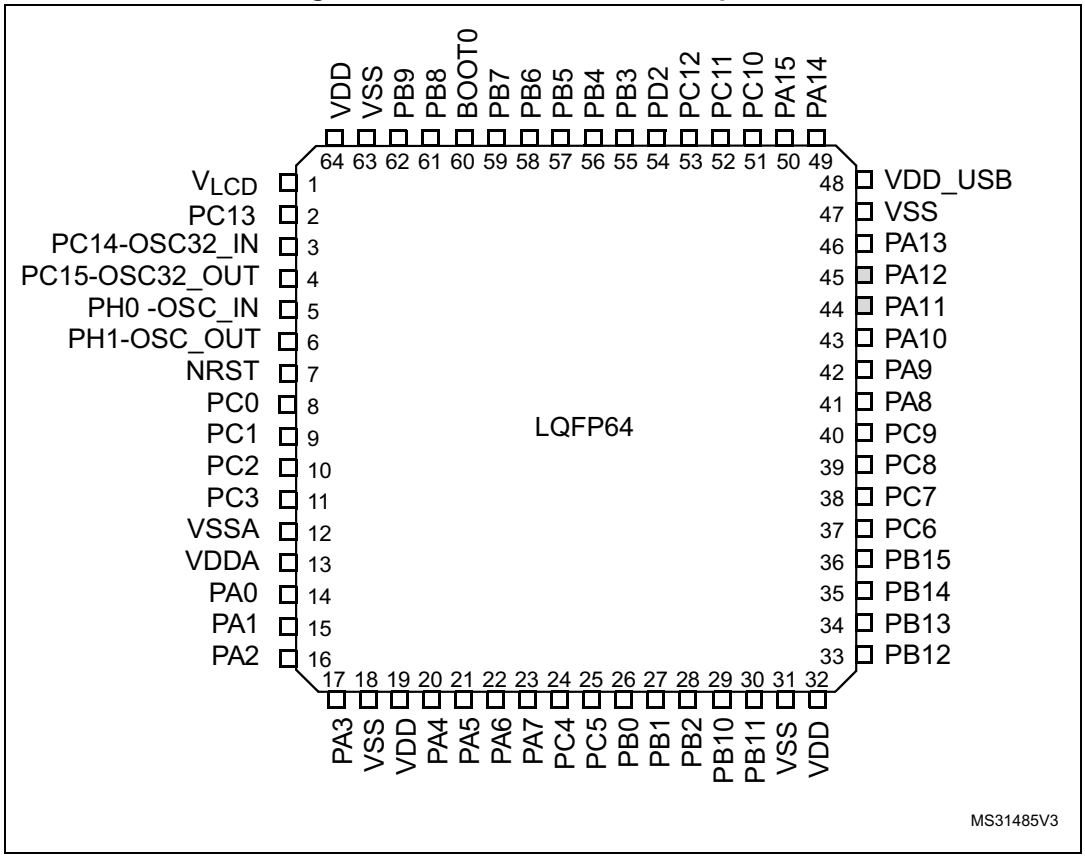

1. The above figure shows the package top view.
2. The I/O pins supplied by VDD_USB are shown in grey.

Figure 4. STM32L053x6/8 TFBGA64 ballout

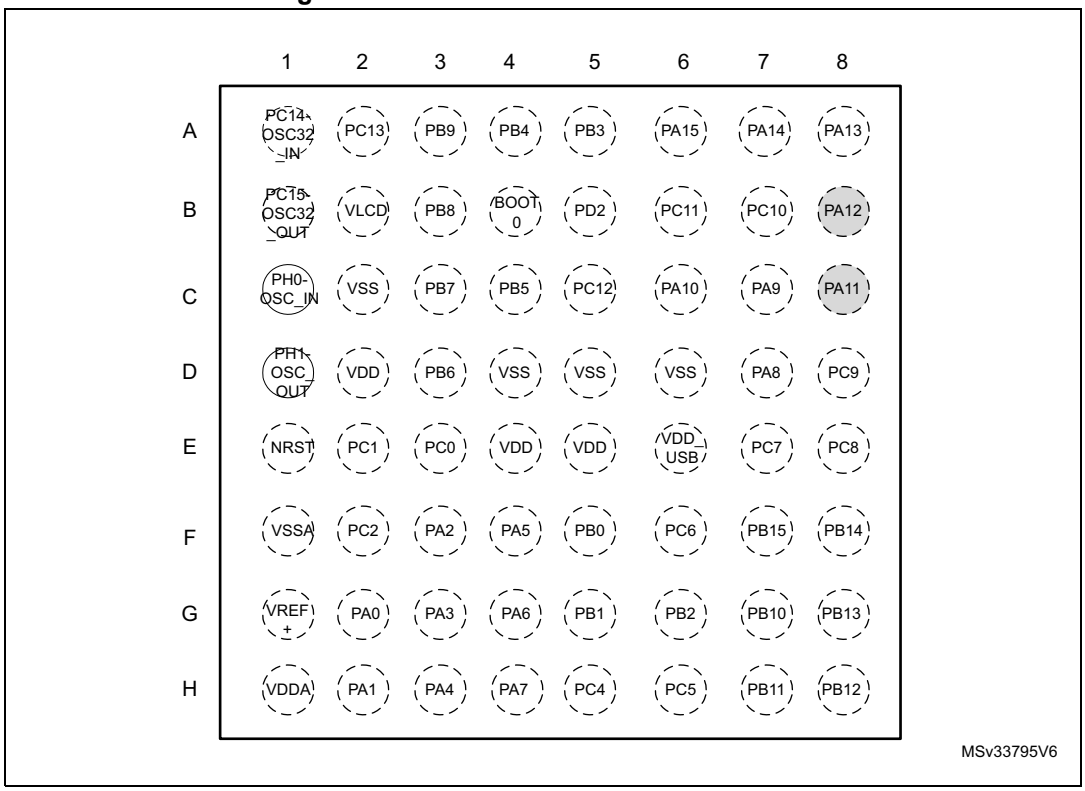

1. The above figure shows the package top view.
2. the I/O pins supplied by VDD_USB are shown in grey.

Figure 5. STM32L053x6/8 LQFP48 pinout

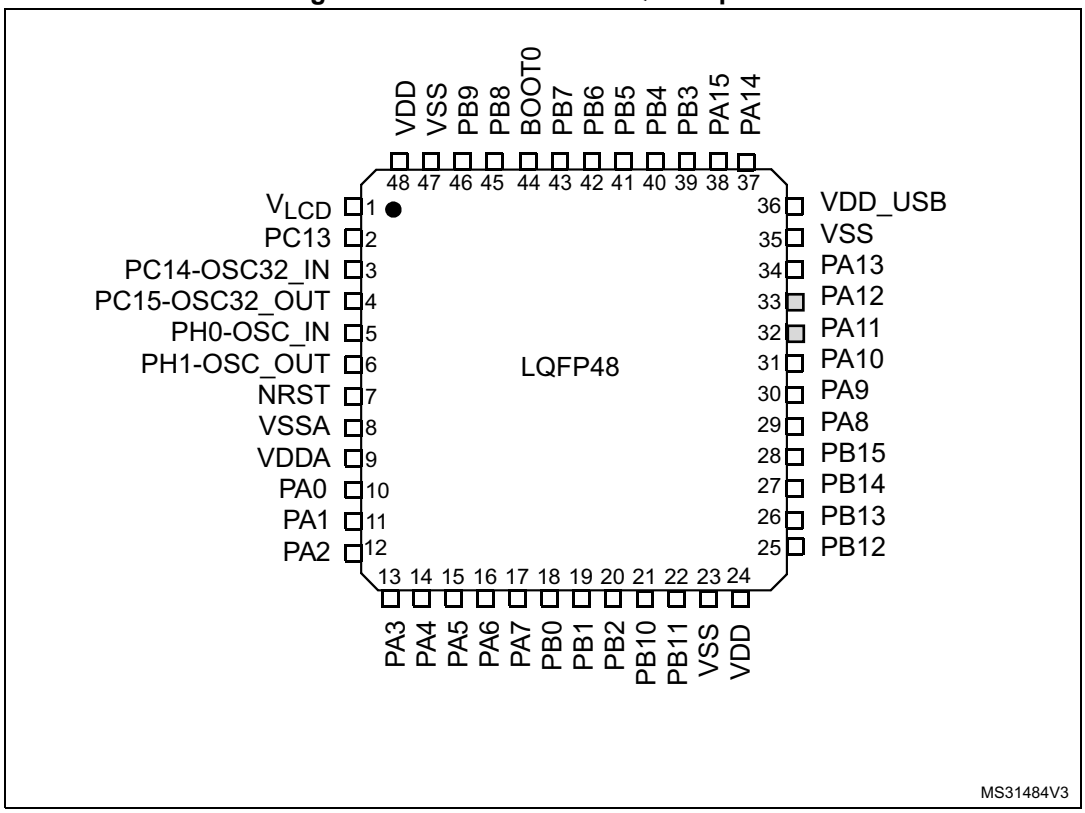

1. The above figure shows the package top view.
2. The I/O pins supplied by VDD_USB are shown in grey.

Figure 6. STM32L053x6/8 UFQFPN48 pinout

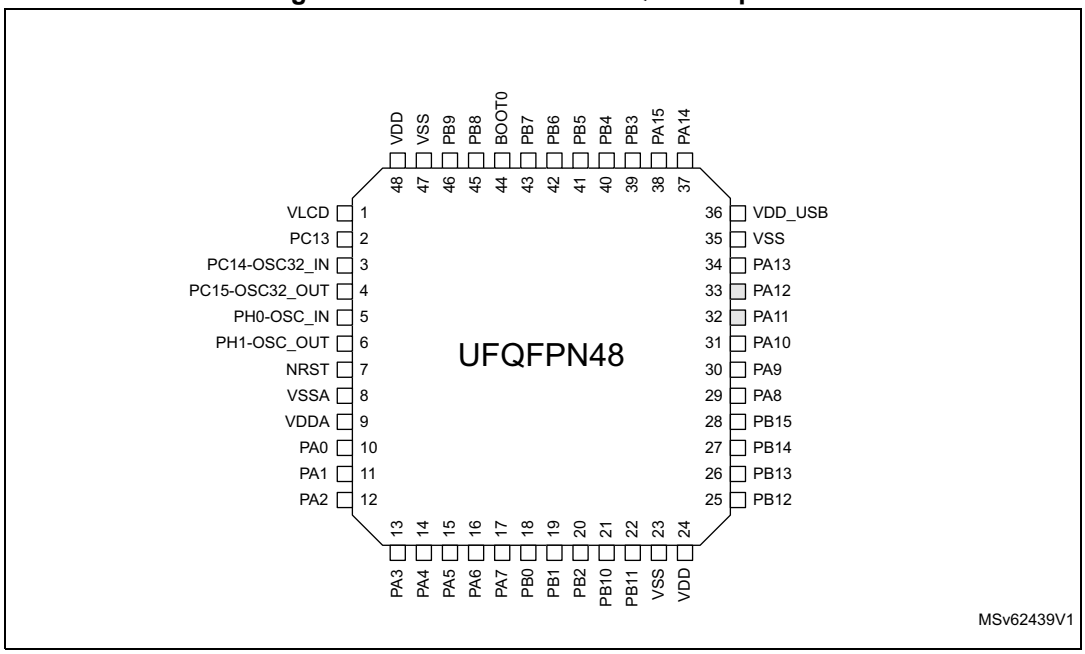

1. The above figure shows the package top view.
2. The I/O pins supplied by VDD_USB are shown in grey.

Table 14. Legend/abbreviations used in the pinout table

Name		Abbreviation	Definition
Pin name		Unless otherwise specified in brackets below the pin name, the pin function during and after reset is the same as the actual pin name	
Pin type		S	Supply pin
		I	Input only pin
		I/O	Input / output pin
I/O structure		FT	5 V tolerant I/O
		FTf	5 V tolerant I/O, FM+ capable
		TC	Standard 3.3V I/O
		B	Dedicated BOOT0 pin
		RST	Bidirectional reset pin with embedded weak pull-up resistor
Notes		Unless otherwise specified by a note, all I/Os are set as floating inputs during and after reset.	
Pin functions	Alternate functions	Functions selected through GPIOx_AFR registers	
	Additional functions	Functions directly selected/enabled through peripheral registers	

Table 15. STM32L053x6/8 pin definitions

Pin number				Pin name (function after reset)	Pin type	I/O structure	Notes	Alternate functions	Additional functions
LQFP48	UFQFPN48	LQFP64	TFBGA64						
1	1	1	B2	VLCD	S	-	-	-	-
2	2	2	A2	PC13	I/O	FT	-	-	RTC_TAMP1/RTC_TS/RTC_OUT/WKUP2
3	3	3	A1	PC14-OSC32_IN (PC14)	I/O	FT	-	-	OSC32_IN
4	4	4	B1	PC15-OSC32_OUT (PC15)	I/O	TC	-	-	OSC32_OUT
5	5	5	C1	PH0-OSC_IN (PH0)	I/O	TC	-	USB_CRS_SYNC	OSC_IN
6	6	6	D1	PH1-OSC_OUT (PH1)	I/O	TC	-	-	OSC_OUT

Table 15. STM32L053x6/8 pin definitions (continued)

Pin number				Pin name (function after reset)	Pin type	I/O structure	Notes	Alternate functions	Additional functions
LQFP48	UFQFPN48	LQFP64	TFBGA64						
7	-	7	E1	NRST	I/O	RST	-	-	-
-	-	8	E3	PC0	I/O	FT	-	LPTIM1_IN1, LCD_SEG18, EVENTOUT, TSC_G7_IO1	ADC_IN10
-	-	9	E2	PC1	I/O	FT	-	LPTIM1_OUT, LCD_SEG19, EVENTOUT, TSC_G7_IO2	ADC_IN11
-	-	10	F2	PC2	I/O	FT	-	LPTIM1_IN2, LCD_SEG20, SPI2_MISO/I2S2_MCK, TSC_G7_IO3	ADC_IN12
-	-	11	-	PC3	I/O	FT	-	LPTIM1_ETR, LCD_SEG21, SPI2_MOSI/I2S2_SD, TSC_G7_IO4	ADC_IN13
8	8	12	F1	VSSA	S	-	-	-	-
-	-	-	G1	VREF+	S	-	-	-	-
9	9	13	H1	VDDA	S	-	-	-	-
10	10	14	G2	PA0	I/O	TC	-	TIM2_CH1, TSC_G1_IO1, USART2_CTS, TIM2_ETR, COMP1_OUT	COMP1_INM6, ADC_IN0, RTC_TAMP2/WKUP1
11	11	15	H2	PA1	I/O	FT	-	EVENTOUT, LCD_SEG0, TIM2_CH2, TSC_G1_IO2, USART2_RTS/ USART2_DE, TIM21_ETR	COMP1_INP, ADC_IN1
12	12	16	F3	PA2	I/O	FT	-	TIM21_CH1, LCD_SEG1, TIM2_CH3, TSC_G1_IO3, USART2_TX, COMP2_OUT	COMP2_INM6, ADC_IN2
13	13	17	G3	PA3	I/O	FT	-	TIM21_CH2, LCD_SEG2, TIM2_CH4, TSC_G1_IO4, USART2_RX	COMP2_INP, ADC_IN3
-	-	18	C2	VSS	S		-	-	-

Table 15. STM32L053x6/8 pin definitions (continued)

Pin number				Pin name (function after reset)	Pin type	I/O structure	Notes	Alternate functions	Additional functions
LQFP48	UFQFPN48	LQFP64	TFBGA64						
-	-	19	D2	VDD	S		-	-	-
14	14	20	H3	PA4	I/O	TC	(1)	SPI1_NSS, TSC_G2_IO1, USART2_CK, TIM22_ETR	COMP1_INM4, COMP2_INM4, ADC_IN4, DAC_OUT
15	15	21	F4	PA5	I/O	TC	(1)	SPI1_SCK, TIM2_ETR, TSC_G2_IO2, TIM2_CH1	COMP1_INM5, COMP2_INM5, ADC_IN5
16	16	22	G4	PA6	I/O	FT	-	SPI1_MISO, LCD_SEG3, TSC_G2_IO3, LPUART1_CTS, TIM22_CH1, EVENTOUT, COMP1_OUT	ADC_IN6
17	17	23	H4	PA7	I/O	FT	-	SPI1_MOSI, LCD_SEG4, TSC_G2_IO4, TIM22_CH2, EVENTOUT, COMP2_OUT	ADC_IN7
-	-	24	H5	PC4	I/O	FT	-	EVENTOUT, LCD_SEG22, LPUART1_TX	ADC_IN14
-	-	25	H6	PC5	I/O	FT	-	LCD_SEG23, LPUART1_RX, TSC_G3_IO1	ADC_IN15
18	18	26	F5	PB0	I/O	FT	-	EVENTOUT, LCD_SEG5, TSC_G3_IO2	LCD_VLCD3, ADC_IN8, VREF_OUT
19	19	27	G5	PB1	I/O	FT	-	LCD_SEG6, TSC_G3_IO3, LPUART1_RTS/ LPUART1_DE	ADC_IN9, VREF_OUT
20	20	28	G6	PB2	I/O	FT	-	LPTIM1_OUT, TSC_G3_IO4	LCD_VLCD2
21	21	29	G7	PB10	I/O	FT	-	LCD_SEG10, TIM2_CH3, TSC_SYNC, LPUART1_TX, SPI2_SCK, I2C2_SCL	-
22	22	30	H7	PB11	I/O	FT	-	EVENTOUT, LCD_SEG11, TIM2_CH4, TSC_G6_IO1, LPUART1_RX, I2C2_SDA	-

Table 15. STM32L053x6/8 pin definitions (continued)

Pin number				Pin name (function after reset)	Pin type	I/O structure	Notes	Alternate functions	Additional functions
LQFP48	UFQFPN48	LQFP64	TFBGA64						
23	23	31	D6	VSS	S		-	-	-
24	24	32	E5	VDD	S		-	-	-
25	25	33	H8	PB12	I/O	FT	-	SPI2_NSS/I2S2_WS, LCD_SEG12, LPUART1_RTS/ LPUART1_DE, TSC_G6_IO2, I2C2_SMBA, EVENTOUT	LCD_VLCD1
26	26	34	G8	PB13	I/O	FTf	-	SPI2_SCK/I2S2_CK, LCD_SEG13, TSC_G6_IO3, LPUART1_CTS, I2C2_SCL, TIM21_CH1	-
27	27	35	F8	PB14	I/O	FTf	-	SPI2_MISO/I2S2_MCK, LCD_SEG14, RTC_OUT, TSC_G6_IO4, LPUART1_RTS/ LPUART1_DE, I2C2_SDA, TIM21_CH2	-
28	28	36	F7	PB15	I/O	FT	-	SPI2_MOSI/I2S2_SD, LCD_SEG15, RTC_REFIN	-
-	-	37	F6	PC6	I/O	FT	-	TIM22_CH1, LCD_SEG24, TSC_G8_IO1	-
-	-	38	E7	PC7	I/O	FT	-	TIM22_CH2, LCD_SEG25, TSC_G8_IO2	-
-	-	39	E8	PC8	I/O	FT	-	TIM22_ETR, LCD_SEG26, TSC_G8_IO3	-
-	-	40	D8	PC9	I/O	FT	-	TIM21_ETR, LCD_SEG27, USB_NOE, TSC_G8_IO4	-

Table 15. STM32L053x6/8 pin definitions (continued)

Pin number				Pin name (function after reset)	Pin type	I/O structure	Notes	Alternate functions	Additional functions
LQFP48	UFQFPN48	LQFP64	TFBGA64						
29	29	41	D7	PA8	I/O	FT	-	MCO, LCD_COM0, USB_CRS_SYNC, EVENTOUT, USART1_CK	-
30	30	42	C7	PA9	I/O	FT	-	MCO, LCD_COM1, TSC_G4_IO1, USART1_TX	-
31	31	43	C6	PA10	I/O	FT	-	LCD_COM2, TSC_G4_IO2, USART1_RX	-
32	32	44	C8	PA11	I/O	FT	(2)	SPI1_MISO, EVENTOUT, TSC_G4_IO3, USART1_CTS, COMP1_OUT	USB_DM
33	33	45	B8	PA12	I/O	FT	(2)	SPI1_MOSI, EVENTOUT, TSC_G4_IO4, USART1_RTS/ USART1_DE, COMP2_OUT	USB_DP
34	34	46	A8	PA13	I/O	FT	-	SWDIO, USB_NOE	-
35	35	47	D5	VSS	S		-	-	-
36	36	48	E6	VDD_USB	S		-	-	-
37	37	49	A7	PA14	I/O	FT	-	SWCLK, USART2_TX	-
38	38	50	A6	PA15	I/O	FT	-	SPI1_NSS, LCD_SEG17, TIM2_ETR, EVENTOUT, USART2_RX, TIM2_CH1	-
-	-	51	B7	PC10	I/O	FT	-	LPUART1_TX, LCD_COM4/LCD_SEG28 /LCD_SEG40	-
-	-	52	B6	PC11	I/O	FT	-	LPUART1_RX, LCD_COM5/LCD_SEG29 /LCD_SEG41	-
-	-	53	C5	PC12	I/O	FT	-	LCD_COM6/LCD_SEG30 /LCD_SEG42	-

Table 15. STM32L053x6/8 pin definitions (continued)

Pin number				Pin name (function after reset)	Pin type	I/O structure	Notes	Alternate functions	Additional functions
LQFP48	UFQFPN48	LQFP64	TFBGA64						
-	-	54	B5	PD2	I/O	FT	-	LPUART1_RTS/ LPUART1_DE, LCD_COM7/LCD_SEG31 /LCD_SEG43	-
39	39	55	A5	PB3	I/O	FT	-	SPI1_SCK, LCD_SEG7, TIM2_CH2, TSC_G5I_O1, EVENTOUT	COMP2_INN
40	40	56	A4	PB4	I/O	FT	-	SPI1_MISO, LCD_SEG8, EVENTOUT, TSC_G5_IO2, TIM22_CH1	COMP2_INP
41	41	57	C4	PB5	I/O	FT	-	SPI1_MOSI, LCD_SEG9, LPTIM1_IN1, I2C1_SMBA, TIM22_CH2	COMP2_INP
42	42	58	D3	PB6	I/O	FTf	-	USART1_TX, I2C1_SCL, LPTIM1_ETR, TSC_G5_IO3	COMP2_INP
43	43	59	C3	PB7	I/O	FTf	-	USART1_RX, I2C1_SDA, LPTIM1_IN2, TSC_G5_IO4	COMP2_INP, PVD_IN
44	44	60	B4	BOOT0	I	B	-	-	-
45	45	61	B3	PB8	I/O	FTf	-	LCD_SEG16, TSC_SYNC, I2C1_SCL	-
46	46	62	A3	PB9	I/O	FTf	-	LCD_COM3, EVENTOUT, I2C1_SDA, SPI2_NSS/I2S2_WS	-
47	47	63	D4	VSS	S	-	-	-	-
48	48	64	E4	VDD	S	-	-	-	-

1. PA4 and PA5 offer a reduced touch sensing sensitivity. It is thus recommended to use them as sampling capacitor I/Os.
2. These pins are powered by VDD_USB. For all characteristics that refer to V_{DD}, V_{DD_USB} must be used instead.

Table 16. Alternate function port A

Port		AF0	AF1	AF2	AF3	AF4	AF5	AF6	AF7
		SPI1/TIM21/SYS_AF/EVENTOUT/	LCD	USB/TIM2/ EVENTOUT/	TSC/ EVENTOUT	USART1/2/3	TIM2/21/22	EVENTOUT	COMP1/2
Port A	PA0	-	-	TIM2_CH1	TSC_G1_IO1	USART2_CTS	TIM2_ETR	-	COMP1_OUT
	PA1	EVENTOUT	LCD_SEG0	TIM2_CH2	TSC_G1_IO2	USART2_RTS/ USART2_DE	TIM21_ETR	-	-
	PA2	TIM21_CH1	LCD_SEG1	TIM2_CH3	TSC_G1_IO3	USART2_TX	-	-	COMP2_OUT
	PA3	TIM21_CH2	LCD_SEG2	TIM2_CH4	TSC_G1_IO4	USART2_RX	-	-	-
	PA4 (1)	SPI1_NSS	-	-	TSC_G2_IO1	USART2_CK	TIM22_ETR	-	-
	PA5(1)	SPI1_SCK	-	TIM2_ETR	TSC_G2_IO2	-	TIM2_CH1	-	-
	PA6	SPI1_MISO	LCD_SEG3	-	TSC_G2_IO3	LPUART1_CTS	TIM22_CH1	EVENTOUT	COMP1_OUT
	PA7	SPI1_MOSI	LCD_SEG4	-	TSC_G2_IO4	-	TIM22_CH2	EVENTOUT	COMP2_OUT
	PA8	MCO	LCD_COM0	USB_CRS_SYNC	EVENTOUT	USART1_CK	-	-	-
	PA9	MCO	LCD_COM1	-	TSC_G4_IO1	USART1_TX	-	-	-
	PA10	-	LCD_COM2	-	TSC_G4_IO2	USART1_RX	-	-	-
	PA11	SPI1_MISO	-	EVENTOUT	TSC_G4_IO3	USART1_CTS	-	-	COMP1_OUT
	PA12	SPI1_MOSI	-	EVENTOUT	TSC_G4_IO4	USART1_RTS/ USART1_DE	-	-	COMP2_OUT
	PA13	SWDIO	-	USB_NOE	-	-	-	-	-
	PA14	SWCLK	-	-	-	USART2_TX	-	-	-
	PA15	SPI1_NSS	LCD_SEG17	TIM2_ETR	EVENTOUT	USART2_RX	TIM2_CH1	-	-

1. PA4 and PA5 offer a reduced touch sensing sensitivity. It is thus recommended to use them as sampling capacitor I/Os.

Table 17. Alternate function port B

Port		AF0	AF1	AF2	AF3	AF4	AF5	AF6
		SPI1/SPI2/I2S2/ USART1/ EVENTOUT/	I2C1/LCD	LPUART1/LPTIM /TIM2/SYS_AF/ EVENTOUT	I2C1/TSC	I2C1/TIM22/ EVENTOUT/ LPUART1	SPI2/I2S2/I2C2	I2C2/TIM21/ EVENTOUT
Port B	PB0	EVENTOUT	LCD_SEG5	-	TSC_G3_IO2	-	-	-
	PB1	-	LCD_SEG6	-	TSC_G3_IO3	LPUART1_RTS/ LPUART1_DE	-	-
	PB2	-	-	LPTIM1_OUT	TSC_G3_IO4	-	-	-
	PB3	SPI1_SCK	LCD_SEG7	TIM2_CH2	TSC_G5I_O1	EVENTOUT	-	-
	PB4	SPI1_MISO	LCD_SEG8	EVENTOUT	TSC_G5_IO2	TIM22_CH1	-	-
	PB5	SPI1_MOSI	LCD_SEG9	LPTIM1_IN1	I2C1_SMBA	TIM22_CH2	-	-
	PB6	USART1_TX	I2C1_SCL	LPTIM1_ETR	TSC_G5_IO3	-	-	-
	PB7	USART1_RX	I2C1_SDA	LPTIM1_IN2	TSC_G5_IO4	-	-	-
	PB8	-	LCD_SEG16	-	TSC_SYNC	I2C1_SCL	-	-
	PB9	-	LCD_COM3	EVENTOUT	-	I2C1_SDA	SPI2_NSS/I2S2_ WS	-
	PB10	-	LCD_SEG10	TIM2_CH3	TSC_SYNC	LPUART1_TX	SPI2_SCK	I2C2_SCL
	PB11	EVENTOUT	LCD_SEG11	TIM2_CH4	TSC_G6_IO1	LPUART1_RX	-	I2C2_SDA
	PB12	SPI2_NSS/I2S2_WS	LCD_SEG12	LPUART1_RTS/ LPUART1_DE	TSC_G6_IO2	-	I2C2_SMBA	EVENTOUT
	PB13	SPI2_SCK/I2S2_CK	LCD_SEG13	-	TSC_G6_IO3	LPUART1_CTS	I2C2_SCL	TIM21_CH1
	PB14	SPI2_MISO/I2S2_MCK	LCD_SEG14	RTC_OUT	TSC_G6_IO4	LPUART1_RTS/ LPUART1_DE	I2C2_SDA	TIM21_CH2
	PB15	SPI2_MOSI/I2S2_SD	LCD_SEG15	RTC_REFIN	-	-	-	-

Table 18. Alternate function port C

Port		AF0	AF1	AF2	AF3
		LPUART1/LPTIM/ TIM21/12/ EVENTOUT/	LCD	SPI2/I2S2/USB/ LPUART1/ EVENTOUT	TSC
Port C	PC0	LPTIM1_IN1	LCD_SEG18	EVENTOUT	TSC_G7_IO1
	PC1	LPTIM1_OUT	LCD_SEG19	EVENTOUT	TSC_G7_IO2
	PC2	LPTIM1_IN2	LCD_SEG20	SPI2_MISO/I2S2_MCK	TSC_G7_IO3
	PC3	LPTIM1_ETR	LCD_SEG21	SPI2_MOSI/I2S2_SD	TSC_G7_IO4
	PC4	EVENTOUT	LCD_SEG22	LPUART1_TX	-
	PC5	-	LCD_SEG23	LPUART1_RX	TSC_G3_IO1
	PC6	TIM22_CH1	LCD_SEG24	-	TSC_G8_IO1
	PC7	TIM22_CH2	LCD_SEG25	-	TSC_G8_IO2
	PC8	TIM22_ETR	LCD_SEG26	-	TSC_G8_IO3
	PC9	TIM21_ETR	LCD_SEG27	USB_NOE	TSC_G8_IO4
	PC10	LPUART1_TX	LCD_COM4/LCD_SEG28	-	-
	PC11	LPUART1_RX	LCD_COM5/LCD_SEG29	-	-
	PC12	-	LCD_COM6/LCD_SEG30	-	-
	PC13	-	-	-	-
	PC14	-	-	-	-
	PC15	-	-	-	-

Table 19. Alternate function port D

Port		AF0	AF1
		LPUART1	LCD
Port D	PD2	LPUART1_RTS/LPUART1_DE	LCD_COM7/LCD_SEG31

Table 20. Alternate function port H

Port		AF0
Port H	PH0	USB_CRS_SYNC
	PH1	-

5 Memory mapping

Refer to the product line reference manual for details on the memory mapping as well as the boundary addresses for all peripherals.

6 Electrical characteristics

6.1 Parameter conditions

Unless otherwise specified, all voltages are referenced to V_{SS}.

6.1.1 Minimum and maximum values

Unless otherwise specified the minimum and maximum values are guaranteed in the worst conditions of ambient temperature, supply voltage and frequencies by tests in production on 100% of the devices with an ambient temperature at T_A = 25 °C and T_A = $T_A$max (given by the selected temperature range).

Data based on characterization results, design simulation and/or technology characteristics are indicated in the table footnotes and are not tested in production. Based on characterization, the minimum and maximum values refer to sample tests and represent the mean value plus or minus three times the standard deviation (mean±3σ).

6.1.2 Typical values

Unless otherwise specified, typical data are based on T_A = 25 °C, V_{DD} = 3.6 V (for the 1.65 V ≤V_{DD} ≤3.6 V voltage range). They are given only as design guidelines and are not tested.

Typical ADC accuracy values are determined by characterization of a batch of samples from a standard diffusion lot over the full temperature range, where 95% of the devices have an error less than or equal to the value indicated (mean±2σ).

6.1.3 Typical curves

Unless otherwise specified, all typical curves are given only as design guidelines and are not tested.

6.1.4 Loading capacitor

The loading conditions used for pin parameter measurement are shown in *Figure 7*.

6.1.5 Pin input voltage

The input voltage measurement on a pin of the device is described in *Figure 8*.

Figure 7. Pin loading conditions

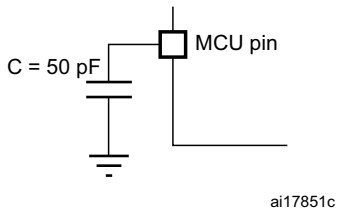

Figure 8. Pin input voltage

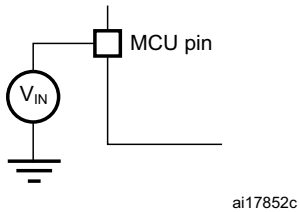

6.1.6 Power supply scheme

Figure 9. Power supply scheme

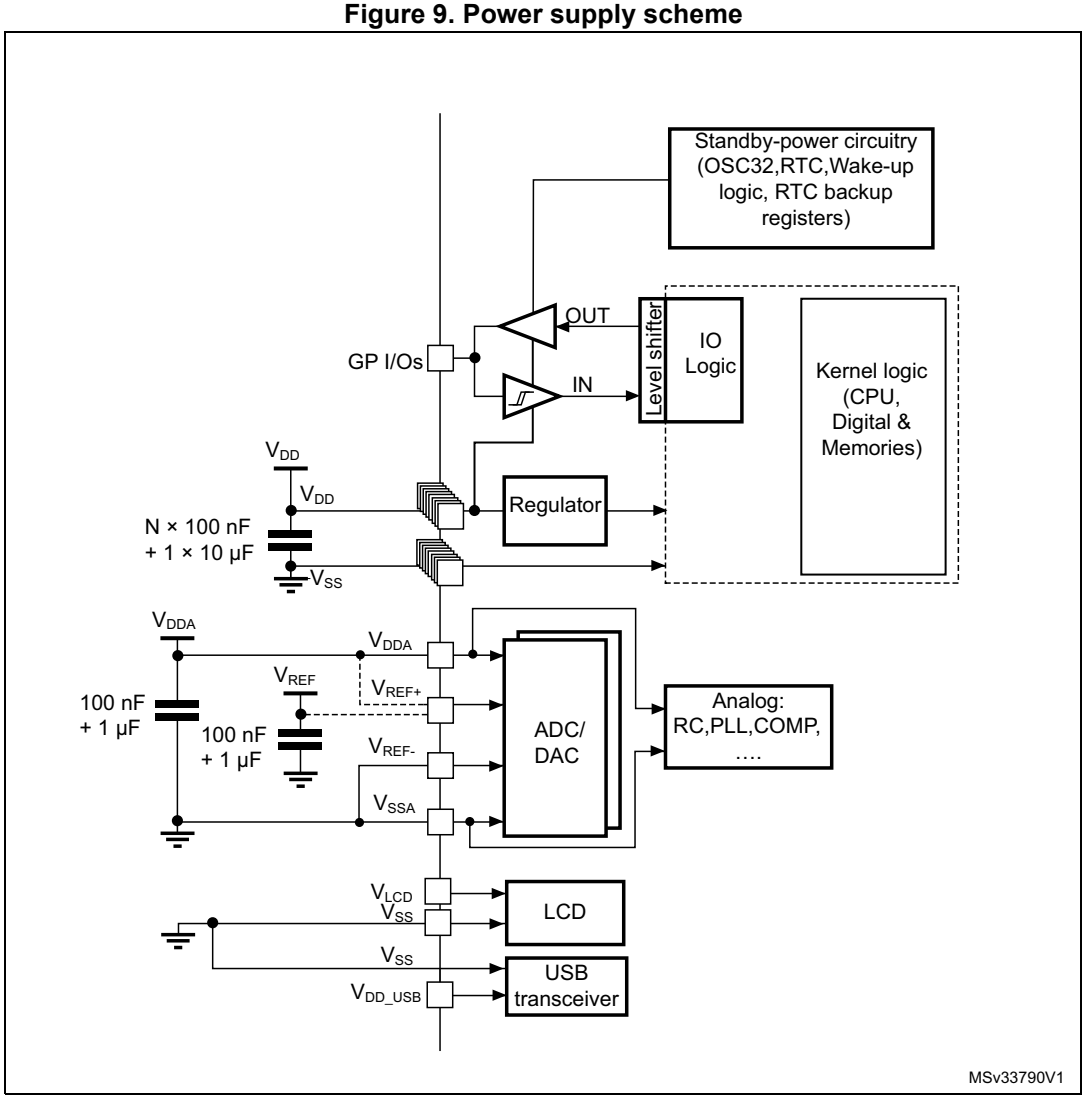

6.1.7 Optional LCD power supply scheme

Figure 10. Optional LCD power supply scheme

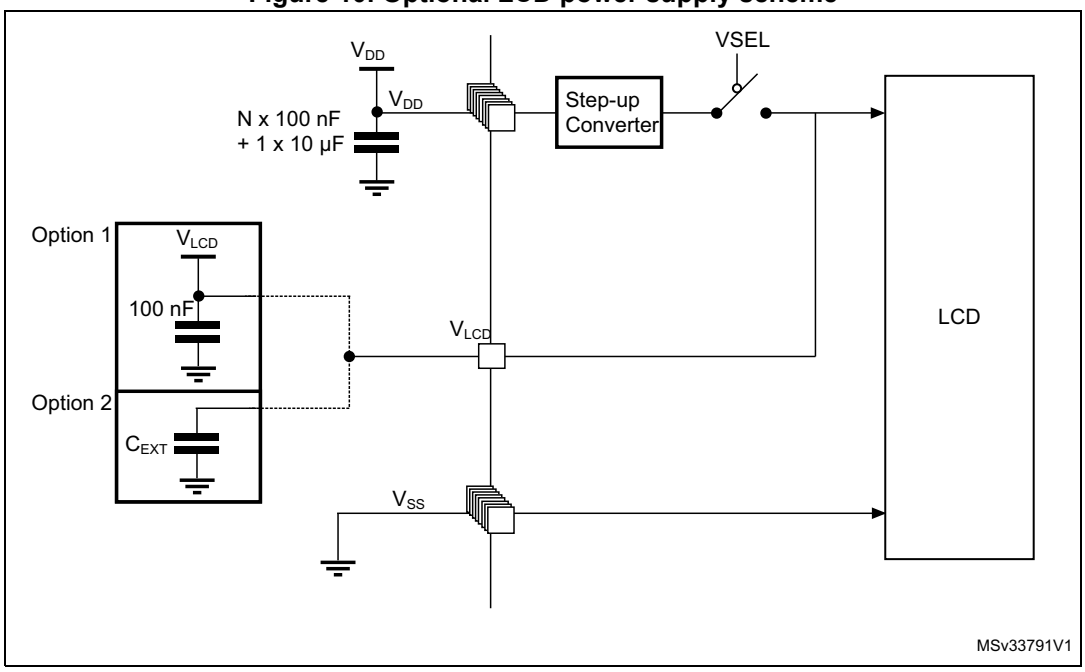

1. Option 1: LCD power supply is provided by a dedicated VLCD supply source, VSEL switch is open.
2. Option 2: LCD power supply is provided by the internal step-up converter, VSEL switch is closed, an external capacitance is needed for correct behavior of this converter.

6.1.8 Current consumption measurement

Figure 11. Current consumption measurement scheme

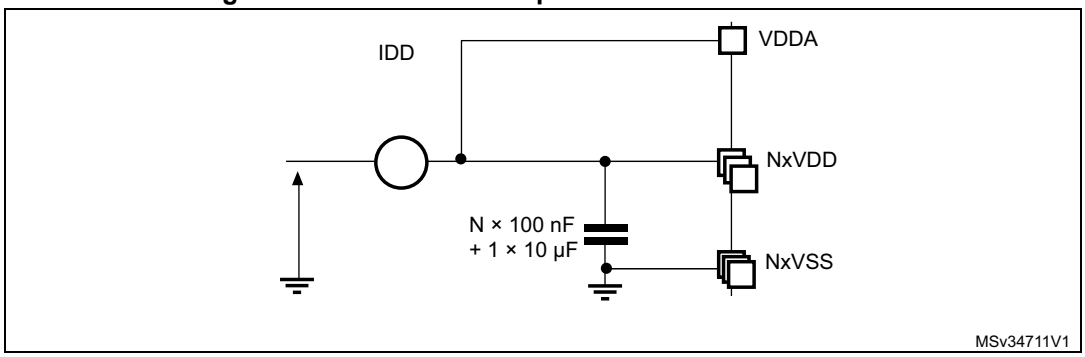

6.2 Absolute maximum ratings

Stresses above the absolute maximum ratings listed in *Table 21: Voltage characteristics*, *Table 22: Current characteristics*, and *Table 23: Thermal characteristics* may cause permanent damage to the device. These are stress ratings only and functional operation of the device at these conditions is not implied. Exposure to maximum rating conditions for extended periods may affect device reliability. Device mission profile (application conditions) is compliant with JEDEC JESD47 Qualification Standard. Extended mission profiles are available on demand.

Table 21. Voltage characteristics

Symbol	Definition	Min	Max	Unit
V_{DD}–V_{SS}	External main supply voltage (including V_{DDA}, V_{DD_USB}, V_{DD})(1)	–0.3	4.0	V
V_{IN}(2)	Input voltage on FT and FTf pins	V_{SS} –0.3	Min(Min(V_{DD}, V_{DDA}) + 3.6 V, 5.5 V)	
	Input voltage on TC pins	V_{SS} –0.3	4.0	
	Input voltage on BOOT0	V_{SS}	V_{DD} +4.0	
	Input voltage on any other pin	V_{SS} –0.3	4.0	
$\lvert\Delta V_{DD}\rvert$	Variations between different V_{DDx} power pins	-	50	mV
$\lvert V_{DDA}-V_{DDx}\rvert$	Variations between any V_{DDx} and V_{DDA} power pins(3)	-	300	
$\lvert\Delta V_{SS}\rvert$	Variations between all different ground pins	-	50	
V_{REF+} –V_{DDA}	Allowed voltage difference for V_{REF+} > V_{DDA}	-	0.4	V
$V_{ESD(HBM)}$	Electrostatic discharge voltage (human body model)	see *Section 6.3.11*		

1. All main power (V_{DD},V_{DD_USB}, V_{DDA}) and ground (V_{SS}, V_{SSA}) pins must always be connected to the external power supply, in the permitted range.
2. V_{IN} maximum must always be respected. Refer to *Table 22* for maximum allowed injected current values.
3. It is recommended to power V_{DD} and V_{DDA} from the same source. A maximum difference of 300 mV between V_{DD} and V_{DDA} can be tolerated during power-up and device operation. V_{DD_USB} is independent from V_{DD} and V_{DDA}: its value does not need to respect this rule.

Table 22. Current characteristics

Symbol	Ratings	Max.	Unit
ΣI_{VDD} (2)	Total current into sum of all V_{DD} power lines (source)(1)	105	mA
ΣI_{VSS} (2)	Total current out of sum of all V_{SS} ground lines (sink)(1)	105	
ΣI_{VDD_USB}	Total current into V_{DD_USB} power lines (source)	25	
$I_{VDD(PIN)}$	Maximum current into each V_{DD} power pin (source)(1)	100	
$I_{VSS(PIN)}$	Maximum current out of each V_{SS} ground pin (sink)(1)	100	
I_{IO}	Output current sunk by any I/O and control pin except FTf pins	16	
	Output current sunk by FTf pins	22	
	Output current sourced by any I/O and control pin	-16	
$\Sigma I_{IO(PIN)}$	Total output current sunk by sum of all IOs and control pins except PA11 and PA12(2)	90	
	Total output current sunk by PA11 and PA12	25	
	Total output current sourced by sum of all IOs and control pins(2)	-90	
$I_{INJ(PIN)}$	Injected current on FT, FTf, RST and B pins	-5/+0(3)	
	Injected current on TC pin	± 5(4)	
$\Sigma I_{INJ(PIN)}$	Total injected current (sum of all I/O and control pins)(5)	± 25	

1. All main power (V_{DD}, V_{DDA}) and ground (V_{SS}, V_{SSA}) pins must always be connected to the external power supply, in the permitted range.
2. This current consumption must be correctly distributed over all I/Os and control pins. The total output current must not be sunk/sourced between two consecutive power supply pins referring to high pin count LQFP packages.
3. Positive current injection is not possible on these I/Os. A negative injection is induced by $V_{IN}<V_{SS}$. $I_{INJ(PIN)}$ must never be exceeded. Refer to *Table 21* for maximum allowed input voltage values.
4. A positive injection is induced by $V_{IN} > V_{DD}$ while a negative injection is induced by $V_{IN} < V_{SS}$. $I_{INJ(PIN)}$ must never be exceeded. Refer to *Table 21: Voltage characteristics* for the maximum allowed input voltage values.
5. When several inputs are submitted to a current injection, the maximum $\Sigma I_{INJ(PIN)}$ is the absolute sum of the positive and negative injected currents (instantaneous values).

Table 23. Thermal characteristics

Symbol	Ratings	Value	Unit
T_{STG}	Storage temperature range	–65 to +150	°C
T_J	Maximum junction temperature	150	°C

6.3 Operating conditions

6.3.1 General operating conditions

Table 24. General operating conditions

Symbol	Parameter	Conditions	Min	Max	Unit
f_{HCLK}	Internal AHB clock frequency	-	0	32	MHz
f_{PCLK1}	Internal APB1 clock frequency	-	0	32	
f_{PCLK2}	Internal APB2 clock frequency	-	0	32	
V_{DD}	Standard operating voltage	BOR detector disabled	1.65	3.6	V
		BOR detector enabled, at power-on	1.8	3.6	
		BOR detector disabled, after power-on	1.65	3.6	
V_{DDA}	Analog operating voltage (DAC not used)	Must be the same voltage as V_{DD}(1)	1.65	3.6	V
V_{DDA}	Analog operating voltage (all features)	Must be the same voltage as V_{DD}(1)	1.8	3.6	V
V_{DD_USB}	Standard operating voltage, USB domain(2)	USB peripheral used	3.0	3.6	V
		USB peripheral not used	0	3.6	
V_{IN}	Input voltage on FT, FTf and RST pins(3)	2.0 V ≤V_{DD} ≤3.6 V	-0.3	5.5	V
		1.65 V ≤V_{DD} ≤2.0 V	-0.3	5.2	
	Input voltage on BOOT0 pin	-	0	5.5	
	Input voltage on TC pin	-	-0.3	V_{DD}+0.3	
P_D	Power dissipation at T_A = 85 °C (range 6) or T_A =105 °C (rage 7) (4)	TFBGA64	-	327	mW
		LQFP64	-	444	
		LQFP48	-	363	
		UFQFPN48	-	654	
	Power dissipation at T_A = 125 °C (range 3)(4)	TFBGA64	-	81	
		LQFP64	-	111	
		LQFP48 packge	-	91	
		UFQFPN48	-	163	
T_A	Temperature range	Maximum power dissipation (range 6)	–40	85	°C
		Maximum power dissipation (range 7)	–40	105	
		Maximum power dissipation (range 3)	–40	125	
T_J	Junction temperature range (range 6)	-40 °C ≤T_A ≤85 °	–40	105	
	Junction temperature range (range 7)	-40 °C ≤T_A ≤105 °C	–40	125	
	Junction temperature range (range 3)	-40 °C ≤T_A ≤125 °C	–40	130	

1. It is recommended to power V_{DD} and V_{DDA} from the same source. A maximum difference of 300 mV between V_{DD} and V_{DDA} can be tolerated during power-up and normal operation.

2. V_{DD_USB} must respect the following conditions:
   - When V_{DD} is powered-on ($V_{DD} < V_{DD_min}$), V_{DD_USB} should be always lower than V_{DD}.
   - When V_{DD} is powered-down ($V_{DD} < V_{DD_min}$), V_{DD_USB} should be always lower than V_{DD}.
   - In operating mode, V_{DD_USB} could be lower or higher V_{DD}.
   - If the USB is not used, V_{DD_USB} must range from V_{DD_min} to V_{DD_max} to be able to use PA11 and PA12 as standard I/Os.
   - If the USB is not used and PA11/PA12 are not used as standard I/Os, VDD_USB must be connected to a V_{SS} or V_{DD} power supply voltage (VDD_USB must not be left floating).
3. To sustain a voltage higher than V_{DD}+0.3V, the internal pull-up/pull-down resistors must be disabled.
4. If T_A is lower, higher P_D values are allowed as long as T_J does not exceed T_J max (see *Table 85: Thermal characteristics on page 130*).

6.3.2 Embedded reset and power control block characteristics

The parameters given in the following table are derived from the tests performed under the ambient temperature condition summarized in *Table 24*.

Table 25. Embedded reset and power control block characteristics

Symbol	Parameter	Conditions	Min	Typ	Max	Unit
t_{VDD}(1)	V_{DD} rise time rate	BOR detector enabled	0	-	∞	µs/V
		BOR detector disabled	0	-	1000	
	V_{DD} fall time rate	BOR detector enabled	20	-	∞	
		BOR detector disabled	0	-	1000	
$T_{RSTTEMPO}$(1)	Reset temporization	V_{DD} rising, BOR enabled	-	2	3.3	ms
		V_{DD} rising, BOR disabled(2)	0.4	0.7	1.6	
$V_{POR/PDR}$	Power-on/power down reset threshold	Falling edge	1	1.5	1.65	V
		Rising edge	1.3	1.5	1.65	
V_{BOR0}	Brown-out reset threshold 0	Falling edge	1.67	1.7	1.74	
		Rising edge	1.69	1.76	1.8	
V_{BOR1}	Brown-out reset threshold 1	Falling edge	1.87	1.93	1.97	
		Rising edge	1.96	2.03	2.07	
V_{BOR2}	Brown-out reset threshold 2	Falling edge	2.22	2.30	2.35	
		Rising edge	2.31	2.41	2.44	
V_{BOR3}	Brown-out reset threshold 3	Falling edge	2.45	2.55	2.6	
		Rising edge	2.54	2.66	2.7	
V_{BOR4}	Brown-out reset threshold 4	Falling edge	2.68	2.8	2.85	
		Rising edge	2.78	2.9	2.95	
V_{PVD0}	Programmable voltage detector threshold 0	Falling edge	1.8	1.85	1.88	
		Rising edge	1.88	1.94	1.99	
V_{PVD1}	PVD threshold 1	Falling edge	1.98	2.04	2.09	
		Rising edge	2.08	2.14	2.18	
V_{PVD2}	PVD threshold 2	Falling edge	2.20	2.24	2.28	
		Rising edge	2.28	2.34	2.38	
V_{PVD3}	PVD threshold 3	Falling edge	2.39	2.44	2.48	
		Rising edge	2.47	2.54	2.58	
V_{PVD4}	PVD threshold 4	Falling edge	2.57	2.64	2.69	
		Rising edge	2.68	2.74	2.79	
V_{PVD5}	PVD threshold 5	Falling edge	2.77	2.83	2.88	
		Rising edge	2.87	2.94	2.99	

Table 25. Embedded reset and power control block characteristics (continued)

Symbol	Parameter	Conditions	Min	Typ	Max	Unit
V_{PVD6}	PVD threshold 6	Falling edge	2.97	3.05	3.09	V
		Rising edge	3.08	3.15	3.20	
V_{hyst}	Hysteresis voltage	BOR0 threshold	-	40	-	mV
		All BOR and PVD thresholds excepting BOR0	-	100	-	

1. Guaranteed by characterization results.
2. Valid for device version without BOR at power up. Please see option "D" in Ordering information scheme for more details.

6.3.3 Embedded internal reference voltage

The parameters given in *Table 27* are based on characterization results, unless otherwise specified.

Table 26. Embedded internal reference voltage calibration values

Calibration value name	Description	Memory address
VREFINT_CAL	Raw data acquired at temperature of 25 °C V_{DDA}= 3 V	0x1FF8 0078 - 0x1FF8 0079

Table 27. Embedded internal reference voltage(1)

Symbol	Parameter	Conditions	Min	Typ	Max	Unit
$V_{REFINT\ out}$(2)	Internal reference voltage	– 40 °C < T_J < +125 °C	1.202	1.224	1.242	V
$T_{VREFINT}$	Internal reference startup time	-	-	2	3	ms
V_{VREF_MEAS}	V_{DDA} and V_{REF+} voltage during V_{REFINT} factory measure	-	2.99	3	3.01	V
A_{VREF_MEAS}	Accuracy of factory-measured V_{REFINT} value(3)	Including uncertainties due to ADC and V_{DDA}/V_{REF+} values	-	-	±5	mV
T_{Coeff}(4)	Temperature coefficient	–40 °C < T_J < +125 °C	-	25	100	ppm/°C
A_{Coeff}(4)	Long-term stability	1000 hours, T= 25 °C	-	-	1000	ppm
$V_{DDCoeff}$(4)	Voltage coefficient	3.0 V < V_{DDA} < 3.6 V	-	-	2000	ppm/V
$T_{S_vrefint}$(4)(5)	ADC sampling time when reading the internal reference voltage	-	5	10	-	µs
T_{ADC_BUF}(4)	Startup time of reference voltage buffer for ADC	-	-	-	10	µs
I_{BUF_ADC}(4)	Consumption of reference voltage buffer for ADC	-	-	13.5	25	µA
I_{VREF_OUT}(4)	VREF_OUT output current(6)	-	-	-	1	µA
C_{VREF_OUT}(4)	VREF_OUT output load	-	-	-	50	pF

Table 27. Embedded internal reference voltage(1) (continued)

Symbol	Parameter	Conditions	Min	Typ	Max	Unit
I_{LPBUF}(4)	Consumption of reference voltage buffer for VREF_OUT and COMP	-	-	730	1200	nA
V_{REFINT_DIV1}(4)	1/4 reference voltage	-	24	25	26	% V_{REFINT}
V_{REFINT_DIV2}(4)	1/2 reference voltage	-	49	50	51	
V_{REFINT_DIV3}(4)	3/4 reference voltage	-	74	75	76	

1. Refer to *Table 39: Peripheral current consumption in Stop and Standby mode* for the value of the internal reference current consumption (I_{REFINT}).
2. Guaranteed by test in production.
3. The internal V_{REF} value is individually measured in production and stored in dedicated EEPROM bytes.
4. Guaranteed by design.
5. Shortest sampling time can be determined in the application by multiple iterations.
6. To guarantee less than 1% VREF_OUT deviation.

6.3.4 Supply current characteristics

The current consumption is a function of several parameters and factors such as the operating voltage, temperature, I/O pin loading, device software configuration, operating frequencies, I/O pin switching rate, program location in memory and executed binary code. The current consumption is measured as described in *Figure 11: Current consumption measurement scheme*.

All Run-mode current consumption measurements given in this section are performed with a reduced code that gives a consumption equivalent to Dhrystone 2.1 code if not specified otherwise.

The current consumption values are derived from the tests performed under ambient temperature and V_{DD} supply voltage conditions summarized in *Table 24: General operating conditions* unless otherwise specified.

The MCU is placed under the following conditions:

- All I/O pins are configured in analog input mode
- All peripherals are disabled except when explicitly mentioned
- The flash memory access time and prefetch is adjusted depending on fHCLK frequency and voltage range to provide the best CPU performance unless otherwise specified.
- When the peripherals are enabled $f_{APB1} = f_{APB2} = f_{APB}$
- When PLL is ON, the PLL inputs are equal to HSI = 16 MHz (if internal clock is used) or HSE = 16 MHz (if HSE bypass mode is used)
- The HSE user clock applied to OSCI_IN input follows the characteristic specified in *Table 41: High-speed external user clock characteristics*
- For maximum current consumption $V_{DD} = V_{DDA} = 3.6$ V is applied to all supply pins
- For typical current consumption $V_{DD} = V_{DDA} = 3.0$ V is applied to all supply pins if not specified otherwise

The parameters given in *Table 49*, *Table 24* and *Table 25* are derived from tests performed under ambient temperature and V_{DD} supply voltage conditions summarized in *Table 24*.

Table 28. Current consumption in Run mode, code with data processing running from flash

Symbol	Parameter	Conditions		f_{HCLK}	Typ	Max(1)	Unit
I_{DD} (Run from flash)	Supply current in Run mode, code executed from flash	f_{HSE} = f_{HCLK} up to 16 MHz included, f_{HSE} = f_{HCLK}/2 above 16 MHz (PLL ON)(2)	Range 3, V_{CORE}=1.2 V VOS[1:0]=11	1 MHz	165	230	µA
				2 MHz	290	360	
				4 MHz	555	630	
			Range 2, V_{CORE}=1.5 V, VOS[1:0]=10,	4 MHz	0.665	0.74	mA
				8 MHz	1.3	1.4	
				16 MHz	2.6	2.8	
			Range 1, V_{CORE}=1.8 V, VOS[1:0]=01	8 MHz	1.55	1.7	
				16 MHz	3.1	3.4	
				32 MHz	6.3	6.8	
		MSI clock	Range 3, V_{CORE}=1.2 V, VOS[1:0]=11	65 kHz	36.5	110	µA
				524 kHz	99.5	190	
				4.2 MHz	620	700	
		HSI clock	Range 2, V_{CORE}=1.5 V, VOS[1:0]=10,	16 MHz	2.6	2.9	mA
			Range 1, V_{CORE}=1.8 V, VOS[1:0]=01	32 MHz	6.25	7	

1. Guaranteed by characterization results at 125 °C, unless otherwise specified.
2. Oscillator bypassed (HSEBYP = 1 in RCC_CR register).

Table 29. Current consumption in Run mode vs code type, code with data processing running from flash

Symbol	Parameter	Conditions			f_{HCLK}	Typ	Unit
I_{DD} (Run from flash)	Supply current in Run mode, code executed from flash	f_{HSE} = f_{HCLK} up to 16 MHz included, f_{HSE} = f_{HCLK}/2 above 16 MHz (PLL ON)(1)	Range 3, V_{CORE}=1.2 V, VOS[1:0]=11	Dhrystone	4 MHz	555	µA
				CoreMark		585	
				Fibonacci		440	
				while(1)		355	
				while(1), prefetch OFF		353	
			Range 1, V_{CORE}=1.8 V, VOS[1:0]=01	Dhrystone	32 MHz	6.3	mA
				CoreMark		6.3	
				Fibonacci		6.55	
				while(1)		5.4	
				while(1), prefetch OFF		5.2	

1. Oscillator bypassed (HSEBYP = 1 in RCC_CR register).

Figure 12. I_{DD} vs V_{DD}, at T_A= 25/55/85/105 °C, Run mode, code running from flash memory, Range 2, HSE, 1WS

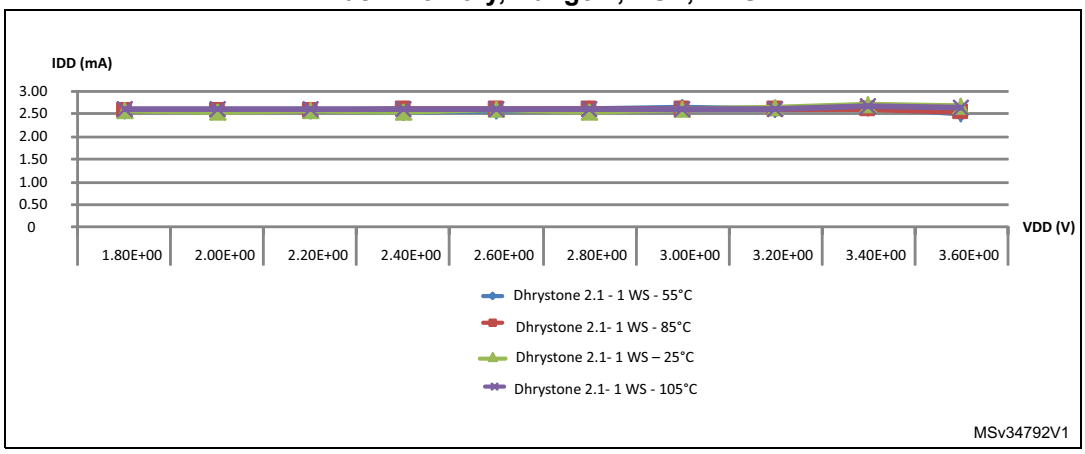

Figure 13. I_{DD} vs V_{DD}, at T_A= 25/55/85/105 °C, Run mode, code running from flash memory, Range 2, HSI16, 1WS

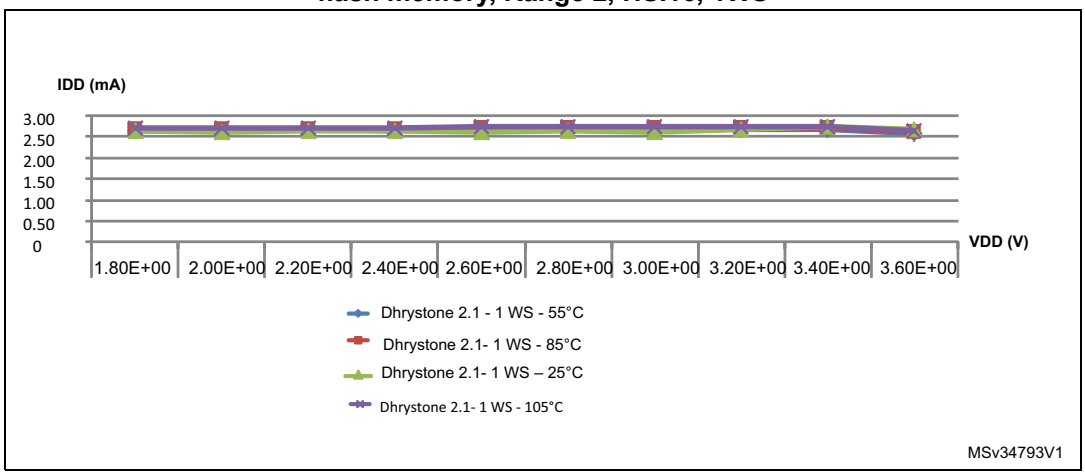

Table 30. Current consumption in Run mode, code with data processing running from RAM

Symbol	Parameter	Conditions		f_{HCLK}	Typ	Max(1)	Unit
I_{DD} (Run from RAM)	Supply current in Run mode, code executed from RAM, flash switched off	f_{HSE} = f_{HCLK} up to 16 MHz included, f_{HSE} = f_{HCLK}/2 above 16 MHz (PLL ON)(2)	Range 3, V_{CORE}=1.2 V, VOS[1:0]=11	1 MHz	135	170	µA
				2 MHz	240	270	
				4 MHz	450	480	
			Range 2, V_{CORE}=1.5 ,V, VOS[1:0]=10	4 MHz	0.52	0.6	mA
				8 MHz	1	1.2	
				16 MHz	2	2.3	
			Range 1, V_{CORE}=1.8 V, VOS[1:0]=01	8 MHz	1.25	1.4	
				16 MHz	2.45	2.8	
				32 MHz	5.1	5.4	
		MSI clock	Range 3, V_{CORE}=1.2 V, VOS[1:0]=11	65 kHz	34.5	75	µA
				524 kHz	83	120	
				4.2 MHz	485	540	
		HSI16 clock source (16 MHz)	Range 2, V_{CORE}=1.5 V, VOS[1:0]=10	16 MHz	2.1	2.3	mA
			Range 1, V_{CORE}=1.8 V, VOS[1:0]=01	32 MHz	5.1	5.6	

1. Guaranteed by characterization results at 125 °C, unless otherwise specified.
2. Oscillator bypassed (HSEBYP = 1 in RCC_CR register).

Table 31. Current consumption in Run mode vs code type, code with data processing running from RAM(1)

Symbol	Parameter	Conditions			f_{HCLK}	Typ	Unit
I_{DD} (Run from RAM)	Supply current in Run mode, code executed from RAM, flash switched off	f_{HSE} = f_{HCLK} up to 16 MHz included, f_{HSE} = f_{HCLK}/2 above 16 MHz (PLL ON)(2)	Range 3, V_{CORE}=1.2 V, VOS[1:0]=11	Dhrystone	4 MHz	450	µA
				CoreMark		575	
				Fibonacci		370	
				while(1)		340	
			Range 1, V_{CORE}=1.8 V, VOS[1:0]=01	Dhrystone	32 MHz	5.1	mA
				CoreMark		6.25	
				Fibonacci		4.4	
				while(1)		4.7	

1. Guaranteed by characterization results, unless otherwise specified.
2. Oscillator bypassed (HSEBYP = 1 in RCC_CR register).

Table 32. Current consumption in Sleep mode

Symbol	Parameter	Conditions		f_{HCLK}	Typ	Max(1)	Unit
I_{DD} (Sleep)	Supply current in Sleep mode, flash OFF	$f_{HSE} = f_{HCLK}$ up to 16 MHz included, $f_{HSE} = f_{HCLK}/2$ above 16 MHz (PLL ON)(2)	Range 3, V_{CORE}=1.2 V, VOS[1:0]=11	1 MHz	43.5	90	µA
				2 MHz	72	120	
				4 MHz	130	180	
			Range 2, V_{CORE}=1.5 V, VOS[1:0]=10	4 MHz	160	210	
				8 MHz	305	370	
				16 MHz	590	710	
			Range 1, V_{CORE}=1.8 V, VOS[1:0]=01	8 MHz	370	430	
				16 MHz	715	860	
				32 MHz	1650	1900	
		MSI clock	Range 3, V_{CORE}=1.2 V, VOS[1:0]=11	65 kHz	18	65	
				524 kHz	31.5	75	
				4.2 MHz	140	210	
		HSI16 clock source (16 MHz)	Range 2, V_{CORE}=1.5 V, VOS[1:0]=10	16 MHz	665	830	
			Range 1, V_{CORE}=1.8 V, VOS[1:0]=01	32 MHz	1750	2100	
	Supply current in Sleep mode, flash ON	$f_{HSE} = f_{HCLK}$ up to 16 MHz included, $f_{HSE} = f_{HCLK}/2$ above 16 MHz (PLL ON)(2)	Range 3, V_{CORE}=1.2 V, VOS[1:0]=11	1 MHz	57.5	130	
				2 MHz	84	170	
				4 MHz	150	280	
			Range 2, $_{CORE}$=1.5 V, VOS[1:0]=10	4 MHz	170	310	
				8 MHz	315	420	
				16 MHz	605	770	
			Range 1, V_{CORE}=1.8 V, VOS[1:0]=01	8 MHz	380	460	
				16 MHz	730	950	
				32 MHz	1650	2400	
		MSI clock	Range 3, V_{CORE}=1.2 V, VOS[1:0]=11	65 kHz	29.5	110	
				524 kHz	44.5	130	
				4.2 MHz	150	270	
		HSI16 clock source (16 MHz)	Range 2, V_{CORE}=1.5 V, VOS[1:0]=10	16 MHz	680	950	
			Range 1, V_{CORE}=1.8 V, VOS[1:0]=01	32 MHz	1750	2100	

1. Guaranteed by characterization results at 125 °C, unless otherwise specified.

2. Oscillator bypassed (HSEBYP = 1 in RCC_CR register).

Table 33. Current consumption in Low-power run mode

Symbol	Parameter	Conditions			Typ	Max(1)	Unit
I_{DD} (LP Run)	Supply current in Low-power run mode	All peripherals OFF, code executed from RAM, flash switched off, V_{DD} from 1.65 to 3.6 V	MSI clock = 65 kHz, f_{HCLK} = 32 kHz	T_A = − 40 to 25°C	8.5	10	µA
				T_A = 85 °C	11.5	48	
				T_A = 105 °C	15.5	53	
				T_A = 125 °C	27.5	130	
			MSI clock= 65 kHz, f_{HCLK} = 65 kHz	T_A =-40 °C to 25 °C	10	15	
				T_A = 85 °C	15.5	50	
				T_A = 105 °C	19.5	54	
				T_A = 125 °C	31.5	130	
			MSI clock= 131 kHz, f_{HCLK} = 131 kHz	T_A = − 40 to 25°C	20	25	
				T_A = 55 °C	23	50	
				T_A = 85 °C	25.5	55	
				T_A = 105 °C	29.5	64	
				T_A = 125 °C	40	140	
		All peripherals OFF, code executed from flash, V_{DD} from 1.65 V to 3.6 V	MSI clock= 65 kHz, f_{HCLK} = 32 kHz	T_A = − 40 to 25°C	22	28	
				T_A = 85 °C	26	68	
				T_A = 105 °C	31	75	
				T_A = 125 °C	44	95	
			MSI clock = 65 kHz, f_{HCLK} = 65 kHz	T_A = − 40 to 25°C	27.5	33	
				T_A = 85 °C	31.5	73	
				T_A = 105 °C	36.5	80	
				T_A = 125 °C	49	100	
			MSI clock = 131 kHz, f_{HCLK} = 131 kHz	T_A = − 40 to 25°C	39	46	
				T_A = 55 °C	41	80	
				T_A = 85 °C	44	86	
				T_A = 105 °C	49.5	100	
				T_A = 125 °C	60	120	

1. Guaranteed by characterization results at 125 °C, unless otherwise specified.

Figure 14. I_{DD} vs V_{DD}, at T_A= 25/55/ 85/105/125 °C, Low-power run mode, code running from RAM, Range 3, MSI (Range 0) at 64 KHz, 0 WS

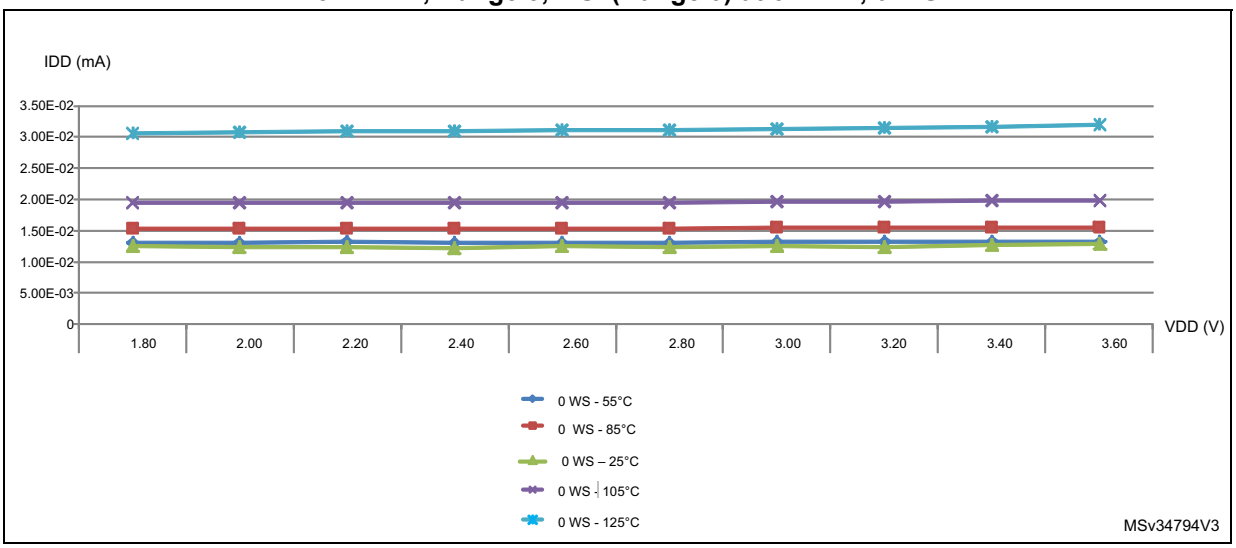

Table 34. Current consumption in Low-power sleep mode

Symbol	Parameter	Conditions			Typ	Max(1)	Unit
I_{DD} (LP Sleep)	Supply current in Low-power sleep mode	All peripherals OFF, V_{DD} from 1.65 to 3.6 V	MSI clock = 65 kHz, f_{HCLK} = 32 kHz, flash OFF	T_A = − 40 to 25°C	4.7(2)	-	µA
			MSI clock = 65 kHz, f_{HCLK} = 32 kHz, flash ON	T_A = − 40 to 25°C	17	23	
				T_A = 85 °C	19.5	63	
				T_A = 105 °C	23	69	
				T_A = 125 °C	32.5	90	
			MSI clock =65 kHz, f_{HCLK} = 65 kHz, flash ON	T_A = − 40 to 25°C	17	23	
				T_A = 85 °C	20	63	
				T_A = 105 °C	23.5	69	
				T_A = 125 °C	32.5	90	
			MSI clock = 131 kHz, f_{HCLK} = 131 kHz, flash ON	T_A = − 40 to 25°C	19.5	36	
				T_A = 55 °C	20.5	64	
				T_A = 85 °C	22.5	66	
				T_A = 105 °C	26	72	
				T_A = 125 °C	35	95	

1. Guaranteed by characterization results at 125 °C, unless otherwise specified.
2. As the CPU is in Sleep mode, the difference between the current consumption with flash ON and OFF (nearly 12 µA) is the same whatever the clock frequency.

Table 35. Typical and maximum current consumptions in Stop mode

Symbol	Parameter	Conditions	Typ	Max(1)	Unit
I_{DD} (Stop)	Supply current in Stop mode	T_A = − 40 to 25°C	0.41	1	µA
		T_A = 55°C	0.63	2.1	
		T_A= 85°C	1.7	4.5	
		T_A = 105°C	4	9.6	
		T_A = 125°C	11	24(2)	

1. Guaranteed by characterization results at 125 °C, unless otherwise specified.
2. Guaranteed by test in production.

Figure 15. I_{DD} vs V_{DD}, at T_A= 25/55/ 85/105/125 °C, Stop mode with RTC enabled and running on LSE Low drive

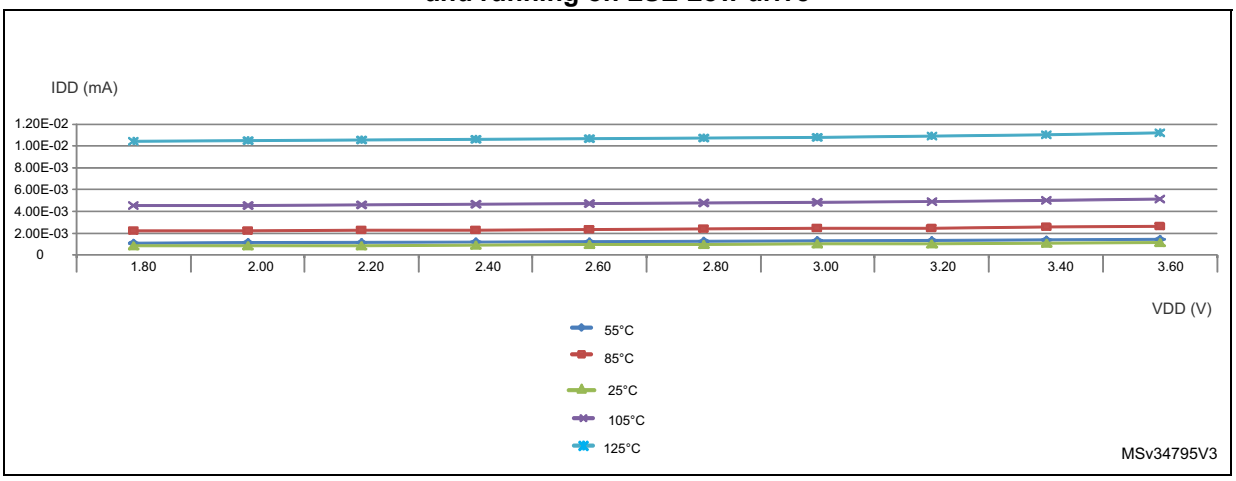

Figure 16. I_{DD} vs V_{DD}, at T_A= 25/55/85/105/125 °C, Stop mode with RTC disabled, all clocks OFF

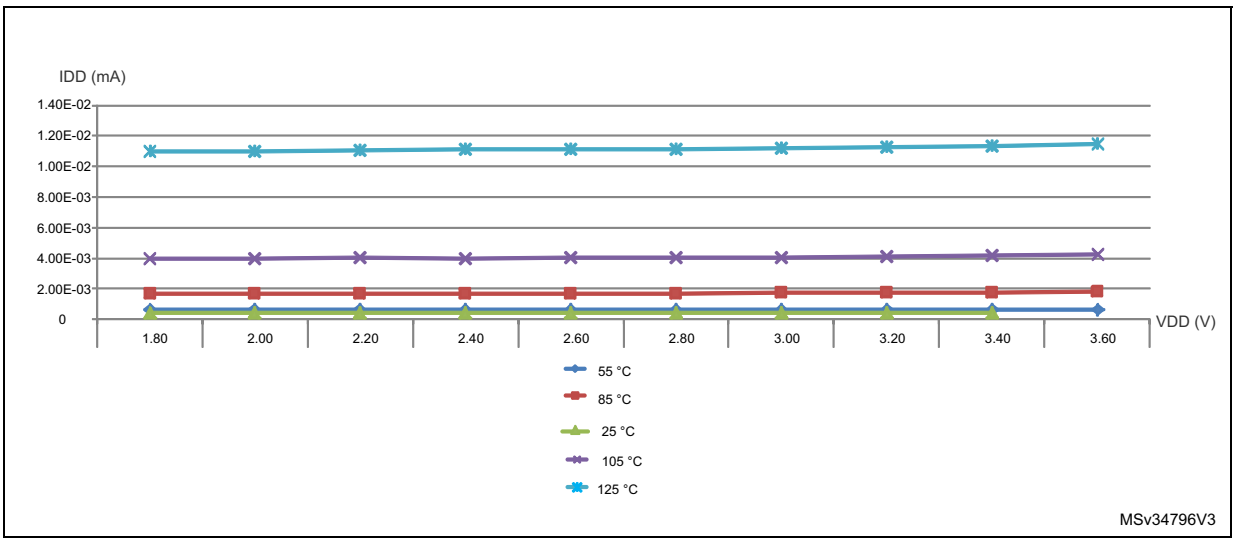

Table 36. Typical and maximum current consumptions in Standby mode

Symbol	Parameter	Conditions		Typ	Max(1)	Unit
I_{DD} (Standby)	Supply current in Standby mode	Independent watchdog and LSI enabled	T_A = − 40 to 25°C	1.3	1.7	µA
			T_A = 55 °C	-	2.9	
			T_A= 85 °C	-	3.3	
			T_A = 105 °C	-	4.1	
			T_A = 125 °C	-	8.5	
		Independent watchdog and LSI OFF	T_A = − 40 to 25°C	0.29	0.6	
			T_A = 55 °C	0.32	0.9	
			T_A = 85 °C	0.5	2.3	
			T_A = 105 °C	0.94	3	
			T_A = 125 °C	2.6	7	

1. Guaranteed by characterization results at 125 °C, unless otherwise specified

Table 37. Average current consumption during wake-up

Symbol	parameter	System frequency	Current consumption during wake-up	Unit
I_{DD} (Wake-up from Stop)	Supply current during Wake-up from Stop mode	HSI	1	mA
		HSI/4	0,7	
		MSI clock = 4,2 MHz	0,7	
		MSI clock = 1,05 MHz	0,4	
		MSI clock = 65 KHz	0,1	
I_{DD} (Reset)	Reset pin pulled down	-	0,21	
I_{DD} (Power-up)	BOR ON	-	0,23	
I_{DD} (Wake-up from StandBy)	With Fast wake-up set	MSI clock = 2,1 MHz	0,5	
	With Fast wake-up disabled	MSI clock = 2,1 MHz	0,12	

On-chip peripheral current consumption

The current consumption of the on-chip peripherals is given in the following tables. The MCU is placed under the following conditions:

- all I/O pins are in input mode with a static value at V_{DD} or V_{SS} (no load)
- all peripherals are disabled unless otherwise mentioned
- the given value is calculated by measuring the current consumption
  - with all peripherals clocked OFF
  - with only one peripheral clocked on

Table 38. Peripheral current consumption in Run or Sleep mode(1)

Peripheral		Typical consumption, V_{DD} = 3.0 V, T_A = 25 °C				Unit
		Range 1, V_{CORE}=1.8 V VOS[1:0] = 01	Range 2, V_{CORE}=1.5 V VOS[1:0] = 10	Range 3, V_{CORE}=1.2 V VOS[1:0] = 11	Low-power sleep and run	
APB1	CRS	2.5	2	2	2	µA/MHz (f_{HCLK})
	DAC1	4	3.5	3	2.5	
	I2C1	11	9.5	7.5	9	
	I2C2	4	3.5	3	2.5	
	LCD1	4	3.5	3	2.5	
	LPTIM1	10	8.5	6.5	8	
	LPUART1	8	6.5	5.5	6	
	SPI2	9	4.5	3.5	4	
	USB	8.5	4.5	4	4.5	
	USART2	14.5	12	9.5	11	
	TIM2	10.5	8.5	7	9	
	TIM6	3.5	3	2.5	2	
	WWDG	3	2	2	2	
APB2	ADC1(2)	5.5	5	3.5	4	µA/MHz (f_{HCLK})
	SPI1	4	3	3	2.5	
	USART1	14.5	11.5	9.5	12	
	TIM21	7.5	6	5	5.5	
	TIM22	7	6	5	6	
	FIREWALL	1.5	1	1	0.5	
	DBGMCU	1.5	1	1	0.5	
	SYSCFG	2.5	2	2	1.5	

Table 38. Peripheral current consumption in Run or Sleep mode(1) (continued)

Peripheral		Typical consumption, V_{DD} = 3.0 V, T_A = 25 °C				Unit
		Range 1, V_{CORE}=1.8 V VOS[1:0] = 01	Range 2, V_{CORE}=1.5 V VOS[1:0] = 10	Range 3, V_{CORE}=1.2 V VOS[1:0] = 11	Low-power sleep and run	
Cortex-M0+ core I/O port	GPIOA	3.5	3	2.5	2.5	µA/MHz (f_{HCLK})
	GPIOB	3.5	2.5	2	2.5	
	GPIOC	8.5	6.5	5.5	7	
	GPIOD	1	0.5	0.5	0.5	
	GPIOH	1.5	1	1	0.5	
AHB	CRC	1.5	1	1	1	µA/MHz (f_{HCLK})
	FLASH	0(3)	0(3)	0(3)	0(3)	
	DMA1	10	8	6.5	8.5	
	RNG	5.5	1	0.5	0.5	
	TSC	3	2.5	2	3	
All enabled		283	225	222.5	212.5	µA/MHz (f_{HCLK})
PWR		2.5	2	2	1	µA/MHz (f_{HCLK})

1. Data based on differential I_{DD} measurement between all peripherals OFF an one peripheral with clock enabled, in the following conditions: f_{HCLK} = 32 MHz (range 1), f_{HCLK} = 16 MHz (range 2), f_{HCLK} = 4 MHz (range 3), f_{HCLK} = 64kHz (Low-power run/sleep), $f_{APB1} = f_{HCLK}$, $f_{APB2} = f_{HCLK}$, default prescaler value for each peripheral. The CPU is in Sleep mode in both cases. No I/O pins toggling. Not tested in production.
2. HSI oscillator is OFF for this measure.
3. Current consumption is negligible and close to 0 µA.

Table 39. Peripheral current consumption in Stop and Standby mode(1)

Symbol	Peripheral	Typical consumption, T_A = 25 °C		Unit
		V_{DD}=1.8 V	V_{DD}=3.0 V	
$I_{DD(PVD / BOR)}$	-	0.7	1.2	µA
I_{REFINT}	-	-	1.4	
-	LSE Low drive(2)	0,1	0,1	
-	LPTIM1, Input 100 Hz	0,01	0,01	
-	LPTIM1, Input 1 MHz	6	6	
-	LPUART1	0,2	0,2	
-	RTC	0,3	0,48	
-	LCD1 (static duty)	0,15	0,15	µA
-	LCD1 (1/8 duty)	1,6	2,6	

1. LPTIM peripheral cannot operate in Standby mode.
2. LSE Low drive consumption is the difference between an external clock on OSC32_IN and a quartz between OSC32_IN and OSC32_OUT.-

6.3.5 Wake-up time from low-power mode

The wake-up times given in the following table are measured with the MSI or HSI16 RC oscillator. The clock source used to wake up the device depends on the current operating mode:

- Sleep mode: the clock source is the clock that was set before entering Sleep mode
- Stop mode: the clock source is either the MSI oscillator in the range configured before entering Stop mode, the HSI16 or HSI16/4.
- Standby mode: the clock source is the MSI oscillator running at 2.1 MHz

All timings are derived from tests performed under ambient temperature and V_{DD} supply voltage conditions summarized in *Table 24*.

Table 40. Low-power mode wake-up timings

Symbol	Parameter	Conditions	Typ	Max	Unit
$t_{WUSLEEP}$	Wake-up from Sleep mode	f_{HCLK} = 32 MHz	7	8	Number of clock cycles
$t_{WUSLEEP_LP}$	Wake-up from Low-power sleep mode, f_{HCLK} = 262 kHz	f_{HCLK} = 262 kHz flash memory enabled	7	8	
		f_{HCLK} = 262 kHz flash memory switched OFF	9	10	
t_{WUSTOP}	Wake-up from Stop mode, regulator in Run mode	$f_{HCLK} = f_{MSI}$ = 4.2 MHz	5.0	8	µs
		$f_{HCLK} = f_{HSI}$ = 16 MHz	4.9	7	
		$f_{HCLK} = f_{HSI}/4$ = 4 MHz	8.0	11	
	Wake-up from Stop mode, regulator in low-power mode	$f_{HCLK} = f_{MSI}$ = 4.2 MHz Voltage range 1	5.0	8	
		$f_{HCLK} = f_{MSI}$ = 4.2 MHz Voltage range 2	5.0	8	
		$f_{HCLK} = f_{MSI}$ = 4.2 MHz Voltage range 3	5.0	8	
		$f_{HCLK} = f_{MSI}$ = 2.1 MHz	7.3	13	
		$f_{HCLK} = f_{MSI}$ = 1.05 MHz	13	23	
		$f_{HCLK} = f_{MSI}$ = 524 kHz	28	38	
		$f_{HCLK} = f_{MSI}$ = 262 kHz	51	65	
		$f_{HCLK} = f_{MSI}$ = 131 kHz	100	120	
		f_{HCLK} = MSI = 65 kHz	190	260	
		$f_{HCLK} = f_{HSI}$ = 16 MHz	4.9	7	
		$f_{HCLK} = f_{HSI}/4$ = 4 MHz	8.0	11	
	Wake-up from Stop mode, regulator in low-power mode, code running from RAM	$f_{HCLK} = f_{HSI}$ = 16 MHz	4.9	7	
		$f_{HCLK} = f_{HSI}/4$ = 4 MHz	7.9	10	
		$f_{HCLK} = f_{MSI}$ = 4.2 MHz	4.7	8	
$t_{WUSTDBY}$	Wake-up from Standby mode, FWU bit = 1	f_{HCLK} = MSI = 2.1 MHz	65	130	µs
	Wake-up from Standby mode, FWU bit = 0	f_{HCLK} = MSI = 2.1 MHz	2.2	3	ms
$t_{WUUSART}$ $t_{WULPUART}$	Wake-up time required to calculate the maximum USART/LPUART baudrate while waking up from Stop mode using the USART/LPUART	Stop mode, regulator in Run mode	t_{WUSTOP}		µs

6.3.6 External clock source characteristics

High-speed external user clock generated from an external source

In bypass mode the HSE oscillator is switched off and the input pin is a standard GPIO.The external clock signal has to respect the I/O characteristics in *Section 6.3.12*. However, the recommended clock input waveform is shown in *Figure 17*.

Table 41. High-speed external user clock characteristics(1)

Symbol	Parameter	Conditions	Min	Typ	Max	Unit
f_{HSE_ext}	User external clock source frequency	CSS is ON or PLL is used	1	8	32	MHz
		CSS is OFF, PLL not used	0	8	32	MHz
V_{HSEH}	OSC_IN input pin high level voltage	-	-	V_{DD}	-	V
V_{HSEL}	OSC_IN input pin low level voltage		-	V_{SS}	-	
$t_{w(HSE)}$ $t_{w(HSE)}$	OSC_IN high or low time		12	-	-	ns
$t_{r(HSE)}$ $t_{f(HSE)}$	OSC_IN rise or fall time		-	-	20	
$C_{in(HSE)}$	OSC_IN input capacitance		-	2.6	-	pF
$DuCy_{(HSE)}$	Duty cycle		45	-	55	%
I_L	OSC_IN Input leakage current	$V_{SS} \leq V_{IN} \leq V_{DD}$	-	-	±1	µA

1. Guaranteed by design.

Figure 17. High-speed external clock source AC timing diagram

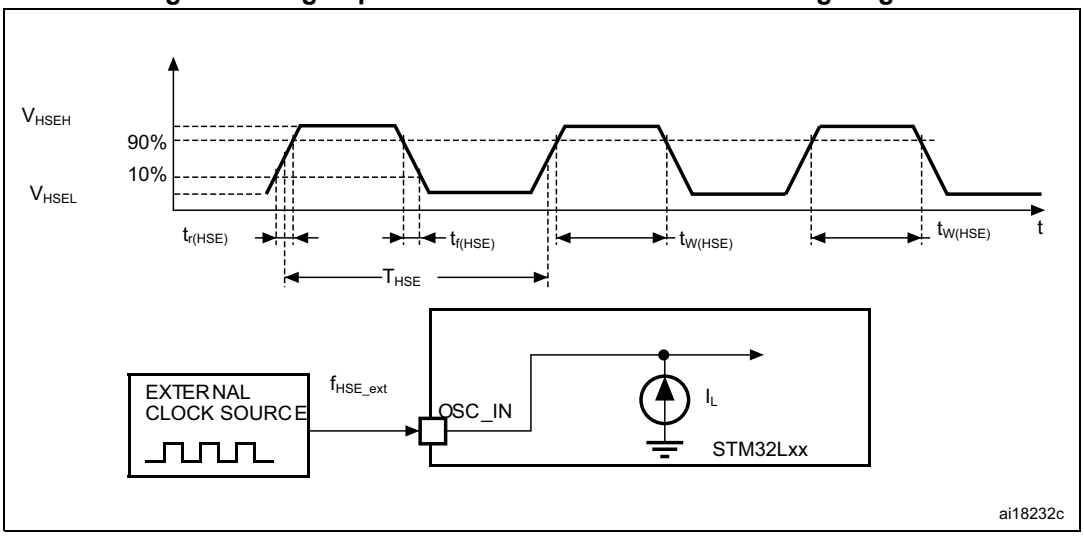

Low-speed external user clock generated from an external source

The characteristics given in the following table result from tests performed using a low-speed external clock source, and under ambient temperature and supply voltage conditions summarized in *Table 24*.

Table 42. Low-speed external user clock characteristics(1)

Symbol	Parameter	Conditions	Min	Typ	Max	Unit
f_{LSE_ext}	User external clock source frequency	-	1	32.768	1000	kHz
V_{LSEH}	OSC32_IN input pin high level voltage		-	V_{DD}	-	V
V_{LSEL}	OSC32_IN input pin low level voltage		-	V_{SS}	-	
$t_{w(LSE)}$ $t_{w(LSE)}$	OSC32_IN high or low time		465	-	-	ns
$t_{r(LSE)}$ $t_{f(LSE)}$	OSC32_IN rise or fall time		-	-	10	
$C_{IN(LSE)}$	OSC32_IN input capacitance	-	-	0.6	-	pF
$DuCy_{(LSE)}$	Duty cycle	-	45	-	55	%
I_L	OSC32_IN Input leakage current	$V_{SS} \leq V_{IN} \leq V_{DD}$	-	-	±1	µA

1. Guaranteed by design, not tested in production

Figure 18. Low-speed external clock source AC timing diagram

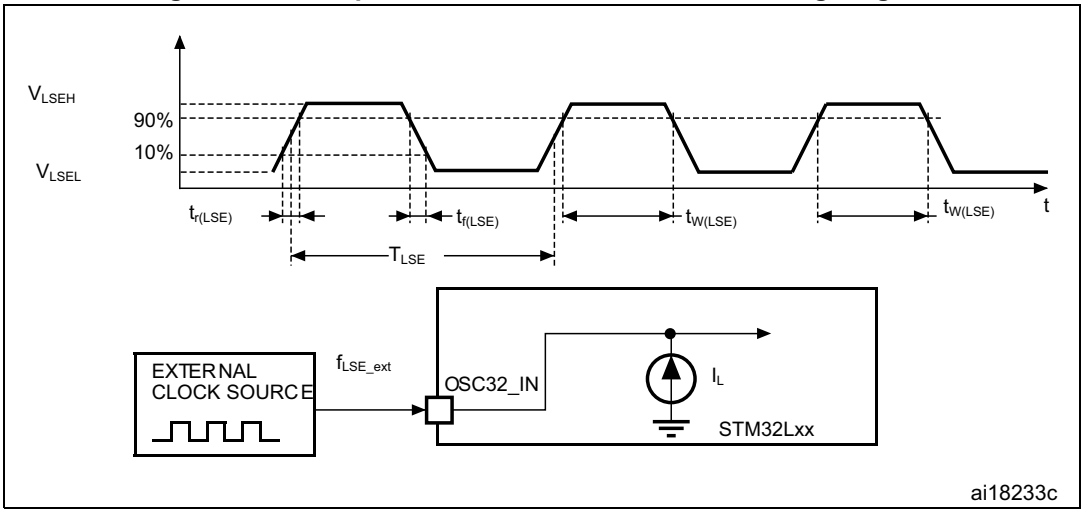

High-speed external clock generated from a crystal/ceramic resonator

The high-speed external (HSE) clock can be supplied with a 1 to 25 MHz crystal/ceramic resonator oscillator. All the information given in this paragraph are based on characterization results obtained with typical external components specified in *Table 43*. In the application, the resonator and the load capacitors have to be placed as close as possible to the oscillator pins in order to minimize output distortion and startup stabilization time. Refer to the crystal resonator manufacturer for more details on the resonator characteristics (frequency, package, accuracy).

Table 43. HSE oscillator characteristics(1)

Symbol	Parameter	Conditions	Min	Typ	Max	Unit
f_{OSC_IN}	Oscillator frequency	-	1		25	MHz
R_F	Feedback resistor	-	-	200	-	kΩ
G_m	Maximum critical crystal transconductance	Startup	-	-	700	µA /V
$t_{SU(HSE)}$ (2)	Startup time	V_{DD} is stabilized	-	2	-	ms

1. Guaranteed by design.
2. Guaranteed by characterization results. $t_{SU(HSE)}$ is the startup time measured from the moment it is enabled (by software) to a stabilized 8 MHz oscillation is reached. This value is measured for a standard crystal resonator and it can vary significantly with the crystal manufacturer.

For C_{L1} and C_{L2}, it is recommended to use high-quality external ceramic capacitors in the 5 pF to 25 pF range (typ.), designed for high-frequency applications, and selected to match the requirements of the crystal or resonator (see *Figure 19*). C_{L1} and C_{L2} are usually the same size. The crystal manufacturer typically specifies a load capacitance which is the series combination of C_{L1} and C_{L2}. PCB and MCU pin capacitance must be included (10 pF can be used as a rough estimate of the combined pin and board capacitance) when sizing C_{L1} and C_{L2}. Refer to the application note AN2867 “Oscillator design guide for ST microcontrollers” available from the ST website *www.st.com*.

Figure 19. HSE oscillator circuit diagram

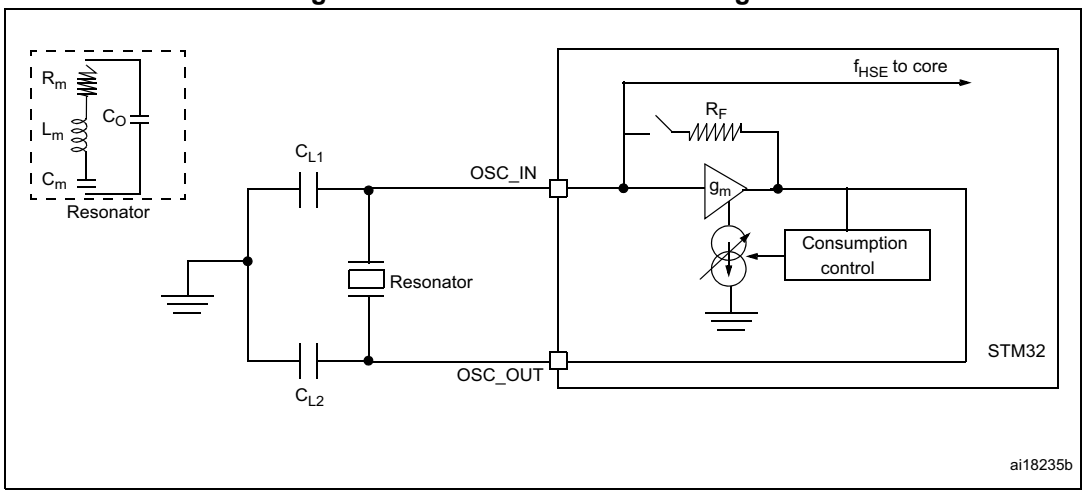

Low-speed external clock generated from a crystal/ceramic resonator

The low-speed external (LSE) clock can be supplied with a 32.768 kHz crystal/ceramic resonator oscillator. All the information given in this paragraph are based on characterization results obtained with typical external components specified in *Table 44*. In the application, the resonator and the load capacitors have to be placed as close as possible to the oscillator pins in order to minimize output distortion and startup stabilization time. Refer to the crystal resonator manufacturer for more details on the resonator characteristics (frequency, package, accuracy).

Table 44. LSE oscillator characteristics(1)

Symbol	Parameter	Conditions(2)	Min(2)	Typ	Max	Unit
f_{LSE}	LSE oscillator frequency		-	32.768	-	kHz
G_m	Maximum critical crystal transconductance	LSEDRV[1:0]=00 lower driving capability	-	-	0.5	µA/V
		LSEDRV[1:0]= 01 medium low driving capability	-	-	0.75	
		LSEDRV[1:0] = 10 medium high driving capability	-	-	1.7	
		LSEDRV[1:0]=11 higher driving capability	-	-	2.7	
$t_{SU(LSE)}$(3)	Startup time	V_{DD} is stabilized	-	2	-	s

1. Guaranteed by design.
2. Refer to the note and caution paragraphs below the table, and to the application note AN2867 “Oscillator design guide for ST microcontrollers”.
3. Guaranteed by characterization results. $t_{SU(LSE)}$ is the startup time measured from the moment it is enabled (by software) to a stabilized 32.768 kHz oscillation is reached. This value is measured for a standard crystal resonator and it can vary significantly with the crystal manufacturer. To increase speed, address a lower-drive quartz with a high- driver mode.

Note: For information on selecting the crystal, refer to the application note AN2867 “Oscillator design guide for ST microcontrollers” available from the ST website www.st.com.

Figure 20. Typical application with a 32.768 kHz crystal

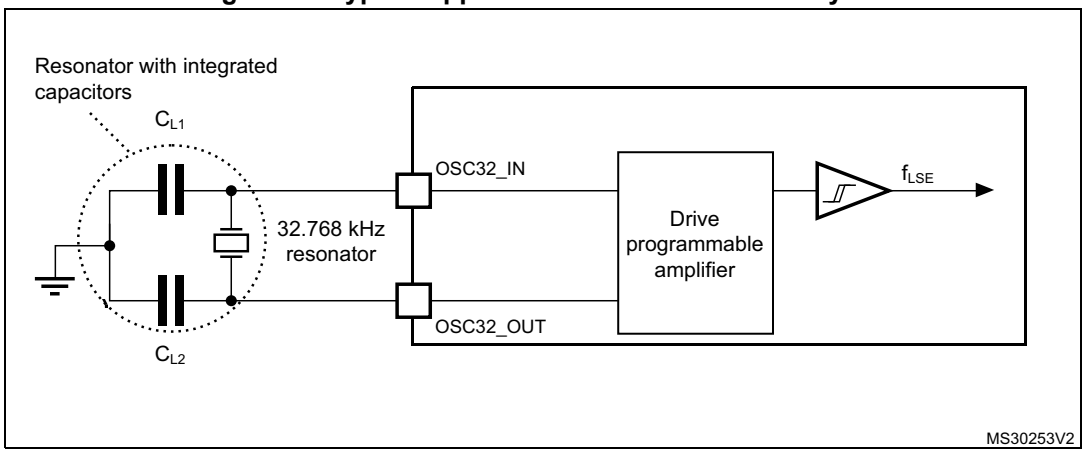

Note: An external resistor is not required between OSC32_IN and OSC32_OUT and it is forbidden to add one.

6.3.7 Internal clock source characteristics

The parameters given in *Table 45* are derived from tests performed under ambient temperature and V_{DD} supply voltage conditions summarized in *Table 24*.

High-speed internal 16 MHz (HSI16) RC oscillator

Table 45. 16 MHz HSI16 oscillator characteristics

Symbol	Parameter	Conditions	Min	Typ	Max	Unit
f_{HSI16}	Frequency	V_{DD} = 3.0 V	-	16	-	MHz
$TRIM^{(1)(2)}$	HSI16 user-trimmed resolution	Trimming code is not a multiple of 16	-	±0.4	0.7	%
		Trimming code is a multiple of 16	-	-	±1.5	%
$ACC_{HSI16}^{(2)}$	Accuracy of the factory-calibrated HSI16 oscillator	V_{DDA} = 3.0 V, T_A = 25 °C	-1(3)	-	1(3)	%
		V_{DDA} = 3.0 V, T_A = 0 to 55 °C	-1.5	-	1.5	%
		V_{DDA} = 3.0 V, T_A = -10 to 70 °C	-2	-	2	%
		V_{DDA} = 3.0 V, T_A = -10 to 85 °C	-2.5	-	2	%
		V_{DDA} = 3.0 V, T_A = -10 to 105 °C	-4	-	2	%
		V_{DDA} = 1.65 V to 3.6 V T_A = − 40 to 125 °C	-5.45	-	3.25	%
$t_{SU(HSI16)}^{(2)}$	HSI16 oscillator startup time	-	-	3.7	6	µs
$I_{DD(HSI16)}^{(2)}$	HSI16 oscillator power consumption	-	-	100	140	µA

1. The trimming step differs depending on the trimming code. It is usually negative on the codes which are multiples of 16 (0x00, 0x10, 0x20, 0x30...0xE0).
2. Guaranteed by characterization results.
3. Guaranteed by test in production.

Figure 21. HSI16 minimum and maximum value versus temperature

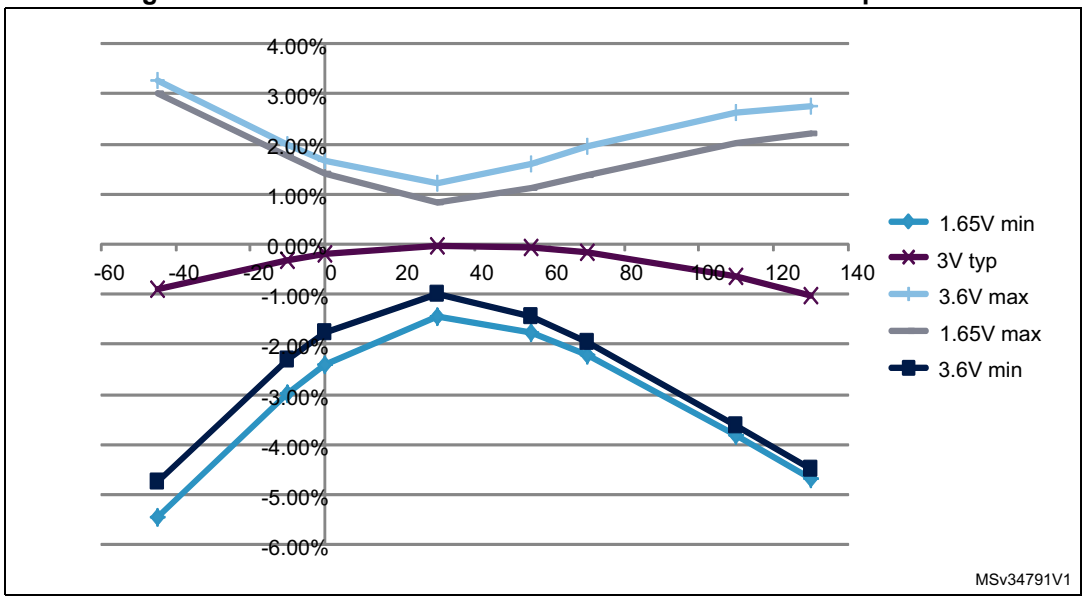

High-speed internal 48 MHz (HSI48) RC oscillator

Table 46. HSI48 oscillator characteristics(1)

Symbol	Parameter	Conditions	Min	Typ	Max	Unit
f_{HSI48}	Frequency		-	48	-	MHz
TRIM	HSI48 user-trimming step		0.09(2)	0.14	0.2(2)	%
$DuCy_{(HSI48)}$	Duty cycle		45(2)	-	55(2)	%
ACC_{HSI48}	Accuracy of the HSI48 oscillator (factory calibrated before CRS calibration)	T_A = 25 °C	-4(3)	-	4(3)	%
$t_{su(HSI48)}$	HSI48 oscillator startup time		-	-	6(2)	µs
$I_{DDA(HSI48)}$	HSI48 oscillator power consumption		-	330	380(2)	µA

1. V_{DDA} = 3.3 V, T_A = –40 to 125 °C unless otherwise specified.
2. Guaranteed by design.
3. Guaranteed by characterization results.

Low-speed internal (LSI) RC oscillator

Table 47. LSI oscillator characteristics

Symbol	Parameter	Min	Typ	Max	Unit
f_{LSI}(1)	LSI frequency	26	38	56	kHz
D_{LSI}(2)	LSI oscillator frequency drift $0°C \le T_A \le 85°C$	-10	-	4	%
$t_{su(LSI)}$(3)	LSI oscillator startup time	-	-	200	µs
$I_{DD(LSI)}$(3)	LSI oscillator power consumption	-	400	510	nA

1. Guaranteed by test in production.
2. This is a deviation for an individual part, once the initial frequency has been measured.
3. Guaranteed by design.

Multi-speed internal (MSI) RC oscillator

Table 48. MSI oscillator characteristics

Symbol	Parameter	Condition	Typ	Max	Unit
f_{MSI}	Frequency after factory calibration, done at V_{DD}= 3.3 V and T_A = 25 °C	MSI range 0	65.5	-	kHz
		MSI range 1	131	-	
		MSI range 2	262	-	
		MSI range 3	524	-	
		MSI range 4	1.05	-	MHz
		MSI range 5	2.1	-	
		MSI range 6	4.2	-	

Table 48. MSI oscillator characteristics (continued)

Symbol	Parameter	Condition	Typ	Max	Unit
ACC_{MSI}	Frequency error after factory calibration	-	±0.5	-	%
$D_{TEMP(MSI)}$(1)	MSI oscillator frequency drift 0 °C ≤T_A ≤85 °C	-	±3	-	%
	MSI oscillator frequency drift V_{DD} = 3.3 V, − 40 °C ≤T_A ≤110 °C	MSI range 0	− 8.9	+7.0	
		MSI range 1	− 7.1	+5.0	
		MSI range 2	− 6.4	+4.0	
		MSI range 3	− 6.2	+3.0	
		MSI range 4	− 5.2	+3.0	
		MSI range 5	− 4.8	+2.0	
		MSI range 6	− 4.7	+2.0	
$D_{VOLT(MSI)}$(1)	MSI oscillator frequency drift 1.65 V ≤V_{DD} ≤3.6 V, T_A = 25 °C	-	-	2.5	%/V
$I_{DD(MSI)}$(2)	MSI oscillator power consumption	MSI range 0	0.75	-	µA
		MSI range 1	1	-	
		MSI range 2	1.5	-	
		MSI range 3	2.5	-	
		MSI range 4	4.5	-	
		MSI range 5	8	-	
		MSI range 6	15	-	
$t_{SU(MSI)}$	MSI oscillator startup time	MSI range 0	30	-	µs
		MSI range 1	20	-	
		MSI range 2	15	-	
		MSI range 3	10	-	
		MSI range 4	6	-	
		MSI range 5	5	-	
		MSI range 6, Voltage range 1 and 2	3.5	-	
		MSI range 6, Voltage range 3	5	-	

Table 48. MSI oscillator characteristics (continued)

Symbol	Parameter	Condition	Typ	Max	Unit
$t_{STAB(MSI)}$(2)	MSI oscillator stabilization time	MSI range 0	-	40	µs
		MSI range 1	-	20	
		MSI range 2	-	10	
		MSI range 3	-	4	
		MSI range 4	-	2.5	
		MSI range 5	-	2	
		MSI range 6, Voltage range 1 and 2	-	2	
		MSI range 3, Voltage range 3	-	3	
$f_{OVER(MSI)}$	MSI oscillator frequency overshoot	Any range to range 5	-	4	MHz
		Any range to range 6	-	6	

1. This is a deviation for an individual part, once the initial frequency has been measured.
2. Guaranteed by characterization results.

6.3.8 PLL characteristics

The parameters given in *Table 49* are derived from tests performed under ambient temperature and V_{DD} supply voltage conditions summarized in *Table 24*.

Table 49. PLL characteristics

Symbol	Parameter	Value			Unit
		Min	Typ	Max(1)	
f_{PLL_IN}	PLL input clock(2)	2	-	24	MHz
	PLL input clock duty cycle	45	-	55	%
f_{PLL_OUT}	PLL output clock	2	-	32	MHz
t_{LOCK}	PLL input = 16 MHz PLL VCO = 96 MHz	-	115	160	µs
Jitter	Cycle-to-cycle jitter	-		±600	ps
I_{DDA}(PLL)	Current consumption on V_{DDA}	-	220	450	µA
I_{DD}(PLL)	Current consumption on V_{DD}	-	120	150	

1. Guaranteed by characterization results.
2. Take care of using the appropriate multiplier factors so as to have PLL input clock values compatible with the range defined by f_{PLL_OUT}.

6.3.9 Memory characteristics

RAM memory

Table 50. RAM and hardware registers

Symbol	Parameter	Conditions	Min	Typ	Max	Unit
VRM	Data retention mode(1)	Stop mode (or reset)	1.65	-	-	V

1. Minimum supply voltage without losing data stored in RAM (in Stop mode or under Reset) or in hardware registers (only in Stop mode).

Flash memory and data EEPROM

Table 51. Flash memory and data EEPROM characteristics

Symbol	Parameter	Conditions	Min	Typ	Max(1)	Unit
V_{DD}	Operating voltage Read / Write / Erase	-	1.65	-	3.6	V
t_{prog}	Programming time for word or half-page	Erasing	-	3.28	3.94	ms
		Programming	-	3.28	3.94	
I_{DD}	Average current during the whole programming / erase operation	T_A = 25 °C, V_{DD} = 3.6 V	-	500	700	µA
	Maximum current (peak) during the whole programming / erase operation		-	1.5	2.5	mA

1. Guaranteed by design.

Table 52. Flash memory and data EEPROM endurance and retention

Symbol	Parameter	Conditions	Value	Unit
			Min(1)	
N_{CYC}(2)	Cycling (erase / write) Program memory	T_A = -40°C to 105 °C	10	kcycles
	Cycling (erase / write) EEPROM data memory		100	
	Cycling (erase / write) Program memory	T_A = -40°C to 125 °C	0.2	
	Cycling (erase / write) EEPROM data memory		2	

Table 52. Flash memory and data EEPROM endurance and retention (continued)

Symbol	Parameter	Conditions	Value	Unit
			Min(1)	
t_{RET}(2)	Data retention (program memory) after 10 kcycles at T_A = 85 °C	T_{RET} = +85 °C	30	years
	Data retention (EEPROM data memory) after 100 kcycles at T_A = 85 °C		30	
	Data retention (program memory) after 10 kcycles at T_A = 105 °C	T_{RET} = +105 °C	10	
	Data retention (EEPROM data memory) after 100 kcycles at T_A = 105 °C			
	Data retention (program memory) after 200 cycles at T_A = 125 °C	T_{RET} = +125 °C		
	Data retention (EEPROM data memory) after 2 kcycles at T_A = 125 °C			

1. Guaranteed by characterization results.
2. Characterization is done according to JEDEC JESD22-A117.

6.3.10 EMC characteristics

Susceptibility tests are performed on a sample basis during device characterization.

Functional EMS (electromagnetic susceptibility)

While a simple application is executed on the device (toggling 2 LEDs through I/O ports). the device is stressed by two electromagnetic events until a failure occurs. The failure is indicated by the LEDs:

- **Electrostatic discharge (ESD)** (positive and negative) is applied to all device pins until a functional disturbance occurs. This test is compliant with the IEC 61000-4-2 standard.
- **FTB**: A Burst of Fast Transient voltage (positive and negative) is applied to V_{DD} and V_{SS} through a 100 pF capacitor, until a functional disturbance occurs. This test is compliant with the IEC 61000-4-4 standard.

A device reset allows normal operations to be resumed.

The test results are given in *Table 53*. They are based on the EMS levels and classes defined in the application note AN1709 “EMC design guide for STM8, STM32 and legacy MCUs”.

Table 53. EMS characteristics

Symbol	Parameter	Conditions	Level/ Class
V_{FESD}	Voltage limits to be applied on any I/O pin to induce a functional disturbance	V_{DD} = 3.3 V, LQFP64, T_A = +25 °C, f_{HCLK} = 32 MHz conforms to IEC 61000-4-2	3B
V_{EFTB}	Fast transient voltage burst limits to be applied through 100 pF on V_{DD} and V_{SS} pins to induce a functional disturbance	V_{DD} = 3.3 V, LQFP64, T_A = +25 °C, f_{HCLK} = 32 MHz conforms to IEC 61000-4-4	4A

Designing hardened software to avoid noise problems

EMC characterization and optimization are performed at component level with a typical application environment and simplified MCU software. It should be noted that good EMC performance is highly dependent on the user application and the software in particular.

Therefore it is recommended that the user applies EMC software optimization and prequalification tests in relation with the EMC level requested for his application.

Software recommendations

The software flowchart must include the management of runaway conditions such as:

- Corrupted program counter
- Unexpected reset
- Critical data corruption (control registers...)

Prequalification trials

Most of the common failures (unexpected reset and program counter corruption) can be reproduced by manually forcing a low state on the NRST pin or the oscillator pins for 1 second.

To complete these trials, ESD stress can be applied directly on the device, over the range of specification values. When unexpected behavior is detected, the software can be hardened to prevent unrecoverable errors occurring (see application note AN1015).

Electromagnetic Interference (EMI)

The electromagnetic field emitted by the device are monitored while a simple application is executed (toggling 2 LEDs through the I/O ports). This emission test is compliant with IEC 61967-2 standard which specifies the test board and the pin loading.

Table 54. EMI characteristics

Symbol	Parameter	Conditions	Monitored frequency band	Value vs f_{osc}/f_{CPU}			Unit
				8 MHz/ 4 MHz	8 MHz/ 16 MHz	8 MHz/ 32 MHz	
S_{EMI}	Peak(1)	V_{DD} = 3.6 V, T_A = 25 °C, compliant with IEC 61967-2	0.1 to 30 MHz	-21	-15	-12	dBµV
			30 to 130 MHz	-14	-12	-1	
			130 MHz to 1 GHz	-10	-11	-7	
	Level(2)		0.1 MHz to 1 GHz	1	1	1	-

1. Refer to the *EMI radiated test* section of the application note AN1709 “EMC design guide for STM8, STM32 and legacy MCUs”.
2. Refer to the *EMI level classification* section of the application note AN1709 “EMC design guide for STM8, STM32 and legacy MCUs”

6.3.11 Electrical sensitivity characteristics

Based on three different tests (ESD, LU) using specific measurement methods, the device is stressed in order to determine its performance in terms of electrical sensitivity.

Electrostatic discharge (ESD)

Electrostatic discharges (a positive then a negative pulse separated by 1 second) are applied to the pins of each sample according to each pin combination. The sample size depends on the number of supply pins in the device (3 parts × (n+1) supply pins). This test conforms to the ANSI/JEDEC standard.

Table 55. ESD absolute maximum ratings

Symbol	Ratings	Conditions	Class	Maximum value(1)	Unit
$V_{ESD(HBM)}$	Electrostatic discharge voltage (human body model)	T_A = +25 °C, conforming to ANSI/JEDEC JS-001	2	2000	V
$V_{ESD(CDM)}$	Electrostatic discharge voltage (charge device model)	T_A = +25 °C, conforming to ANSI/ESD STM5.3.1.	C4	500	

1. Guaranteed by characterization results.

Static latch-up

Two complementary static tests are required on six parts to assess the latch-up performance:

- A supply overvoltage is applied to each power supply pin
- A current injection is applied to each input, output and configurable I/O pin

These tests are compliant with EIA/JESD 78A IC latch-up standard.

Table 56. Electrical sensitivities

Symbol	Parameter	Conditions	Class
LU	Static latch-up class	T_A = +125 °C conforming to JESD78A	II level A

6.3.12 I/O current injection characteristics

As a general rule, current injection to the I/O pins, due to external voltage below V_{SS} or above V_{DD} (for standard pins) should be avoided during normal product operation. However, in order to give an indication of the robustness of the microcontroller in cases when abnormal injection accidentally happens, susceptibility tests are performed on a sample basis during device characterization.

Functional susceptibility to I/O current injection

While a simple application is executed on the device, the device is stressed by injecting current into the I/O pins programmed in floating input mode. While current is injected into the I/O pin, one at a time, the device is checked for functional failures.

The failure is indicated by an out of range parameter: ADC error above a certain limit (higher than 5 LSB TUE), out of conventional limits of induced leakage current on adjacent pins (out of –5 µA/+0 µA range), or other functional failure (for example reset occurrence oscillator frequency deviation, LCD levels).

The test results are given in the *Table 57*.

Table 57. I/O current injection susceptibility

Symbol	Description	Functional susceptibility		Unit
		Negative injection	Positive injection	
I_{INJ}	Injected current on BOOT0	-0	NA(1)	mA
	Injected current on PA0, PA4, PA5, PA11, PA12, PC15, PH0 and PH1	-5	0	
	Injected current on any other FT, FTf pins	-5 (2)	NA(1)	
	Injected current on any other pins	-5 (2)	+5	

1. Current injection is not possible.
2. It is recommended to add a Schottky diode (pin to ground) to analog pins which may potentially inject negative currents.

6.3.13 I/O port characteristics

General input/output characteristics

Unless otherwise specified, the parameters given in *Table 58* are derived from tests performed under the conditions summarized in *Table 24*. All I/Os are CMOS and TTL compliant.

Note: For information on GPIO configuration, refer to application note AN4899 "STM32 GPIO configuration for hardware settings and low-power consumption" available from the ST website www.st.com. In addition, it is recommended to use a GPIO low-level voltage ≤ 0.1 x V_{DD} and a GPIO high-level voltage ≥ 0.9 x V_{DD}, in order to have enough margin regarding the application transient or ripple on V_{DD} supply.

Table 58. I/O static characteristics

Symbol	Parameter	Conditions	Min	Typ	Max	Unit
V_{IL}	Input low level voltage	TC, FT, FTf, RST I/Os	-	-	$0.3V_{DD}$	V
		BOOT0 pin	-	-	$0.14V_{DD}$ (1)	
V_{IH}	Input high level voltage	All I/Os	$0.7\ V_{DD}$	-	-	
V_{hys}	I/O Schmitt trigger voltage hysteresis (2)	Standard I/Os	-	$10\%\ V_{DD}$ (3)	-	
		BOOT0 pin	-	0.01	-	
I_{lkg}	Input leakage current (4)	$V_{SS} \le V_{IN} \le V_{DD}$ All I/Os except for PA11, PA12, BOOT0 and FTf I/Os	-	-	±50	nA
		$V_{SS} \le V_{IN} \le V_{DD}$, PA11 and PA12 I/Os	-	-	-50/+250	
		$V_{SS} \le V_{IN} \le V_{DD}$ FTf I/Os	-	-	±100	
		$V_{DD} \le V_{IN} \le 5$ V All I/Os except for PA11, PA12, BOOT0 and FTf I/Os	-	-	200	nA
		$V_{DD} \le V_{IN} \le 5$ V FTf I/Os	-	-	500	
		$V_{DD} \le V_{IN} \le 5$ V PA11, PA12 and BOOT0	-	-	10	µA
R_{PU}	Weak pull-up equivalent resistor(5)	$V_{IN} = V_{SS}$	25	45	65	kΩ
R_{PD}	Weak pull-down equivalent resistor(5)	$V_{IN} = V_{DD}$	25	45	65	kΩ
C_{IO}	I/O pin capacitance	-	-	5	-	pF

1. Guaranteed by characterization.
2. Hysteresis voltage between Schmitt trigger switching levels. Guaranteed by characterization results.
3. With a minimum of 200 mV. Guaranteed by characterization results.
4. The max. value may be exceeded if negative current is injected on adjacent pins.

5. Pull-up and pull-down resistors are designed with a true resistance in series with a switchable PMOS/NMOS. This MOS/NMOS contribution to the series resistance is minimum (~10% order).

Figure 22. V_{IH}/V_{IL} versus VDD (CMOS I/Os)

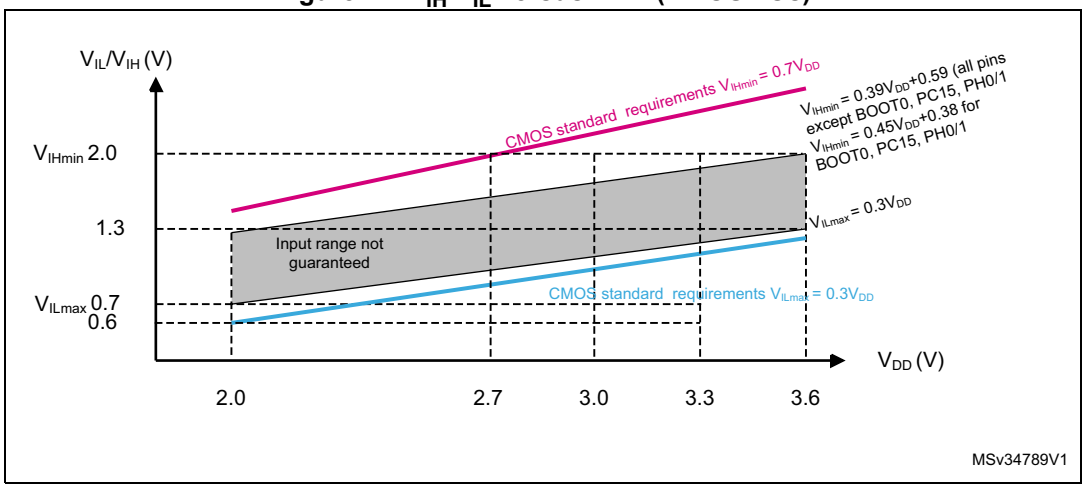

Figure 23. V_{IH}/V_{IL} versus VDD (TTL I/Os)

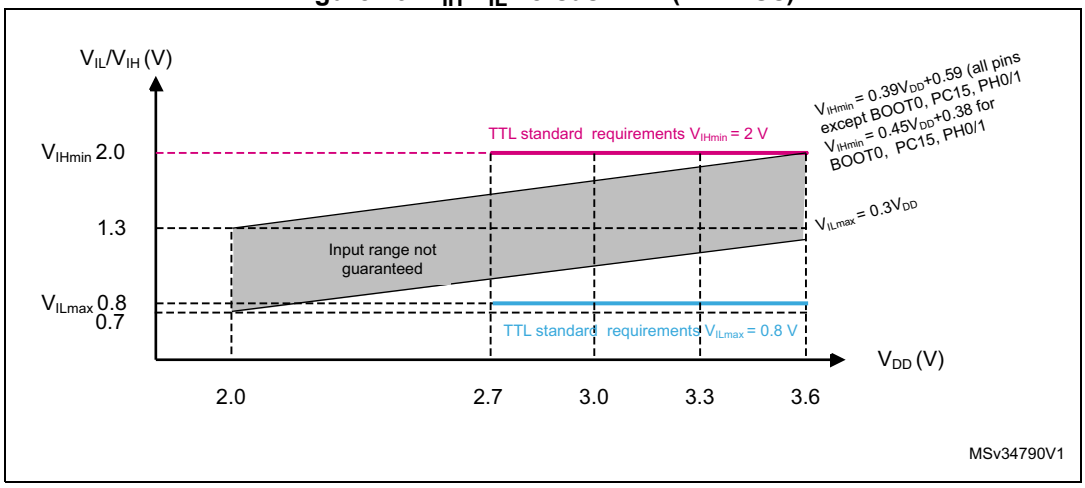

Output driving current

The GPIOs (general purpose input/outputs) can sink or source up to ±8 mA, and sink or source up to ±15 mA with the non-standard V_{OL}/V_{OH} specifications given in *Table 59*.

In the user application, the number of I/O pins which can drive current must be limited to respect the absolute maximum rating specified in *Section 6.2*:

- The sum of the currents sourced by all the I/Os on $V_{DD,}$ plus the maximum Run consumption of the MCU sourced on $V_{DD,}$ cannot exceed the absolute maximum rating $I_{VDD(\Sigma)}$ (see *Table 22*).
- The sum of the currents sunk by all the I/Os on V_{SS} plus the maximum Run consumption of the MCU sunk on V_{SS} cannot exceed the absolute maximum rating $I_{VSS(\Sigma)}$ (see *Table 22*).

Output voltage levels

Unless otherwise specified, the parameters given in *Table 59* are derived from tests performed under ambient temperature and V_{DD} supply voltage conditions summarized in *Table 24*. All I/Os are CMOS and TTL compliant.

Table 59. Output voltage characteristics

Symbol	Parameter	Conditions	Min	Max	Unit
V_{OL}(1)	Output low level voltage for an I/O pin	CMOS port(2), I_{IO} = +8 mA 2.7 V ≤ V_{DD} ≤ 3.6 V	-	0.4	V
V_{OH}(3)	Output high level voltage for an I/O pin		V_{DD}-0.4	-	
V_{OL} (1)	Output low level voltage for an I/O pin	TTL port(2), I_{IO} =+ 8 mA 2.7 V ≤V_{DD} ≤ 3.6 V	-	0.4	
V_{OH} (3)(4)	Output high level voltage for an I/O pin	TTL port(2), I_{IO} = -6 mA 2.7 V ≤V_{DD} ≤ 3.6 V	2.4	-	
V_{OL}(1)(4)	Output low level voltage for an I/O pin	I_{IO} = +15 mA 2.7 V ≤V_{DD} ≤ 3.6 V	-	1.3	
V_{OH}(3)(4)	Output high level voltage for an I/O pin	I_{IO} = -15 mA 2.7 V ≤V_{DD} ≤ 3.6 V	V_{DD}-1.3	-	
V_{OL}(1)(4)	Output low level voltage for an I/O pin	I_{IO} = +4 mA 1.65 V ≤V_{DD} < 3.6 V	-	0.45	
V_{OH}(3)(4)	Output high level voltage for an I/O pin	I_{IO} = -4 mA 1.65 V ≤V_{DD} ≤ 3.6 V	V_{DD}-0.45	-	
V_{OLFM+}(1)(4)	Output low level voltage for an FTf I/O pin in Fm+ mode	I_{IO} = 20 mA 2.7 V ≤V_{DD} ≤ 3.6 V	-	0.4	
		I_{IO} = 10 mA 1.65 V ≤V_{DD} ≤ 3.6 V	-	0.4	

1. The I_{IO} current sunk by the device must always respect the absolute maximum rating specified in *Table 22*. The sum of the currents sunk by all the I/Os (I/O ports and control pins) must always be respected and must not exceed $\Sigma I_{IO(PIN)}$.
2. TTL and CMOS outputs are compatible with JEDEC standards JESD36 and JESD52.
3. The I_{IO} current sourced by the device must always respect the absolute maximum rating specified in *Table 22*. The sum of the currents sourced by all the I/Os (I/O ports and control pins) must always be respected and must not exceed $\Sigma I_{IO(PIN)}$.
4. Guaranteed by characterization results.

Input/output AC characteristics

The definition and values of input/output AC characteristics are given in *Figure 24* and *Table 60*, respectively.

Unless otherwise specified, the parameters given in *Table 60* are derived from tests performed under ambient temperature and V_{DD} supply voltage conditions summarized in *Table 24*.

Table 60. I/O AC characteristics(1)

OSPEEDRx[1:0] bit value(1)	Symbol	Parameter	Conditions	Min	Max(2)	Unit
00	$f_{max(IO)out}$	Maximum frequency(3)	C_L = 50 pF, V_{DD} = 2.7 V to 3.6 V	-	400	kHz
			C_L = 50 pF, V_{DD} = 1.65 V to 2.7 V	-	100	
	$t_{f(IO)out}$ $t_{r(IO)out}$	Output rise and fall time	C_L = 50 pF, V_{DD} = 2.7 V to 3.6 V	-	125	ns
			C_L = 50 pF, V_{DD} = 1.65 V to 2.7 V	-	320	
01	$f_{max(IO)out}$	Maximum frequency(3)	C_L = 50 pF, V_{DD} = 2.7 V to 3.6 V	-	2	MHz
			C_L = 50 pF, V_{DD} = 1.65 V to 2.7 V	-	0.6	
	$t_{f(IO)out}$ $t_{r(IO)out}$	Output rise and fall time	C_L = 50 pF, V_{DD} = 2.7 V to 3.6 V	-	30	ns
			C_L = 50 pF, V_{DD} = 1.65 V to 2.7 V	-	65	
10	$F_{max(IO)out}$	Maximum frequency(3)	C_L = 50 pF, V_{DD} = 2.7 V to 3.6 V	-	10	MHz
			C_L = 50 pF, V_{DD} = 1.65 V to 2.7 V	-	2	
	$t_{f(IO)out}$ $t_{r(IO)out}$	Output rise and fall time	C_L = 50 pF, V_{DD} = 2.7 V to 3.6 V	-	13	ns
			C_L = 50 pF, V_{DD} = 1.65 V to 2.7 V	-	28	
11	$F_{max(IO)out}$	Maximum frequency(3)	C_L = 30 pF, V_{DD} = 2.7 V to 3.6 V	-	35	MHz
			C_L = 50 pF, V_{DD} = 1.65 V to 2.7 V	-	10	
	$t_{f(IO)out}$ $t_{r(IO)out}$	Output rise and fall time	C_L = 30 pF, V_{DD} = 2.7 V to 3.6 V	-	6	ns
			C_L = 50 pF, V_{DD} = 1.65 V to 2.7 V	-	17	
Fm+ configuration(4)	$f_{max(IO)out}$	Maximum frequency(3)	C_L = 50 pF, V_{DD} = 2.5 V to 3.6 V	-	1	MHz
	$t_{f(IO)out}$	Output fall time		-	10	ns
	$t_{r(IO)out}$	Output rise time		-	30	
	$f_{max(IO)out}$	Maximum frequency(3)	C_L = 50 pF, V_{DD} = 1.65 V to 3.6 V	-	350	KHz
	$t_{f(IO)out}$	Output fall time		-	15	ns
	$t_{r(IO)out}$	Output rise time		-	60	
-	t_{EXTIpw}	Pulse width of external signals detected by the EXTI controller	-	8	-	ns

1. The I/O speed is configured using the OSPEEDRx[1:0] bits. Refer to the line reference manual for a description of GPIO Port configuration register.
2. Guaranteed by design.
3. The maximum frequency is defined in *Figure 24*.
4. When Fm+ configuration is set, the I/O speed control is bypassed. Refer to the line reference manual for a detailed description of Fm+ I/O configuration.

Figure 24. I/O AC characteristics definition

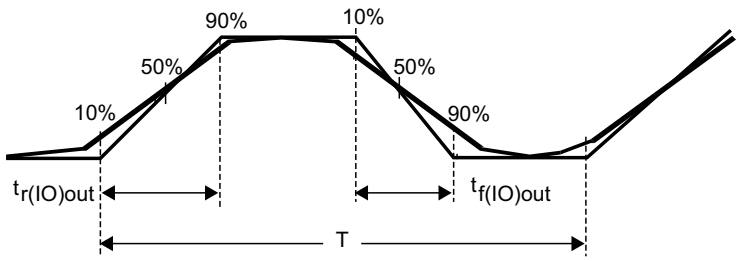

Maximum frequency is achieved with a duty cycle at (45 - 55%) when loaded by the specified capacitance.

6.3.14 NRST pin characteristics

The NRST pin input driver uses CMOS technology. It is connected to a permanent pull-up resistor, R_{PU} , except when it is internally driven low (see *Table 61*).

Unless otherwise specified, the parameters given in *Table 61* are derived from tests performed under ambient temperature and V_{DD} supply voltage conditions summarized in *Table 24*.

Table 61. NRST pin characteristics

Symbol	Parameter	Conditions	Min	Typ	Max	Unit
$V_{IL(NRST)}$(1)	NRST input low level voltage	-	V_{SS}	-	0.8	V
$V_{IH(NRST)}$(1)	NRST input high level voltage	-	1.4	-	V_{DD}	
$V_{OL(NRST)}$(1)	NRST output low level voltage	I_{OL} = 2 mA 2.7 V < V_{DD} < 3.6 V	-	-	0.4	
		I_{OL} = 1.5 mA 1.65 V < V_{DD} < 2.7 V	-	-		
$V_{hys(NRST)}$(1)	NRST Schmitt trigger voltage hysteresis	-	-	10%V_{DD}(2)	-	mV
R_{PU}	Weak pull-up equivalent resistor(3)	V_{IN} = V_{SS}	25	45	65	kΩ
$V_{F(NRST)}$(1)	NRST input filtered pulse	-	-	-	50	ns
$V_{NF(NRST)}$(1)	NRST input not filtered pulse	-	350	-	-	ns

1. Guaranteed by design.
2. 200 mV minimum value
3. The pull-up is designed with a true resistance in series with a switchable PMOS. This PMOS contribution to the series resistance is around 10%.

Figure 25. Recommended NRST pin protection

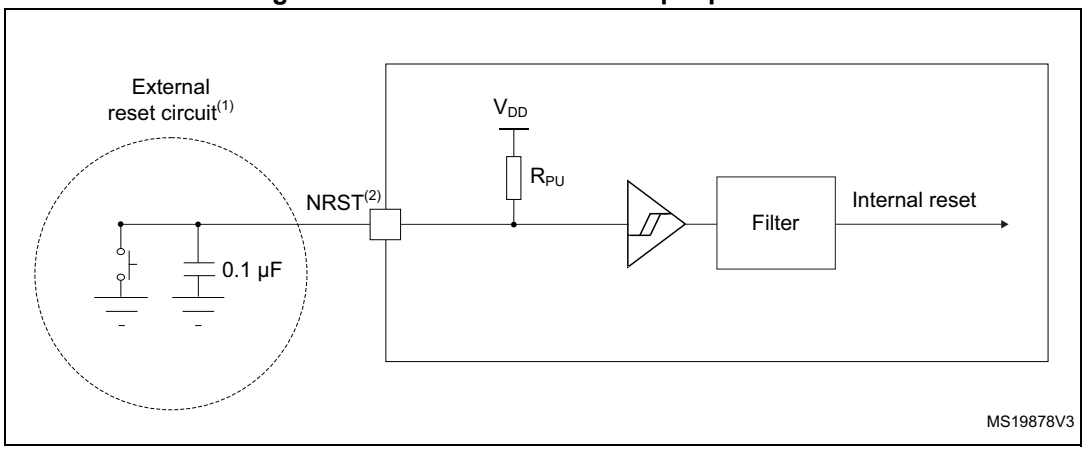

1. The reset network protects the device against parasitic resets.
2. The external capacitor must be placed as close as possible to the device.
3. The user must ensure that the level on the NRST pin can go below the $V_{IL(NRST)}$ max level specified in *Table 61*. Otherwise the reset will not be taken into account by the device.

6.3.15 12-bit ADC characteristics

Unless otherwise specified, the parameters given in *Table 62* are derived from tests performed under ambient temperature, f_{PCLK} frequency and V_{DDA} supply voltage conditions summarized in *Table 24: General operating conditions*.

Note: It is recommended to perform a calibration after each power-up.

Table 62. ADC characteristics

Symbol	Parameter	Conditions	Min	Typ	Max	Unit
V_{DDA}	Analog supply voltage for ADC ON	Fast channel	1.65	-	3.6	V
		Standard channel	1.75(1)	-	3.6	
V_{REF+}	Positive reference voltage	-	1.65		V_{DDA}	V
$I_{DDA\ (ADC)}$	Current consumption of the ADC on $V_{DDA}$and V_{REF+}	1.14 Msps	-	200	-	µA
		10 ksps	-	40	-	
	Current consumption of the ADC on V_{DD}(2)	1.14 Msps	-	70	-	
		10 ksps	-	1	-	
f_{ADC}	ADC clock frequency	Voltage scaling Range 1	0.14	-	16	MHz
		Voltage scaling Range 2	0.14	-	8	
		Voltage scaling Range 3	0.14	-	4	
f_S(3)	Sampling rate	12-bit resolution	0.01	-	1.14	MHz
f_{TRIG}(3)	External trigger frequency	f_{ADC} = 16 MHz, 12-bit resolution	-	-	941	kHz
		-	-	-	17	$1/f_{ADC}$
V_{AIN}	Conversion voltage range	-	0	-	V_{REF+}	V

Table 62. ADC characteristics (continued)

Symbol	Parameter	Conditions	Min	Typ	Max	Unit
R_{AIN}(3)	External input impedance	See *Equation 1* and *Table 63* for details	-	-	50	kΩ
R_{ADC}(3)(4)	Sampling switch resistance	-	-	-	1	kΩ
C_{ADC}(3)	Internal sample and hold capacitor	-	-	-	8	pF
t_{CAL}(3)(5)	Calibration time	f_{ADC} = 16 MHz	5.2			µs
		-	83			$1/f_{ADC}$
$W_{LATENCY}$(6)	ADC_DR register write latency	ADC clock = HSI16	1.5 ADC cycles + 2 f_{PCLK} cycles	-	1.5 ADC cycles + 3 f_{PCLK} cycles	-
		ADC clock = PCLK/2	-	4.5	-	f_{PCLK} cycle
		ADC clock = PCLK/4	-	8.5	-	f_{PCLK} cycle
t_{latr}(3)	Trigger conversion latency	$f_{ADC} = f_{PCLK}/2$ = 16 MHz	0.266			µs
		$f_{ADC} = f_{PCLK}/2$	8.5			$1/f_{PCLK}$
		$f_{ADC} = f_{PCLK}/4$ = 8 MHz	0.516			µs
		$f_{ADC} = f_{PCLK}/4$	16.5			$1/f_{PCLK}$
		$f_{ADC} = f_{HSI16}$ = 16 MHz	0.252	-	0.260	µs
$Jitter_{ADC}$	ADC jitter on trigger conversion	$f_{ADC} = f_{HSI16}$	-	1	-	$1/f_{HSI16}$
t_S(3)	Sampling time	f_{ADC} = 16 MHz	0.093	-	10.03	µs
		-	1.5	-	160.5	$1/f_{ADC}$
t_{UP_LDO}(3)(5)	Internal LDO power-up time	-	-	-	10	µs
t_{STAB}(3)(5)	ADC stabilization time	-	14			$1/f_{ADC}$
t_{ConV}(3)	Total conversion time (including sampling time)	f_{ADC} = 16 MHz, 12-bit resolution	0.875	-	10.81	µs
		12-bit resolution	14 to 173 (t_S for sampling +12.5 for successive approximation)			$1/f_{ADC}$

1. V_{DDA} minimum value can be decreased in specific temperature conditions. Refer to *Table 63: R_{AIN} max for f_{ADC} = 16 MHz*.
2. A current consumption proportional to the APB clock frequency has to be added (see *Table 38: Peripheral current consumption in Run or Sleep mode*).
3. Guaranteed by design.
4. Standard channels have an extra protection resistance which depends on supply voltage. Refer to *Table 63: R_{AIN} max for f_{ADC} = 16 MHz*.
5. This parameter only includes the ADC timing. It does not take into account register access latency.
6. This parameter specifies the latency to transfer the conversion result into the ADC_DR register. EOC bit is set to indicate the conversion is complete and has the same latency.

Equation 1: R_{AIN} max formula

$$R_{AIN} < \frac{T_S}{f_{ADC} \times C_{ADC} \times \ln(2^{N+2})} - R_{ADC}$$

The simplified formula above (*Equation 1*) is used to determine the maximum external impedance allowed for an error below 1/4 of LSB. Here N = 12 (from 12-bit resolution).

Table 63. R_{AIN} max for f_{ADC} = 16 MHz(1)

T_S (cycles)	t_S (µs)	R_{AIN} max for fast channels (kΩ)	R_{AIN} max for standard channels (kΩ)						
			V_{DD} > 2.7 V	V_{DD} > 2.4 V	V_{DD} > 2.0 V	V_{DD} > 1.8 V	V_{DD} > 1.75 V	V_{DD} > 1.65 V and T_A > -10 °C	V_{DD} > 1.65 V and T_A > 25 °C
1.5	0.09	0.5	< 0.1	NA	NA	NA	NA	NA	NA
3.5	0.22	1	0.2	< 0.1	NA	NA	NA	NA	NA
7.5	0.47	2.5	1.7	1.5	< 0.1	NA	NA	NA	NA
12.5	0.78	4	3.2	3	1	NA	NA	NA	NA
19.5	1.22	6.5	5.7	5.5	3.5	NA	NA	NA	< 0.1
39.5	2.47	13	12.2	12	10	NA	NA	NA	5
79.5	4.97	27	26.2	26	24	< 0.1	NA	NA	19
160.5	10.03	50	49.2	49	47	32	< 0.1	< 0.1	42

1. Guaranteed by design.

Table 64. ADC accuracy(1)(2)(3)

Symbol	Parameter	Conditions	Min	Typ	Max	Unit
ET	Total unadjusted error	1.65 V < V_{DDA} = V_{REF+} < 3.6 V, range 1/2/3	-	2	4	LSB
EO	Offset error		-	1	2.5	
EG	Gain error		-	1	2	
EL	Integral linearity error		-	1.5	2.5	
ED	Differential linearity error		-	1	1.5	
ENOB	Effective number of bits		10.2	11		bits
	Effective number of bits (16-bit mode oversampling with ratio =256)(4)		11.3	12.1	-	
SINAD	Signal-to-noise distortion		63	69	-	dB
SNR	Signal-to-noise ratio		63	69	-	
	Signal-to-noise ratio (16-bit mode oversampling with ratio =256)(4)		70	76	-	
THD	Total harmonic distortion		-	-85	-73	

Table 64. ADC accuracy(1)(2)(3) (continued)

Symbol	Parameter	Conditions	Min	Typ	Max	Unit
ET	Total unadjusted error	1.65 V < V_{REF+} < V_{DDA} < 3.6 V, range 1/2/3	-	2	5	LSB
EO	Offset error		-	1	2.5	
EG	Gain error		-	1	2	
EL	Integral linearity error		-	1.5	3	
ED	Differential linearity error		-	1	2	
ENOB	Effective number of bits		10.0	11.0	-	bits
SINAD	Signal-to-noise distortion		62	69	-	dB
SNR	Signal-to-noise ratio		61	69	-	
THD	Total harmonic distortion		-	-85	-65	

1. ADC DC accuracy values are measured after internal calibration.
2. ADC Accuracy vs. Negative Injection Current: Injecting negative current on any of the standard (non-robust) analog input pins should be avoided as this significantly reduces the accuracy of the conversion being performed on another analog input. It is recommended to add a Schottky diode (pin to ground) to standard analog pins which may potentially inject negative current.
   Any positive injection current within the limits specified for $I_{INJ(PIN)}$ and $\Sigma I_{INJ(PIN)}$ in *Section 6.3.12* does not affect the ADC accuracy.
3. Better performance may be achieved in restricted V_{DDA}, frequency and temperature ranges.
4. This number is obtained by the test board without additional noise, resulting in non-optimized value for oversampling mode.

Figure 26. ADC accuracy characteristics

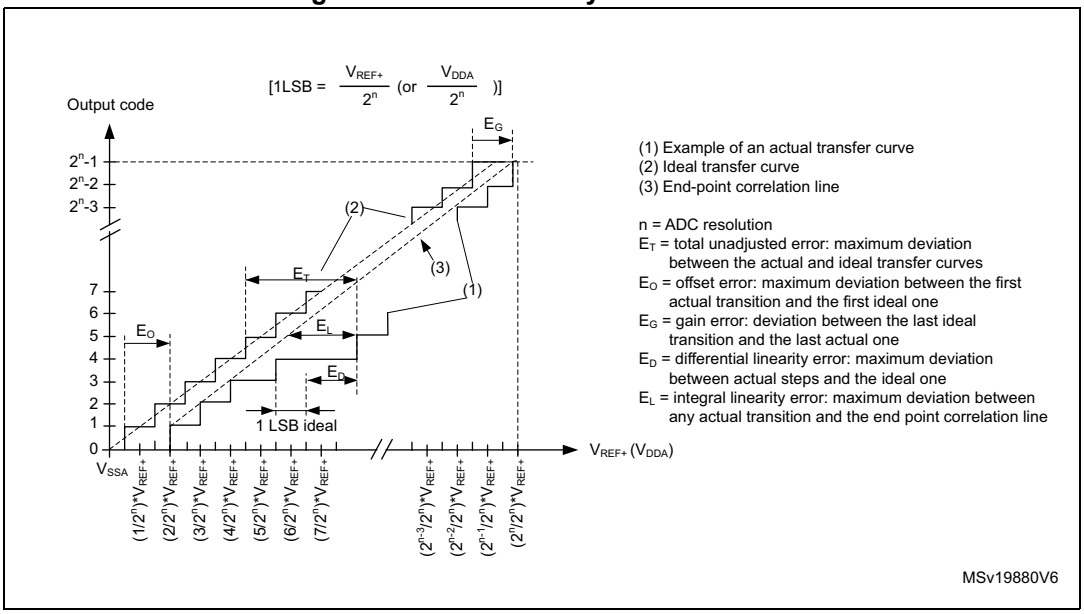

Figure 27. Typical connection diagram using the ADC

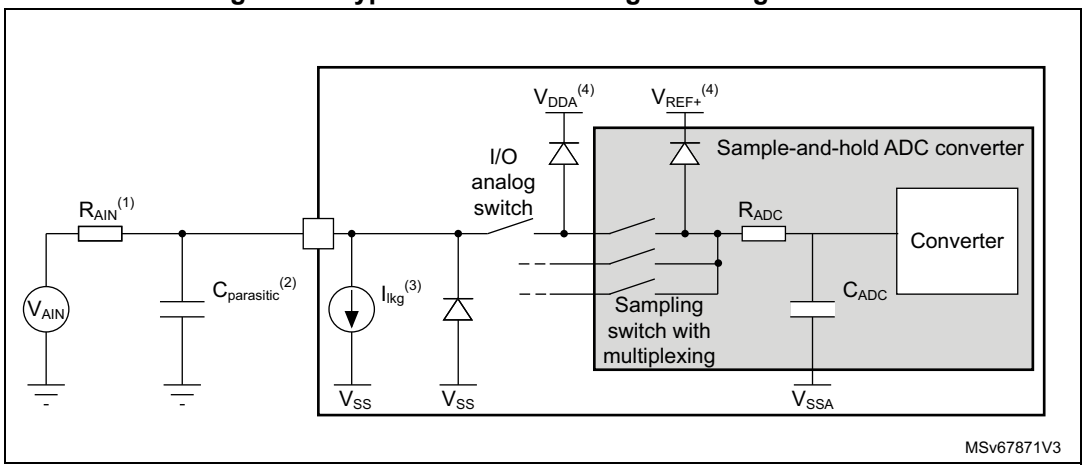

1. Refer to *Table 62: ADC characteristics* for the values of R_{AIN} and C_{ADC}.
2. $C_{parasitic}$ represents the capacitance of the PCB (dependent on soldering and PCB layout quality) plus the pad capacitance (refer to *Table 58: I/O static characteristics*). A high $C_{parasitic}$ value downgrades conversion accuracy. To remedy this, f_{ADC} must be reduced.
3. Refer to *Table 58: I/O static characteristics* for the value of I_{lkg}.
4. Refer to *Figure 9: Power supply scheme*.

General PCB design guidelines

Power supply decoupling should be performed as shown in *Figure 28* or *Figure 29*, depending on whether V_{REF+} is connected to V_{DDA} or not. The 10 nF capacitors should be ceramic (good quality). They should be placed as close as possible to the chip.

Figure 28. Power supply and reference decoupling (V_{REF+} not connected to V_{DDA})

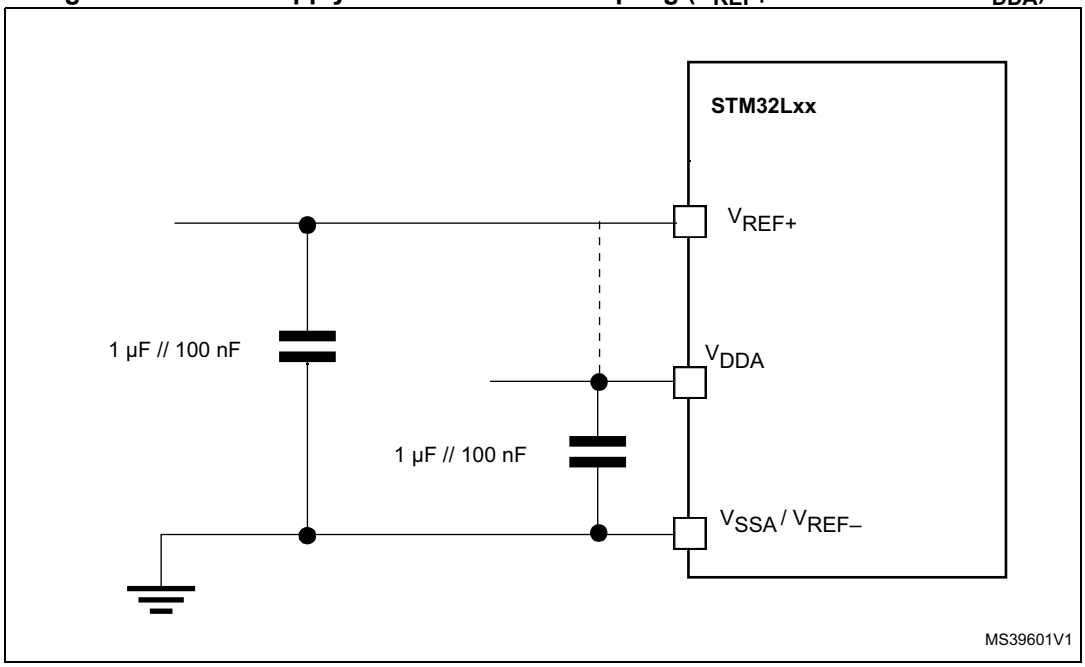

Figure 29. Power supply and reference decoupling (V_{REF+} connected to V_{DDA})

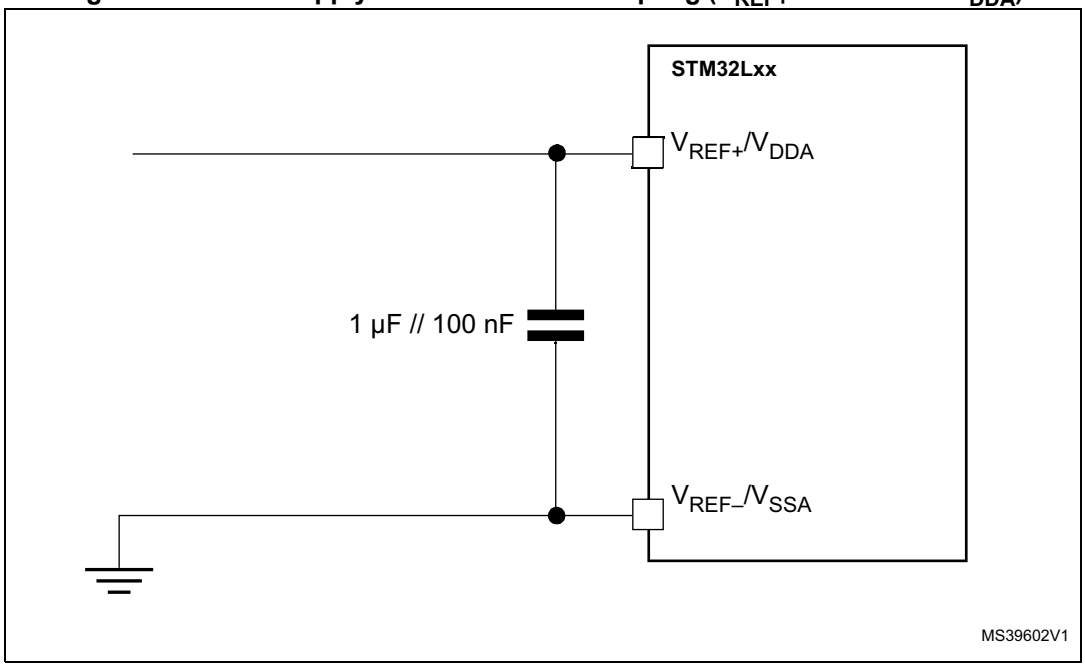

6.3.16 DAC electrical characteristics

Data guaranteed by design, not tested in production, unless otherwise specified.

Table 65. DAC characteristics

Symbol	Parameter	Conditions		Min	Typ	Max	Unit
V_{DDA}	Analog supply voltage	-		1.8	-	3.6	V
V_{REF+}	Reference supply voltage	V_{REF+} must always be below V_{DDA}		1.8	-	3.6	V
V_{REF-}	Lower reference voltage	-		V_{SSA}			V
$I_{DDVREF+}$ (1)	Current consumption on V_{REF+} supply V_{REF+} = 3.3 V	No load, middle code (0x800)		-	130	220	µA
		No load, worst code (0x000)		-	220	350	
I_{DDA} (2)	Current consumption on V_{DDA} supply, V_{DDA} = 3.3 V	No load, middle code (0x800)		-	210	320	µA
		No load, worst code (0xF1C)		-	320	520	
R_L (3)	Resistive load	DAC output ON	R_L connected to V_{SSA}	5	-	-	kΩ
			R_L connected to V_{DDA}	25	-	-	
C_L (3)	Capacitive load	DAC output buffer ON		-	-	50	pF
R_O	Output impedance	DAC output buffer OFF		12	16	20	kΩ
V_{DAC_OUT}	Voltage on DAC_OUT output	DAC output buffer ON		0.2	-	V_{DDA} – 0.2	V
		DAC output buffer OFF		0.5	-	V_{REF+} – 1LSB	mV

Table 65. DAC characteristics (continued)

Symbol	Parameter	Conditions	Min	Typ	Max	Unit
DNL(2)	Differential non linearity(4)	$C_L \leq 50$ pF, $R_L \geq 5$ kΩ DAC output buffer ON	-	1.5	3	LSB
		No R_{LOAD}, $C_L \leq 50$ pF DAC output buffer OFF	-	1.5	3	
INL(2)	Integral non linearity(5)	$C_L \leq 50$ pF, $R_L \geq 5$ kΩ DAC output buffer ON	-	2	4	
		No R_{LOAD}, $C_L \leq 50$ pF DAC output buffer OFF	-	2	4	
Offset(2)	Offset error at code 0x800 (6)	$C_L \leq 50$ pF, $R_L \geq 5$ kΩ DAC output buffer ON	-	±10	±25	
		No R_{LOAD}, $C_L \leq 50$ pF DAC output buffer OFF	-	±5	±8	
Offset1(2)	Offset error at code 0x001(7)	No R_{LOAD}, $C_L \leq 50$ pF DAC output buffer OFF	-	±1.5	±5	
dOffset/dT(2)	Offset error temperature coefficient (code 0x800)	V_{DDA} = 3.3V V_{REF+}= 3.0 V T_A = 0 to 50 °C DAC output buffer OFF	-20	-10	0	µV/°C
		V_{DDA} = 3.3V V_{REF+}= 3.0 V T_A = 0 to 50 °C DAC output buffer ON	0	20	50	
Gain(2)	Gain error(8)	$C_L \leq 50$ pF, $R_L \geq 5$ kΩ DAC output buffer ON	-	+0.1 / -0.2%	+0.2 / -0.5%	%
		No R_{LOAD}, $C_L \leq 50$ pF DAC output buffer OFF	-	+0 / -0.2%	+0 / -0.4%	
dGain/dT(2)	Gain error temperature coefficient	V_{DDA} = 3.3V V_{REF+}= 3.0 V T_A = 0 to 50 °C DAC output buffer OFF	-10	-2	0	µV/°C
		V_{DDA} = 3.3V V_{REF+}= 3.0 V T_A = 0 to 50 °C DAC output buffer ON	-40	-8	0	
TUE(2)	Total unadjusted error	$C_L \leq 50$ pF, $R_L \geq 5$ kΩ DAC output buffer ON	-	12	30	LSB
		No R_{LOAD}, $C_L \leq 50$ pF DAC output buffer OFF	-	8	12	

Table 65. DAC characteristics (continued)

Symbol	Parameter	Conditions	Min	Typ	Max	Unit
$t_{SETTLING}$	Settling time (full scale: for a 12-bit code transition between the lowest and the highest input codes till DAC_OUT reaches final value ±1LSB	$C_L \leq 50$ pF, $R_L \geq 5$ kΩ	-	7	12	µs
Update rate	Max frequency for a correct DAC_OUT change (95% of final value) with 1 LSB variation in the input code	$C_L \leq 50$ pF, $R_L \geq 5$ kΩ	-	-	1	Msps
t_{WAKEUP}	Wake-up time from off state (setting the ENx bit in the DAC Control register)(9)	$C_L \leq 50$ pF, $R_L \geq 5$ kΩ	-	9	15	µs
PSRR+	V_{DDA} supply rejection ratio (static DC measurement)	$C_L \leq 50$ pF, $R_L \geq 5$ kΩ	-	-60	-35	dB

1. Guaranteed by characterization results.
2. Guaranteed by design, not tested in production.
3. Connected between DAC_OUT and V_{SSA}.
4. Difference between two consecutive codes - 1 LSB.
5. Difference between measured value at Code i and the value at Code i on a line drawn between Code 0 and last Code 4095.
6. Difference between the value measured at Code (0x800) and the ideal value = $V_{REF+}/2$.
7. Difference between the value measured at Code (0x001) and the ideal value.
8. Difference between ideal slope of the transfer function and measured slope computed from code 0x000 and 0xFFF when buffer is OFF, and from code giving 0.2 V and (V_{DDA} – 0.2) V when buffer is ON.
9. In buffered mode, the output can overshoot above the final value for low input code (starting from min value).

Figure 30. 12-bit buffered/non-buffered DAC

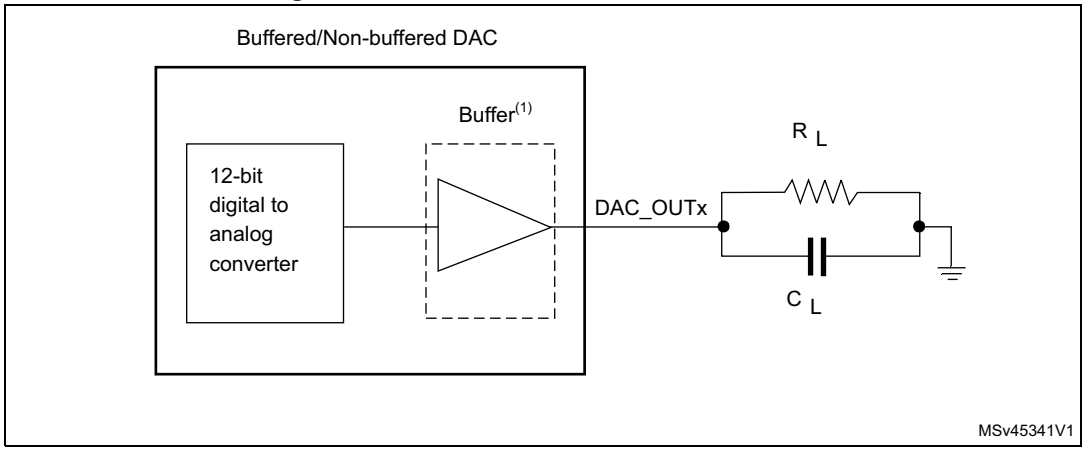

1. The DAC integrates an output buffer that can be used to reduce the output impedance and to drive external loads directly without the use of an external operational amplifier. The buffer can be bypassed by configuring the BOFFx bit in the DAC_CR register.

6.3.17 Temperature sensor characteristics

Table 66. Temperature sensor calibration values

Calibration value name	Description	Memory address
TS_CAL1	TS ADC raw data acquired at temperature of 30 °C, V_{DDA}= 3 V	0x1FF8 007A - 0x1FF8 007B
TS_CAL2	TS ADC raw data acquired at temperature of 130 °C, V_{DDA}= 3 V	0x1FF8 007E - 0x1FF8 007F

Table 67. Temperature sensor characteristics

Symbol	Parameter	Min	Typ	Max	Unit
T_L(1)	V_{SENSE} linearity with temperature	-	±1	±2	°C
Avg_Slope(1)	Average slope	1.48	1.61	1.75	mV/°C
V_{130}	Voltage at 130°C ±5°C(2)	640	670	700	mV
$I_{DDA(TEMP)}$(3)	Current consumption	-	3.4	6	µA
t_{START}(3)	Startup time	-	-	10	µs
T_{S_temp}(4)(3)	ADC sampling time when reading the temperature	10	-	-	

1. Guaranteed by characterization results.
2. Measured at V_{DD} = 3 V ±10 mV. V130 ADC conversion result is stored in the TS_CAL2 byte.
3. Guaranteed by design.
4. Shortest sampling time can be determined in the application by multiple iterations.

6.3.18 Comparators

Table 68. Comparator 1 characteristics

Symbol	Parameter	Conditions	Min(1)	Typ	Max(1)	Unit
V_{DDA}	Analog supply voltage	-	1.65		3.6	V
V_{IN}	Comparator 1 input voltage range	-	0.6	-	V_{DDA}	V
t_{START}	Comparator startup time	-	-	7	10	µs
t_d	Propagation delay(2)	-	-	3	10	
V_{offset}	Comparator offset	-	-	±3	±10	mV
$d_{Voffset}/dt$	Comparator offset variation in worst voltage stress conditions	V_{DDA} = 3.6 V, V_{IN+} = 0 V, V_{IN-} = V_{REFINT}, T_A = 25 °C	0	1.5	10	mV/1000 h
I_{COMP1}	Current consumption(3)	-	-	160	260	nA

1. Guaranteed by characterization.
2. The delay is characterized for 100 mV input step with 10 mV overdrive on the inverting input, the non-inverting input set to the reference.
3. Comparator consumption only. Internal reference voltage not included.

Table 69. Comparator 2 characteristics

Symbol	Parameter	Conditions	Min	Typ	Max(1)	Unit
V_{DDA}	Analog supply voltage	-	1.65	-	3.6	V
V_{IN}	Comparator 2 input voltage range	-	0	-	V_{DDA}	V
t_{START}	Comparator startup time	Fast mode	-	15	20	µs
		Slow mode	-	20	25	
$t_{d\ slow}$	Propagation delay(2) in slow mode	1.65 V ≤V_{DDA} ≤2.7 V	-	1.8	3.5	
		2.7 V ≤V_{DDA} ≤3.6 V	-	2.5	6	
$t_{d\ fast}$	Propagation delay(2) in fast mode	1.65 V ≤V_{DDA} ≤2.7 V	-	0.8	2	
		2.7 V ≤V_{DDA} ≤3.6 V	-	1.2	4	
V_{offset}	Comparator offset error		-	±4	±20	mV
$d_{Threshold}/d_t$	Threshold voltage temperature coefficient	V_{DDA} = 3.3V, T_A = 0 to 50 °C, V- = V_{REFINT}, 3/4 V_{REFINT}, 1/2 V_{REFINT}, 1/4 V_{REFINT}.	-	15	30	ppm /°C
I_{COMP2}	Current consumption(3)	Fast mode	-	3.5	5	µA
		Slow mode	-	0.5	2	

1. Guaranteed by characterization results.
2. The delay is characterized for 100 mV input step with 10 mV overdrive on the inverting input, the non-inverting input set to the reference.
3. Comparator consumption only. Internal reference voltage (required for comparator operation) is not included.

6.3.19 Timer characteristics

TIM timer characteristics

The parameters given in the *Table 70* are guaranteed by design.

Refer to *Section 6.3.13: I/O port characteristics* for details on the input/output alternate function characteristics (output compare, input capture, external clock, PWM output).

Table 70. TIMx characteristics(1)

Symbol	Parameter	Conditions	Min	Max	Unit
$t_{res(TIM)}$	Timer resolution time		1	-	$t_{TIMxCLK}$
		$f_{TIMxCLK}$ = 32 MHz	31.25	-	ns
f_{EXT}	Timer external clock frequency on CH1 to CH4		0	$f_{TIMxCLK}/2$	MHz
		$f_{TIMxCLK}$ = 32 MHz	0	16	MHz
Res_{TIM}	Timer resolution	-		16	bit
$t_{COUNTER}$	16-bit counter clock period when internal clock is selected (timer's prescaler disabled)	-	1	65536	$t_{TIMxCLK}$
		$f_{TIMxCLK}$ = 32 MHz	0.0312	2048	µs
t_{MAX_COUNT}	Maximum possible count	-	-	65536 × 65536	$t_{TIMxCLK}$
		$f_{TIMxCLK}$ = 32 MHz	-	134.2	s

1. TIMx is used as a general term to refer to the TIM2, TIM6, TIM21, and TIM22 timers.

6.3.20 Communications interfaces

I^2C interface characteristics

The I^2C interface meets the timings requirements of the I^2C-bus specification and user manual rev. 03 for:

- Standard-mode (Sm) : with a bit rate up to 100 kbit/s
- Fast-mode (Fm) : with a bit rate up to 400 kbit/s
- Fast-mode Plus (Fm+) : with a bit rate up to 1 Mbit/s.

The I^2C timing requirements are guaranteed by design when the I^2C peripheral is properly configured (refer to the reference manual for details). The SDA and SCL I/O requirements are met with the following restrictions: the SDA and SCL I/O pins are not "true" open-drain. When configured as open-drain, the PMOS connected between the I/O pin and VDDIOx is disabled, but is still present. Only FTf I/O pins support Fm+ low level output current maximum requirement (refer to *Section 6.3.13: I/O port characteristics* for the I2C I/Os characteristics).

All I^2C SDA and SCL I/Os embed an analog filter (see *Table 71* for the analog filter characteristics).

The analog spike filter is compliant with I^2C timings requirements only for the following voltage ranges:

- Fast mode Plus: 2.7 V ≤V_{DD} ≤3.6 V and voltage scaling Range 1
- Fast mode:
  - 2 V ≤V_{DD} ≤3.6 V and voltage scaling Range 1 or Range 2.
  - V_{DD} < 2 V, voltage scaling Range 1 or Range 2, C_{load} < 200 pF.

In other ranges, the analog filter should be disabled. The digital filter can be used instead.

Note: In Standard mode, no spike filter is required.

Table 71. I2C analog filter characteristics(1)

Symbol	Parameter	Conditions	Min	Max	Unit
t_{AF}	Maximum pulse width of spikes that are suppressed by the analog filter	Range 1	50(2)	100(3)	ns
		Range 2		-	
		Range 3		-	

1. Guaranteed by characterization results.
2. Spikes with widths below $t_{AF(min)}$ are filtered.
3. Spikes with widths above $t_{AF(max)}$ are not filtered

SPI characteristics

Unless otherwise specified, the parameters given in the following tables are derived from tests performed under ambient temperature, f_{PCLKx} frequency and V_{DD} supply voltage conditions summarized in *Table 24*.

Refer to *Section 6.3.12: I/O current injection characteristics* for more details on the input/output alternate function characteristics (NSS, SCK, MOSI, MISO).

Table 72. SPI characteristics in voltage Range 1 (1)

Symbol	Parameter	Conditions	Min	Typ	Max	Unit
f_{SCK} $1/t_{c(SCK)}$	SPI clock frequency	Master mode	-	-	16	MHz
		Slave mode receiver			16	
		Slave mode Transmitter 1.71<V_{DD}<3.6V	-	-	12(2)	
		Slave mode Transmitter 2.7<V_{DD}<3.6V	-	-	16(2)	
$Duty_{(SCK)}$	Duty cycle of SPI clock frequency	Slave mode	30	50	70	%

Table 72. SPI characteristics in voltage Range 1 (1) (continued)

Symbol	Parameter	Conditions	Min	Typ	Max	Unit
$t_{su(NSS)}$	NSS setup time	Slave mode, SPI presc = 2	4*Tpclk	-	-	ns
$t_{h(NSS)}$	NSS hold time	Slave mode, SPI presc = 2	2*Tpclk	-	-	
$t_{w(SCKH)}$ $t_{w(SCKL)}$	SCK high and low time	Master mode	Tpclk-2	Tpclk	Tpclk+ 2	
$t_{su(MI)}$	Data input setup time	Master mode	0	-	-	
$t_{su(SI)}$		Slave mode	3	-	-	
$t_{h(MI)}$	Data input hold time	Master mode	7	-	-	
$t_{h(SI)}$		Slave mode	3.5	-	-	
$t_{a(SO}$	Data output access time	Slave mode	15	-	36	
$t_{dis(SO)}$	Data output disable time	Slave mode	10	-	30	
$t_{v(SO)}$	Data output valid time	Slave mode 1.65 V<V_{DD}<3.6 V	-	18	41	
		Slave mode 2.7 V<V_{DD}<3.6 V	-	18	25	
$t_{v(MO)}$		Master mode	-	4	7	
$t_{h(SO)}$	Data output hold time	Slave mode	10	-	-	
$t_{h(MO)}$		Master mode	0	-	-	

1. Guaranteed by characterization results.
2. The maximum SPI clock frequency in slave transmitter mode is determined by the sum of $t_{v(SO)}$ and $t_{su(MI)}$ which has to fit into SCK low or high phase preceding the SCK sampling edge. This value can be achieved when the SPI communicates with a master having $t_{su(MI)}$ = 0 while $Duty_{(SCK)}$ = 50%.

Table 73. SPI characteristics in voltage Range 2 (1)

Symbol	Parameter	Conditions	Min	Typ	Max	Unit
f_{SCK} $1/t_{c(SCK)}$	SPI clock frequency	Master mode	-	-	8	MHz
		Slave mode Transmitter $1.65<V_{DD}<3.6V$			8	
		Slave mode Transmitter $2.7<V_{DD}<3.6V$			8(2)	
$Duty_{(SCK)}$	Duty cycle of SPI clock frequency	Slave mode	30	50	70	%
$t_{su(NSS)}$	NSS setup time	Slave mode, SPI presc = 2	4*Tpclk	-	-	ns
$t_{h(NSS)}$	NSS hold time	Slave mode, SPI presc = 2	2*Tpclk	-	-	
$t_{w(SCKH)}$ $t_{w(SCKL)}$	SCK high and low time	Master mode	Tpclk-2	Tpclk	Tpclk+2	
$t_{su(MI)}$	Data input setup time	Master mode	0	-	-	
$t_{su(SI)}$		Slave mode	3	-	-	
$t_{h(MI)}$	Data input hold time	Master mode	11	-	-	
$t_{h(SI)}$		Slave mode	4.5	-	-	
$t_{a(SO}$	Data output access time	Slave mode	18	-	52	
$t_{dis(SO)}$	Data output disable time	Slave mode	12	-	42	
$t_{v(SO)}$	Data output valid time	Slave mode	-	20	56.5	
$t_{v(MO)}$		Master mode	-	5	9	
$t_{h(SO)}$	Data output hold time	Slave mode	13	-	-	
$t_{h(MO)}$		Master mode	3	-	-	

1. Guaranteed by characterization results.
2. The maximum SPI clock frequency in slave transmitter mode is determined by the sum of $t_{v(SO)}$ and $t_{su(MI)}$ which has to fit into SCK low or high phase preceding the SCK sampling edge. This value can be achieved when the SPI communicates with a master having $t_{su(MI)}$ = 0 while $Duty_{(SCK)}$ = 50%.

Table 74. SPI characteristics in voltage Range 3 (1)

Symbol	Parameter	Conditions	Min	Typ	Max	Unit
f_{SCK} $1/t_{c(SCK)}$	SPI clock frequency	Master mode	-	-	2	MHz
		Slave mode			2(2)	
$Duty_{(SCK)}$	Duty cycle of SPI clock frequency	Slave mode	30	50	70	%
$t_{su(NSS)}$	NSS setup time	Slave mode, SPI presc = 2	4*Tpclk	-	-	ns
$t_{h(NSS)}$	NSS hold time	Slave mode, SPI presc = 2	2*Tpclk	-	-	
$t_{w(SCKH)}$ $t_{w(SCKL)}$	SCK high and low time	Master mode	Tpclk-2	Tpclk	Tpclk+2	
$t_{su(MI)}$	Data input setup time	Master mode	1.5	-	-	
$t_{su(SI)}$		Slave mode	6	-	-	
$t_{h(MI)}$	Data input hold time	Master mode	13.5	-	-	
$t_{h(SI)}$		Slave mode	16	-	-	
$t_{a(SO}$	Data output access time	Slave mode	30	-	70	
$t_{dis(SO)}$	Data output disable time	Slave mode	40	-	80	
$t_{v(SO)}$	Data output valid time	Slave mode	-	30	70	
$t_{v(MO)}$		Master mode	-	7	9	
$t_{h(SO)}$	Data output hold time	Slave mode	25	-	-	
$t_{h(MO)}$		Master mode	8	-	-	

1. Guaranteed by characterization results.
2. The maximum SPI clock frequency in slave transmitter mode is determined by the sum of $t_{v(SO)}$ and $t_{su(MI)}$ which has to fit into SCK low or high phase preceding the SCK sampling edge. This value can be achieved when the SPI communicates with a master having $t_{su(MI)}$ = 0 while $Duty_{(SCK)}$ = 50%.

Figure 31. SPI timing diagram - slave mode and CPHA = 0

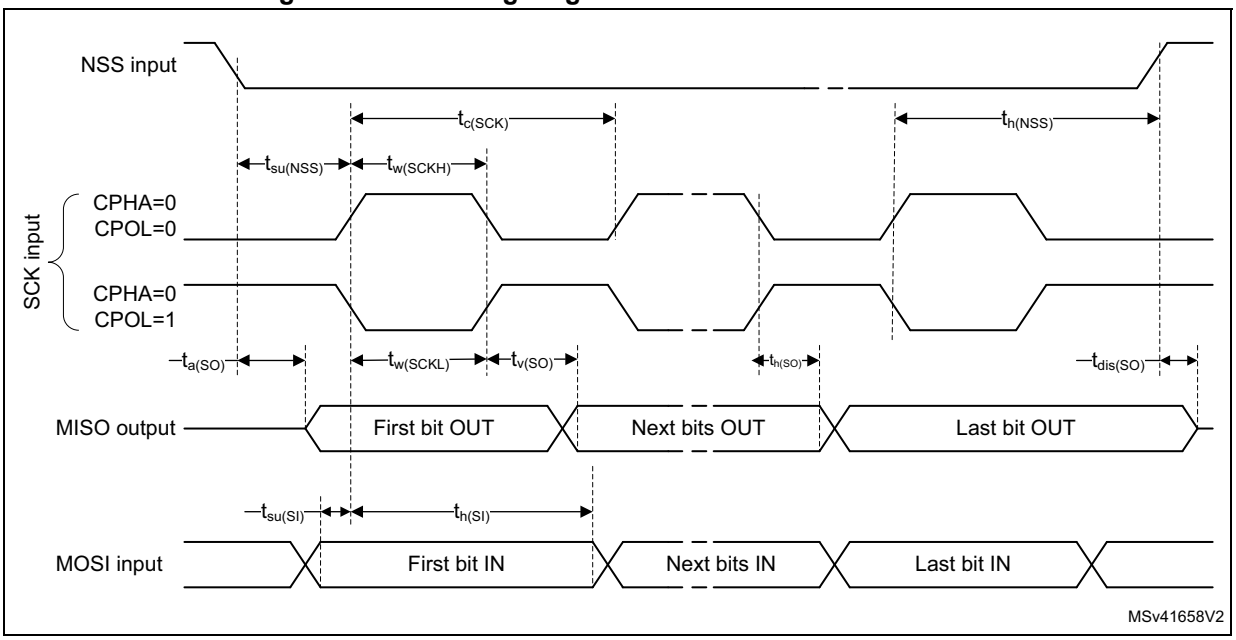

Figure 32. SPI timing diagram - slave mode and CPHA = 1

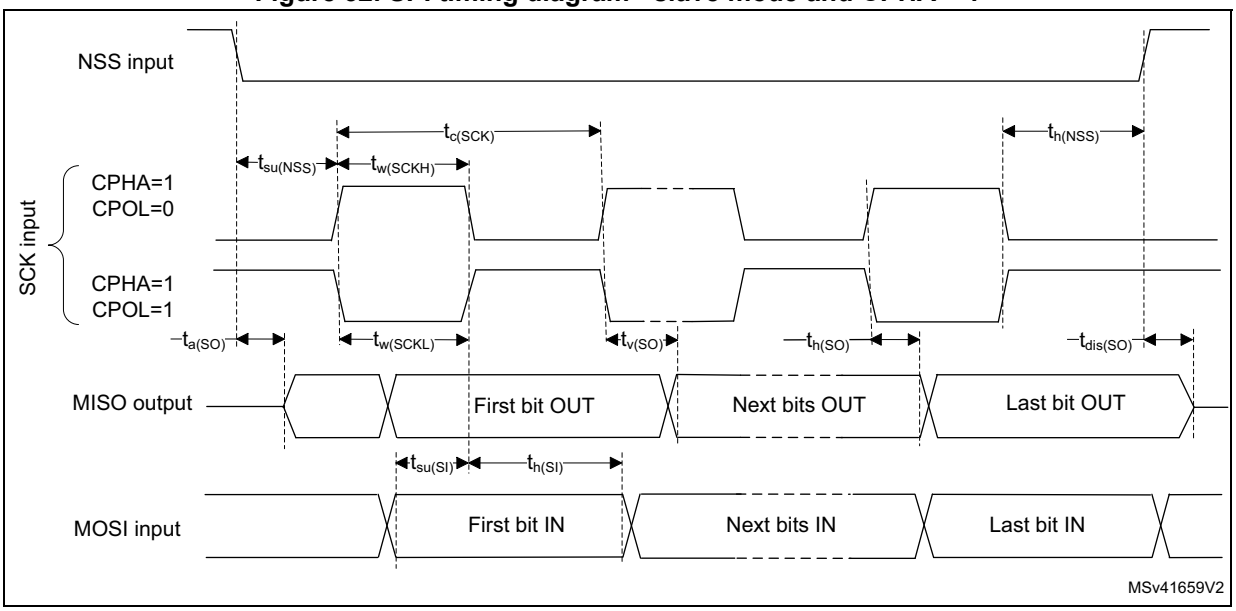

Figure 33. SPI timing diagram - master mode

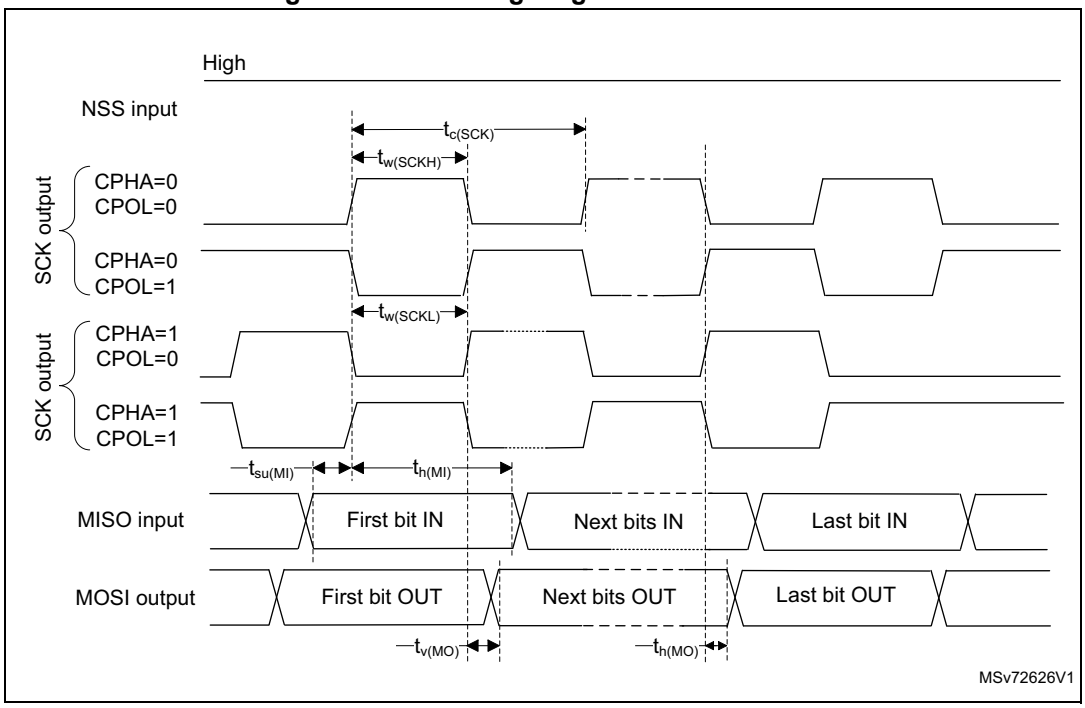

I2S characteristics

Table 75. I2S characteristics(1)

Symbol	Parameter	Conditions	Min	Max	Unit
f_{MCK}	I2S Main clock output	-	256 x 8K	256xFs (2)	MHz
f_{CK}	I2S clock frequency	Master data: 32 bits	-	64xFs	MHz
		Slave data: 32 bits	-	64xFs	
D_{CK}	I2S clock frequency duty cycle	Slave receiver	30	70	%
$t_{v(WS)}$	WS valid time	Master mode	-	15	ns
$t_{h(WS)}$	WS hold time	Master mode	11	-	
$t_{su(WS)}$	WS setup time	Slave mode	6	-	
$t_{h(WS)}$	WS hold time	Slave mode	2	-	
$t_{su(SD_MR)}$	Data input setup time	Master receiver	0	-	
$t_{su(SD_SR)}$		Slave receiver	6.5	-	
$t_{h(SD_MR)}$	Data input hold time	Master receiver	18	-	
$t_{h(SD_SR)}$		Slave receiver	15.5	-	
$t_{v(SD_ST)}$	Data output valid time	Slave transmitter (after enable edge)	-	77	
$t_{v(SD_MT)}$		Master transmitter (after enable edge)	-	8	
$t_{h(SD_ST)}$	Data output hold time	Slave transmitter (after enable edge)	18	-	
$t_{h(SD_MT)}$		Master transmitter (after enable edge)	1.5	-	

1. Guaranteed by characterization results.
2. 256xFs maximum value is equal to the maximum clock frequency.

*Note: Refer to the I2S section of the product reference manual for more details about the sampling frequency (Fs), f_{MCK}, f_{CK} and D_{CK} values. These values reflect only the digital peripheral behavior, source clock precision might slightly change them. DCK depends mainly on the ODD bit value, digital contribution leads to a min of (I2SDIV/(2*I2SDIV+ODD) and a max of (I2SDIV+ODD)/(2*I2SDIV+ODD). Fs max is supported for each mode/condition.*

Figure 34. I²S slave timing diagram (Philips protocol)(1)

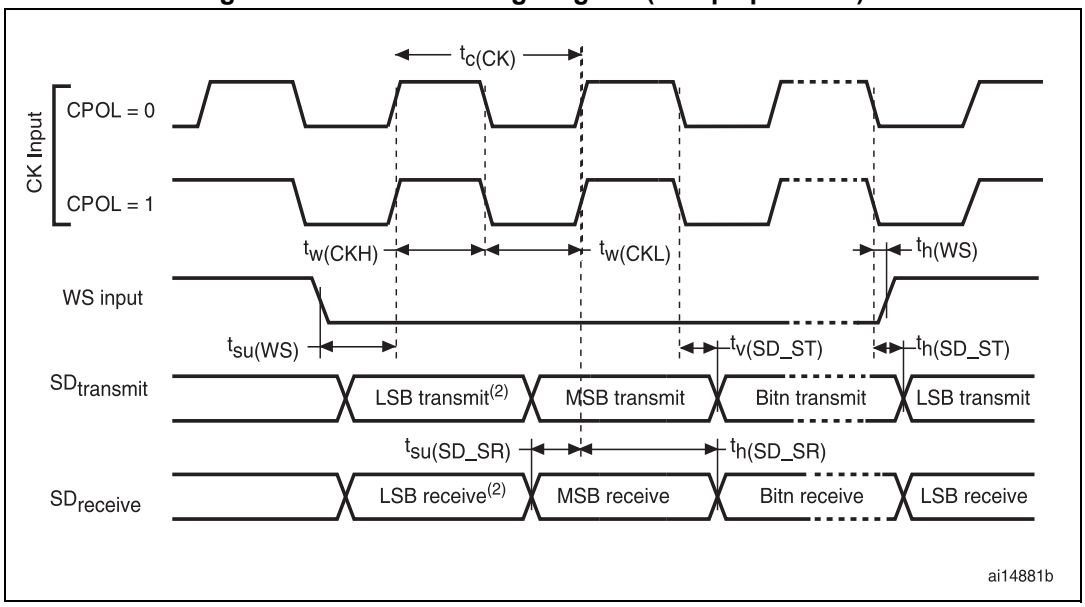

1. Measurement points are done at CMOS levels: $0.3 \times V_{DD}$ and $0.7 \times V_{DD}$.
2. LSB transmit/receive of the previously transmitted byte. No LSB transmit/receive is sent before the first byte.

Figure 35. I²S master timing diagram (Philips protocol)(1)

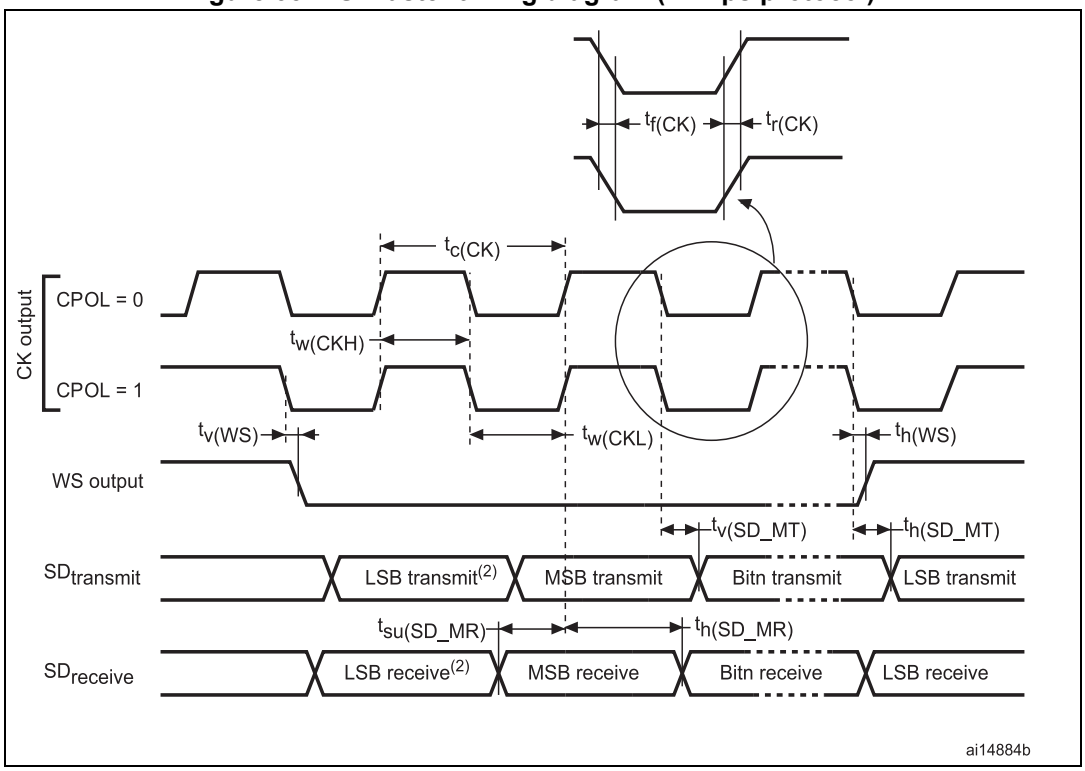

1. Guaranteed by characterization results.
2. LSB transmit/receive of the previously transmitted byte. No LSB transmit/receive is sent before the first byte.

USB characteristics

The USB interface is USB-IF certified (full speed).

Table 76. USB startup time

Symbol	Parameter	Max	Unit
$t_{STARTUP}$(1)	USB transceiver startup time	1	µs

1. Guaranteed by design.

Table 77. USB DC electrical characteristics

Symbol	Parameter	Conditions	Min.(1)	Max.(1)	Unit
Input levels					
V_{DD}	USB operating voltage	-	3.0	3.6	V
V_{DI}(2)	Differential input sensitivity	I(USB_DP, USB_DM)	0.2	-	V
V_{CM}(2)	Differential common mode range	Includes V_{DI} range	0.8	2.5	
V_{SE}(2)	Single ended receiver threshold	-	1.3	2.0	
Output levels					
V_{OL}(3)	Static output level low	R_L of 1.5 kΩ to 3.6 V(4)	-	0.3	V
V_{OH}(3)	Static output level high	R_L of 15 kΩ to V_{SS}(4)	2.8	3.6	

1. All the voltages are measured from the local ground potential.
2. Guaranteed by characterization results.
3. Guaranteed by test in production.
4. R_L is the load connected on the USB drivers.

Figure 36. USB timings: definition of data signal rise and fall time

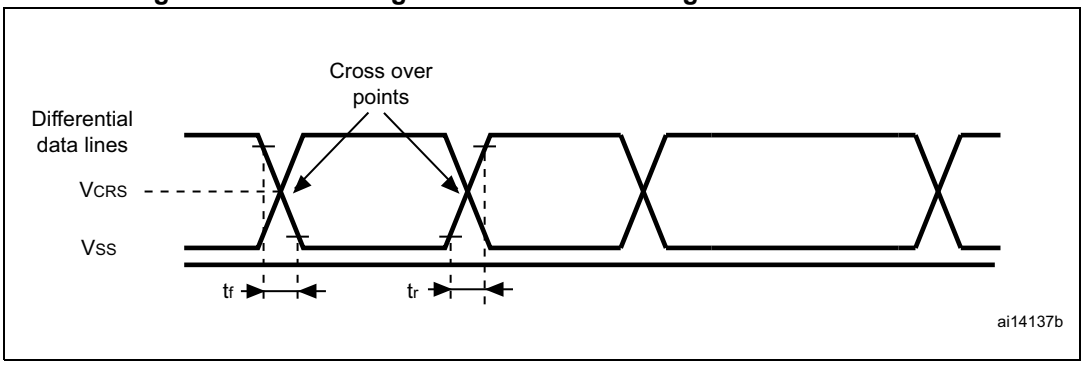

Table 78. USB: full speed electrical characteristics

Driver characteristics[1]					
Symbol	**Parameter**	**Conditions**	**Min**	**Max**	**Unit**
t_r	Rise time[2]	C_L = 50 pF	4	20	ns
t_f	Fall Time[2]	C_L = 50 pF	4	20	ns
t_{rfm}	Rise/ fall time matching	t_r/t_f	90	110	%
V_{CRS}	Output signal crossover voltage		1.3	2.0	V

1. Guaranteed by design.
2. Measured from 10% to 90% of the data signal. For more detailed informations, please refer to USB Specification - Chapter 7 (version 2.0).

6.3.21 LCD controller

The devices embed a built-in step-up converter to provide a constant LCD reference voltage independently from the V_{DD} voltage. An external capacitor C_{ext} must be connected to the V_{LCD} pin to decouple this converter.

Table 79. LCD controller characteristics

Symbol	Parameter	Min	Typ	Max	Unit
V_{LCD}	LCD external voltage	-	-	3.6	V
V_{LCD0}	LCD internal reference voltage 0	-	2.6	-	
V_{LCD1}	LCD internal reference voltage 1	-	2.73	-	
V_{LCD2}	LCD internal reference voltage 2	-	2.86	-	
V_{LCD3}	LCD internal reference voltage 3	-	2.98	-	
V_{LCD4}	LCD internal reference voltage 4	-	3.12	-	
V_{LCD5}	LCD internal reference voltage 5	-	3.26	-	
V_{LCD6}	LCD internal reference voltage 6	-	3.4	-	
V_{LCD7}	LCD internal reference voltage 7	-	3.55	-	
C_{ext}	V_{LCD} external capacitance	0.1	-	2	µF
I_{LCD}[1]	Supply current at V_{DD} = 2.2 V	-	3.3	-	µA
	Supply current at V_{DD} = 3.0 V	-	3.1	-	
R_{Htot}[2]	Low drive resistive network overall value	5.28	6.6	7.92	MΩ
R_L[2]	High drive resistive network total value	192	240	288	kΩ
V_{44}	Segment/Common highest level voltage	-	-	V_{LCD}	V

Table 79. LCD controller characteristics (continued)

Symbol	Parameter	Min	Typ	Max	Unit
V_{34}	Segment/Common 3/4 level voltage	-	3/4 V_{LCD}	-	V
V_{23}	Segment/Common 2/3 level voltage	-	2/3 V_{LCD}	-	
V_{12}	Segment/Common 1/2 level voltage	-	1/2 V_{LCD}	-	
V_{13}	Segment/Common 1/3 level voltage	-	1/3 V_{LCD}	-	
V_{14}	Segment/Common 1/4 level voltage	-	1/4 V_{LCD}	-	
V_0	Segment/Common lowest level voltage	0	-	-	
ΔVxx(3)	Segment/Common level voltage error T_A = -40 to 85 °C	-	-	±50	mV

1. LCD enabled with 3 V internal step-up active, 1/8 duty, 1/4 bias, division ratio= 64, all pixels active, no LCD connected.
2. Guaranteed by design.
3. Guaranteed by characterization results.

7 Package information

In order to meet environmental requirements, ST offers these devices in different grades of ECOPACK packages, depending on their level of environmental compliance. ECOPACK specifications, grade definitions and product status *are available at www.st.com.* ECOPACK is an ST trademark.

7.1 Device marking

Refer to technical note “Reference device marking schematics for STM32 microcontrollers and microprocessors” (TN1433) available on *www.st.com*, for the location of pin 1 / ball A1 as well as the location and orientation of the marking areas versus pin 1 / ball A1.

Parts marked as “ES”, “E” or accompanied by an engineering sample notification letter, are not yet qualified and therefore not approved for use in production. ST is not responsible for any consequences resulting from such use. In no event will ST be liable for the customer using any of these engineering samples in production. ST’s Quality department must be contacted prior to any decision to use these engineering samples to run a qualification activity.

A WLCSP simplified marking example (if any) is provided in the corresponding package information subsection.

7.2 LQFP64 package information (5W)

This LQFP is 64-pin, 10 x 10 mm low-profile quad flat package.

Note: See list of notes in the notes section.

Figure 37. LQFP64 - Outline(15)

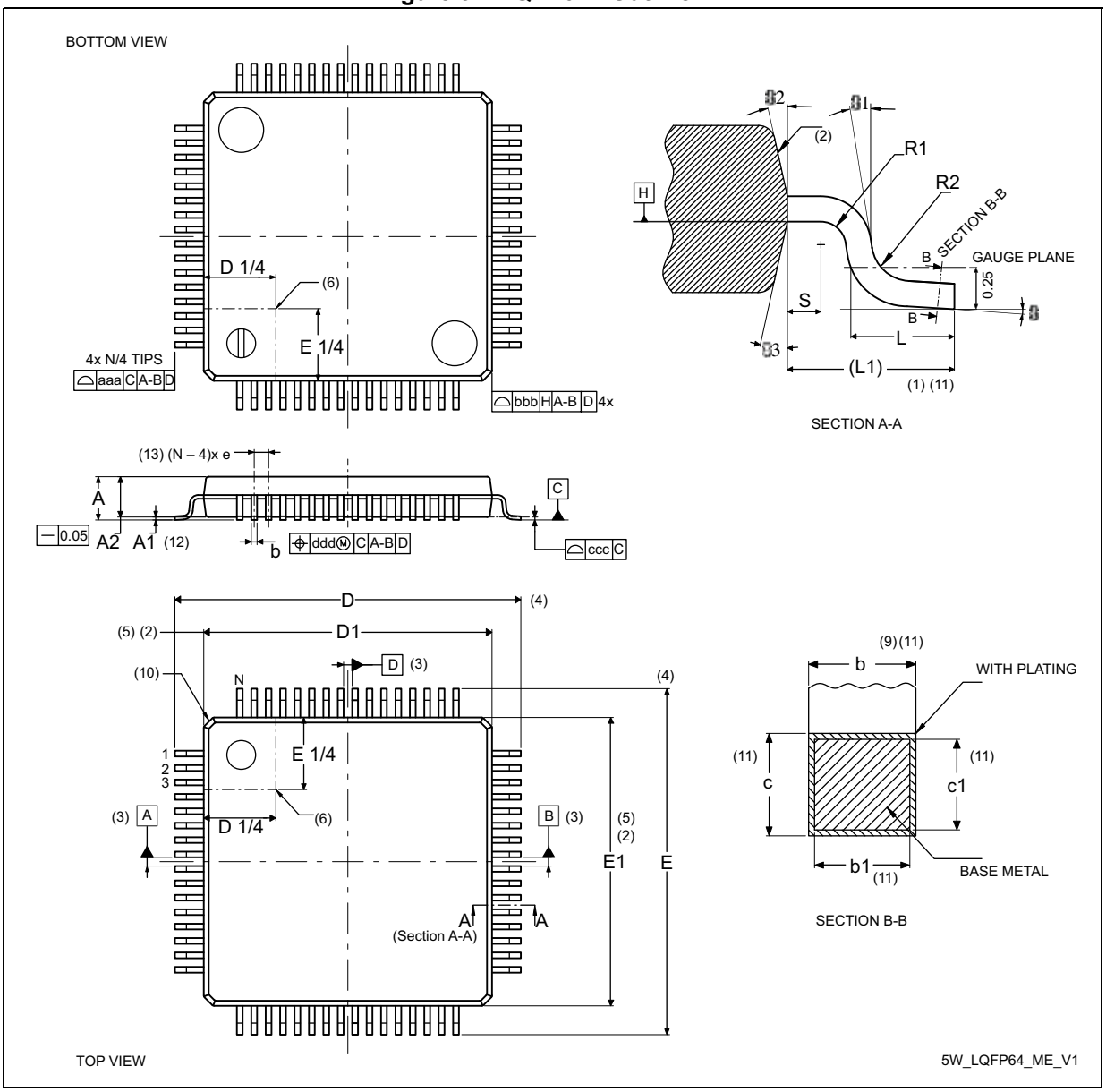

Table 80. LQFP64 - Mechanical data

Symbol	millimeters			inches[14]		
	Min	Typ	Max	Min	Typ	Max
A	-	-	1.60	-	-	0.0630
A1[12]	0.05	-	0.15	0.0020	-	0.0059
A2	1.35	1.40	1.45	0.0531	0.0551	0.0570
b[9][11]	0.17	0.22	0.27	0.0067	0.0087	0.0106
b1[11]	0.17	0.20	0.23	0.0067	0.0079	0.0091
c[11]	0.09	-	0.20	0.0035	-	0.0079
c1[11]	0.09	-	0.16	0.0035	-	0.0063
D[4]	12.00 BSC			0.4724 BSC		
D1[2][5]	10.00 BSC			0.3937 BSC		
E[4]	12.00 BSC			0.4724 BSC		
E1[2][5]	10.00 BSC			0.3937 BSC		
e	0.50 BSC			0.1970 BSC		
L	0.45	0.60	0.75	0.0177	0.0236	0.0295
L1	1.00 REF			0.0394 REF		
N[13]	64					
θ	0°	3.5°	7°	0°	3.5°	7°
θ1	0°	-	-	0°	-	-
θ2	10°	12°	14°	10°	12°	14°
θ3	10°	12°	14°	10°	12°	14°
R1	0.08	-	-	0.0031	-	-
R2	0.08	-	0.20	0.0031	-	0.0079
S	0.20	-	-	0.0079	-	-
aaa[1]	0.20			0.0079		
bbb[1]	0.20			0.0079		
ccc[1]	0.08			0.0031		
ddd[1]	0.08			0.0031		

Notes:

1. Dimensioning and tolerancing schemes conform to ASME Y14.5M-1994.
2. The Top package body size may be smaller than the bottom package size by as much as 0.15 mm.
3. Datums A-B and D to be determined at datum plane H.
4. To be determined at seating datum plane C.
5. Dimensions D1 and E1 do not include mold flash or protrusions. Allowable mold flash or protrusions is “0.25 mm” per side. D1 and E1 are Maximum plastic body size dimensions including mold mismatch.
6. Details of pin 1 identifier are optional but must be located within the zone indicated.
7. All Dimensions are in millimeters.
8. No intrusion allowed inwards the leads.
9. Dimension “b” does not include dambar protrusion. Allowable dambar protrusion shall not cause the lead width to exceed the maximum “b” dimension by more than 0.08 mm. Dambar cannot be located on the lower radius or the foot. Minimum space between protrusion and an adjacent lead is 0.07 mm for 0.4 mm and 0.5 mm pitch packages.
10. Exact shape of each corner is optional.
11. These dimensions apply to the flat section of the lead between 0.10 mm and 0.25 mm from the lead tip.
12. A1 is defined as the distance from the seating plane to the lowest point on the package body.
13. “N” is the number of terminal positions for the specified body size.
14. Values in inches are converted from mm and rounded to 4 decimal digits.
15. Drawing is not to scale.

Figure 38. LQFP64 - Recommended footprint

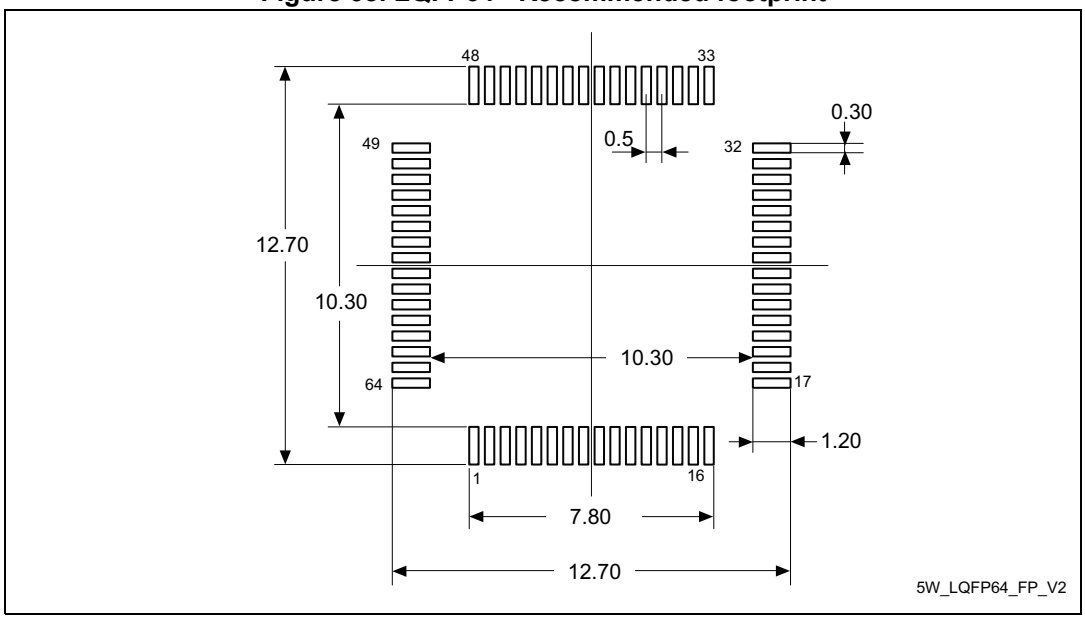

1. Dimensions are expressed in millimeters.

Device marking for LQFP64

The following figure gives an example of topside marking versus pin 1 position identifier location.

The printed markings may differ depending on the supply chain.

Other optional marking or inset/upset marks, which depend on supply chain operations, are not indicated below.

Figure 39. LQFP64 marking example (package top view)

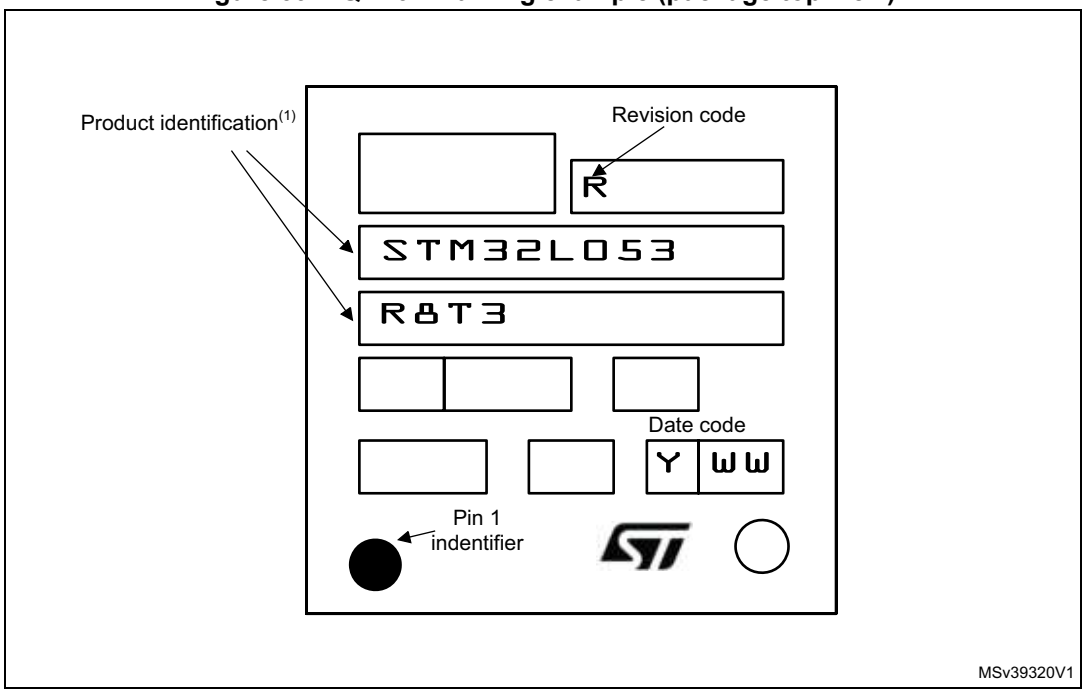

1. Parts marked as “ES”, “E” or accompanied by an Engineering Sample notification letter, are not yet qualified and therefore not approved for use in production. ST is not responsible for any consequences resulting from such use. In no event will ST be liable for the customer using any of these engineering samples in production. ST’s Quality department must be contacted prior to any decision to use these engineering samples to run a qualification activity.

7.3 TFBGA64 package information (R8)

Figure 40. TFBGA64 – 64-ball, 5 x 5 mm, 0.5 mm pitch thin profile fine pitch ball grid array package outline

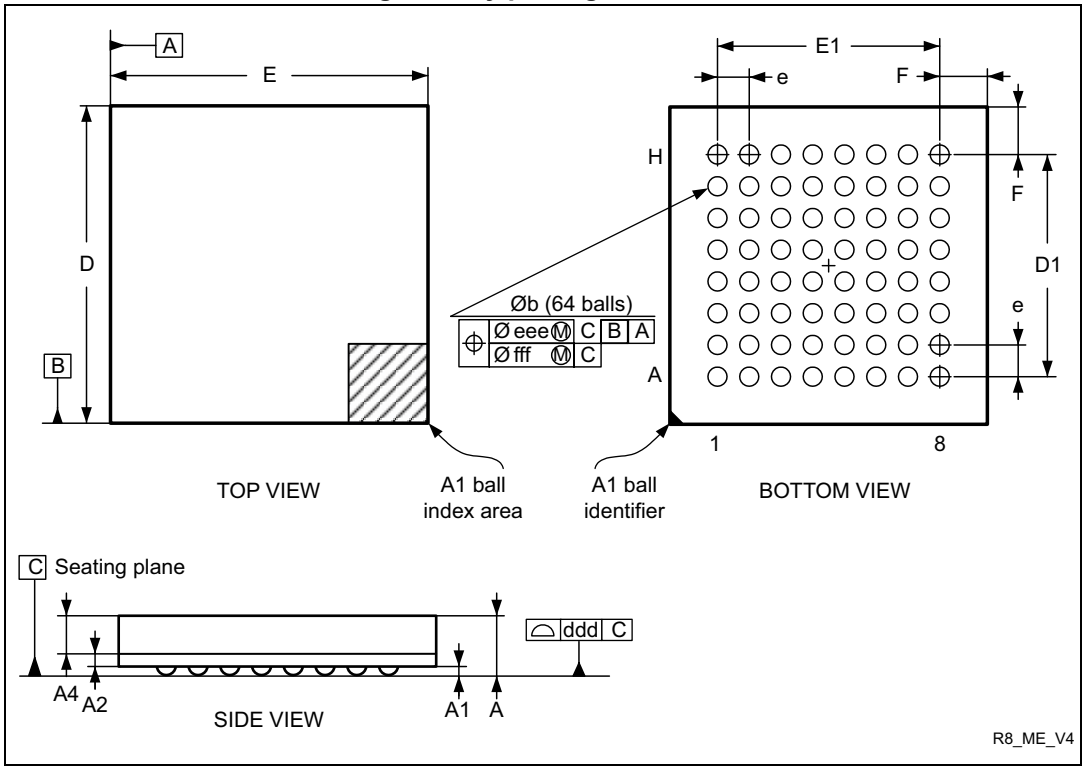

1. Drawing is not to scale.

Table 81. TFBGA64 – 64-ball, 5 x 5 mm, 0.5 mm pitch thin profile fine pitch ball grid array package outline

Symbol	millimeters			inches[1]		
	Min	Typ	Max	Min	Typ	Max
A	-	-	1.200	-	-	0.0472
A1	0.150	-	-	0.0059	-	-
A2	-	0.200	-	-	0.0079	-
A4	-	-	0.600	-	-	0.0236
b	0.250	0.300	0.350	0.0098	0.0118	0.0138
D	4.850	5.000	5.150	0.1909	0.1969	0.2028
D1	-	3.500	-	-	0.1378	-
E	4.850	5.000	5.150	0.1909	0.1969	0.2028
E1	-	3.500	-	-	0.1378	-
e	-	0.500	-	-	0.0197	-
F	-	0.750	-	-	0.0295	-

Table 81. TFBGA64 – 64-ball, 5 x 5 mm, 0.5 mm pitch thin profile fine pitch ball grid array package outline (continued)

Symbol	millimeters			inches[1]		
	Min	Typ	Max	Min	Typ	Max
ddd	-	-	0.080	-	-	0.0031
eee	-	-	0.150	-	-	0.0059
fff	-	-	0.050	-	-	0.0020

1. Values in inches are converted from mm and rounded to 4 decimal digits.

Figure 41. TFBGA64 – 64-ball, 5 x 5 mm, 0.5 mm pitch, thin profile fine pitch ball ,grid array recommended footprint

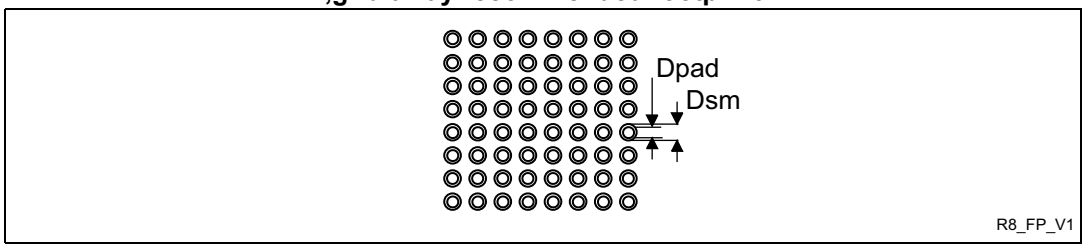

Table 82. TFBGA64 recommended PCB design rules (0.5 mm pitch BGA)

Dimension	Recommended values
Pitch	0.5
Dpad	0.280 mm
Dsm	0.370 mm typ. (depends on the soldermask registration tolerance)
Stencil opening	0.280 mm
Stencil thickness	Between 0.100 mm and 1.125 mm
Pad trace width	0.100 mm

Device marking for TFBGA64

The following figure gives an example of topside marking versus ball A 1 position identifier location.

The printed markings may differ depending on the supply chain.

Other optional marking or inset/upset marks, which depend on supply chain operations, are not indicated below.

Figure 42. TFBGA64 marking example (package top view)

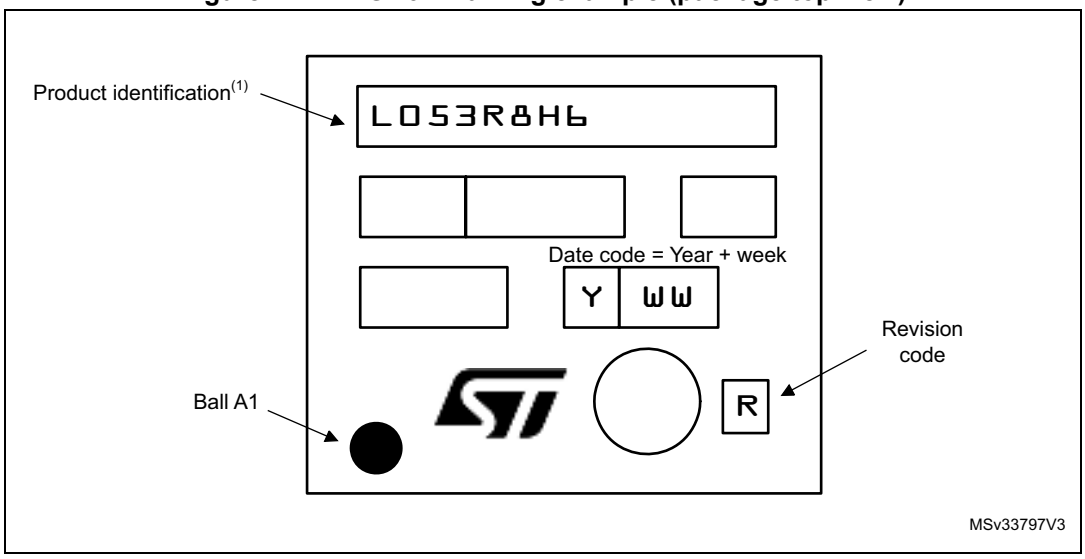

1. Parts marked as “ES”, “E” or accompanied by an Engineering Sample notification letter, are not yet qualified and therefore not approved for use in production. ST is not responsible for any consequences resulting from such use. In no event will ST be liable for the customer using any of these engineering samples in production. ST’s Quality department must be contacted prior to any decision to use these engineering samples to run a qualification activity.

7.4 LQFP48 package information (5B)

This LQFP is a 48-pin, 7 x 7 mm low-profile quad flat package

Note: See list of notes in the notes section.

Figure 43. LQFP48 – Outline(15)

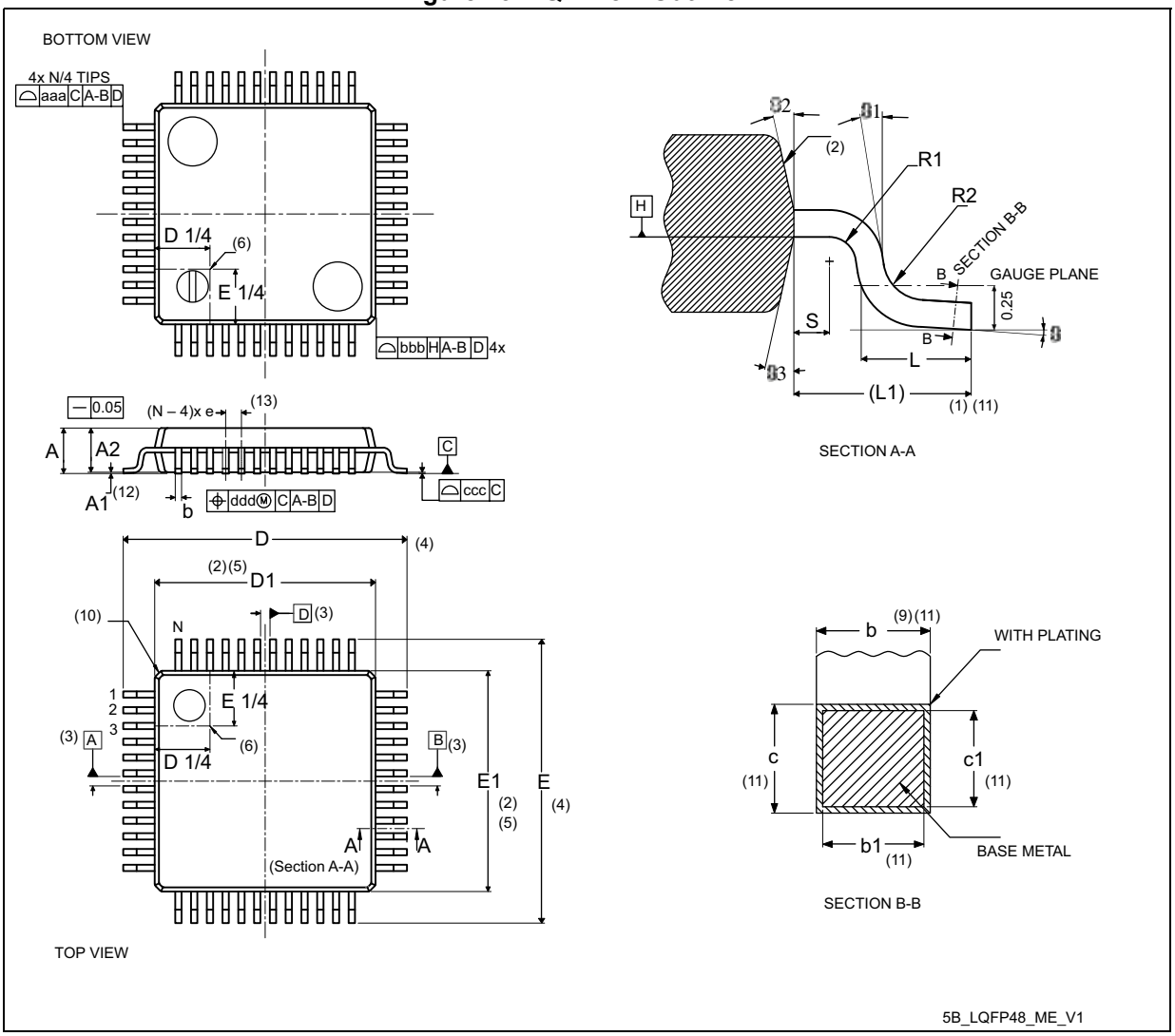

Table 83. LQFP48 – Mechanical data

Symbol	millimeters			inches[14]		
	Min	Typ	Max	Min	Typ	Max
A	-	-	1.60	-	-	0.0630
A1[12]	0.05	-	0.15	0.0020	-	0.0059
A2	1.35	1.40	1.45	0.0531	0.0551	0.0571
b[9][11]	0.17	0.22	0.27	0.0067	0.0087	0.0106
b1[11]	0.17	0.20	0.23	0.0067	0.0079	0.0090
c[11]	0.09	-	0.20	0.0035	-	0.0079
c1[11]	0.09	-	0.16	0.0035	-	0.0063
D[4]	9.00 BSC			0.3543 BSC		
D1[2][5]	7.00 BSC			0.2756 BSC		
E[4]	9.00 BSC			0.3543 BSC		
E1[2][5]	7.00 BSC			0.2756 BSC		
e	0.50 BSC			0.1970 BSC		
L	0.45	0.60	0.75	0.0177	0.0236	0.0295
L1	1.00 REF			0.0394 REF		
N[13]	48					
θ	0°	3.5°	7°	0°	3.5°	7°
θ1	0°	-	-	0°	-	-
θ2	10°	12°	14°	10°	12°	14°
θ3	10°	12°	14°	10°	12°	14°
R1	0.08	-	-	0.0031	-	-
R2	0.08	-	0.20	0.0031	-	0.0079
S	0.20	-	-	0.0079	-	-
aaa[1][7]	0.20			0.0079		
bbb[1][7]	0.20			0.0079		
ccc[1][7]	0.08			0.0031		
ddd[1][7]	0.08			0.0031		

Notes:

1. Dimensioning and tolerancing schemes conform to ASME Y14.5M-1994.
2. The Top package body size may be smaller than the bottom package size by as much as 0.15 mm.
3. Datums A-B and D to be determined at datum plane H.
4. To be determined at seating datum plane C.
5. Dimensions D1 and E1 do not include mold flash or protrusions. Allowable mold flash or protrusions is “0.25 mm” per side. D1 and E1 are Maximum plastic body size dimensions including mold mismatch.
6. Details of pin 1 identifier are optional but must be located within the zone indicated.
7. All Dimensions are in millimeters.
8. No intrusion allowed inwards the leads.
9. Dimension “b” does not include dambar protrusion. Allowable dambar protrusion shall not cause the lead width to exceed the maximum “b” dimension by more than 0.08 mm. Dambar cannot be located on the lower radius or the foot. Minimum space between protrusion and an adjacent lead is 0.07 mm for 0.4 mm and 0.5 mm pitch packages.
10. Exact shape of each corner is optional.
11. These dimensions apply to the flat section of the lead between 0.10 mm and 0.25 mm from the lead tip.
12. A1 is defined as the distance from the seating plane to the lowest point on the package body.
13. “N” is the number of terminal positions for the specified body size.
14. Values in inches are converted from mm and rounded to 4 decimal digits.
15. Drawing is not to scale.

Figure 44. LQFP48 – Recommended footprint

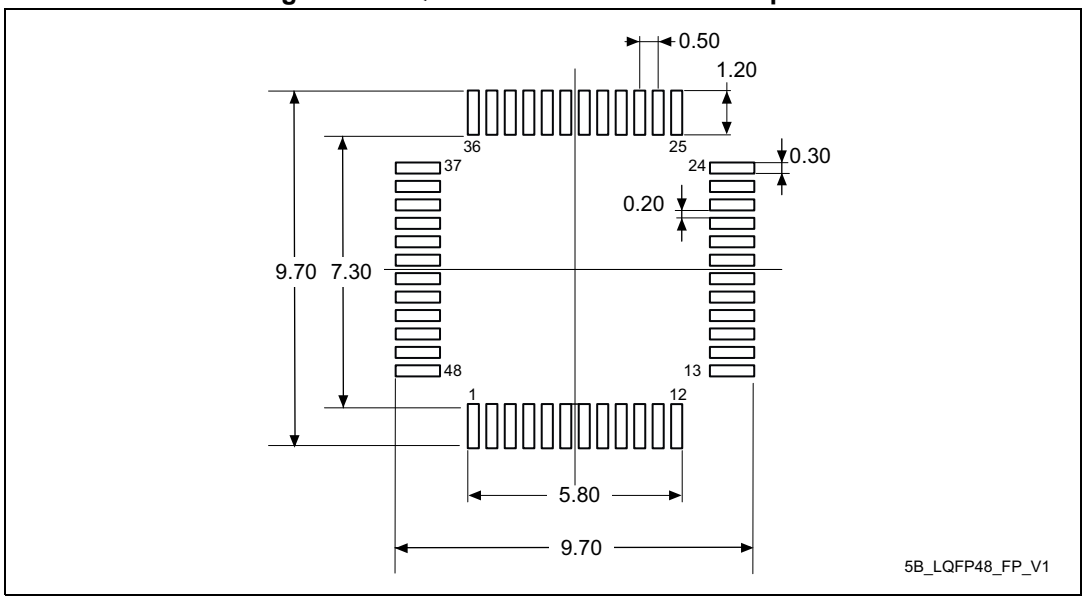

1. Dimensions are expressed in millimeters.

Device marking for LQFP48

The following figure gives an example of topside marking versus pin 1 position identifier location.

The printed markings may differ depending on the supply chain.

Other optional marking or inset/upset marks, which depend on supply chain operations, are not indicated below.

Figure 45. LQFP48 marking example (package top view)

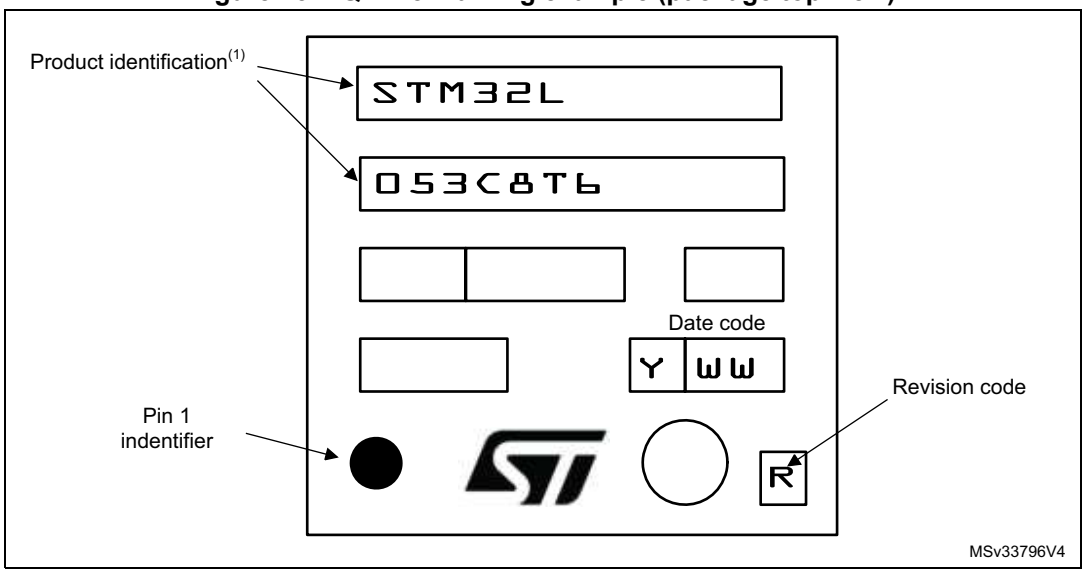

1. Parts marked as “ES”, “E” or accompanied by an Engineering Sample notification letter, are not yet qualified and therefore not approved for use in production. ST is not responsible for any consequences resulting from such use. In no event will ST be liable for the customer using any of these engineering samples in production. ST’s Quality department must be contacted prior to any decision to use these engineering samples to run a qualification activity.

7.5 UFQFPN48 package information (A0B9)

This UFQFPN is a 48-lead, 7 x 7 mm, 0.5 mm pitch, ultra thin fine pitch quad flat package.

Figure 46. UFQFPN48 – Outline

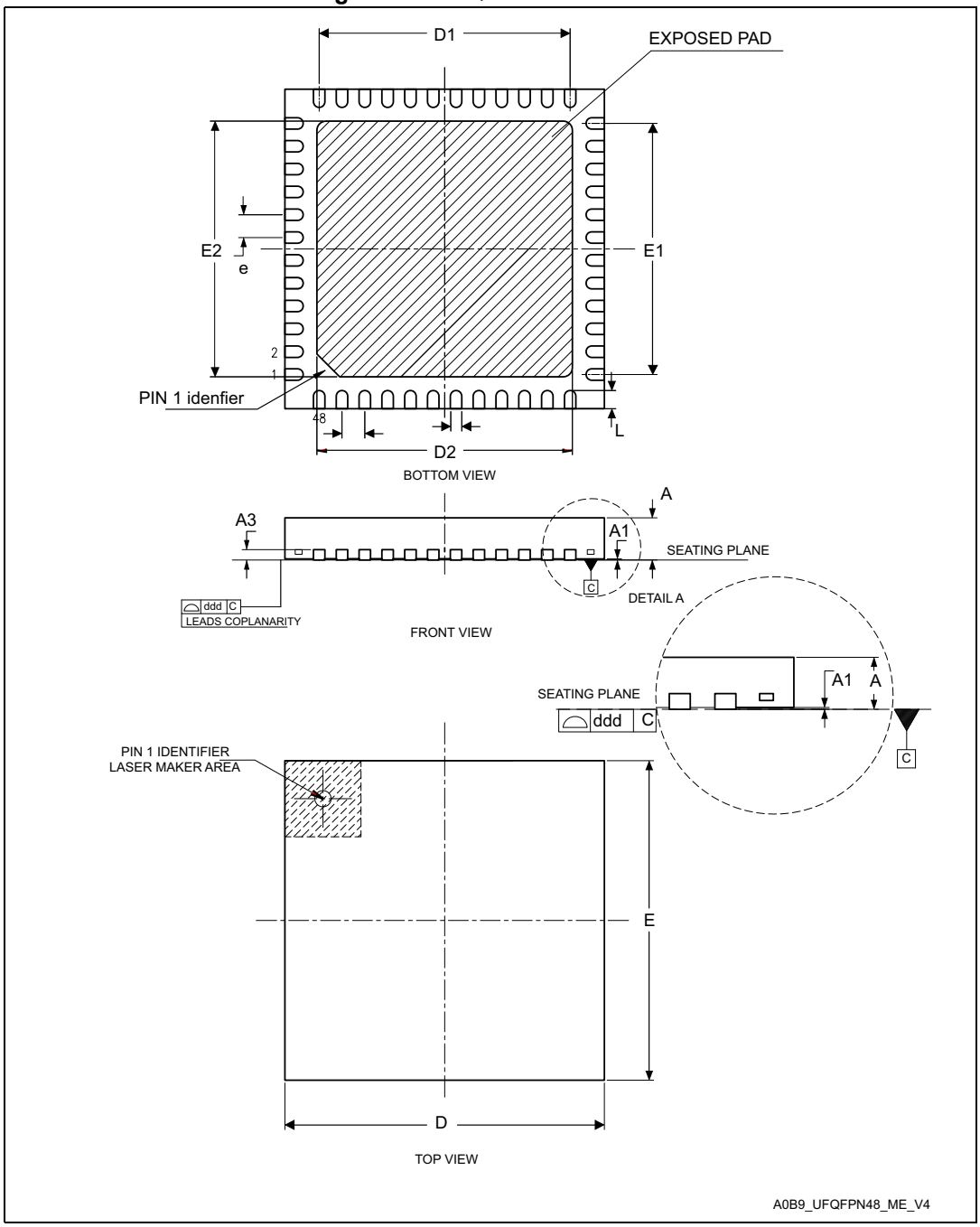

1. Drawing is not to scale.
2. All leads/pads should also be soldered to the PCB to improve the lead/pad solder joint life.
3. There is an exposed die pad on the underside of the UFQFPN48 package. It is recommended to connect and solder this back-side pad to PCB ground.

Table 84. UFQFPN48 – Mechanical data

Symbol	millimeters			inches[1]		
	Min	Typ	Max	Min	Typ	Max
A	0.500	0.550	0.600	0.0197	0.0217	0.0236
A1	0.000	0.020	0.050	0.0000	0.0008	0.0020
A3	-	0.152	-	-	0.0060	-
b	0.200	0.250	0.300	0.0079	0.0098	0.0118
D[2]	6.900	7.000	7.100	0.2717	0.2756	0.2795
D1	5.400	5.500	5.600	0.2126	0.2165	0.2205
D2[3]	5.500	5.600	5.700	0.2165	0.2205	0.2244
E[2]	6.900	7.000	7.100	0.2717	0.2756	0.2795
E1	5.400	5.500	5.600	0.2126	0.2165	0.2205
E2[3]	5.500	5.600	5.700	0.2165	0.2205	0.2244
e	-	0.500	-	-	0.0197	-
L	0.300	0.400	0.500	0.0118	0.0157	0.0197
ddd	-	-	0.080	-	-	0.0031

1. Values in inches are converted from mm and rounded to four decimal digits.
2. Dimensions D and E do not include mold protrusion, not exceed 0.15 mm.
3. Dimensions D2 and E2 are not in accordance with JEDEC.

Figure 47. UFQFPN48 – Footprint example

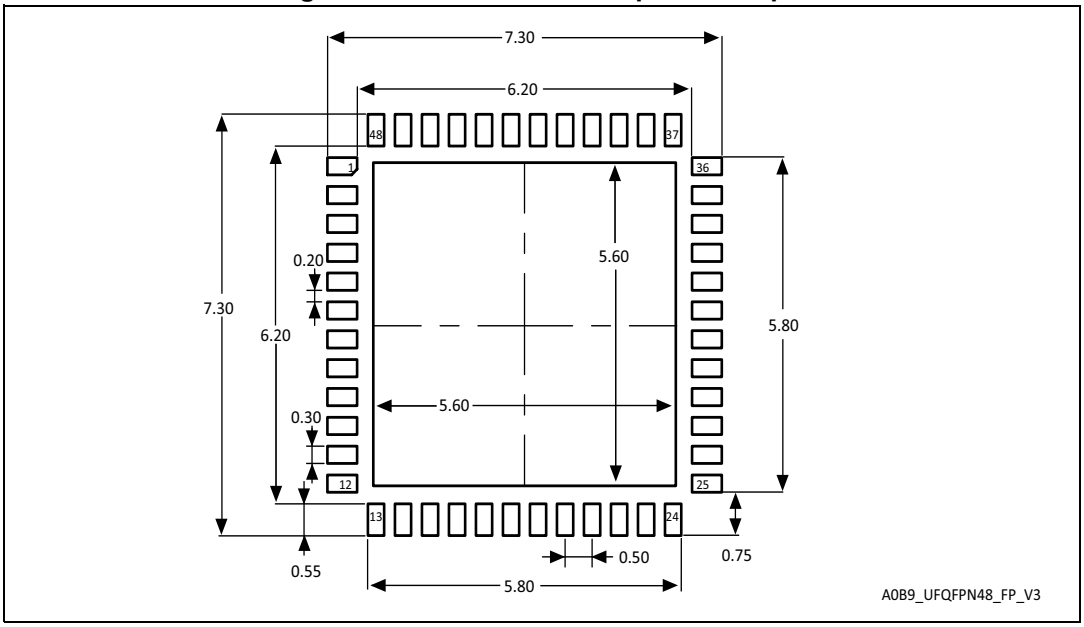

1. Dimensions are expressed in millimeters.

Device marking for UFQFPN48

The following figure gives an example of topside marking versus pin 1 position identifier location.

The printed markings may differ depending on the supply chain.

Other optional marking or inset/upset marks, which depend on supply chain operations, are not indicated below.

Figure 48. UFQFPN48 marking example (package top view)

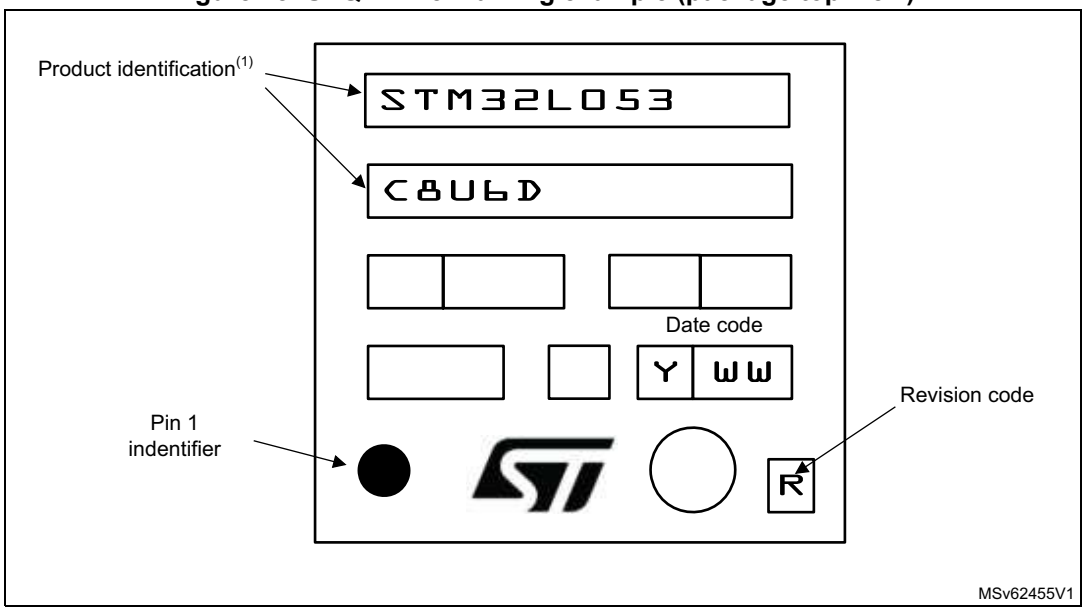

1. Parts marked as “ES”, “E” or accompanied by an Engineering Sample notification letter, are not yet qualified and therefore not approved for use in production. ST is not responsible for any consequences resulting from such use. In no event will ST be liable for the customer using any of these engineering samples in production. ST’s Quality department must be contacted prior to any decision to use these engineering samples to run a qualification activity.

7.6 Thermal characteristics

The maximum chip-junction temperature, T_J max, in degrees Celsius, may be calculated using the following equation:

T_J max = T_A max + (P_D max × Θ_{JA})

Where:

- T_A max is the maximum ambient temperature in °C,
- Θ_{JA} is the package junction-to-ambient thermal resistance, in °C/W,
- P_D max is the sum of P_{INT} max and $P_{I/O}$ max (P_D max = P_{INT} max + $P_{I/O}$max),
- P_{INT} max is the product of I_{DD} and V_{DD}, expressed in Watts. This is the maximum chip internal power.

$P_{I/O}$ max represents the maximum power dissipation on output pins where:

$P_{I/O}$ max = Σ (V_{OL} × I_{OL}) + Σ((V_{DD} – V_{OH}) × I_{OH}),

taking into account the actual V_{OL} / I_{OL} and V_{OH} / I_{OH} of the I/Os at low and high level in the application.

Table 85. Thermal characteristics

Symbol	Parameter	Value	Unit
Θ_{JA}	**Thermal resistance junction-ambient** TFBGA64 - 5 x 5 mm / 0.5 mm pitch	61	°C/W
	Thermal resistance junction-ambient LQFP64 - 10 x 10 mm / 0.5 mm pitch	45	
	Thermal resistance junction-ambient LQFP48 - 7 x 7 mm / 0.5 mm pitch	55	
	Thermal resistance junction-ambient UFQFPN48 - 7 x 7 mm / 0.5 mm pitch	31	

Figure 49. Thermal resistance

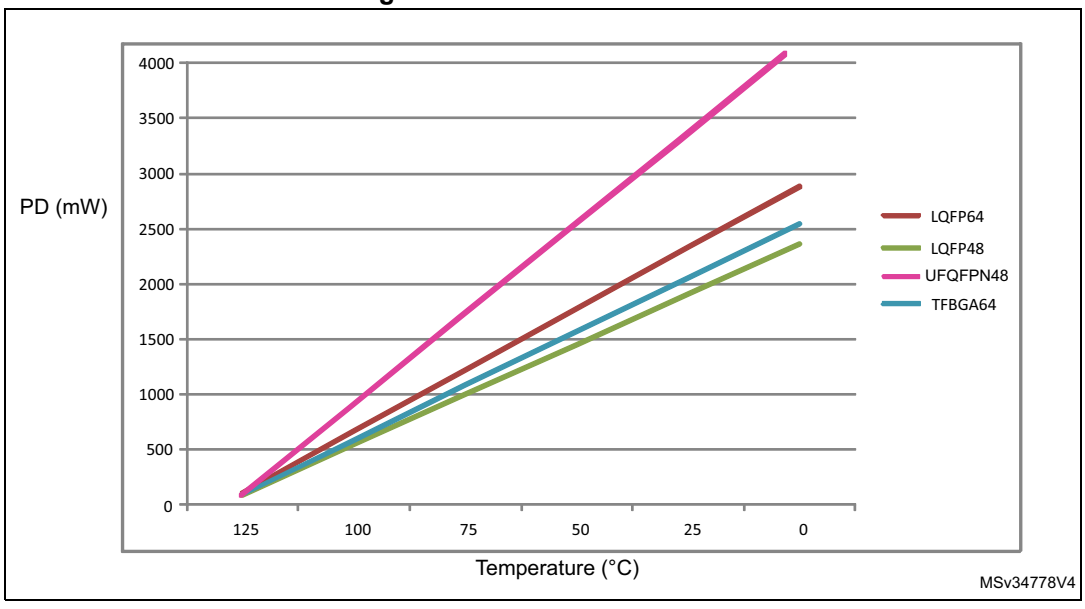

7.6.1 Reference document

JESD51-2 Integrated Circuits Thermal Test Method Environment Conditions - Natural Convection (Still Air). Available from www.jedec.org.

8 Ordering information

Example: STM32 L 053 R 8 T 6 D TR

Device family

STM32 = Arm-based 32-bit microcontroller

Product type

L = Low power

Device subfamily

053 = USB + LCD

Pin count

C = 48/49 pins

R = 64 pins

Flash memory size

6 = 32 Kbytes

8 = 64 Kbytes

Package

T = LQFP

H = TFBGA

U = UFQFPN

Temperature range

6 = Industrial temperature range, –40 to 85 °C

7 = Industrial temperature range, –40 to 105 °C

3 = Industrial temperature range, –40 to 125 °C

Options

No character = V_{DD} range: 1.8 to 3.6 V and BOR enabled

D = V_{DD} range: 1.65 to 3.6 V and BOR disabled

Packing

TR = tape and reel

No character = tray or tube

For a list of available options (speed, package, etc.) or for further information on any aspect of this device, please contact your nearest ST sales office.

9 Important security notice

The STMicroelectronics group of companies (ST) places a high value on product security, which is why the ST product(s) identified in this documentation may be certified by various security certification bodies and/or may implement our own security measures as set forth herein. However, no level of security certification and/or built-in security measures can guarantee that ST products are resistant to all forms of attacks. As such, it is the responsibility of each of ST's customers to determine if the level of security provided in an ST product meets the customer needs both in relation to the ST product alone, as well as when combined with other components and/or software for the customer end product or application. In particular, take note that:

- ST products may have been certified by one or more security certification bodies, such as Platform Security Architecture (www.psacertified.org) and/or Security Evaluation standard for IoT Platforms (www.trustcb.com). For details concerning whether the ST product(s) referenced herein have received security certification along with the level and current status of such certification, either visit the relevant certification standards website or go to the relevant product page on www.st.com for the most up to date information. As the status and/or level of security certification for an ST product can change from time to time, customers should re-check security certification status/level as needed. If an ST product is not shown to be certified under a particular security standard, customers should not assume it is certified.
- Certification bodies have the right to evaluate, grant and revoke security certification in relation to ST products. These certification bodies are therefore independently responsible for granting or revoking security certification for an ST product, and ST does not take any responsibility for mistakes, evaluations, assessments, testing, or other activity carried out by the certification body with respect to any ST product.
- Industry-based cryptographic algorithms (such as AES, DES, or MD5) and other open standard technologies which may be used in conjunction with an ST product are based on standards which were not developed by ST. ST does not take responsibility for any flaws in such cryptographic algorithms or open technologies or for any methods which have been or may be developed to bypass, decrypt or crack such algorithms or technologies.
- While robust security testing may be done, no level of certification can absolutely guarantee protections against all attacks, including, for example, against advanced attacks which have not been tested for, against new or unidentified forms of attack, or against any form of attack when using an ST product outside of its specification or intended use, or in conjunction with other components or software which are used by customer to create their end product or application. ST is not responsible for resistance against such attacks. As such, regardless of the incorporated security features and/or any information or support that may be provided by ST, each customer is solely responsible for determining if the level of attacks tested for meets their needs, both in relation to the ST product alone and when incorporated into a customer end product or application.
- All security features of ST products (inclusive of any hardware, software, documentation, and the like), including but not limited to any enhanced security features added by ST, are provided on an "AS IS" BASIS. AS SUCH, TO THE EXTENT PERMITTED BY APPLICABLE LAW, ST DISCLAIMS ALL WARRANTIES, EXPRESS OR IMPLIED, INCLUDING BUT NOT LIMITED TO THE IMPLIED WARRANTIES OF MERCHANTABILITY OR FITNESS FOR A PARTICULAR PURPOSE, unless the applicable written and signed contract terms specifically provide otherwise.

10 Revision history

Table 86. Document revision history

Date	Revision	Changes
07-Feb-2014	1	Initial release.
29-Apr-2014	2	Updated *Table 4: Functionalities depending on the working mode (from Run/active down to standby)*. Added *Section 3.2: Interconnect matrix*. Updated *Figure 4: STM32L053x6/8 TFBGA64 ballout*. Added VREF_OUT additional function to PB0 and PB1, replaced TTa I/O structure by TC, and updated PA0/4/5 and PC5/14 I/O structure, and added note 2 in *Table 15: STM32L053x6/8 pin definitions*. Updated *Table 24: General operating conditions*, *Table 21: Voltage characteristics* and *Table 22: Current characteristics*. Modified conditions in *Table 27: Embedded internal reference voltage*. Updated *Table 28: Current consumption in Run mode, code with data processing running from flash*, *Table 30: Current consumption in Run mode, code with data processing running from RAM*, *Table 32: Current consumption in Sleep mode*, *Table 33: Current consumption in Low-power run mode*, *Table 34: Current consumption in Low-power sleep mode*,*Table 35: Typical and maximum current consumptions in Stop mode* and *Table 36: Typical and maximum current consumptions in Standby mode*. Added *Figure 12: IDD vs VDD, at TA= 25/55/85/105 °C, Run mode, code running from flash memory, Range 2, HSE, 1WS*, *Figure 13: IDD vs VDD, at TA= 25/55/85/105 °C, Run mode, code running from flash memory, Range 2, HSI16, 1WS*, *Figure 14: IDD vs VDD, at TA= 25/55/ 85/105/125 °C, Low-power run mode, code running from RAM, Range 3, MSI (Range 0) at 64 KHz, 0 WS*, *Figure 15: IDD vs VDD, at TA= 25/55/ 85/105/125 °C, Stop mode with RTC enabled and running on LSE Low drive* and *Figure 16: IDD vs VDD, at TA= 25/55/85/105/125 °C, Stop mode with RTC disabled, all clocks OFF*. Updated *Table 43: HSE oscillator characteristics* and *Table 44: LSE oscillator characteristics*. Added *Figure 21: HSI16 minimum and maximum value versus temperature*. Updated *Table 55: ESD absolute maximum ratings*, *Table 57: I/O current injection susceptibility*, *Table 58: I/O static characteristics*. Added *Figure 22: VIH/VIL versus VDD (CMOS I/Os)* and *Figure 23: VIH/VIL versus VDD (TTL I/Os)*. Updated *Table 59: Output voltage characteristics*, *Table 60: I/O AC characteristics* and *Figure 24: I/O AC characteristics definition*. Updated *Table 62: ADC characteristics*, *Table 64: ADC accuracy*, and *Figure 27: Typical connection diagram using the ADC*. Updated *Table 66: Temperature sensor calibration values*. Updated *Table 72: SPI characteristics in voltage Range 1* and *Table 75: I2S characteristics*. Added *Figure 49: Thermal resistance*.

Table 86. Document revision history (continued)

Date	Revision	Changes
25-Jun-2014	3	ADC now guaranteed down to 1.65 V. Cover page: updated core speed, added minimum supply voltage for ADC, DAC and comparators. Updated list of applications in *Section 1: Introduction*. Changed number of I2S interfaces to one in *Section 2: Description*. Updated RTC/TIM21 in *Table 5: STM32L053x6/8 peripherals interconnect matrix*. Updated *Table 4: Functionalities depending on the working mode (from Run/active down to standby)*. Updated *Section 3.4.1: Power supply schemes*. Updated *Figure 4: STM32L053x6/8 TFBGA64 ballout*. Updated V_{DDA} in *Table 24: General operating conditions*. Divided Table *Current consumption in Run mode, code with data processing running from flash* into *Table 28* and *Table 29* and content updated. Divided Table *Current consumption in Run mode, code with data processing running from RAM* into *Table 30* and *Table 31* and content updated. Updated *Table 32: Current consumption in Sleep mode*, *Table 33: Current consumption in Low-power run mode*, *Table 34: Current consumption in Low-power sleep mode*, *Table 35: Typical and maximum current consumptions in Stop mode*, *Table 36: Typical and maximum current consumptions in Standby mode*, and added *Table 37: Average current consumption during wake-up*. Updated *Table 38: Peripheral current consumption in Run or Sleep mode* and added *Table 39: Peripheral current consumption in Stop and Standby mode*. Updated *Table 46: HSI48 oscillator characteristics*. Removed note 1 below *Figure 19: HSE oscillator circuit diagram*. Updated t_{LOCK} in *Table 49: PLL characteristics*. Updated *Table 51: Flash memory and data EEPROM characteristics* and *Table 52: Flash memory and data EEPROM endurance and retention*. Updated *Table 60: I/O AC characteristics*. Updated *Table 62: ADC characteristics*. Updated *Figure 49: Thermal resistance* and added note 1.

Table 86. Document revision history (continued)

Date	Revision	Changes
05-Sep-2014	4	Extended operating temperature range to 125 °C. Updated minimum ADC operating voltage to 1.65 V. Replaced USART3 by LPUART1 in *Table 15: STM32L053x6/8 pin definitions* and LPUART by LPUART1 in *Table 16: Alternate function port A*, *Table 17: Alternate function port B*, *Table 18: Alternate function port C*, *Table 19: Alternate function port D* and *Table 20: Alternate function port H*. Updated PA6 in *Table 16: Alternate function port A*. Updated temperature range in *Section 2: Description*, *Table 1: Ultra-low-power STM32L053x6/x8 device features and peripheral counts*. Updated P_D, $T_{A\ and}$ T_J to add range 3 in *Table 24: General operating conditions*. Added range 3 in *Table 51: Flash memory and data EEPROM characteristics*, *Table 52: Flash memory and data EEPROM endurance and retention*. Update note 1 in *Table 28: Current consumption in Run mode, code with data processing running from flash*, *Table 30: Current consumption in Run mode, code with data processing running from RAM*, *Table 32: Current consumption in Sleep mode*, *Table 33: Current consumption in Low-power run mode*, *Table 34: Current consumption in Low-power sleep mode*, *Table 35: Typical and maximum current consumptions in Stop mode*, *Table 36: Typical and maximum current consumptions in Standby mode* and *Table 40: Low-power mode wake-up timings*. Updated *Figure 49: Thermal resistance* and removed note 1. Updated *Figure 14: IDD vs VDD, at TA= 25/55/ 85/105/125 °C, Low-power run mode, code running from RAM, Range 3, MSI (Range 0) at 64 KHz, 0 WS*, *Figure 15: IDD vs VDD, at TA= 25/55/ 85/105/125 °C, Stop mode with RTC enabled and running on LSE Low drive*, *Figure 16: IDD vs VDD, at TA= 25/55/85/105/125 °C, Stop mode with RTC disabled, all clocks OFF*. Updated *Table 36: Typical and maximum current consumptions in Standby mode*. Updated SYSCFG in *Table 38: Peripheral current consumption in Run or Sleep mode*. Updated *Table 39: Peripheral current consumption in Stop and Standby mode* and *Table 40: Low-power mode wake-up timings*. Updated ACC_{HSI16} temperature conditions in *Table 45: 16 MHz HSI16 oscillator characteristics*. Changed ambient temperature range in note 1 below *Table 46: HSI48 oscillator characteristics*. Updated $V_{F(NRST)}$ and $V_{NF(NRST)}$ in *Table 61: NRST pin characteristics*. Updated *Table 62: ADC characteristics* and *Table 64: ADC accuracy*.

Table 86. Document revision history (continued)

Date	Revision	Changes
08-Sep-2015	5	Updated all pinout/ballout schematics to highlight pin/ball supplied through VDD_USB. Updated current consumption in Run mode in *Section : Features*. Renamed BOOT1 into nBOOT1. Changed USARTx_RTS into USARTx_RTS_DE and LPUARTx_RTS into LPUARTx_RTS_DE. Updated VLCD in *Section 3.12: Analog-to-digital converter (ADC)* ADC no more available in Low-power run and Low-power Sleep modes in *Table 4: Functionalities depending on the working mode (from Run/active down to standby)*. Updated *Figure 3: STM32L053x6/8 LQFP64 pinout*, *Figure 4: STM32L053x6/8 TFBGA64 ballout* and *Figure 5: STM32L053x6/8 LQFP48 pinout*. Changed I/O structure for PC5 and modified E5 and E6 signals for TFBGA64 in *Table 15: STM32L053x6/8 pin definitions*. Added ΣI_{VDD_USB} and updated $\Sigma I_{IO(PIN)}$ in *Table 22: Current characteristics* Updated V_{DD_USB} in *Table 22: Current characteristics*. Changed temperature condition in *Table 7: Internal voltage reference measured values* and *Table 26: Embedded internal reference voltage calibration values*. Updated T_{Coeff} in *Table 27: Embedded internal reference voltage*. Added note related to Standby mode in *Table 39: Peripheral current consumption in Stop and Standby mode*. Updated *Figure 14: IDD vs VDD, at TA= 25/55/ 85/105/125 °C, Low-power run mode, code running from RAM, Range 3, MSI (Range 0) at 64 KHz, 0 WS*, *Figure 15: IDD vs VDD, at TA= 25/55/ 85/105/125 °C, Stop mode with RTC enabled and running on LSE Low drive* and *Figure 16: IDD vs VDD, at TA= 25/55/85/105/125 °C, Stop mode with RTC disabled, all clocks OFF*. Updated *Table 40: Low-power mode wake-up timings*. Updated MSI oscillator temperature frequency drift in *Table 48: MSI oscillator characteristics*. Updated *Table 62: ADC characteristics*, *Table 54: EMI characteristics* and *Table 55: ESD absolute maximum ratings*. Added t_{UP_LDO} in *Table 62: ADC characteristics*. Updated *Table 57: I/O current injection susceptibility*, *Table 58: I/O static characteristics* (I_{lkg}) and *Table 60: I/O AC characteristics*. *Section : I2C interface characteristics*: updated introduction and *Table 71: I2C analog filter characteristics*. Updated *Figure 31: SPI timing diagram - slave mode and CPHA = 0*. Added *Section : Device marking for LQFP64*, updated *Figure 42: TFBGA64 marking example (package top view)* and *Figure 48: UFQFPN48 marking example (package top view)* as well as notes below schematics.

Table 86. Document revision history (continued)

Date	Revision	Changes
11-Mar-2016	6	Updated number of SPIs on cover page and in *Table 1: Ultra-low-power STM32L053x6/x8 device features and peripheral counts*. Changed minimum comparator supply voltage to 1.65 V on cover page. Added number of fast and standard channels in *Section 3.12: Analog-to-digital converter (ADC)*. Changed LCD_VLCD1 into LCD_VLCD2 in *Section 3.13.2: V_{LCD} voltage monitoring*. Updated *Section 3.19.2: Universal synchronous/asynchronous receiver transmitter (USART)* and *Section 3.19.4: Serial peripheral interface (SPI)/Inter-integrated sound (I2S)* to mention the fact that USARTs with synchronous mode feature can be used as SPI master interfaces. Added baudrate allowing to wake up the MCU from Stop mode in *Section 3.19.2: Universal synchronous/asynchronous receiver transmitter (USART)* and *Section 3.19.3: Low-power universal asynchronous receiver transmitter (LPUART)*. In *Section 6: Electrical characteristics*, updated notes related to values guaranteed by characterization. *Section 6.3.15: 12-bit ADC characteristics*: – *Table 62: ADC characteristics*: Distinction made between V_{DDA} for fast and standard channels; added note 1 Added note 4 related to R_{ADC}. Updated f_{TRIG}. and V_{AIN} maximum value; added V_{REF+}. Updated t_S and t_{CONV}. – Updated equation 1 description. – Updated *Table 63: R_{AIN} max for f_{ADC} = 16 MHz* for f_{ADC} = 16 MHz and distinction made between fast and standard channels. Updated R_O and added Note 2 in *Table 65: DAC characteristics*. Added *Table 72: USART/LPUART characteristics*. Updated *Figure 48: UFQFPN48 marking example (package top view)*.
11-Oct-2016	7	Updated note related to PA4 in *Table 15: STM32L053x6/8 pin definitions*; added same note to PA4 in *Table 8: Capacitive sensing GPIOs available on STM32L053x6/8 devices* and *Table 16: Alternate function port A*. Updated VDD_USB and VDD in *Table 15: STM32L053x6/8 pin definitions*. Renamed USB_OE into USB_NOE. Added mission profile compliance with JEDEC JESD47 in *Section 6.2: Absolute maximum ratings*. Added note 2. related to the position of the external capacitor below *Figure 25: Recommended NRST pin protection*. Updated R_L in *Table 62: ADC characteristics*. Updated t_{AF} maximum value for range 1 in *Table 71: I2C analog filter characteristics*. Updated $t_{WUUSART}$ description in *Table 72: USART/LPUART characteristics*. Updated *Figure 31: SPI timing diagram - slave mode and CPHA = 0* and *Figure 32: SPI timing diagram - slave mode and CPHA = 1*. Added reference to optional marking or inset/upset marks in all package device marking sections.

Table 86. Document revision history (continued)

Date	Revision	Changes
11-Sep-2017	8	Memories and I/Os moved after Core in *Features*. Removed column "I/O operation" from *Table 2: Functionalities depending on the operating power supply range* and added note related to GPIO speed. Updated V_{DD_USB} in *Section 3.4.1: Power supply schemes*. Updated *Figure 30: 12-bit buffered/non-buffered DAC* and added note below figure. In *Section 5: Memory mapping*, replaced memory mapping schematic by reference to the reference manual. Updated minimum and maximum values of I/O weak pull-up equivalent resistor (R_{PU}) and weak pull-down equivalent resistor (R_{PD}) in *Table 58: I/O static characteristics*. Updated minimum and maximum values of NRST weak pull-up equivalent resistor (R_{PU}) in *Table 61: NRST pin characteristics*. Removed *Table 90: USART/LPUART characteristics*. Updated *Figure 40: TFBGA64 – 64-ball, 5 x 5 mm, 0.5 mm pitch thin profile fine pitch ball grid array package outline*. Updated note below marking schematics.

Table 86. Document revision history (continued)

Date	Revision	Changes
27-Jun-2019	9	Added UFQFPN48 package. Updated Arm logo and added Arm word mark notice in *Section 1: Introduction*. Removed Cortex and USB logos. Updated *Table 4: Functionalities depending on the working mode (from Run/active down to standby)* to change I2C functionality to disabled in Low-power Run and Low-power Sleep modes. Updated V_{DD_USB} description in *Section 3.4.1: Power supply schemes*. Replaced LCD_VLCD2 by LCD_VLCD1 in *Section 3.13.2: V_{LCD} voltage monitoring*. Changed USARTx_RTS, USARTx_RTS_DE into USARTx_RTS/USARTx_DE, and LPUART1_RTS, LPUART1_RTS_DE into LPUART1_RTS/LPUART1_DE in *Section 4: Pin descriptions*. In *Table 15: STM32L053x6/8 pin definitions* changed PB2 and PB12 additional functions to LCD_VLCD2 and LCD_VLCD1, respectively. Updated V_{DD_USB} and note *2.* in *Table 24: General operating conditions*. Updated t_{AF} maximum value for range 1 in *Table 71: I2C analog filter characteristics*. Updated *Figure 40: TFBGA64 – 64-ball, 5 x 5 mm, 0.5 mm pitch thin profile fine pitch ball grid array package outline*, *Figure 41: TFBGA64 – 64-ball, 5 x 5 mm, 0.5 mm pitch, thin profile fine pitch ball ,grid array recommended footprint* and *Figure 82: TFBGA64 recommended PCB design rules (0.5 mm pitch BGA)*. Updated paragraph introducing all package marking schematics to add the new sentence “The printed markings may differ depending on the supply chain”. Added UFQFPN48 package marking example.
31-Jul-2025	10	Added indication that patents apply in *Section : Features*. Added sustainability logo. Added SPI mode to USART feature on cover page and *Section 3.19.2: Universal synchronous/asynchronous receiver transmitter (USART)*. Added reference to the device errata sheet in *Section 1: Introduction*. Updated *Figure 2: Clock tree*. Updated pin numbers for UFQFPN48 in *Table 15: STM32L053x6/8 pin definitions*. Added note on reduced touch sensing sensitivity to PA5 in *Table 15: STM32L053x6/8 pin definitions* and *Table 16: Alternate function port A*. Updated V_{IN} maximum value on FT and FTf pins in *Table 21: Voltage characteristics*. Added reference to AN4899 and recommendation of GPIO low- and high-level voltages in *Section 6.3.13: I/O port characteristics*. Added $t_{WUUSART}$ and $t_{WULPUART\ in}$ *Table 40: Low-power mode wake-up timings*. Updated V_{HSEH} and V_{HSEL} characteristics in *Table 41: High-speed external user clock characteristics*, as well as V_{LSEH} and V_{LSEL} characteristics in *Table 42: Low-speed external user clock characteristics*. Updated *Figure 24: I/O AC characteristics definition*. Updated *Table 54: EMI characteristics*. Updated *Figure 26: ADC accuracy characteristics* and *Figure 27: Typical connection diagram using the ADC*. Removed R_{10K} and R_{400K} from *Table 68: Comparator 1 characteristics*. Updated *Figure 31: SPI timing diagram - slave mode and CPHA = 0*, *Figure 32: SPI timing diagram - slave mode and CPHA = 1*, and *Figure 33: SPI timing diagram - master mode*, and removed notes on measurement at $0.3V_{DD}$ and $0.7V_{DD}$. Added *Section 7.1: Device marking*. Updated *Section 7.2: LQFP64 package information (5W)*, *Section 7.4: LQFP48 package information (5B)*, and *Section 7.5: UFQFPN48 package information (A0B9)*. Added *Section 9: Important security notice*.

IMPORTANT NOTICE – PLEASE READ CAREFULLY

STMicroelectronics NV and its subsidiaries (“ST”) reserve the right to make changes, corrections, enhancements, modifications, and improvements to ST products and/or to this document at any time without notice. Purchasers should obtain the latest relevant information on ST products before placing orders. ST products are sold pursuant to ST’s terms and conditions of sale in place at the time of order acknowledgement.

Purchasers are solely responsible for the choice, selection, and use of ST products and ST assumes no liability for application assistance or the design of Purchasers’ products.

No license, express or implied, to any intellectual property right is granted by ST herein.

Resale of ST products with provisions different from the information set forth herein shall void any warranty granted by ST for such product.

ST and the ST logo are trademarks of ST. For additional information about ST trademarks, please refer to *www.st.com/trademarks*. All other product or service names are the property of their respective owners.

Information in this document supersedes and replaces information previously supplied in any prior versions of this document.

© 2025 STMicroelectronics – All rights reserved