STM32WB5MMG

Datasheet

Bluetooth® LE and 802.15.4 module



These pictures are not contractual

Product status link
STM32WB5MMG

Product summary	
Order code	STM32WB5MMG
Temperature range	-40 °C to 85 °C
Package	LGA86L 7.3 × 11
Package dimensions (mm)	7.3 x 11 x 1.382 x 0.450 pitch
Packaging	Tape and reel

Features

- Includes STMicroelectronics state-of-the-art patented technology
- Integrated chip antenna
- Bluetooth® LE, Zigbee® 3.0, OpenThread certified
- Dynamic and static concurrent modes
- IEEE 802.15.4-2011 MAC PHY
- Supports 2 Mbits/s
- Frequency band 2402-2480 MHz
- Advertising extension
- Tx output power up to +6 dBm
- Rx sensitivity: -96 dBm (Bluetooth® LE at 1 Mbps), -100 dBm (802.15.4)
- Range: up to 75 meters
- Dedicated Arm® Cortex®-M0+ CPU for radio and security tasks
- Dedicated Arm® Cortex®-M4 CPU with FPU and ART (adaptive real-time accelerator) up to 64 MHz speed
- 1-Mbyte flash memory, 256-Kbyte SRAM
- Fully integrated BOM, including 32 MHz radio and 32 kHz RTC crystals
- Integrated SMPS
- Ultra-low-power modes for battery longevity
- 68 GPIOs
- SWD, JTAG
- Integrated IPD for best-in-class and reliable antenna matching
- 1.71 V to 3.6 V V_{DD} range
- -40°C to 85°C temperature range
- Built-in security features, such as: secure firmware installation (SFI) for radio stack, customer key storage/key management services, PKA, AES 256-bit, TRNG, PCROP, CRC, 96-bit UID, possibility to derive 802.15.4 and Bluetooth® LE 48-bit UEI
- Certifications: CE, FCC, IC, JRF, SRRC, RoHS, REACH, KC, NCC
- Two-layer PCB compatibility (using external raw pins only)

Application

- Lighting and home automation
- Wireless audio devices
- Wellness, healthcare, personal trackers
- Gaming and toys
- Smart locks
- Beacons and accessories
- Industrial

1 Introduction

This datasheet provides the ordering information and mechanical device characteristics of the STM32WB5MMG module.

This document must be read in conjunction with *Multiprotocol wireless 32-bit MCU Arm®-based Cortex®-M4 with FPU, Bluetooth® 5.4 and 802.15.4 radio solution* (DS11929) and *Multiprotocol wireless 32-bit MCU Arm®-based Cortex®-M4 with FPU, Bluetooth® LE and 802.15.4 radio solution* (RM0434). Both documents are available from the STMicroelectronics website at *www.st.com*.

For information on the device errata with respect to the datasheet and reference manual, refer to the *STM32WB5MMG errata sheet* (ES0525), available on the STMicroelectronics website www.st.com.

For information on the Arm® Cortex® cores, refer to the Cortex® Technical Reference Manual, available from the www.arm.com website.

Note: Arm is a registered trademark of Arm Limited (or its subsidiaries) in the US and/or elsewhere.

2 Description

STM32WB5MMG is an ultra-low-power and small form factor certified 2.4 GHz wireless module. It supports Bluetooth® LE, Zigbee® 3.0, OpenThread, dynamic, and static concurrent modes, and 802.15.4 proprietary protocols. Based on the STMicroelectronics STM32WB55VGY wireless microcontroller, STM32WB5MMG provides best-in-class RF performance thanks to its high receiver sensitivity and output power signal. Its low-power features enable extended battery life, small coin-cell batteries, and energy harvesting.

STM32WB5MMG revision Y is based on cut 2.1 of the STM32WB55VGY microcontroller. Revision X is based on cut 2.2.

STM32WB5MMG requires no RF expertise and is the best way to speed up any development and reduce associated costs. The module is completely protocol stack royalty-free.

3 Module overview

The module is an SiP-LGA86 package (system in package land grid array) that integrates the proven STM32WB55VGY MCU with several external components. The package includes:

- LSE crystal
- HSE crystal
- Passive components for SMPS
- Antenna matching and antenna
- IPD for RF matching and harmonics rejection

Figure 1. STM32WB5MMG module block diagram

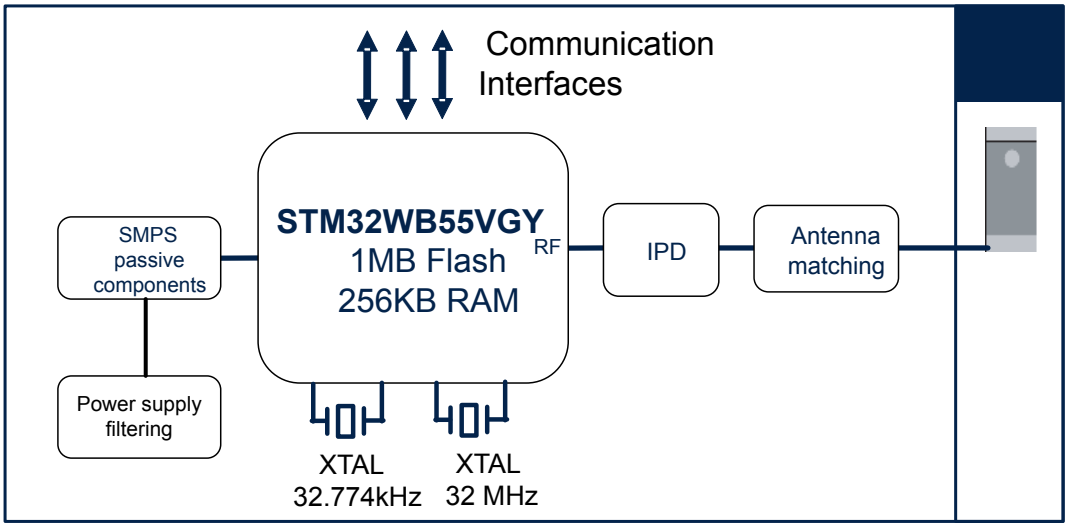

3.1 Versions

The STM32WB5MMG is shipped in two finished goods versions. In this datasheet they are referred to as versions X and Y. X is the more recent version. The product version is identified by the package marking with X or Y as shown in Section 9.3: Device marking for SiP-LGA86.

3.2 Power supply

The power supply requirements are identical to regular STM32WB55xx and described in the datasheet. Filtering capacitors on power supply pins and components for the SMPS are already integrated into the module.

Note: An additional capacitor of 4.7 uF may be needed to eliminate ripple from the power supply. Refer to the application note Development of RF hardware using STM32WB microcontrollers (AN5165).

3.2.1 SMPS

SMPS can be set to either ON or in BYPASS mode. The integrated passive components are for SMPS operation running at 4MHz. For additional information on the SMPS, check the reference manual or the application note *Usage of SMPS on STM32WB Series microcontroller* (AN5246).

3.3 Clocks

As the crystals are already integrated into the package, it is not possible to use any clock in bypass mode. The module integrates 32.774 kHz crystal for LSE and 32 MHz crystal for the HSE clock.

- LSE must be used in medium high driving capability. (RCC_BDCR_LSEDRV[1:0] = 10, refer to *Multiprotocol wireless 32-bit MCU Arm®-based Cortex®-M4 with FPU, Bluetooth® LE and 802.15.4 radio solution* (RM0434) for more details).
- HSE is already tuned.
  RCC_HSECR_HSETUNE[5:0] value is loaded automatically by HW. The RCC_HSECR register configuration must not be changed by the user to keep the default parameters.
- LSCO and MCO outputs are available.
- HSEGMC[2:0] must be set to 0b011.

3.4 Antenna

The rectangular module has one shorter side clearly different from the remaining finish surface. This side is unshielded and the mold cover contains the integrated antenna.

There is no option to use an external antenna.

3.5 One time programming (OTP)

The STM32WB5MMG features 1 Kbyte one time programmable (OTP) memory for use by the end product. This is described in *Multiprotocol wireless 32-bit MCU Arm®-based Cortex®-M4 with FPU, Bluetooth® 5.4 and 802.15.4 radio solution* (DS11929) and *Multiprotocol wireless 32-bit MCU Arm®-based Cortex®-M4 with FPU, Bluetooth® LE and 802.15.4 radio solution* (RM0434).

Note: STM32WB5MMG uses the first and last words of this area for trimming and identification purposes.
As a consequence addresses 0x1FFF7000 - 0x1FFF7007 and 0x1FFF73F8 - 0x1FFF73FF cannot be changed.

4 Available peripherals

All peripherals available in STM32WB Series microcontrollers based on the WLCSP100 package are available and accessible on this module.

The pins on the module offer access to the following system peripherals:

- 2× DMA controllers (seven channels each) supporting ADC, SPI, I^{2}C, USART, QSPI, SAI, AES, timers
- 1× USART (ISO 7816, IrDA, SPI master, Modbus and Smartcard mode)
- 1× LPUART (low power) – Two SPI running at 32 Mbit/s
- 2× I^{2}C (SMBus/PMBus)
- 1× SAI (dual channel high quality audio)
- 1× USB 2.0 FS device, crystal-less, BCD and LPM
- 1× Touch sensing controller, up to 18 sensors
- 1× LCD 8x40 with step-up converter
- 1× 16-bit, four channels advanced timer
- 2× 16-bit, two channels timers
- 1× 32-bit, four channels timer
- 2× 16-bit ultra-low-power timers
- 1× independent Systick
- 1× independent watchdog
- 1× window watchdog.

The full pin description is available in *Multiprotocol wireless 32-bit MCU Arm®-based Cortex®-M4 with FPU, Bluetooth® 5.4 and 802.15.4 radio solution* (DS11929).

5 Pin description

The following figure shows the module pinout package bottom view.

Figure 2. STM32WB5MMG module pinout: bottom view

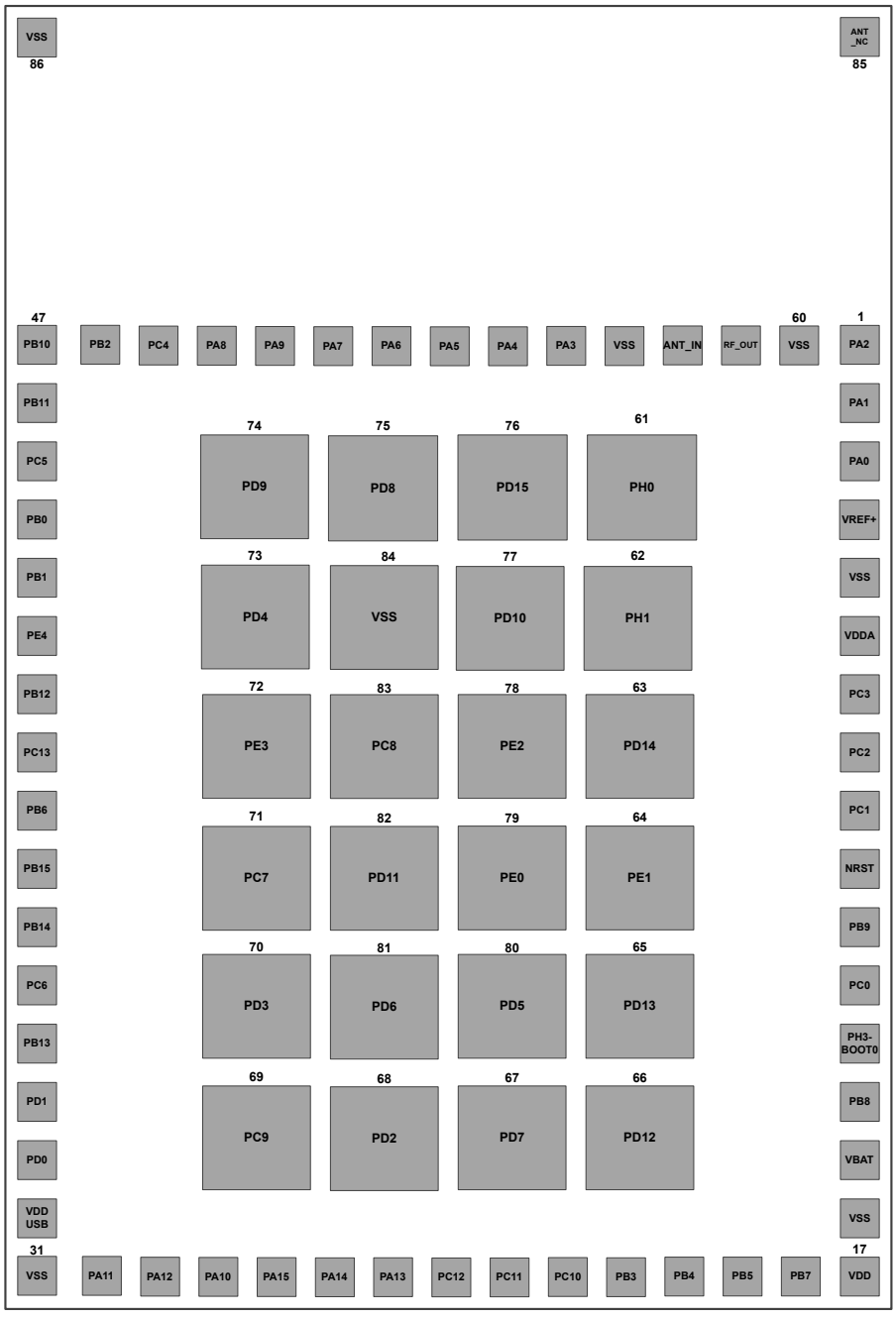

DT63749V2

Note: PB0 and PB1 are only available for revision X parts.

Table 1. **STM32WB5MMG pin/ball definition**

Pin name		Pin name (function after reset)	Pin type
STM32WB5MMG	STM32WB55VGY		
1	F6	PA2	I/O
2	G6	PA1	I/O
3	G7	PA0	I/O
4	H8	VREF+	S
5	J9	VSS	S
6	H9	VDDA	S
7	G10	PC3	I/O
8	G9	PC2	I/O
9	G8	PC1	I/O
10	F9	NRST	RST
11	F10	PB9	I/O
12	F8	PC0	I/O
13	E8	PH3-BOOT0	I/O
14	F7	PB8	I/O
15	C10	VBAT	S
16	F1	VSS	S
17	D1	VDD	S
18	D7	PB7	I/O
19	D6	PB5	I/O
20	C7	PB4	I/O
21	A9	PB3	I/O
22	A6	PC10	I/O
23	B6	PC11	I/O
24	C5	PC12	I/O
25	A5	PA13	I/O
26	A3	PA14	I/O
27	A4	PA15	I/O
28	B5	PA10	I/O
29	A2	PA12	I/O
30	A1	PA11	I/O
31	-	VSS	S
32	B3	VDDUSB	S
33	C4	PD0	I/O
34	C3	PD1	I/O
35	C1	PB13	I/O
36	D2	PC6	I/O
37	E2	PB14	I/O
38	F3	PB15	I/O
39	F5	PB6	I/O
40	G5	PC13	I/O
41	G3	PB12	I/O
42	G1	PE4	I/O
43	H1[1]/NC[2]	PB1	I/O
44	H2[1]/NC[2]	PB0	I/O
45	H5	PC5	I/O

Pin name		Pin name (function after reset)	Pin type
STM32WB5MMG	STM32WB55VGY		
46	J6	PB11	I/O
47	K6	PB10	I/O
48	K7	PB2	I/O
49	G4	PC4	I/O
50	J7	PA8	I/O
51	K8	PA9	I/O
52	H6	PA7	I/O
53	H7	PA6	I/O
54	K9	PA5	I/O
55	K10	PA4	I/O
56	J8	PA3	I/O
57	-	VSS	S
58	-	ANT_IN	I/O
59	-	RF_OUT	I/O
60	-	VSS	S
61	E10	PH0	I/O
62	E9	PH1	I/O
63	D8	PD14	I/O
64	B10	PE1	I/O
65	C9	PD13	I/O
66	B8	PD12	I/O
67	A8	PD7	I/O
68	A7	PD2	I/O
69	B4	PC9	I/O
70	C2	PD3	I/O
71	E3	PC7	I/O
72	G2	PE3	I/O
73	D3	PD4	I/O
74	D5	PD9	I/O
75	D4	PD8	I/O
76	E7	PD15	I/O
77	E4	PD10	I/O
78	E6	PE2	I/O
79	C8	PE0	I/O
80	B7	PD5	I/O
81	C6	PD6	I/O
82	E5	PD11	I/O
83	F4	PC8	I/O
84	-	VSS	S
85	-	ANT_NC	I/O
86	-	VSS	S

1. *Version X*
2. *Version Y*

6 Recommendations

6.1 Pin recommendations

- ANT_IN and RF_OUT pins must be connected to GND. This module already integrates an antenna, so no external antenna required.
- The ANT_NC is only used for soldering planarity purposes. So this pin must be soldered to an unconnected pin on the customer board.
- PH3_BOOT0 is tied low through an internal pull-down to enable start from flash memory. However, it can be tied high with a low resistive pull-up if required.
- A reset pull-up is already implemented in the STM32WB Series microcontrollers. The reset circuitry only requires an external capacitor for filtering purpose (see Figure 3).

Figure 3. Reset circuit

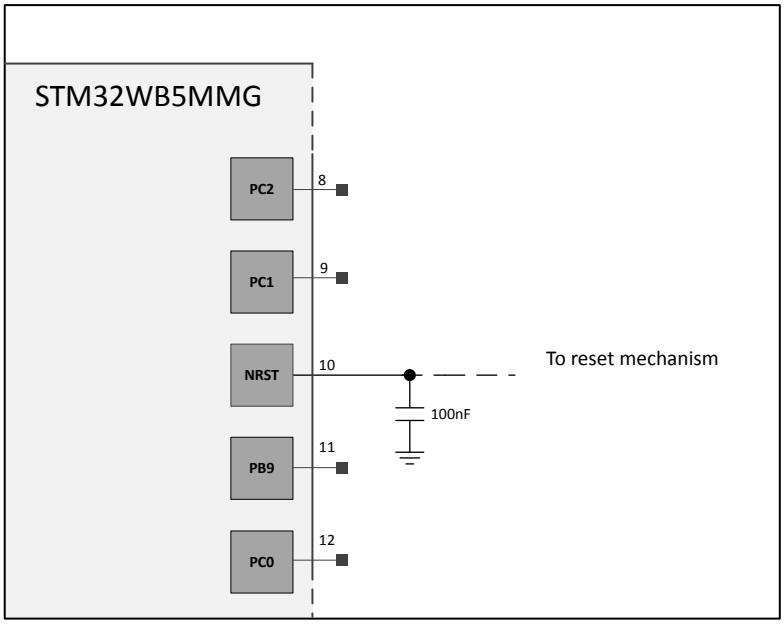

6.2 Layout recommendations

6.2.1 STM32WB5MMG placement

The embedded antenna manufacturer of the STM32WB5MMG recommends to place the module on the application board as shown below.

Figure 4. STM32WB5MMG board placement

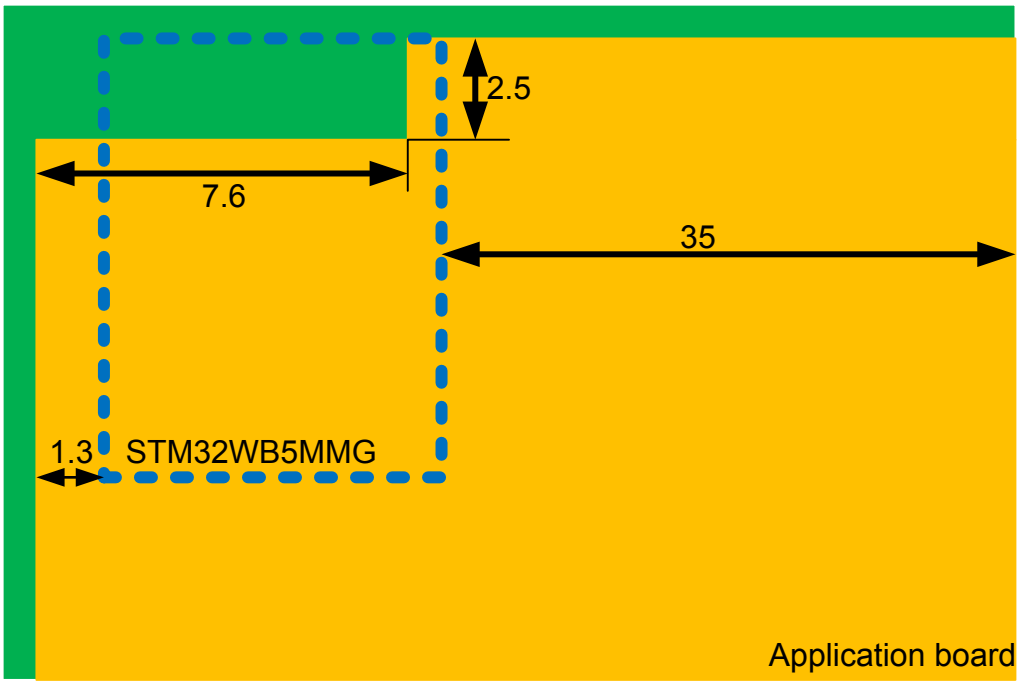

Distances in mm

This position allows the antenna to work to its maximum performance. If it cannot be placed as recommended above, the application board performance could be reduced. This does not, however, prevent correct operation.

6.2.2 Enclosure effects

Product casing properties must be also considered when designing an RF-enabled product as the following generic best practices list illustrated:

- Conductive enclosure in the near field affects the impedance of the antenna, also the resonant frequency. A metal case must not be in the near field. The threshold between near and far-field is provided in Figure 5.
- Plastic enclosures can be close to the antenna, but must not touch it. Contact between the casing and the antenna may influence the tuning of the resonant frequency and impedance matching.
- The proximity of the human body attenuates the TX and RX signals due to a certain amount of water content. Any contact may untune frequency and impedance matching.

Figure 5. Conductive enclosure around the antenna

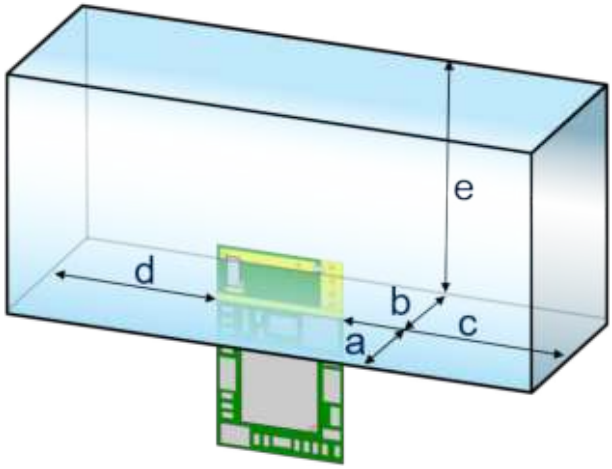

Table 2. Minimum enclosure dimensions (mm)

Impact level	a	b	c	d	e
Impact threshold	46	60	27	23	17
High impact	13	24	3	8	5

Note: Impact is determined by measuring the reflection losses in the appropriate direction. In case conductive material is present from other directions, the distances mentioned in Table 2 become larger. It means the same impact is observed further from module.

6.2.3 Ground plane

Here are some recommendations with respect to the ground plane design:

- Do not route any tracks to the right of the STM32WB5MMG and keep a large ground plane with the associated ground via.
- Route the tracks down directly on the top layer or with via to the other layers.
- The ground plane must include the presence of vias (distance between two vias = 2 mm).

Figure 6. STM32WB5MMG ground plane layout

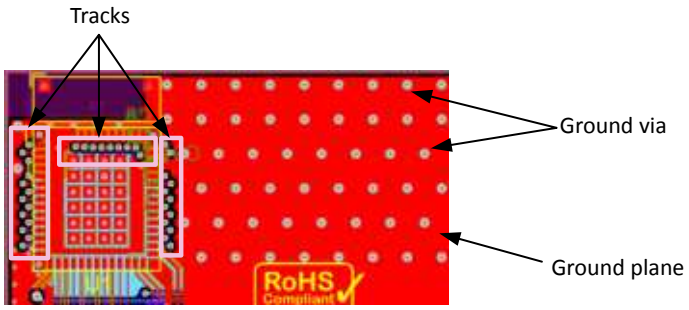

6.2.4 Sensitive GPIOs

This board contains three sensitive GPIOs as defined below:

- PB10
- PB11
- PC5

The GPIO locations are illustrated in Figure 7

When PB10, PB11 and/or PC5 are used, a 3.3 pF capacitor in a small package such as the 0201 or smaller, must be placed as close as possible to the output pin. Also border the GPIO tracks with the ground plane.

Figure 7. Sensitive GPIO location

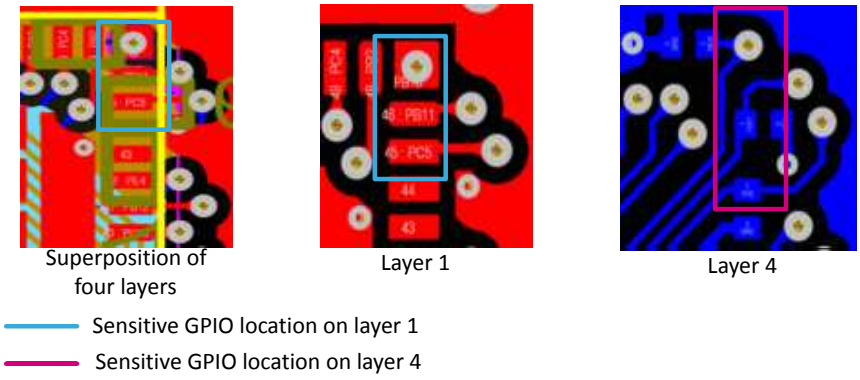

6.2.5 Four layer reference board design

The reference schematics are illustrated in Figure 8 and the associated PCB layout is illustrated in Figure 9

When all the pads on the device need to be used, the mother board must be designed with four layers.

Figure 8. **Four layer reference board schematics for version X**

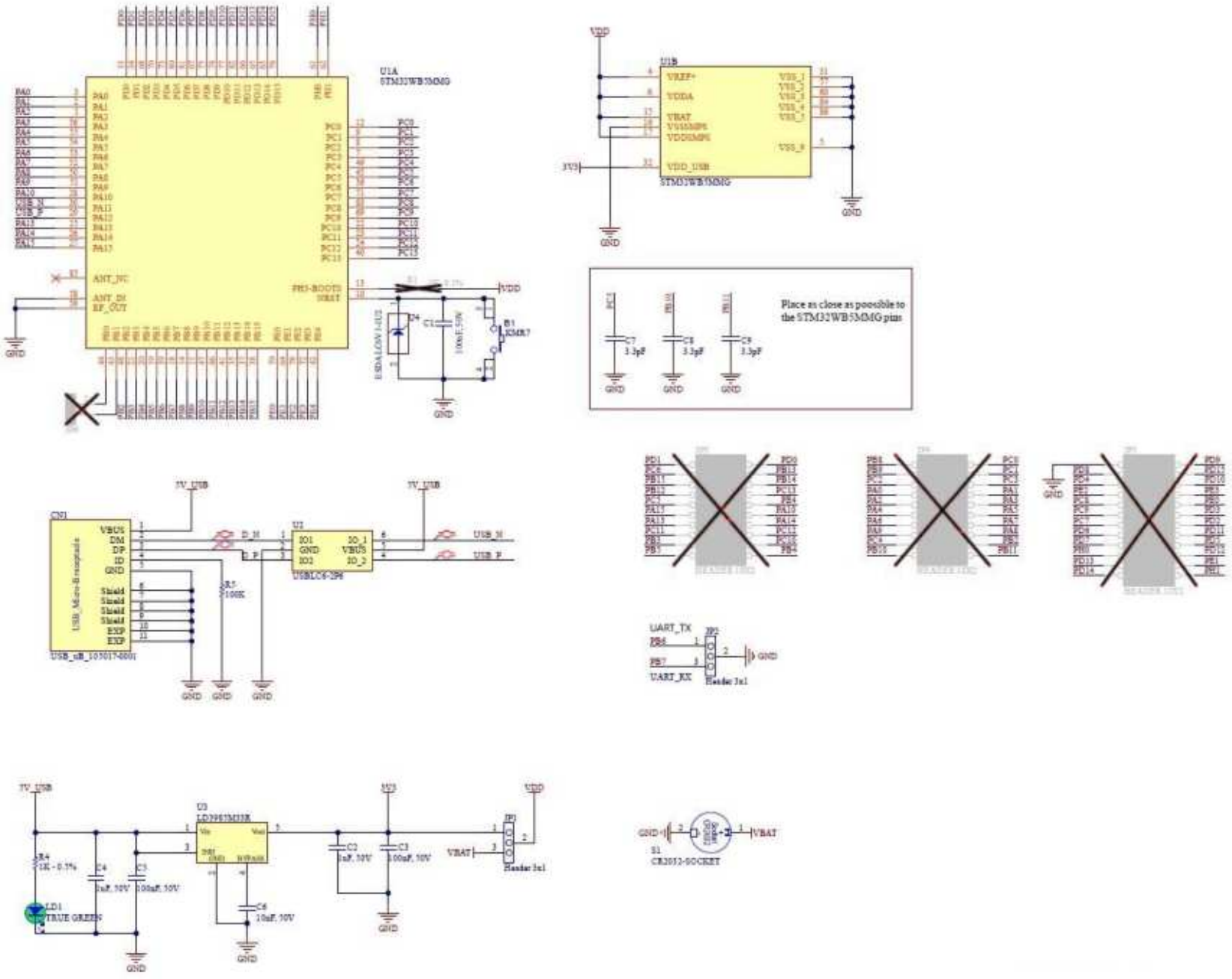

Figure 9. **Four layer PCB layout for version X**

Layer 1

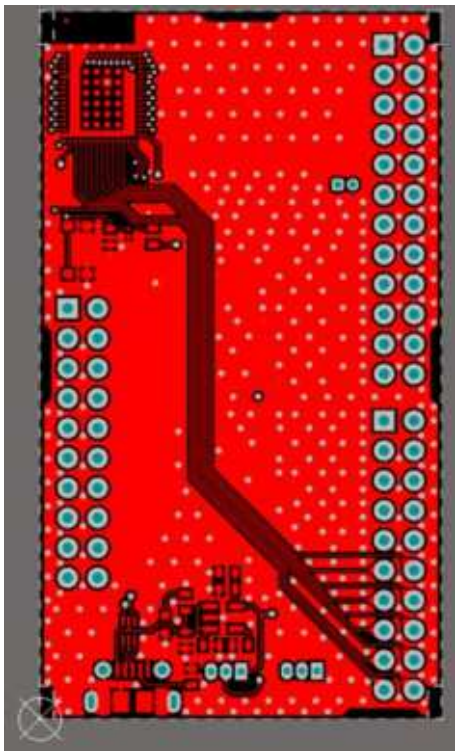

Layer 2

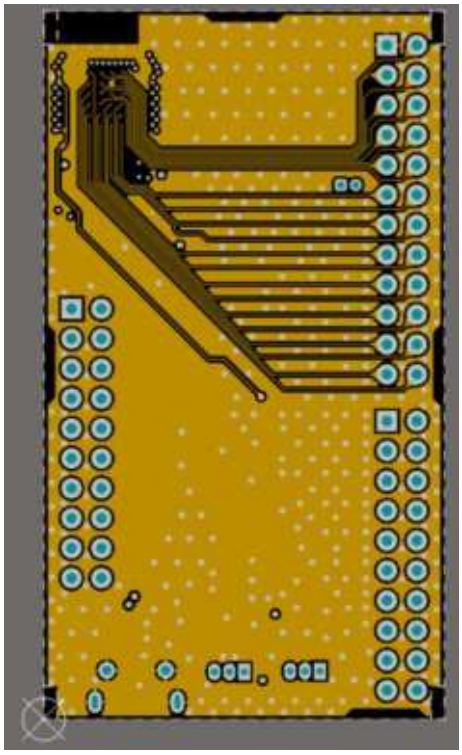

Layer 3

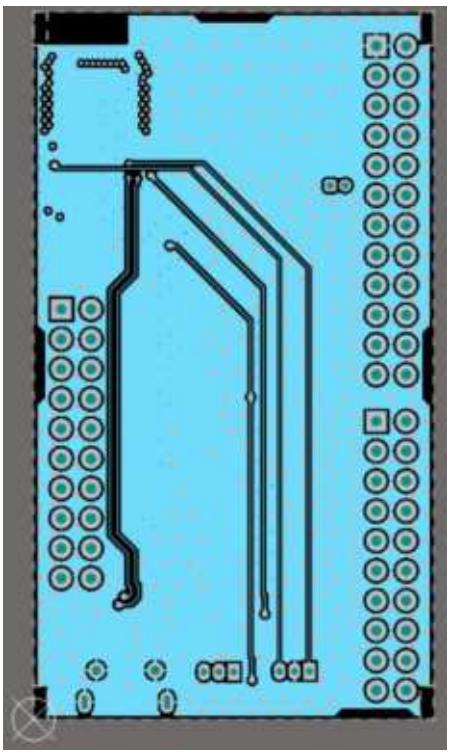

Layer 4

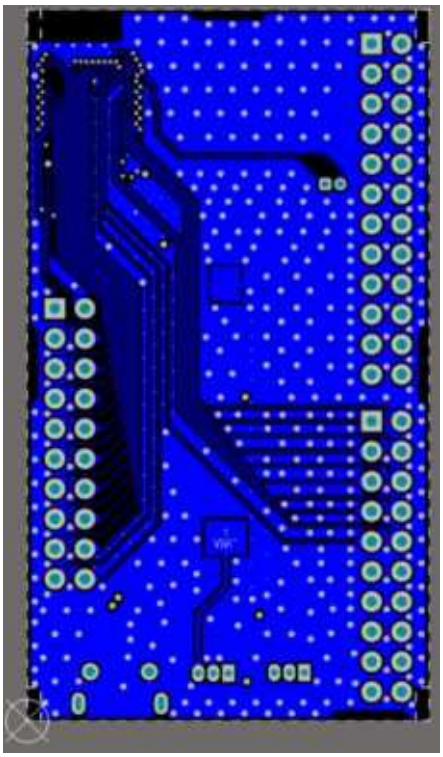

6.2.6 Two layer reference board design

The reference schematics are illustrated in Figure 10. Two layer reference board schematics for version X and the associated PCB layout is illustrated in Figure 11. Two layer PCB layout for version X

By using the first external pad ring, the mother board on which the module is soldered may be designed with only two layers.

Figure 10. **Two layer reference board schematics for version X**

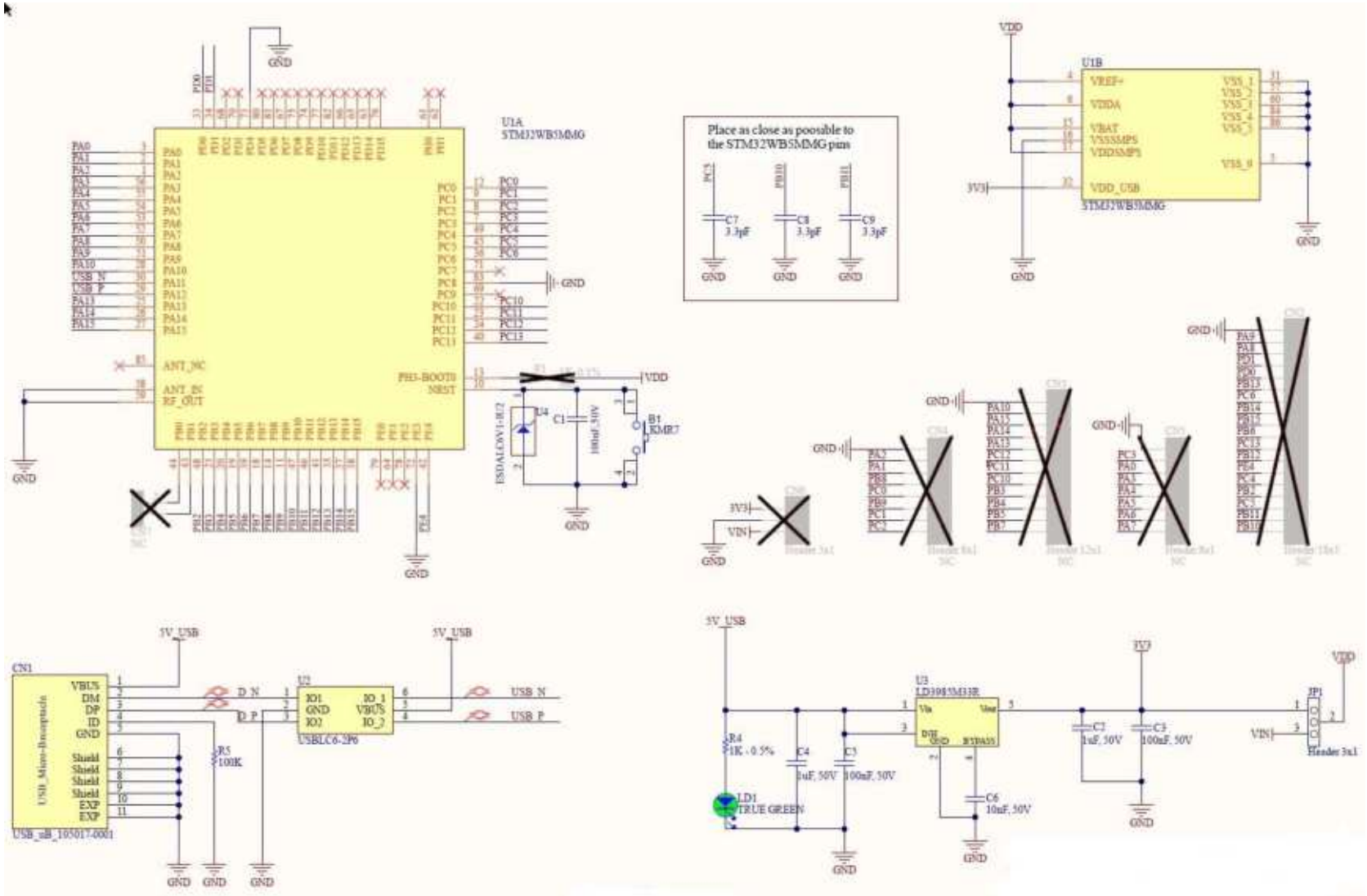

Figure 11. **Two layer PCB layout for version X**

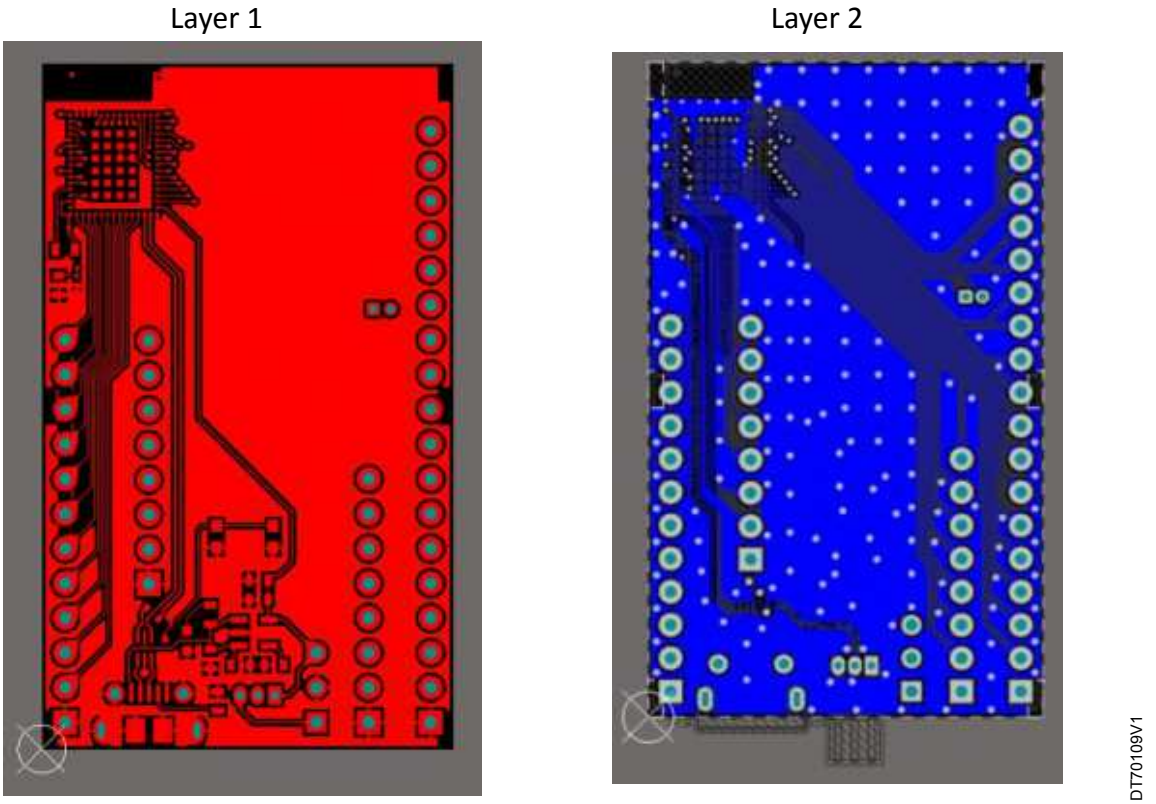

7 Electrical characteristics

7.1 Operating conditions

Table 3. STM32WB55VGY operating conditions

Parameter	Min.	Typ.	Max.	Unit
V_{DD}	1.71	3.3	3.6	V
Operating ambient temperature range	-40	-	85	°C
Storage temperature range	-40	-	125	°C

7.2 Power consumption

The power consumption is identical to the regular STM32WB55. For full details refer to *Multiprotocol wireless 32-bit MCU Arm®-based Cortex®-M4 with FPU, Bluetooth® 5.4 and 802.15.4 radio solution* (DS11929).

7.3 RF characteristics

Refer to *Multiprotocol wireless 32-bit MCU Arm®-based Cortex®-M4 with FPU, Bluetooth® 5.4 and 802.15.4 radio solution* (DS11929) for more details.

7.4 Antenna radiation patterns and efficiency

Refer to TN1526 for antenna radiation patterns of module STM32WB5MMG

8 Thermal characteristics

The thermal characteristics of the STM32WB5MMG are defined below and the constant values are given in Table 4 where:

- $\Theta_{JA,}$ is the junction-to-ambient thermal resistance (EIA/JESD51-2 and EIA/JESD51-6).
  Θ_{JA} represents the resistance to the heat flows from the chip to ambient air. It is an indicator of package heat dissipation capability. Lower $\Theta_{JA,}$ means better overall thermal performance and is calculated as follows:
  $\Theta_{JA,} = (T_J - T_A) / P_{H,}$
  where:
  - T_J = junction temperature
  - T_A = ambient temperature
  - P_H = power dissipation.
- Ψ_{JT} is the junction-to-top-center thermal characterization parameter (EIA/JESD51-2 and EIA/JESD51-6).
  Ψ_{JT} is used for estimating the junction temperature by measuring T_T in an actual environment and is calculated as follows:
  $\Psi_{JT} = (T_J - T_T) / P_H$
  where T_T = temperature at the top-center of the package.
- Θ_{JC} is the junction-to-case thermal resistance.
  Θ_{JC} represents the resistance to the heat flows from the chip to package top case. Θ_{JC} is important when external heat sink is attached on package top and is calculated as follows:
  $\Theta_{JC} = (T_J – T_C) / P_H$
  where T_C = case temperature attached with a cold plate.
- Θ_{JB} is the junction-to-board thermal resistance (EIA/JESD51-8).
  Θ_{JB} represents the resistance to the heat flows from the chip to PCB. Θ_{JB} is used in compact thermal models for system-level thermal simulation and is calculated as follows:
  $\Theta_{JB} = (T_J – T_B) / P_H$
  where T_B = board temperature with ring cold plate fixture applied.

Table 4. STM32WB5MMG thermal characteristics

Symbol	T_J(°C)	T_T(°C)	Ψ_{JT}(°C/W)	Θ_{JA}(°C/W)	Θ_{JB}(°C/W)	Θ_{JC}(°C/W)
Value	97.36	96.98	0.38	37.36	24.58	16.21

9 Package information

In order to meet environmental requirements, ST offers these devices in different grades of ECOPACK packages, depending on their level of environmental compliance. ECOPACK specifications, grade definitions and product status are available at: www.st.com. ECOPACK is an ST trademark.

9.1 SiP-LGA86 package information

This SiP-LGA is a 86 pin, 7.3 x 11mm, system in package land grid array package.

Figure 12. SiP-LGA86 - Outline

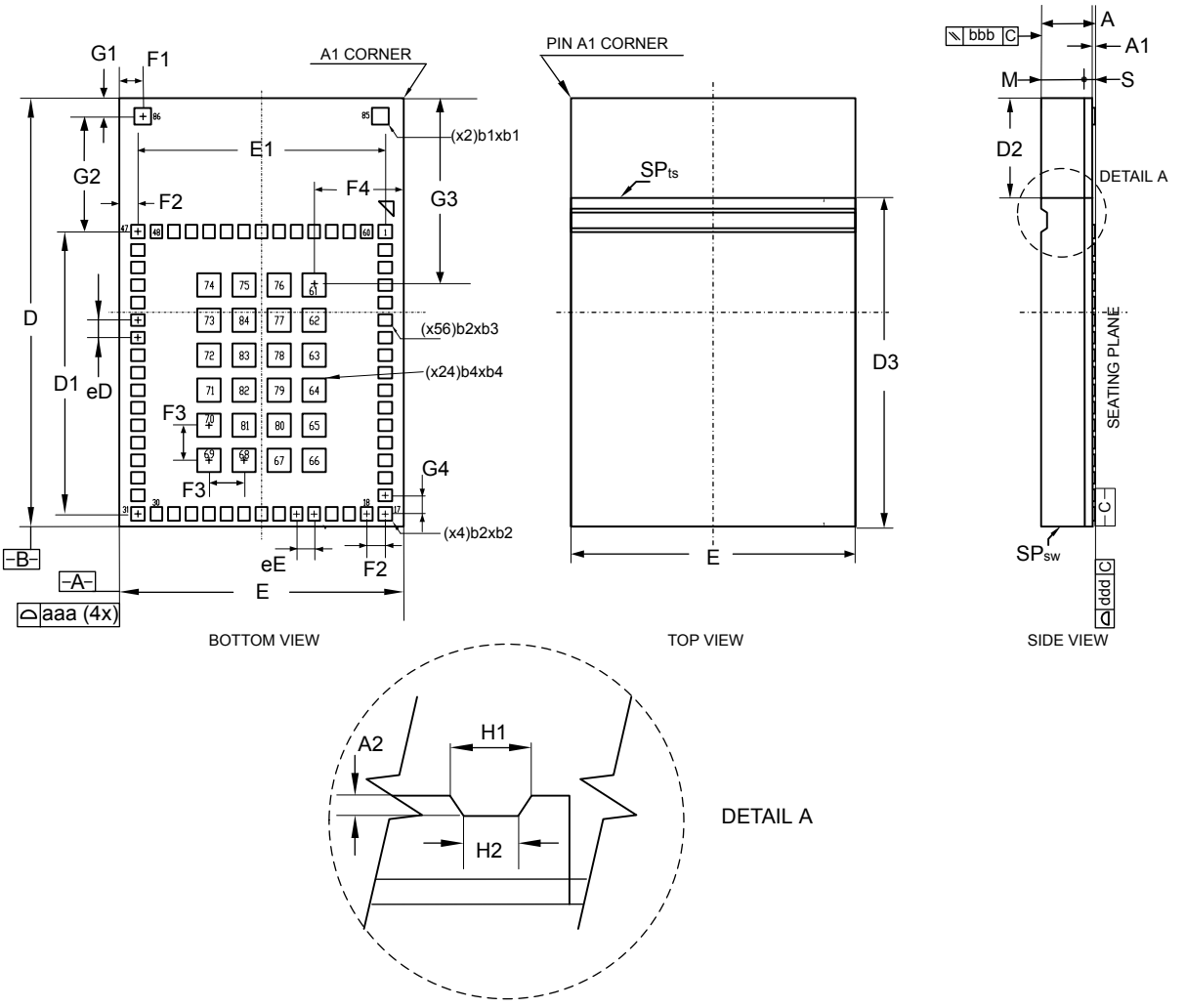

1. *Drawing is not to scale.*

Table 5. SiP-LGA86 - Mechanical data

Symbol	Description	Min	Typ	Max	Unit
A	Total thickness		1.382±0.046		mm
A1	Pre-solder		40±20[1]		µm
			30±20[2]		
A2	-		0.150		mm
M	Mold thickness		1.100		mm
S	Substrate thickness		0.242		
D	Body length	10925	11.000	11.075	
D1	Lead pitch length		7.250		
D2	-		2.563		
D3	-		8.438		
eD	Lead pitch length		0.450		
E	Body width	7.225	7.300	7.375	
eE	Lead pitch width		0.450		
b1	-		0.430		
b2	-		0.350		
b3	-		0.300		
b4	-		0.600		
F1	-		0.600		
F2	-		0.475		
F3	-		0.900		
F4	-		2.300		
G1	-		0.465		
G2	-		2.960		
G3	-		4.800		
G4	-		0.475		
H1	-		0.600		mm
H2	-		0.400		mm
SP_{ts}[3]	Top surface sputter	3	-	6	µm
SP_{sw}[4]	Side wall sputter	1	-	3	µm
aaa	Package edge tolerance		0.075		mm
bbb	Mold flatness		0.100		
ddd	Coplanarity		0.100		

1. *Peripheral pads*
2. *Inner pads*
3. *Top surface sputter*
4. *Side wall sputter*

9.2 Board design

For information and recommendations related to board design, landing pads, stencils and the solder reflow profile for LGA packages, refer to *Guidelines for design and board assembly of land grid array packages* (AN 5886).

9.3 Device marking for SiP-LGA86

The following figure gives an example of topside marking versus pin 1 position identifier location.

The printed markings may differ depending on the supply chain.

Other optional marking or inset/upset marks, which depend on supply chain operations, are not indicated below.

Figure 13. SiP-LGA86 marking example

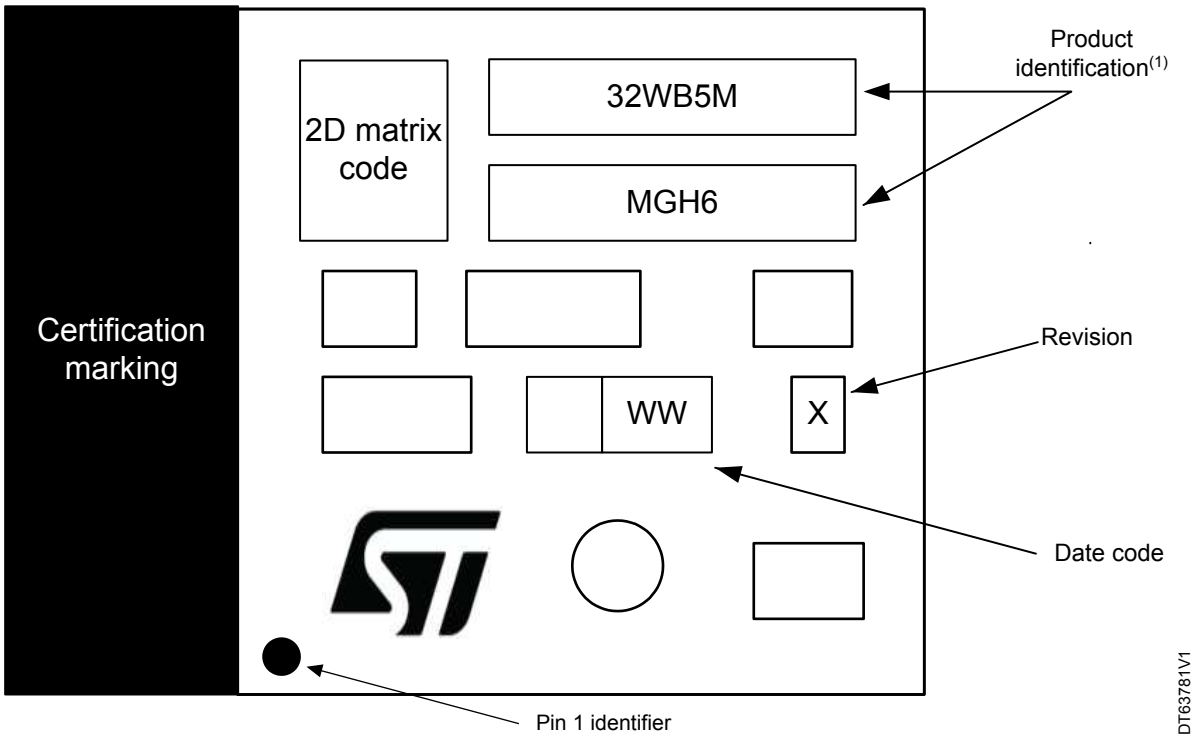

1. Parts marked as “ES”, “E” or accompanied by an Engineering Sample notification letter, are not yet qualified and therefore not approved for use in production. ST is not responsible for any consequences resulting from such use. In no event will ST be liable for the customer using any of these engineering samples in production. ST’s Quality department must be contacted prior to any decision to use these engineering samples to run a qualification activity.

10 Ordering information

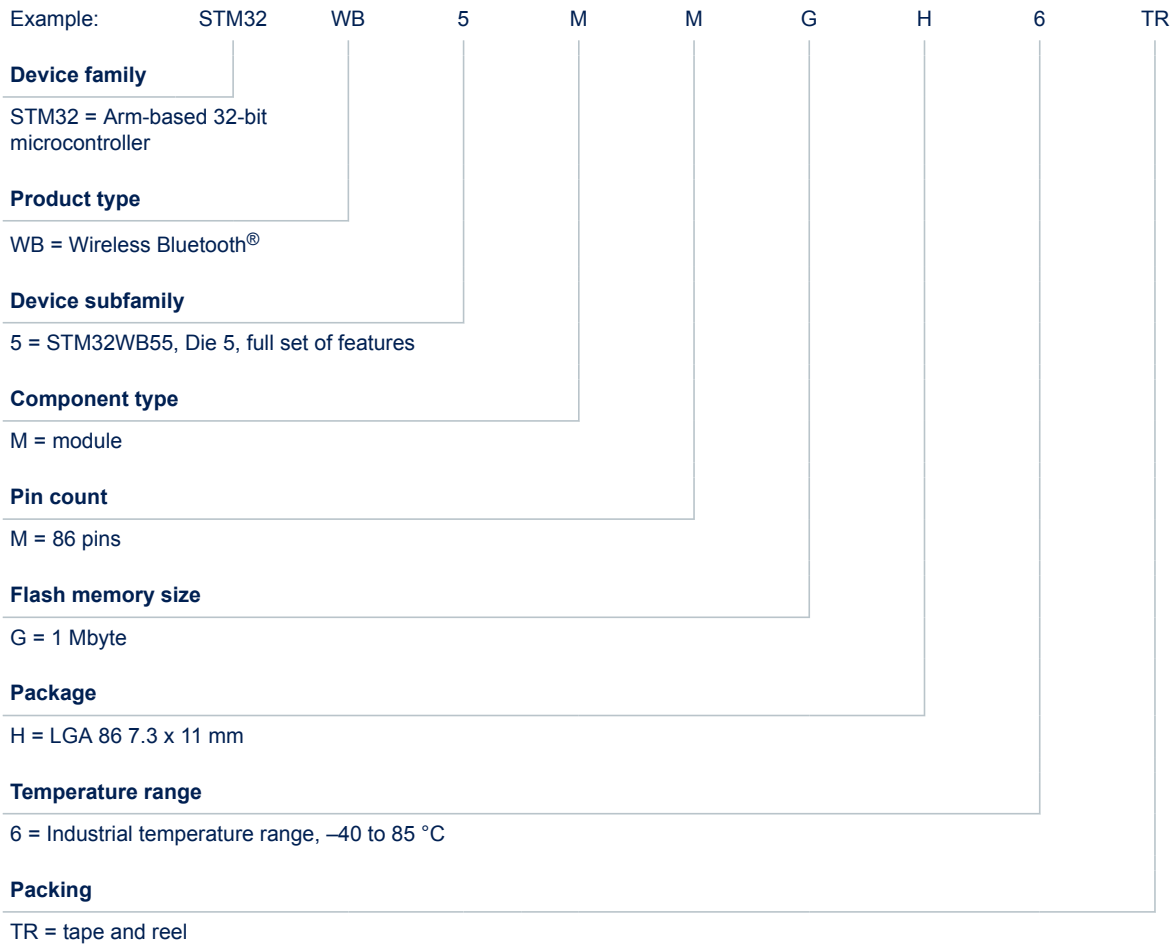

Note: For a list of available options (such as speed and package) or for further information on any aspect of this device, contact your nearest ST sales office.

11 Certification

The STM32WB5MMG module certifications status is detailed in the table below:

Table 6. Certification status

Certification		Revision Y	Revision X
Bluetooth LE	RF-PHY	X	X
802.15.4 (Zigbee)	RF-PHY	X	X
EU	RED	X	X
UK	UKCA	-	X
USA	FCC	X	X
Canada	ISED-PCB	X	X
China	SRRC	-	X
Japan	JRF	X	X
Korea	KC or MSIP	X	X
Taiwan	NCC	X	X
EU	ROHS	X	X
EU	REACH	X	X
India	ETA	-	X
Thailand	NBTC	-	X

Note: The current revision is X.

The following sections detail some of the module certifications from sample regions.
All certifications reports are available on STM32WB5MMG page.

11.1 Bluetooth® LE (RF_PHY) certification

The STM32WB5MMG module has obtained Bluetooth® LE RF_PHY certification.
The module is published under Bluetooth® LE SIG website.

11.2 CE certification

The STM32WB5MMG module has obtained CE certification.
The module is provided with CE marking.

Figure 14. CE certification logo



11.3 UKCA certification

The STM32WB5MMG module has obtained UKCA certification.

The module is provided with UKCA marking.

Figure 15. UKCA certification logo



11.4 FCC certification

The STM32WB5MMG module complies with part 15 of the FCC Rules.

The FCC ID is YCP-STM32WB5M001 for version Y, and YCP-32WB5MMGH02 for version X.

The module label includes the corresponding FCC ID.

The operation is subject to the following two conditions:

- This device may not cause harmful interference
- This device must accept any interference received, including interference that may cause undesired operation.

Note: This equipment has been tested and found to comply with the limits for a Class B digital device, pursuant to part 15 of the FCC Rules. These limits are designed to provide reasonable protection against harmful interference in a residential installation.

Label requirements

If the identification number is not visible when the module is installed inside another device, then the outside of the device into which the module is installed must also display a label referring to the enclosed module. This label must contain the FCC ID that matches the one on the module.

Documentation requirements

The users manual or instruction manual for an intentional or unintentional radiator shall caution the user that changes or modifications not expressly approved by the party responsible for compliance could void the user's authority to operate the equipment.

Integration requirements

Co-location of this module with other transmitters that operate simultaneously are required to be evaluated using the multi-transmitter procedures.

The host integrator must follow the integration instructions provided in this document and ensure that the composite-system end product complies with the requirements by a technical assessment or evaluation to the rules and to KDB Publication 996369.

The host integrator installing this module into their product must ensure that the final composite product complies with the requirements by a technical assessment or evaluation to the rules, including the transmitter operation and should refer to guidance in KDB 996369.

11.5 ISED certification

The STM32WB5MMG module has been tested and found compliant with the ISED RSS-247 and RSS-Gen rules. The IC ID is 8976A-STM32WB5M01 for version Y and 8976A-32WB5MMGH02 for version X .

This module contains license-exempt transmitter(s) that comply with Innovation, Science and Economic Development Canada's license-exempt RSS(s). Operation is subject to the following two conditions:

- This module may not cause interference
- This module must accept any interference, including interference that may cause undesired operation of the module.

L'émetteur exempt de licence contenu dans le présent appareil est conforme aux CNR d'Innovation, Sciences et Développement économique Canada applicables aux appareils radio exempts de licence. L'exploitation est autorisée aux deux conditions suivantes :

- L'appareil ne doit pas produire de brouillage.
- L'appareil doit accepter tout brouillage radioélectrique subi, même si le brouillage est susceptible d'en compromettre le fonctionnement.

11.6 JRF certification

The STM32WB5MMG is certified in Japan with certification number:

- 005-102490 for rev Y
- 217-220682 for rev X.

The JRF logo is the following:

Figure 16. JRF certification logo

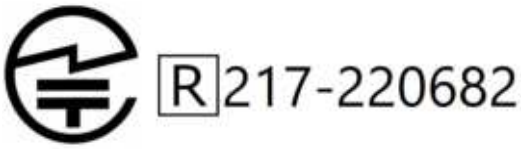

11.7 NCC certification

The STM32WB5MMG rev X is certified in Taiwan with NCC certification number: CCAJ23LP3C40T2.

The STM32WB5MMG rev Y is certified in Taiwan with NCC certification number: CCAN20LP0740T3.

Figure 17. NCC certification logo



取得審驗證明之低功率射頻器材，非經核准，公司、商號或使用者均不得擅自變更頻率、加大功率或變更原設計之特性及功能。

低功率射頻器材之使用不得影響飛航安全及干擾合法通信；經發現有干擾現象時，應立即停用，並改善至無干擾時方得繼續使用。前述合法通信，指依電信管理法規定作業之無線電通信。低功率射頻器材須忍受合法通信或工業、科學及醫療用電波輻射性電機設備之干擾。

系統廠商應於平台上標示「本產品內頻模組：圖片 XXXyyyLPDzzzz-x」字樣

For low-power radio frequency equipment that has obtained certification, companies, firms or users are not allowed to change the frequency, increase the power, or change the characteristics and functions of the original design without approval. The use of low-power radio-frequency equipment must not affect flight safety and interfere with legal communications; if any interference is found, it should be stopped immediately, and it can only be used after improvement to no interference. The aforementioned legal communication refers to radio communication operated in accordance with the provisions of the Telecommunications Management Act. Low-power radio frequency equipment must endure the interference of legal communication or industrial, scientific and medical radio wave radiation electrical equipment. System manufacturers should mark the words "This product contains a radio frequency module: XXXyyyLPDzzzz-x" on the platform.

11.8 SRRC certification

The module STM32WB5MMG has received regulatory approval in China (SRRC) with CMIIT ID 2023DP14302.

11.9 KC certification

Applicant : STMicroelectronics SAS
Equipment Name: 특정소출력 무선기기(무선데이터통신시스템용 무선기기)
Basic Model Number: STM32WB5MMGH
Certification No.: R-R-2AS-32WB5MMGH002
Manufacturer / Country of Origin: STMicroelectronics SAS / France
Date of manufacture: notation separately

11.10 NBTC certification

The Supplier Declaration of Conformity for NBTC in Thailand is registered as SD04450-24.



12 Important security notice

The STMicroelectronics group of companies (ST) places a high value on product security, which is why the ST product(s) identified in this documentation may be certified by various security certification bodies and/or may implement our own security measures as set forth herein. However, no level of security certification and/or built-in security measures can guarantee that ST products are resistant to all forms of attacks. As such, it is the responsibility of each of ST's customers to determine if the level of security provided in an ST product meets the customer needs both in relation to the ST product alone, as well as when combined with other components and/or software for the customer end product or application. In particular, take note that:

- ST products may have been certified by one or more security certification bodies, such as Platform Security Architecture (www.psacertified.org) and/or Security Evaluation standard for IoT Platforms (www.trustcb.com). For details concerning whether the ST product(s) referenced herein have received security certification along with the level and current status of such certification, either visit the relevant certification standards website or go to the relevant product page on www.st.com for the most up to date information. As the status and/or level of security certification for an ST product can change from time to time, customers should re-check security certification status/level as needed. If an ST product is not shown to be certified under a particular security standard, customers should not assume it is certified.
- Certification bodies have the right to evaluate, grant and revoke security certification in relation to ST products. These certification bodies are therefore independently responsible for granting or revoking security certification for an ST product, and ST does not take any responsibility for mistakes, evaluations, assessments, testing, or other activity carried out by the certification body with respect to any ST product.
- Industry-based cryptographic algorithms (such as AES, DES, or MD5) and other open standard technologies which may be used in conjunction with an ST product are based on standards which were not developed by ST. ST does not take responsibility for any flaws in such cryptographic algorithms or open technologies or for any methods which have been or may be developed to bypass, decrypt or crack such algorithms or technologies.
- While robust security testing may be done, no level of certification can absolutely guarantee protections against all attacks, including, for example, against advanced attacks which have not been tested for, against new or unidentified forms of attack, or against any form of attack when using an ST product outside of its specification or intended use, or in conjunction with other components or software which are used by customer to create their end product or application. ST is not responsible for resistance against such attacks. As such, regardless of the incorporated security features and/or any information or support that may be provided by ST, each customer is solely responsible for determining if the level of attacks tested for meets their needs, both in relation to the ST product alone and when incorporated into a customer end product or application.
- All security features of ST products (inclusive of any hardware, software, documentation, and the like), including but not limited to any enhanced security features added by ST, are provided on an "AS IS" BASIS. AS SUCH, TO THE EXTENT PERMITTED BY APPLICABLE LAW, ST DISCLAIMS ALL WARRANTIES, EXPRESS OR IMPLIED, INCLUDING BUT NOT LIMITED TO THE IMPLIED WARRANTIES OF MERCHANTABILITY OR FITNESS FOR A PARTICULAR PURPOSE, unless the applicable written and signed contract terms specifically provide otherwise.

Revision history

Table 7. **Document revision history**

Date	Revision	Changes
12-Nov-2020	1	Initial release.
16-Jul-2021	2	Added: • Power supply • SMPS • Clocks • Antenna • Two layer reference board design • BLE(RF_PHY) certification Updated: • Features • Figure 1. STM32WB5MMG module block diagram • Section 3.3: Clocks • Section 5: Pin description • STM32WB5MMG pin/ball definition • Section 6.2.2: Enclosure effects • Figure 8. Four layer reference board schematics • Section 7.4: Antenna radiation patterns and efficiency • Section 9.1: SiP-LGA86 package information • Section 11: Certification • Section 11.1: BLE(RF_PHY) certification
09-Nov-2022	3	Added: • Section 3.1: Versions • Section 3.5: One time programming (OTP) • Figure 8. Four layer reference board schematics for version X • Figure 9. Four layer PCB layout for version X • Figure 10. Two layer reference board schematics for version X • Figure 11. Two layer PCB layout for version X • Section 11.3: UKCA certification • Section 11.9: KC certification • Section 12: Important security notice Updated: • Cerfication images • Bluetooth Bluetooth® LE protocol version support throughout the document • Document title • Section Features • Certification logo representation • Section 1: Introduction • Section 2: Description • Split Section 3: Module overview into a separate section • Section 3.1: Versions • Figure 1. STM32WB5MMG module block diagram • Section 3.2.1: SMPS • Section 3.3: Clocks • Section 5: Pin description • Table 1. STM32WB5MMG pin/ball definition • Section 6.1: Pin recommendations • Section 6.2.4: Sensitive GPIOs • Table 5. SiP-LGA86 - Mechanical data • Figure 8. Four layer reference board schematics for version Y • Figure 10. Four layer PCB layout for version Y • Figure 12. Two layer reference board schematics for version Y • Figure 14. Two layer PCB layout for version Y

Date	Revision	Changes
09-Nov-2022	3	• Section 9.3: Device marking for SiP-LGA86 – Section 9.1: SiP-LGA86 package information – Table 5. SiP-LGA86 - Mechanical data • Section 9.3: Device marking for SiP-LGA86 – Figure 15. SiP-LGA86 marking example • Figure 15. SiP-LGA86 marking example • Section 8: Thermal characteristics • Section 11: Certification • Section 11.4: FCC certification • Section 11.5: ISED certification • Section 11.6: JRF certification • Section 11.7: NCC certification Removed: Solder reflow recommendations section
01-Mar-2023	4	Updated: • Product status • Figure 1. STM32WB5MMG module block diagram • Section 5: Pin description – Figure 2. STM32WB5MMG module pinout: bottom view • Section 6.1: Pin recommendations • Section 6.2.5: Four layer reference board design – Figure 8. Four layer reference board schematics for version X • Section 6.2.6: Two layer reference board design – Figure 10. Two layer reference board schematics for version X • Section 7.4: Antenna radiation patterns and efficiency – Added Figure 13. Antenna radiation patterns • Section 9.2: Board design Removed: • "Four layer reference board schematics for version Y" figure • "Four layer PCB layout for version Y" figure • "Two layer reference board schematics for version Y" figure • "Two layer PCB layout for version Y" figure
10-Mar-2023	5	Updated: • Figure 11. Two layer PCB layout for version X • Section 3.2: Power supply • Section 5: Pin description
21-Sep-2023	6	Updated: • Title • Figure 8. Four layer reference board schematics for version X • Figure 10. Two layer reference board schematics for version X • References to DS11929
26-Feb-2024	7	Updated: • Figure 13. Antenna radiation patterns • Table 6. Certification status • Section 11.4: FCC certification • Section 11.5: ISED certification • Section 11.7: NCC certification • Section 11.8: SRRC certification Removed Tape and reel packing

Date	Revision	Changes
18-Jun-2025	8	Updated: • Referenced to Bluetooth standard • Cover image • Section Features • Figure 4. STM32WB5MMG board placement • Section 7.4: Antenna radiation patterns and efficiency • Section 10: Ordering information • Section 11: Certification Added: • Section 11.10: NBTC certification

Contents

1 **Introduction** 2
2 **Description** 3
3 **Module overview** 4
3.1 Versions 4
3.2 Power supply 4
3.2.1 SMPS 4
3.3 Clocks 5
3.4 Antenna 5
3.5 One time programming (OTP) 5
4 **Available peripherals** 6
5 **Pin description** 7
6 **Recommendations** 10
6.1 Pin recommendations 10
6.2 Layout recommendations 11
6.2.1 STM32WB5MMG placement 11
6.2.2 Enclosure effects 11
6.2.3 Ground plane 13
6.2.4 Sensitive GPIOs 13
6.2.5 Four layer reference board design 13
6.2.6 Two layer reference board design 16
7 **Electrical characteristics** 19
7.1 Operating conditions 19
7.2 Power consumption 19
7.3 RF characteristics 19
7.4 Antenna radiation patterns and efficiency 19
8 **Thermal characteristics** 20
9 **Package information** 21
9.1 SiP-LGA86 package information 21
9.2 Board design 22
9.3 Device marking for SiP-LGA86 23
10 **Ordering information** 24
11 **Certification** 25
11.1 Bluetooth® LE (RF_PHY) certification 25
11.2 CE certification 25

11.3 UKCA certification 26
11.4 FCC certification 26
11.5 ISED certification 27
11.6 JRF certification 27
11.7 NCC certification 27
11.8 SRRC certification 28
11.9 KC certification 28
11.10 NBTC certification 28
12 Important security notice 29
Revision history 30

List of tables

Table 1. STM32WB5MMG pin/ball definition . . . 8
Table 2. Minimum enclosure dimensions (mm) . . . 12
Table 3. STM32WB55VGY operating conditions . . . 19
Table 4. STM32WB5MMG thermal characteristics . . . 20
Table 5. SiP-LGA86 - Mechanical data . . . 22
Table 6. Certification status . . . 25
Table 7. Document revision history . . . 30

List of figures

Figure 1. STM32WB5MMG module block diagram . . . 4
Figure 2. STM32WB5MMG module pinout: bottom view . . . 7
Figure 3. Reset circuit . . . 10
Figure 4. STM32WB5MMG board placement . . . 11
Figure 5. Conductive enclosure around the antenna . . . 12
Figure 6. STM32WB5MMG ground plane layout . . . 13
Figure 7. Sensitive GPIO location . . . 13
Figure 8. Four layer reference board schematics for version X . . . 14
Figure 9. Four layer PCB layout for version X . . . 15
Figure 10. Two layer reference board schematics for version X . . . 17
Figure 11. Two layer PCB layout for version X . . . 18
Figure 12. SiP-LGA86 - Outline . . . 21
Figure 13. SiP-LGA86 marking example . . . 23
Figure 14. CE certification logo . . . 25
Figure 15. UKCA certification logo . . . 26
Figure 16. JRF certification logo . . . 27
Figure 17. NCC certification logo . . . 27

IMPORTANT NOTICE – READ CAREFULLY

STMicroelectronics NV and its subsidiaries (“ST”) reserve the right to make changes, corrections, enhancements, modifications, and improvements to ST products and/or to this document at any time without notice. Purchasers should obtain the latest relevant information on ST products before placing orders. ST products are sold pursuant to ST’s terms and conditions of sale in place at the time of order acknowledgment.

Purchasers are solely responsible for the choice, selection, and use of ST products and ST assumes no liability for application assistance or the design of purchasers’ products.

No license, express or implied, to any intellectual property right is granted by ST herein.

Resale of ST products with provisions different from the information set forth herein shall void any warranty granted by ST for such product.

ST and the ST logo are trademarks of ST. For additional information about ST trademarks, refer to www.st.com/trademarks. All other product or service names are the property of their respective owners.

Information in this document supersedes and replaces information previously supplied in any prior versions of this document.

© 2025 STMicroelectronics – All rights reserved