CC3200 SimpleLink™ Wi-Fi® and IoT Solution with MCU- Antenna BoosterPack

User's Guide

Literature Number: SWRU387
October 2014

Contents

1 Getting Started 4
1.1 Introduction 4
1.2 Key Features 4
1.3 What's Included 4
2 Hardware Overview 5
2.1 Connectors 5
2.1.1 2x10 pin Launchpad headers (P1, P2, P3, P4) 5
2.1.2 U.Fl Connector 5
2.1.3 Antenna and Selection 6
3 Connecting to the CC3200-LAUNCHXL 7
3.1 Configuration Required on the CC3200-LAUNCHXL 7
3.2 Interfacing with the CC3200 Launch Pad (CC3200-LAUNCHXL) 8
4 Additional Resources 9
4.1 Schematics and Board Files 9
4.2 Software Examples and Wiki Pages 9
4.2.1 Pre-Requisites 9
4.2.2 Software Example with CC3200 Launchpad 9
4.2.3 Software Example with CC3100 Boosterpack 10
4.3 The Community 11
5 Errata 12

Copyright © 2014, Texas Instruments Incorporated

List of Figures

1-1. CC3ANTENNABOOST 4
2-1. Connectors 5
2-2. Antenna Locations 6
3-1. Jumper J15 7
3-2. U.Fl connector J18 7
3-3. Correctly Connected CC3200-LAUNCHXL and CC3ANTENNABOOST Boards 8
4-1. Connected CC3200-LAUNCHXL and CC3ANTENNABOOST Boards 10
4-2. Correctly Connected CC3100-BOOST and CC3ANTENNABOOST Boards, with the MSP430F5529LP 11
4-3. Diagram of the Boards' Connections 11

List of Tables

2-1. Antenna Selection 6

Copyright © 2014, Texas Instruments Incorporated

Getting Started

1.1 Introduction

The SimpleLink™ Wi-Fi® Antenna BoosterPack (CC3ANTENNABOOST) enables the evaluation and development of end applications requiring Antenna diversity. When used with the SimpleLink Wi-Fi CC3200 Launchpad (CC3200-LAUNCHXL) or the CC3100 Boosterpack (CC3100-BOOST) rev 3.1 or higher, the user can select the best antenna to use, based on the signal strength of the connection with a specific access point. There are two sets of orthogonal antennas on the board. The board supports the selection of an on-board chip antenna, or external Antenna via. u.Fl connector. This board is useful for Wi-Fi Antenna evaluation for applications requiring an extended WiFi range. All references in this document are with respect to the CC31xx_ANTENNA_DIVERSITY_BOARD Rev3.x. The user may need external antenna to connect to the board.

1.2 Key Features

- SKY13351-378LF, Skywork's 2.0-6.0 GHz GaAs SPDT Switch
- SN74AVCH2T45, Dual Bit Dual Supply Bus Transceiver with Bus Hold Feature
- 74AHC1GU04, Unbuffered Single Inverter Gate
- Provision to Select Horizontal Antenna and Vertical Antenna
- On-board U.Fl connector for Conducted Testing
- No on-board LDO. Once the CC3ANTENNABOOST and the CC3200-LAUNCHXL are connected, the CC3200-LAUNCHXL sources power to the CC3ANTENNABOOST. Specifically, the CC3200-LAUNCHXL provides power to the inverter and transceiver on the CC3ANTENNABOOST

1.3 What's Included

- CC3ANTENNABOOST
- U.Fl-U.Fl Connector cable
- Quick Start guide

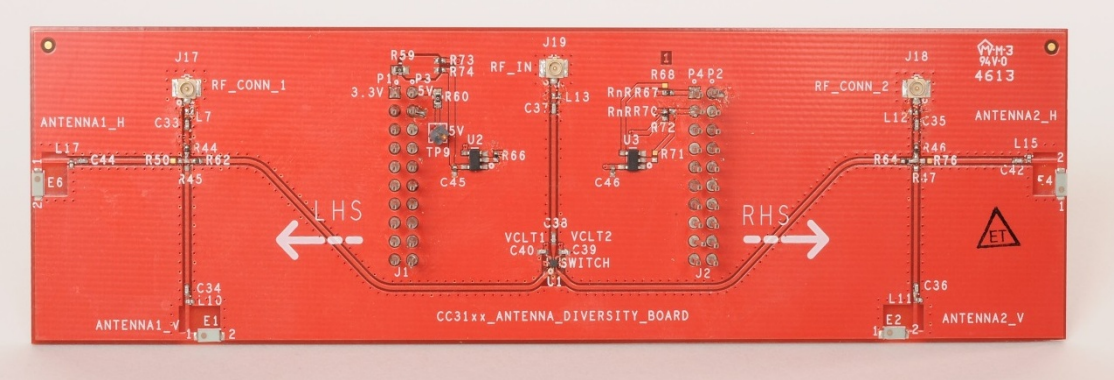

Figure 1-1. CC3ANTENNABOOST

Copyright © 2014, Texas Instruments Incorporated

Hardware Overview

2.1 Connectors

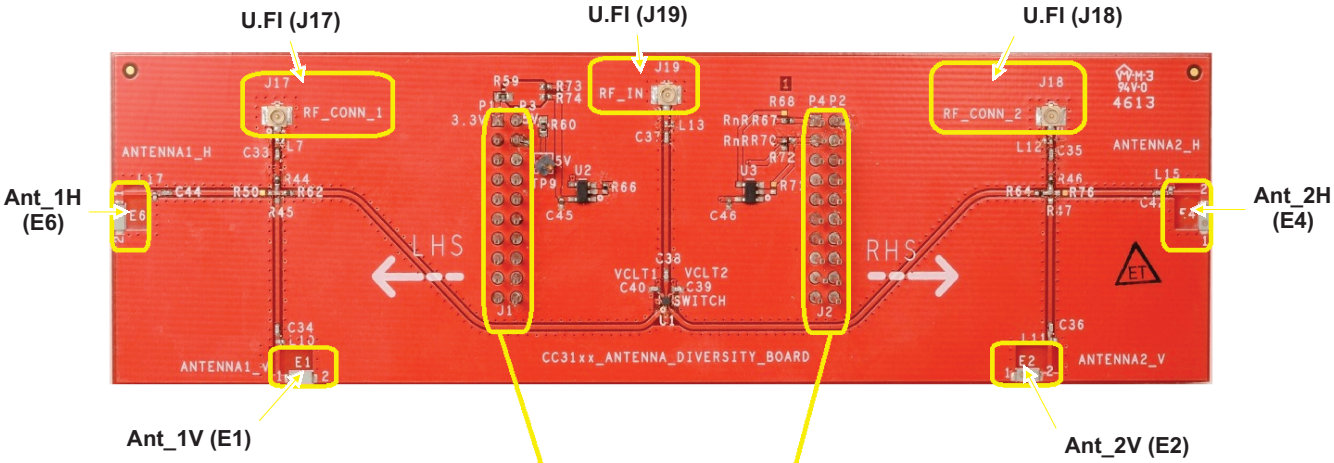

P1		P3	
Ref	Signal	Ref	Signal
1	3.3V	1	5V
2	NC	2	GND
3	NC	3	NC
4	NC	4	NC
5	NC	5	NC
6	NC	6	NC
7	NC	7	NC
8	NC	8	NC
9	NC	9	NC
10	NC	10	NC

P4		P2	
Ref	Signal	Ref	Signal
1	ANTSEL1	1	GND
2	ANTSEL2	2	NC
3	NC	3	NC
4	NC	4	NC
5	NC	5	NC
6	NC	6	NC
7	NC	7	NC
8	NC	8	NC
9	NC	9	NC
10	NC	10	NC

Figure 2-1. Connectors

2.1.1 2x10 pin Launchpad headers (P1, P2, P3, P4)

The 20 pin connector connects the CC3ANTENNABOOST board to the CC3200-LAUNCHXL. The 2x 20 pin connector provides the necessary power to the antenna boosterpack from the Launchpad board and provides access to the antenna selection GPIOs.

The white triangle at P1 must be matched with the CC3200 LP during connection.

2.1.1.1 Power Connector

The CC3ANTENNABOOST board is powered directly from 3.3 V sourced from the Launchpad. No special care is needed when the Launchpad board is powered from the USB supply.

2.1.2 U.FI Connector

U.FI connectors, J17 and J18 are available on-board and can be used for conducted testing.

Copyright © 2014, Texas Instruments Incorporated

2.1.3 Antenna and Selection

There are several antennas on the CC32ANTENNABOOST board, to help the user test the performance of the CC3200.

- Two horizontal (ANTENNA1_H(E6), ANTENNA2_H(E4))
- Two vertical (ANTENNA1_V(E1), ANTENNA2_V(E2))

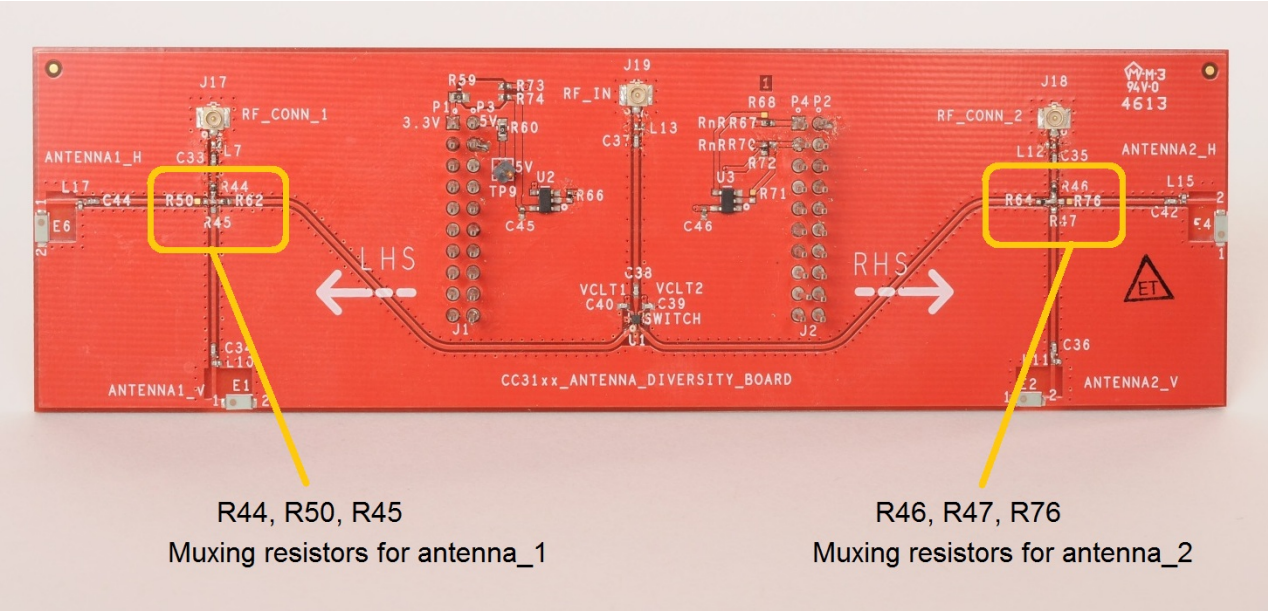

Figure 2-2. Antenna Locations

Follow Table 2-1 for selection of antenna/U.Fl. (Populate: √, De-populate: X)

Table 2-1. Antenna Selection

Selection of	R47	R76	R46
Horizontal Antenna (E2)	√	X	X
Vertical Antenna (E4)	X	√	X
U.Fl Connector (J18)	X	X	√
Selection of	**R45**	**R50**	**R44**
Horizontal Antenna (E1)	√	X	X
Vertical Antenna (E6)	X	√	X
U.Fl Connector (J17)	X	X	√

Copyright © 2014, Texas Instruments Incorporated

Connecting to the CC3200-LAUNCHXL

3.1 Configuration Required on the CC3200-LAUNCHXL

CC3ANTENNABOOST should be connected to CC3200-LAUNCHXL with the following default configurations:

1. Once the binaries are flashed, remove jumper J15 on SOP2 of CC3200-LAUNCHXL and reset the board (refer to the green circle in Figure 3-1).

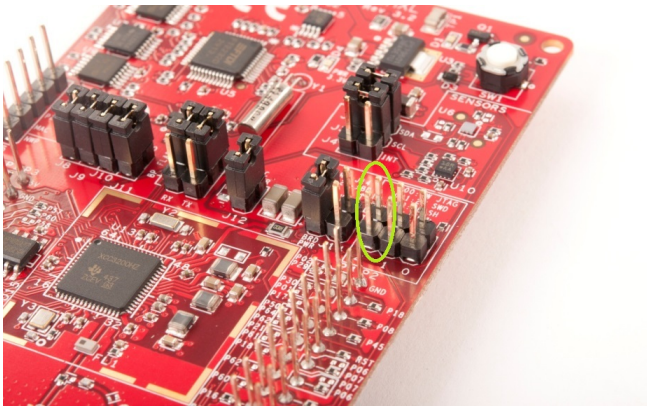

Figure 3-1. Jumper J15

2. Ensure the path to the U.Fl connector (J18) is selected. Populate the appropriate selection resistor. On CC3200-LAUNCHXL 4.0-A, populate R110 and depopulate R111 to select U.Fl connector J18.

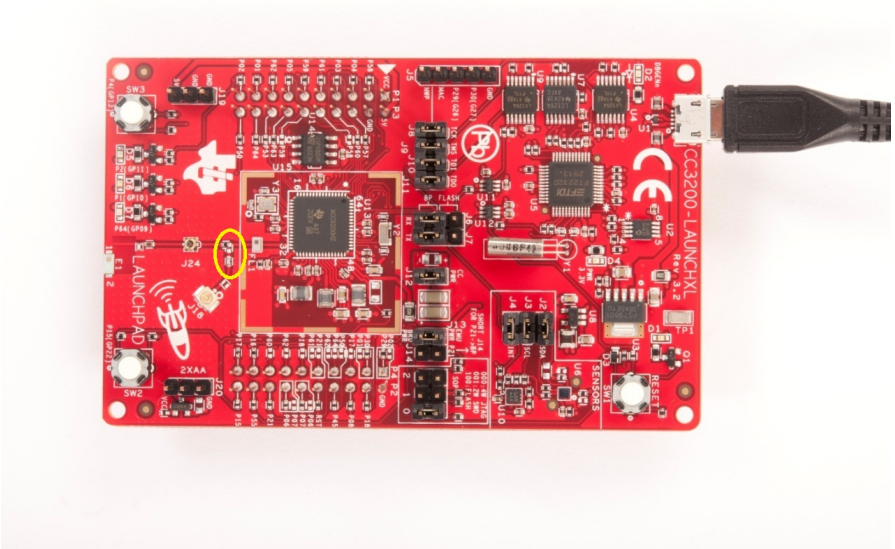

Figure 3-2. U.Fl connector J18

Copyright © 2014, Texas Instruments Incorporated

3.2 Interfacing with the CC3200 Launch Pad (CC3200-LAUNCHXL)

The CC3ANTENNABOOST board can be directly connected to a CC3200 Launchpad by using two 2x10 pin header connectors. A white triangle marked on the board (indicated by an arrow) indicates the pin-1 (of P1) that must be aligned with the triangle on the CC3200 Launchpad (pin 1 of P1). Failure to align the boards correctly before power-up can damage the boards.

Connect J18 on CC3200-LAUNCHXL 4.0-A to J19 on CC3ANTENNABOOST 2.0-A with U.Fl-U.Fl connector (in white color). The correctly connected boards are shown in Figure 3-3.

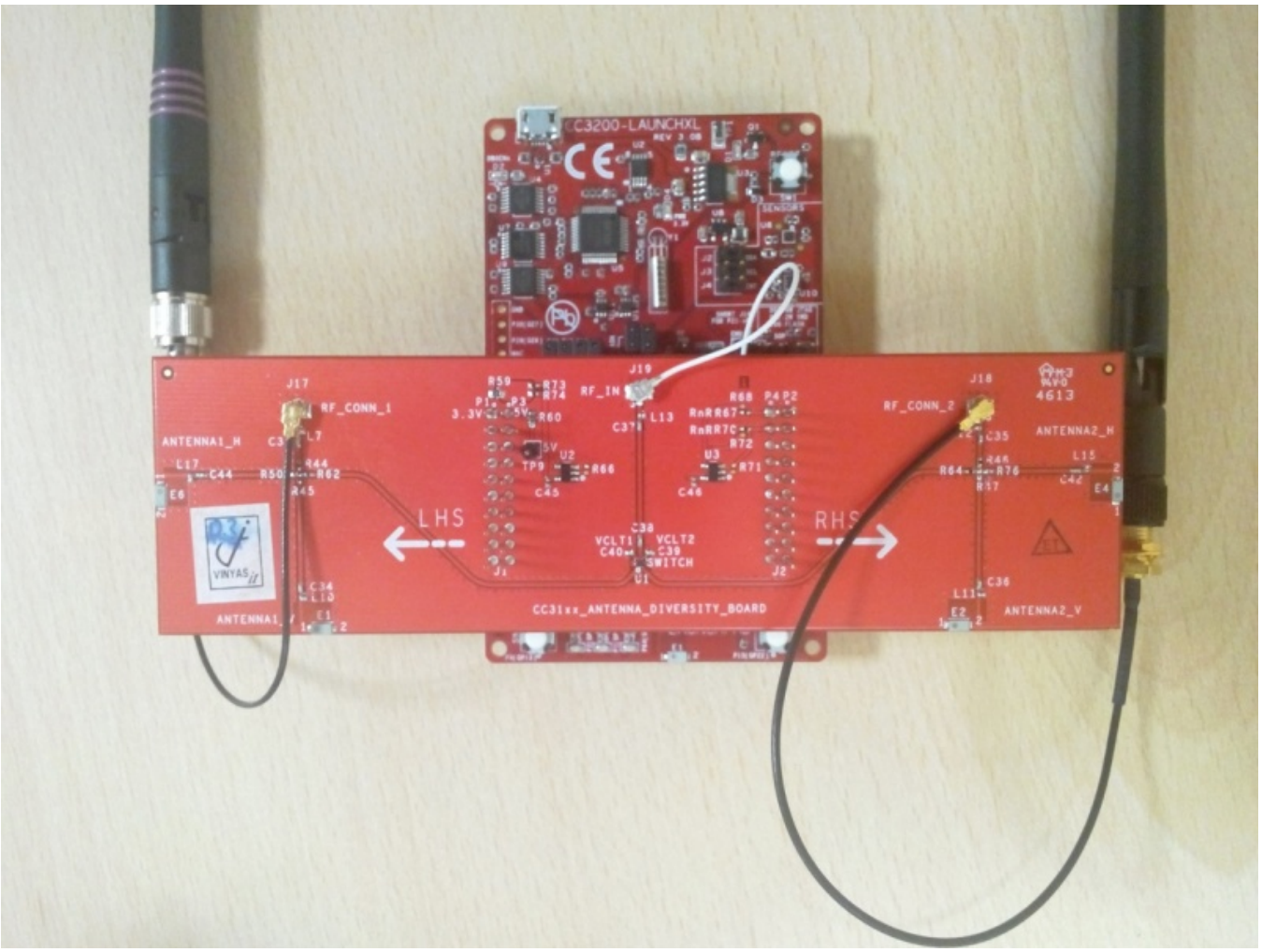

Figure 3-3. Correctly Connected CC3200-LAUNCHXL and CC3ANTENNABOOST Boards

Copyright © 2014, Texas Instruments Incorporated

Additional Resources

4.1 Schematics and Board Files

The latest design files, which include the gerber files, schematic, bill of materials, PCB layout, and assembly drawings, can be obtained from http://www.ti.com/tool/tidc-cc3antenna-selection.

4.2 Software Examples and Wiki Pages

4.2.1 Pre-Requisites

Prerequisites (Hardware):

- 1x CC3ANTENNABOOST 2.0-A
- 1x U.Fl-U.Fl connector
- 2x U.Fl-SMA connector
- Android device (for Smart Config)
- Access point
- 2x External antenna

Prerequisite (Software):

- Uniflash tool
- Smart Config Android application

4.2.2 Software Example with CC3200 Launchpad

In addition to the pre-requisites mentioned above, the user must acquire:

- CC3200 Launchpad Ver 3.2 and above
- CC3200 SDK

This link provides an example that demonstrates 'Antenna Selection' on a CC3200-LAUNCHXL+CC3ANTENNABOOST setup. The setup comprises of one CC3200-LAUNCHXL (in STA mode) and one CC3ANTENNABOOST.

Copyright © 2014, Texas Instruments Incorporated

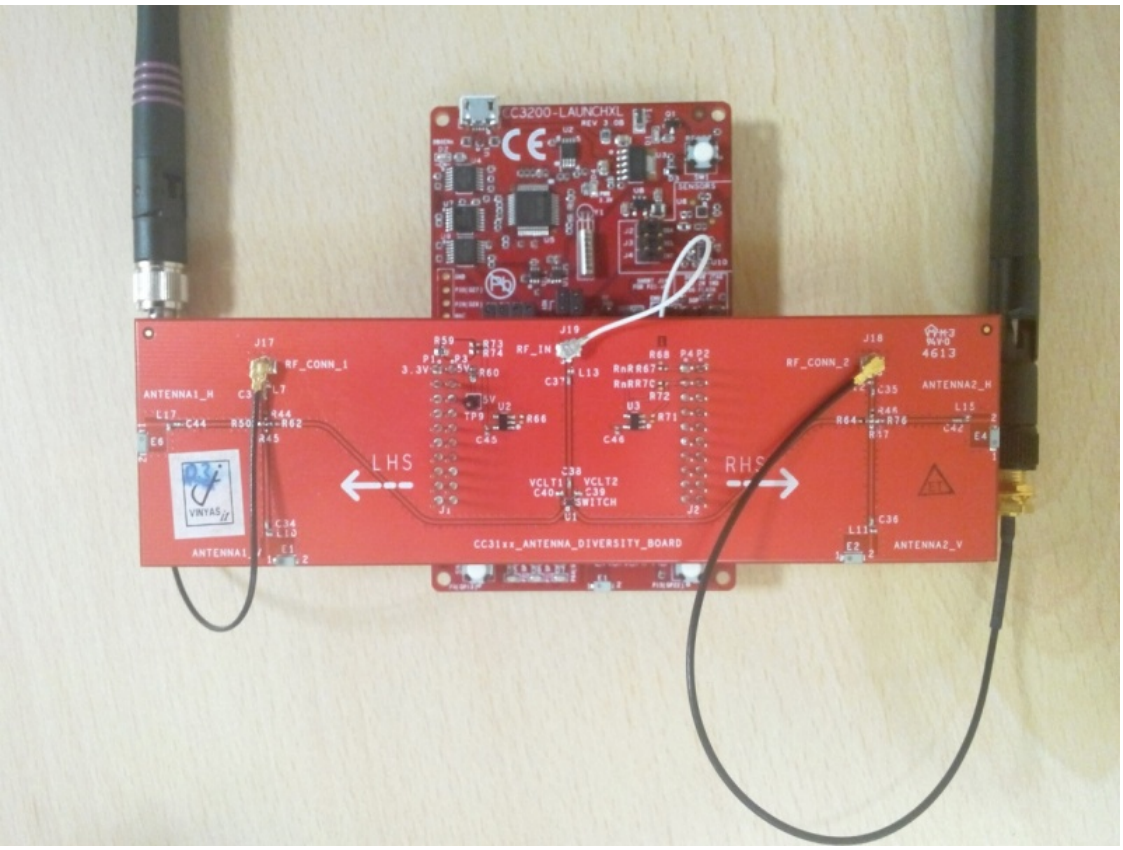

Figure 4-1. Connected CC3200-LAUNCHXL and CC3ANTENNABOOST Boards

4.2.3 Software Example with CC3100 Boosterpack

In addition to the pre-requisites mentioned above, the user must acquire:

- CC3100 Boosterpack Ver 3.3 and above
- An MCU such as the MSP430FR5529
- CC3100 SDK

This link provides an example that demonstrates 'Antenna Selection' on a CC3100BOOST 3.3-A + CC3ANTENNABOOST setup. The setup comprises of one CC3100BOOST, HOST-MCU and CC3ANTENNABOOST.

Copyright © 2014, Texas Instruments Incorporated

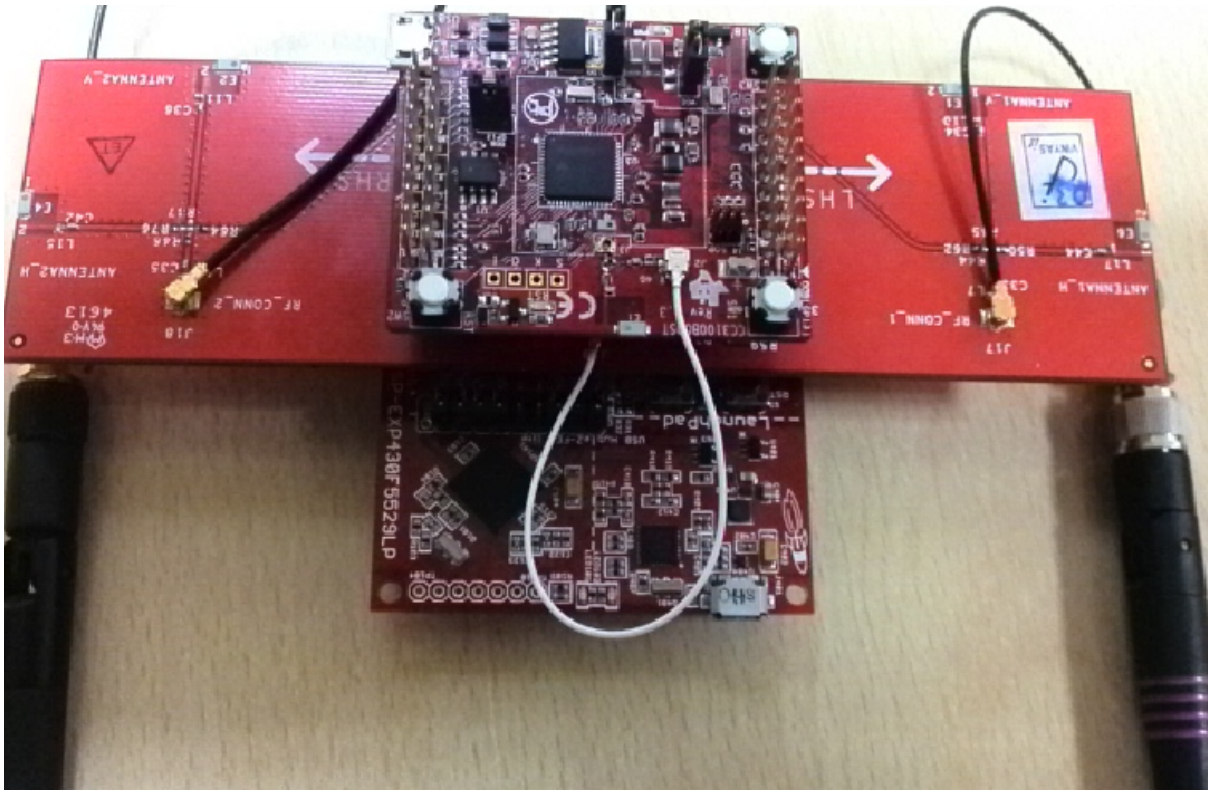

Figure 4-2. Correctly Connected CC3100-BOOST and CC3ANTENNABOOST Boards, with the MSP430F5529LP

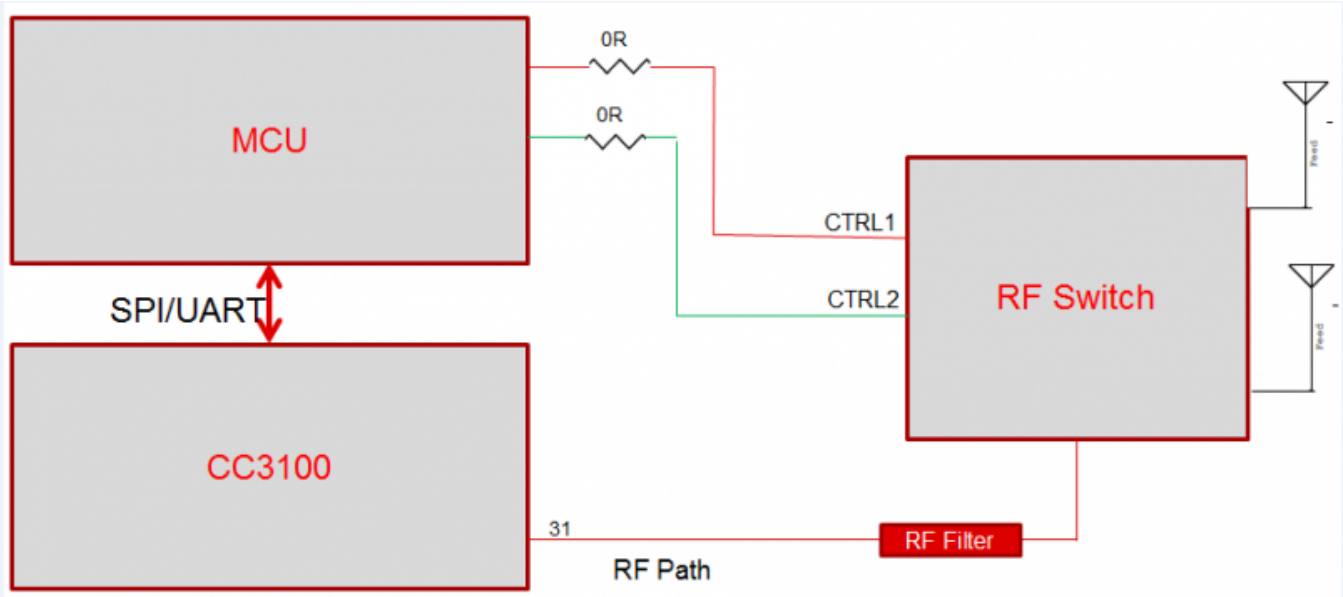

Figure 4-3. Diagram of the Boards' Connections

4.3 The Community

Search the forums at e2e.ti.com. If you cannot find your answer, post your question to the community.

Copyright © 2014, Texas Instruments Incorporated

Errata

R62 and R64 are populated with 22pF capacitor (P/N 04025U220CAT2A). This change is not reflected in silkscreen.

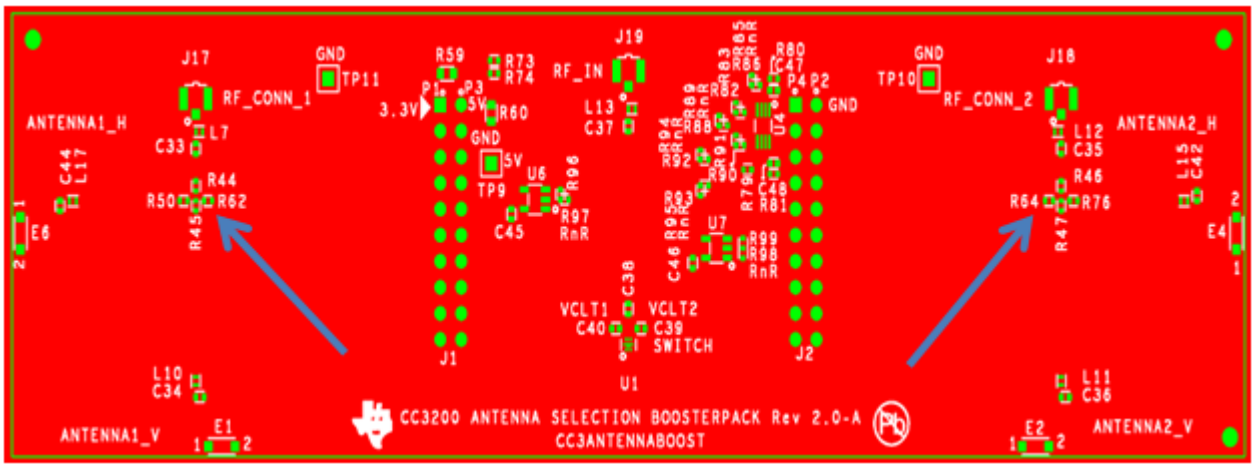

Copyright © 2014, Texas Instruments Incorporated

STANDARD TERMS AND CONDITIONS FOR EVALUATION MODULES

1. *Delivery:* TI delivers TI evaluation boards, kits, or modules, including any accompanying demonstration software, components, or documentation (collectively, an "EVM" or "EVMs") to the User ("User") in accordance with the terms and conditions set forth herein. Acceptance of the EVM is expressly subject to the following terms and conditions.

   1.1 EVMs are intended solely for product or software developers for use in a research and development setting to facilitate feasibility evaluation, experimentation, or scientific analysis of TI semiconductors products. EVMs have no direct function and are not finished products. EVMs shall not be directly or indirectly assembled as a part or subassembly in any finished product. For clarification, any software or software tools provided with the EVM ("Software") shall not be subject to the terms and conditions set forth herein but rather shall be subject to the applicable terms and conditions that accompany such Software

   1.2 EVMs are not intended for consumer or household use. EVMs may not be sold, sublicensed, leased, rented, loaned, assigned, or otherwise distributed for commercial purposes by Users, in whole or in part, or used in any finished product or production system.

2 *Limited Warranty and Related Remedies/Disclaimers*:

   2.1 These terms and conditions do not apply to Software. The warranty, if any, for Software is covered in the applicable Software License Agreement.

   2.2 TI warrants that the TI EVM will conform to TI's published specifications for ninety (90) days after the date TI delivers such EVM to User. Notwithstanding the foregoing, TI shall not be liable for any defects that are caused by neglect, misuse or mistreatment by an entity other than TI, including improper installation or testing, or for any EVMs that have been altered or modified in any way by an entity other than TI. Moreover, TI shall not be liable for any defects that result from User's design, specifications or instructions for such EVMs. Testing and other quality control techniques are used to the extent TI deems necessary or as mandated by government requirements. TI does not test all parameters of each EVM.

   2.3 If any EVM fails to conform to the warranty set forth above, TI's sole liability shall be at its option to repair or replace such EVM, or credit User's account for such EVM. TI's liability under this warranty shall be limited to EVMs that are returned during the warranty period to the address designated by TI and that are determined by TI not to conform to such warranty. If TI elects to repair or replace such EVM, TI shall have a reasonable time to repair such EVM or provide replacements. Repaired EVMs shall be warranted for the remainder of the original warranty period. Replaced EVMs shall be warranted for a new full ninety (90) day warranty period.

3 *Regulatory Notices:*

   3.1 *United States*

      3.1.1 *Notice applicable to EVMs not FCC-Approved:*

      This kit is designed to allow product developers to evaluate electronic components, circuitry, or software associated with the kit to determine whether to incorporate such items in a finished product and software developers to write software applications for use with the end product. This kit is not a finished product and when assembled may not be resold or otherwise marketed unless all required FCC equipment authorizations are first obtained. Operation is subject to the condition that this product not cause harmful interference to licensed radio stations and that this product accept harmful interference. Unless the assembled kit is designed to operate under part 15, part 18 or part 95 of this chapter, the operator of the kit must operate under the authority of an FCC license holder or must secure an experimental authorization under part 5 of this chapter.

      3.1.2 *For EVMs annotated as FCC – FEDERAL COMMUNICATIONS COMMISSION Part 15 Compliant:*

      CAUTION

      This device complies with part 15 of the FCC Rules. Operation is subject to the following two conditions: (1) This device may not cause harmful interference, and (2) this device must accept any interference received, including interference that may cause undesired operation.

      Changes or modifications not expressly approved by the party responsible for compliance could void the user's authority to operate the equipment.

      FCC Interference Statement for Class A EVM devices

      NOTE: This equipment has been tested and found to comply with the limits for a Class A digital device, pursuant to part 15 of the FCC Rules. These limits are designed to provide reasonable protection against harmful interference when the equipment is operated in a commercial environment. This equipment generates, uses, and can radiate radio frequency energy and, if not installed and used in accordance with the instruction manual, may cause harmful interference to radio communications. Operation of this equipment in a residential area is likely to cause harmful interference in which case the user will be required to correct the interference at his own expense.

Copyright © 2014, Texas Instruments Incorporated

STANDARD TERMS AND CONDITIONS FOR EVALUATION MODULES (continued)

FCC Interference Statement for Class B EVM devices

NOTE: This equipment has been tested and found to comply with the limits for a Class B digital device, pursuant to part 15 of the FCC Rules. These limits are designed to provide reasonable protection against harmful interference in a residential installation. This equipment generates, uses and can radiate radio frequency energy and, if not installed and used in accordance with the instructions, may cause harmful interference to radio communications. However, there is no guarantee that interference will not occur in a particular installation. If this equipment does cause harmful interference to radio or television reception, which can be determined by turning the equipment off and on, the user is encouraged to try to correct the interference by one or more of the following measures:

- *Reorient or relocate the receiving antenna.*
- *Increase the separation between the equipment and receiver.*
- *Connect the equipment into an outlet on a circuit different from that to which the receiver is connected.*
- *Consult the dealer or an experienced radio/TV technician for help.*

3.2 *Canada*

3.2.1 *For EVMs issued with an Industry Canada Certificate of Conformance to RSS-210*

Concerning EVMs Including Radio Transmitters:

This device complies with Industry Canada license-exempt RSS standard(s). Operation is subject to the following two conditions: (1) this device may not cause interference, and (2) this device must accept any interference, including interference that may cause undesired operation of the device.

Concernant les EVMs avec appareils radio:

Le présent appareil est conforme aux CNR d'Industrie Canada applicables aux appareils radio exempts de licence. L'exploitation est autorisée aux deux conditions suivantes: (1) l'appareil ne doit pas produire de brouillage, et (2) l'utilisateur de l'appareil doit accepter tout brouillage radioélectrique subi, même si le brouillage est susceptible d'en compromettre le fonctionnement.

Concerning EVMs Including Detachable Antennas:

Under Industry Canada regulations, this radio transmitter may only operate using an antenna of a type and maximum (or lesser) gain approved for the transmitter by Industry Canada. To reduce potential radio interference to other users, the antenna type and its gain should be so chosen that the equivalent isotropically radiated power (e.i.r.p.) is not more than that necessary for successful communication. This radio transmitter has been approved by Industry Canada to operate with the antenna types listed in the user guide with the maximum permissible gain and required antenna impedance for each antenna type indicated. Antenna types not included in this list, having a gain greater than the maximum gain indicated for that type, are strictly prohibited for use with this device.

Concernant les EVMs avec antennes détachables

Conformément à la réglementation d'Industrie Canada, le présent émetteur radio peut fonctionner avec une antenne d'un type et d'un gain maximal (ou inférieur) approuvé pour l'émetteur par Industrie Canada. Dans le but de réduire les risques de brouillage radioélectrique à l'intention des autres utilisateurs, il faut choisir le type d'antenne et son gain de sorte que la puissance isotrope rayonnée équivalente (p.i.r.e.) ne dépasse pas l'intensité nécessaire à l'établissement d'une communication satisfaisante. Le présent émetteur radio a été approuvé par Industrie Canada pour fonctionner avec les types d'antenne énumérés dans le manuel d'usage et ayant un gain admissible maximal et l'impédance requise pour chaque type d'antenne. Les types d'antenne non inclus dans cette liste, ou dont le gain est supérieur au gain maximal indiqué, sont strictement interdits pour l'exploitation de l'émetteur

3.3 *Japan*

3.3.1 *Notice for EVMs delivered in Japan:* Please see http://www.tij.co.jp/lsds/ti_ja/general/eStore/notice_01.page 日本国内に輸入される評価用キット、ボードについては、次のところをご覧ください。
http://www.tij.co.jp/lsds/ti_ja/general/eStore/notice_01.page

3.3.2 *Notice for Users of EVMs Considered "Radio Frequency Products" in Japan:* EVMs entering Japan are NOT certified by TI as conforming to Technical Regulations of Radio Law of Japan.

If User uses EVMs in Japan, User is required by Radio Law of Japan to follow the instructions below with respect to EVMs:

1. Use EVMs in a shielded room or any other test facility as defined in the notification #173 issued by Ministry of Internal Affairs and Communications on March 28, 2006, based on Sub-section 1.1 of Article 6 of the Ministry's Rule for Enforcement of Radio Law of Japan,
2. Use EVMs only after User obtains the license of Test Radio Station as provided in Radio Law of Japan with respect to EVMs, or
3. Use of EVMs only after User obtains the Technical Regulations Conformity Certification as provided in Radio Law of Japan with respect to EVMs. Also, do not transfer EVMs, unless User gives the same notice above to the transferee. Please note that if User does not follow the instructions above, User will be subject to penalties of Radio Law of Japan.

Copyright © 2014, Texas Instruments Incorporated

STANDARD TERMS AND CONDITIONS FOR EVALUATION MODULES (continued)

【無線電波を送信する製品の開発キットをお使いになる際の注意事項】

本開発キットは技術基準適合証明を受けておりません。

本製品のご使用に際しては、電波法遵守のため、以下のいずれかの措置を取っていただく必要がありますのでご注意ください。

1. 電波法施行規則第6条第1項第1号に基づく平成18年3月28日総務省告示第173号で定められた電波暗室等の試験設備でご使用いただく。
2. 実験局の免許を取得後ご使用いただく。
3. 技術基準適合証明を取得後ご使用いただく。

なお、本製品は、上記の「ご使用にあたっての注意」を譲渡先、移転先に通知しない限り、譲渡、移転できないものとします。

上記を遵守頂けない場合は、電波法の罰則が適用される可能性があることをご留意ください。

日本テキサス・インスツルメンツ株式会社

東京都新宿区西新宿６丁目２４番１号

西新宿三井ビル

3.3.3 *Notice for EVMs for Power Line Communication:* Please see http://www.tij.co.jp/lsds/ti_ja/general/eStore/notice_02.page

電力線搬送波通信についての開発キットをお使いになる際の注意事項については、次のところをご覧ください。http://www.tij.co.jp/lsds/ti_ja/general/eStore/notice_02.page

4 *EVM Use Restrictions and Warnings:*

4.1 EVMS ARE NOT FOR USE IN FUNCTIONAL SAFETY AND/OR SAFETY CRITICAL EVALUATIONS, INCLUDING BUT NOT LIMITED TO EVALUATIONS OF LIFE SUPPORT APPLICATIONS.

4.2 User must read and apply the user guide and other available documentation provided by TI regarding the EVM prior to handling or using the EVM, including without limitation any warning or restriction notices. The notices contain important safety information related to, for example, temperatures and voltages.

4.3 *Safety-Related Warnings and Restrictions:*

4.3.1 User shall operate the EVM within TI's recommended specifications and environmental considerations stated in the user guide, other available documentation provided by TI, and any other applicable requirements and employ reasonable and customary safeguards. Exceeding the specified performance ratings and specifications (including but not limited to input and output voltage, current, power, and environmental ranges) for the EVM may cause personal injury or death, or property damage. If there are questions concerning performance ratings and specifications, User should contact a TI field representative prior to connecting interface electronics including input power and intended loads. Any loads applied outside of the specified output range may also result in unintended and/or inaccurate operation and/or possible permanent damage to the EVM and/or interface electronics. Please consult the EVM user guide prior to connecting any load to the EVM output. If there is uncertainty as to the load specification, please contact a TI field representative. During normal operation, even with the inputs and outputs kept within the specified allowable ranges, some circuit components may have elevated case temperatures. These components include but are not limited to linear regulators, switching transistors, pass transistors, current sense resistors, and heat sinks, which can be identified using the information in the associated documentation. When working with the EVM, please be aware that the EVM may become very warm.

4.3.2 EVMs are intended solely for use by technically qualified, professional electronics experts who are familiar with the dangers and application risks associated with handling electrical mechanical components, systems, and subsystems. User assumes all responsibility and liability for proper and safe handling and use of the EVM by User or its employees, affiliates, contractors or designees. User assumes all responsibility and liability to ensure that any interfaces (electronic and/or mechanical) between the EVM and any human body are designed with suitable isolation and means to safely limit accessible leakage currents to minimize the risk of electrical shock hazard. User assumes all responsibility and liability for any improper or unsafe handling or use of the EVM by User or its employees, affiliates, contractors or designees.

4.4 User assumes all responsibility and liability to determine whether the EVM is subject to any applicable international, federal, state, or local laws and regulations related to User's handling and use of the EVM and, if applicable, User assumes all responsibility and liability for compliance in all respects with such laws and regulations. User assumes all responsibility and liability for proper disposal and recycling of the EVM consistent with all applicable international, federal, state, and local requirements.

5. *Accuracy of Information:* To the extent TI provides information on the availability and function of EVMs, TI attempts to be as accurate as possible. However, TI does not warrant the accuracy of EVM descriptions, EVM availability or other information on its websites as accurate, complete, reliable, current, or error-free.

Copyright © 2014, Texas Instruments Incorporated

STANDARD TERMS AND CONDITIONS FOR EVALUATION MODULES (continued)

6. *Disclaimers:*
   6.1 EXCEPT AS SET FORTH ABOVE, EVMS AND ANY WRITTEN DESIGN MATERIALS PROVIDED WITH THE EVM (AND THE DESIGN OF THE EVM ITSELF) ARE PROVIDED "AS IS" AND "WITH ALL FAULTS." TI DISCLAIMS ALL OTHER WARRANTIES, EXPRESS OR IMPLIED, REGARDING SUCH ITEMS, INCLUDING BUT NOT LIMITED TO ANY IMPLIED WARRANTIES OF MERCHANTABILITY OR FITNESS FOR A PARTICULAR PURPOSE OR NON-INFRINGEMENT OF ANY THIRD PARTY PATENTS, COPYRIGHTS, TRADE SECRETS OR OTHER INTELLECTUAL PROPERTY RIGHTS.
   6.2 EXCEPT FOR THE LIMITED RIGHT TO USE THE EVM SET FORTH HEREIN, NOTHING IN THESE TERMS AND CONDITIONS SHALL BE CONSTRUED AS GRANTING OR CONFERRING ANY RIGHTS BY LICENSE, PATENT, OR ANY OTHER INDUSTRIAL OR INTELLECTUAL PROPERTY RIGHT OF TI, ITS SUPPLIERS/LICENSORS OR ANY OTHER THIRD PARTY, TO USE THE EVM IN ANY FINISHED END-USER OR READY-TO-USE FINAL PRODUCT, OR FOR ANY INVENTION, DISCOVERY OR IMPROVEMENT MADE, CONCEIVED OR ACQUIRED PRIOR TO OR AFTER DELIVERY OF THE EVM.
7. *USER'S INDEMNITY OBLIGATIONS AND REPRESENTATIONS.* USER WILL DEFEND, INDEMNIFY AND HOLD TI, ITS LICENSORS AND THEIR REPRESENTATIVES HARMLESS FROM AND AGAINST ANY AND ALL CLAIMS, DAMAGES, LOSSES, EXPENSES, COSTS AND LIABILITIES (COLLECTIVELY, "CLAIMS") ARISING OUT OF OR IN CONNECTION WITH ANY HANDLING OR USE OF THE EVM THAT IS NOT IN ACCORDANCE WITH THESE TERMS AND CONDITIONS. THIS OBLIGATION SHALL APPLY WHETHER CLAIMS ARISE UNDER STATUTE, REGULATION, OR THE LAW OF TORT, CONTRACT OR ANY OTHER LEGAL THEORY, AND EVEN IF THE EVM FAILS TO PERFORM AS DESCRIBED OR EXPECTED.
8. *Limitations on Damages and Liability:*
   8.1 *General Limitations*. IN NO EVENT SHALL TI BE LIABLE FOR ANY SPECIAL, COLLATERAL, INDIRECT, PUNITIVE, INCIDENTAL, CONSEQUENTIAL, OR EXEMPLARY DAMAGES IN CONNECTION WITH OR ARISING OUT OF THESE TERMS ANDCONDITIONS OR THE USE OF THE EVMS PROVIDED HEREUNDER, REGARDLESS OF WHETHER TI HAS BEEN ADVISED OF THE POSSIBILITY OF SUCH DAMAGES. EXCLUDED DAMAGES INCLUDE, BUT ARE NOT LIMITED TO, COST OF REMOVAL OR REINSTALLATION, ANCILLARY COSTS TO THE PROCUREMENT OF SUBSTITUTE GOODS OR SERVICES, RETESTING, OUTSIDE COMPUTER TIME, LABOR COSTS, LOSS OF GOODWILL, LOSS OF PROFITS, LOSS OF SAVINGS, LOSS OF USE, LOSS OF DATA, OR BUSINESS INTERRUPTION. NO CLAIM, SUIT OR ACTION SHALL BE BROUGHT AGAINST TI MORE THAN ONE YEAR AFTER THE RELATED CAUSE OF ACTION HAS OCCURRED.
   8.2 *Specific Limitations.* IN NO EVENT SHALL TI'S AGGREGATE LIABILITY FROM ANY WARRANTY OR OTHER OBLIGATION ARISING OUT OF OR IN CONNECTION WITH THESE TERMS AND CONDITIONS, OR ANY USE OF ANY TI EVM PROVIDED HEREUNDER, EXCEED THE TOTAL AMOUNT PAID TO TI FOR THE PARTICULAR UNITS SOLD UNDER THESE TERMS AND CONDITIONS WITH RESPECT TO WHICH LOSSES OR DAMAGES ARE CLAIMED. THE EXISTENCE OF MORE THAN ONE CLAIM AGAINST THE PARTICULAR UNITS SOLD TO USER UNDER THESE TERMS AND CONDITIONS SHALL NOT ENLARGE OR EXTEND THIS LIMIT.
9. *Return Policy.* Except as otherwise provided, TI does not offer any refunds, returns, or exchanges. Furthermore, no return of EVM(s) will be accepted if the package has been opened and no return of the EVM(s) will be accepted if they are damaged or otherwise not in a resalable condition. If User feels it has been incorrectly charged for the EVM(s) it ordered or that delivery violates the applicable order, User should contact TI. All refunds will be made in full within thirty (30) working days from the return of the components(s), excluding any postage or packaging costs.
10. *Governing Law:* These terms and conditions shall be governed by and interpreted in accordance with the laws of the State of Texas, without reference to conflict-of-laws principles. User agrees that non-exclusive jurisdiction for any dispute arising out of or relating to these terms and conditions lies within courts located in the State of Texas and consents to venue in Dallas County, Texas. Notwithstanding the foregoing, any judgment may be enforced in any United States or foreign court, and TI may seek injunctive relief in any United States or foreign court.

Copyright © 2014, Texas Instruments Incorporated

IMPORTANT NOTICE

Texas Instruments Incorporated and its subsidiaries (TI) reserve the right to make corrections, enhancements, improvements and other changes to its semiconductor products and services per JESD46, latest issue, and to discontinue any product or service per JESD48, latest issue. Buyers should obtain the latest relevant information before placing orders and should verify that such information is current and complete. All semiconductor products (also referred to herein as “components”) are sold subject to TI’s terms and conditions of sale supplied at the time of order acknowledgment.

TI warrants performance of its components to the specifications applicable at the time of sale, in accordance with the warranty in TI’s terms and conditions of sale of semiconductor products. Testing and other quality control techniques are used to the extent TI deems necessary to support this warranty. Except where mandated by applicable law, testing of all parameters of each component is not necessarily performed.

TI assumes no liability for applications assistance or the design of Buyers’ products. Buyers are responsible for their products and applications using TI components. To minimize the risks associated with Buyers’ products and applications, Buyers should provide adequate design and operating safeguards.

TI does not warrant or represent that any license, either express or implied, is granted under any patent right, copyright, mask work right, or other intellectual property right relating to any combination, machine, or process in which TI components or services are used. Information published by TI regarding third-party products or services does not constitute a license to use such products or services or a warranty or endorsement thereof. Use of such information may require a license from a third party under the patents or other intellectual property of the third party, or a license from TI under the patents or other intellectual property of TI.

Reproduction of significant portions of TI information in TI data books or data sheets is permissible only if reproduction is without alteration and is accompanied by all associated warranties, conditions, limitations, and notices. TI is not responsible or liable for such altered documentation. Information of third parties may be subject to additional restrictions.

Resale of TI components or services with statements different from or beyond the parameters stated by TI for that component or service voids all express and any implied warranties for the associated TI component or service and is an unfair and deceptive business practice. TI is not responsible or liable for any such statements.

Buyer acknowledges and agrees that it is solely responsible for compliance with all legal, regulatory and safety-related requirements concerning its products, and any use of TI components in its applications, notwithstanding any applications-related information or support that may be provided by TI. Buyer represents and agrees that it has all the necessary expertise to create and implement safeguards which anticipate dangerous consequences of failures, monitor failures and their consequences, lessen the likelihood of failures that might cause harm and take appropriate remedial actions. Buyer will fully indemnify TI and its representatives against any damages arising out of the use of any TI components in safety-critical applications.

In some cases, TI components may be promoted specifically to facilitate safety-related applications. With such components, TI’s goal is to help enable customers to design and create their own end-product solutions that meet applicable functional safety standards and requirements. Nonetheless, such components are subject to these terms.

No TI components are authorized for use in FDA Class III (or similar life-critical medical equipment) unless authorized officers of the parties have executed a special agreement specifically governing such use.

Only those TI components which TI has specifically designated as military grade or “enhanced plastic” are designed and intended for use in military/aerospace applications or environments. Buyer acknowledges and agrees that any military or aerospace use of TI components which have ***not*** been so designated is solely at the Buyer's risk, and that Buyer is solely responsible for compliance with all legal and regulatory requirements in connection with such use.

TI has specifically designated certain components as meeting ISO/TS16949 requirements, mainly for automotive use. In any case of use of non-designated products, TI will not be responsible for any failure to meet ISO/TS16949.

Products		**Applications**	
Audio	www.ti.com/audio	Automotive and Transportation	www.ti.com/automotive
Amplifiers	amplifier.ti.com	Communications and Telecom	www.ti.com/communications
Data Converters	dataconverter.ti.com	Computers and Peripherals	www.ti.com/computers
DLP® Products	www.dlp.com	Consumer Electronics	www.ti.com/consumer-apps
DSP	dsp.ti.com	Energy and Lighting	www.ti.com/energy
Clocks and Timers	www.ti.com/clocks	Industrial	www.ti.com/industrial
Interface	interface.ti.com	Medical	www.ti.com/medical
Logic	logic.ti.com	Security	www.ti.com/security
Power Mgmt	power.ti.com	Space, Avionics and Defense	www.ti.com/space-avionics-defense
Microcontrollers	microcontroller.ti.com	Video and Imaging	www.ti.com/video
RFID	www.ti-rfid.com		
OMAP Applications Processors	www.ti.com/omap	**TI E2E Community**	e2e.ti.com
Wireless Connectivity	www.ti.com/wirelessconnectivity		

Mailing Address: Texas Instruments, Post Office Box 655303, Dallas, Texas 75265
Copyright © 2014, Texas Instruments Incorporated