TCA9536 Remote 4-Bit I²C and SMBus I/O Expander with Configuration Registers

1 Features

- I²C to GPIO expander
- Operating power-supply voltage range of 1.65 V to 5.5 V
- 5-V Tolerant I/O ports
- Software Reset via I²C General Call
- Software-enabled integrated pull-up resistors on P ports
- P3 can be repurposed as $\overline{\text{INT}}$ output
- 1-MHz Fast mode plus I²C bus
- Input and output configuration register
- Polarity inversion register
- Internal power-on reset
- Power-up with all channels configured as inputs
- Noise filter on SCL and SDA inputs
- Latched outputs with high-current drive maximum capability for directly driving LEDs
- ESD protection exceeds JESD 22
  - 2000-V Human-body model (A114-A)
  - 1000-V Charged-device model (C101)

2 Applications

- Personal electronics
  - Wearables
  - Mobile phones
  - Gaming consoles
- Servers
- Routers

3 Description

The TCA9536 is a 4-bit I/O expander for the I²C bus and is designed for 1.65-V to 5.5-V V_{CC} operation. It provides general-purpose remote I/O expansion for most microcontroller families via the I²C interface.

The system controller can enable the I/Os as either inputs or outputs by writing to the I/O configuration register bits. The data for each input or output is kept in the corresponding input or output register. The polarity of the Input Port register can be inverted with the Polarity Inversion register. There is an additional special function register that can be used to disable the internal pull-up resistors and P3 override to an $\overline{\text{INT}}$ output.

The TCA9536 open-drain interrupt output (when P3 is configured as $\overline{\text{INT}}$ in the special function register) is activated when any input differs from its corresponding Input Port register state and is used to indicate to the system controller that an input state has changed.

The system processor can reset the TCA9536 in the event of a timeout or other improper operation by using an I²C soft reset command, which puts the registers in their default state.

Device Information

PART NUMBER	PACKAGE(1)	BODY SIZE (NOM)
TCA9536	X2SON (8)	1.35 mm × 0.80 mm
	VSSOP (8)	3.00 mm × 3.00 mm

(1) For all available packages, see the orderable addendum at the end of the datasheet.

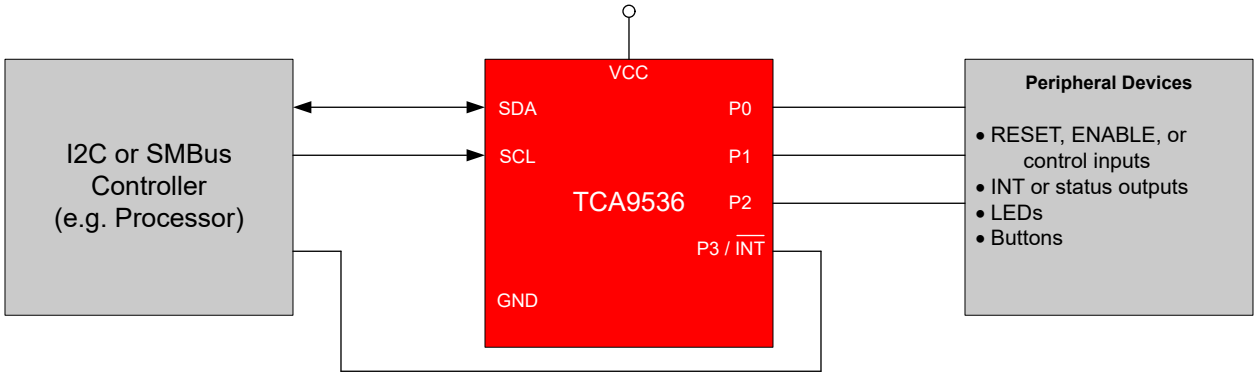

An IMPORTANT NOTICE at the end of this data sheet addresses availability, warranty, changes, use in safety-critical applications, intellectual property matters and other important disclaimers. PRODUCTION DATA.

Table of Contents

1 Features....1
2 Applications....1
3 Description....1
4 Revision History....2
5 Pin Configuration and Functions....3
6 Specifications....4
6.1 Absolute Maximum Ratings....4
6.2 ESD Ratings....4
6.3 Recommended Operating Conditions....4
6.4 Thermal Information....5
6.5 Electrical Characteristics....5
6.6 Timing Requirements....6
6.7 I^2C Bus Timing Requirements....7
6.8 Switching Characteristics....8
6.9 Typical Characteristics....9
7 Parameter Measurement Information....11
8 Detailed Description....13
8.1 Overview....13
8.2 Functional Block Diagram....13
8.3 Feature Description....15
8.4 Device Functional Modes....15
8.5 Programming....15
8.6 Register Maps....19
9 Application Information Disclaimer....21
9.1 Application Information....21
9.2 Typical Application....21
10 Power Supply Recommendations....24
10.1 Power-On Reset....24
11 Layout....26
11.1 Layout Guidelines....26
11.2 Layout Example....26
12 Device and Documentation Support....27
12.1 Documentation Support....27
12.2 Receiving Notification of Documentation Updates....27
12.3 Support Resources....27
12.4 Trademarks....27
12.5 Electrostatic Discharge Caution....27
12.6 Glossary....27
13 Mechanical, Packaging, and Orderable Information....27

4 Revision History

Changes from Revision * (July 2021) to Revision A (December 2021)	Page
• Changed the document from *Advanced Information* to *Production* data	1

Copyright © 2021 Texas Instruments Incorporated

5 Pin Configuration and Functions

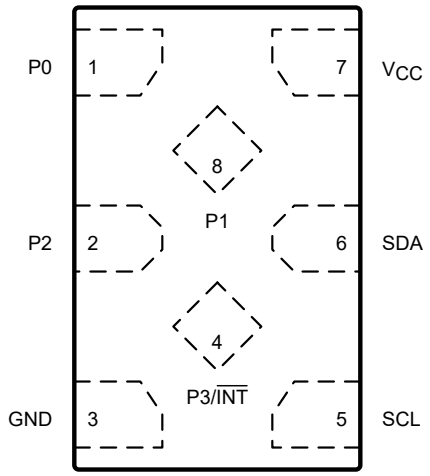

Not to scale

Figure 5-1. DTM Package, 8-Pin X2SON, Top View

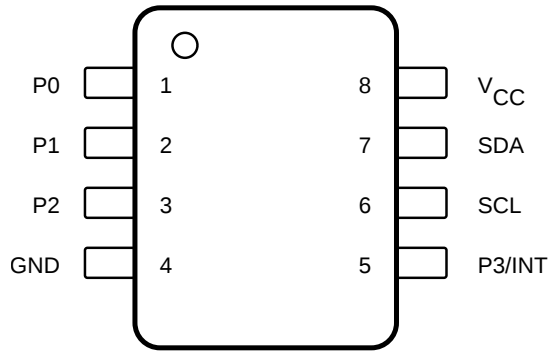

Not to scale

Figure 5-2. DGK Package, 8-Pin VSSOP, Top View

Table 5-1. Pin Functions

PIN			I/O	DESCRIPTION
DGK	DTM	NAME		
1	1	P0	I/O	P-port input-output. Push-pull design structure. Internal pull-up resistor enabled by default.
2	8	P1	I/O	P-port input-output. Push-pull design structure. Internal pull-up resistor enabled by default.
3	2	P2	I/O	P-port input-output. Push-pull design structure. Internal pull-up resistor enabled by default.
4	3	GND	—	Ground
5	4	P3/$\overline{INT}$	I/O	P-port input-output. Push-pull design structure. When configured as $\overline{INT}$, operates as open drain. Internal pull-up resistor enabled by default.
6	5	SCL	I/O	Serial clock bus. Connect to V_{CC} through a pull-up resistor
7	6	SDA	I/O	Serial data bus. Connect to V_{CC} through a pull-up resistor
8	7	V_{CC}	—	Supply voltage

Copyright © 2021 Texas Instruments Incorporated

6 Specifications

6.1 Absolute Maximum Ratings

over operating free-air temperature range (unless otherwise noted)[1]

			MIN	MAX	UNIT
V_{CC}	Supply current		–0.5	6	V
V_I	Input voltage[2]		–0.5	6	V
V_O	Output voltage[2]		–0.5	6	V
I_{IK}	Input clamp current	$V_I < 0$		–20	mA
I_{OK}	Output clamp current	$V_O < 0$		–20	mA
I_{IOK}	Input-output clamp current	$V_O < 0$ or $V_O > V_{CC}$		±20	mA
I_{OL}	Continuous output low current	$V_O = 0$ to V_{CC}		50	mA
I_{OH}	Continuous output high current	$V_O = 0$ to V_{CC}		–50	mA
I_{CC}	Continuous current through GND			–250	mA
	Continuous current through V_{CC}			160	mA
T_J	Junction temperature			150	°C
T_{stg}	Storage temperature		–65	150	°C

(1) Operation outside the *Absolute Maximum Ratings* may cause permanent device damage. Absolute Maximum Ratings do not imply functional operation of the device at these or any other conditions beyond those listed under *Recommended Operating Conditions*. If used outside the *Recommended Operating Conditions* but within the *Absolute Maximum Ratings*, the device may not be fully functional, and this may affect device reliability, functionality, performance, and shorten the device lifetime.
(2) The input negative-voltage and output voltage ratings may be exceeded if the input and output current ratings are observed.

6.2 ESD Ratings

				VALUE	UNIT
$V_{(ESD)}$	Electrostatic discharge	Human body model (HBM), per ANSI/ESDA/JEDEC JS-001[1]	Pins P0-P3, VCC	±4000	V
			Pins SDA, SCL	±2000	
		Charged device model (CDM), per ANSI/ESDA/JEDEC specification JS-002[2]	All pins	±1000	

(1) JEDEC document JEP155 states that 500-V HBM allows safe manufacturing with a standard ESD control process.
(2) JEDEC document JEP157 states that 250-V CDM allows safe manufacturing with a standard ESD control process.

6.3 Recommended Operating Conditions

over operating free-air temperature range (unless otherwise noted)

			MIN	MAX	UNIT
V_{CC}	Supply voltage		1.65	5.5	V
V_I	Input voltage	SCL, SDA	0	5.5	V
		P0-P3[1]	0	5.5	
I_{OH}	High-level output current	P3-P0		–10	mA
I_{OL}	Low-level output current (V_{CC} > 1.8 V)	P3-P0		25	mA
	Low-level output current (V_{CC} ≤ 1.8 V)	P3-P0		15	mA
T_A	Ambient temperature		–40	125	°C
T_J	Junction temperature			125	°C

(1) When the internal pull up resistors are enabled, input voltages above V_{CC} will result in current flowing to VCC from the port.

Copyright © 2021 Texas Instruments Incorporated

6.4 Thermal Information

THERMAL METRIC[1]		TCA9536		UNIT
		DGK (VSSOP)	DTM (X2SON)	
		8-PIN	8-PIN	
$R_{\theta JA}$	Junction-to-ambient thermal resistance	183.7	193.1	°C/W
$R_{\theta JC(top)}$	Junction-to-case (top) thermal resistance	76.9	110.7	°C/W
$R_{\theta JB}$	Junction-to-board thermal resistance	104.9	110.4	°C/W
Ψ_{JT}	Junction-to-top characterization parameter	18.7	5.9	°C/W
Ψ_{JB}	Junction-to-board characterization parameter	103.4	110.3	°C/W

(1) For more information about traditional and new thermal metrics, see the Semiconductor and IC Package Thermal Metrics application report.

6.5 Electrical Characteristics

over operating free-air temperature range (unless otherwise noted)

PARAMETER			TEST CONDITIONS	V_{CC}	MIN	TYP	MAX	UNIT
V_{IK}	Input diode clamp voltage		I_I = -18 mA	1.65 V to 5.5 V	–1.2			V
V_{PORR}	Power-on reset voltage, V_{CC} rising		$V_I = V_{CC}$ or GND, I_O = 0			1.2	1.6	V
V_{PORF}	Power-on reset voltage, V_{CC} falling		$V_I = V_{CC}$ or GND, I_O = 0		0.75	1		V
V_{IH}	High-level input voltage	SDA,SCL		1.65 to 5.5 V	0.7 × V_{CC}			V
V_{IH}	High-level input voltage	P ports		1.65 to 5.5 V	0.7 × V_{CC}			V
V_{IL}	Low-level input voltage	SDA,SCL		1.65 to 5.5 V			0.4 × V_{CC}	V
V_{IL}	Low-level input voltage	P ports		1.65 to 5.5 V			0.3 × V_{CC}	V
V_{OH}	P-port high-level output voltage[1]		I_{OH} = -8 mA	1.65 V	1.2			V
				2.3 V	1.8			
				3 V	2.6			
				4.5 V	4.1			
				4.75 V	4.1			
			I_{OH} = -10 mA	1.65 V	1			
				2.3 V	1.7			
				3 V	2.5			
				4.5 V	4			
				4.75 V	4			
I_{OL}	Low-level output current	SDA	V_{OL} = 0.4 V	1.65 V to 5.5 V	20			mA
		P0-P3	V_{OL} = 0.5 V		8			
			V_{OL} = 0.7 V		10			
I_{OL}	Low-level output current	$\overline{INT}$ [2]	V_{OL} = 0.4 V	1.65 V to 5.5 V	4			mA
I_I	Input leakage current	P ports	$V_I = V_{CC}$	1.65 V to 5.5 V		0	±1	μA
			V_I = 5.5 V (T_A ≤ 105 °C)	0 V		0	±1	
			V_I = 5.5 V	0 V		0	±2	
			V_I = GND, PU Disabled	1.65 V to 5.5 V		0	±1	

6.5 Electrical Characteristics (continued)

over operating free-air temperature range (unless otherwise noted)

PARAMETER			TEST CONDITIONS	V_{CC}	MIN	TYP	MAX	UNIT
I_I	Input leakage current	P ports	V_I = GND, PU Enabled	1.65 V to 5.5 V	-100	-40		µA
I_I	Input leakage current	SCL, SDA input leakage	$V_I = V_{CC}$ or GND	1.65 V to 5.5 V		0	±1	µA
I_{CC}	Quiescent current	Operating mode	$V_I = V_{CC}$ or GND (PU Disabled), I/O = inputs, f_{SCL} = 400 kHz, $t_r = t_f$ = 300 ns	5.5 V		22	40	µA
				3.6 V		11	20	
				2.7 V		8	10	
				1.95 V		5	8	
I_{CC}	Quiescent current	Operating mode	V_I = GND, I/O = inputs, f_{SCL} = 400 kHz, $t_r = t_f$ = 300 ns, PU Enabled	5.5 V		225	390	µA
				3.6 V		175	280	
				2.7 V		125	200	
				1.95 V		100	150	
I_{CC}	Quiescent current	Operating mode	$V_I = V_{CC}$ or GND (PU Disabled), I/O = inputs, f_{SCL} = 1 MHz, $t_r = t_f$ = 120 ns	5.5 V			100	µA
				3.6 V			40	
				2.7 V			25	
				1.95 V			15	
I_{CC}	Quiescent current	Operating mode	V_I = GND, I/O = inputs, f_{SCL} = 1 MHz, $t_r = t_f$ = 120 ns, PU Enabled	5.5 V		225	425	µA
				3.6 V		175	250	
				2.7 V		125	200	
				1.95 V		100	150	
I_{CC}	Quiescent current	Standby mode	$V_I = V_{CC}$, I_O = 0, I/0 = inputs, f_{SCL} = 0 kHz	5.5 V		1.5	3.9	µA
				3.6 V		0.9	2.2	
				2.7 V		0.6	1.8	
				1.95 V		0.6	1.5	
I_{CC}	Quiescent current	Standby mode	V_I = GND, I/0 = inputs, f_{SCL} = 0 kHz, PU Enabled	5.5 V		225	350	µA
				3.6 V		175	250	
				2.7 V		125	200	
				1.95 V		100	150	
C_I	Input pin capacitance	SCL	$V_I = V_{CC}$ or GND	1.65 V to 5.5 V		4	5	pF
C_{IO}	Input-output pin capacitance	SDA	$V_{IO} = V_{CC}$ or GND	1.65 V to 5.5 V		7	10	pF
		P port	$V_{IO} = V_{CC}$ or GND	1.65 V to 5.5 V		7	10	

(1) Each I/O must be externally limited to a maximum of 25 mA
(2) P3 can be repurposed as $\overline{INT}$ (open-drain interrupt output) in the special function register

6.6 Timing Requirements

over operating free-air temperature range (unless otherwise noted)

		MIN	MAX	UNIT
Device				
t_{READY}	Power on to start condition time	10		µs

Copyright © 2021 Texas Instruments Incorporated

6.7 I²C Bus Timing Requirements

over operating free-air temperature range (unless otherwise noted)

			MIN	MAX	UNIT
I²C Bus - Standard Mode					
f_{scl}	I²C clock frequency		0	100	kHz
t_{sch}	I²C clock high time		4		µs
t_{scl}	I²C clock low time		4.7		µs
t_{sp}	I²C spike time			50	ns
t_{sds}	I²C serial-data setup time		250		ns
t_{sdh}	I²C serial-data hold time		0		ns
t_{icr}	I²C input rise time			1000	ns
t_{icf}	I²C input fall time			300	ns
t_{ocf}	I²C output fall time	10-pF to 400-pF bus		300	ns
t_{buf}	I²C bus free time between stop and start		4.7		µs
t_{sts}	I²C start or repeated start condition setup		4.7		µs
t_{sth}	I²C start or repeated start condition hold		4		µs
t_{sps}	I²C stop condition setup		4		µs
$t_{vd(data)}$	Valid data time	SCL low to SDA output valid		3.45	µs
$t_{vd(ack)}$	Valid data time of ACK condition	ACK signal from SCL low to SDA (out) low		3.45	µs
C_b	I²C bus capacitive load			400	pF
I²C Bus - Fast Mode					
f_{scl}	I²C clock frequency		0	400	kHz
t_{sch}	I²C clock high time		0.6		µs
t_{scl}	I²C clock low time		1.3		µs
t_{sp}	I²C spike time			50	ns
t_{sds}	I²C serial-data setup time		100		ns
t_{sdh}	I²C serial-data hold time		0		ns
t_{icr}	I²C input rise time		20	300	ns
t_{icf}	I²C input fall time		20 × (V_{CC} / 5.5 V)	300	ns
t_{ocf}	I²C output fall time	10-pF to 400-pF bus	20 × (V_{CC} / 5.5 V)	300	ns
t_{buf}	I²C bus free time between stop and start		1.3		µs
t_{sts}	I²C start or repeated start condition setup		0.6		µs
t_{sth}	I²C start or repeated start condition hold		0.6		µs
t_{sps}	I²C stop condition setup		0.6		µs
$t_{vd(data)}$	Valid data time	SCL low to SDA output valid		0.9	µs
$t_{vd(ack)}$	Valid data time of ACK condition	ACK signal from SCL low to SDA (out) low		0.9	µs
C_b	I²C bus capacitive load			400	pF
I²C Bus - Fast Mode Plus					
f_{scl}	I²C clock frequency		0	1000	kHz
t_{sch}	I²C clock high time		0.26		µs
t_{scl}	I²C clock low time		0.5		µs

Copyright © 2021 Texas Instruments Incorporated

6.7 I²C Bus Timing Requirements (continued)

over operating free-air temperature range (unless otherwise noted)

			MIN	MAX	UNIT
t_{sp}	I²C spike time			50	ns
t_{sds}	I²C serial-data setup time		50		ns
t_{sdh}	I²C serial-data hold time		0		ns
t_{icr}	I²C input rise time			120	ns
t_{icf}	I²C input fall time		20 × (V_{CC} / 5.5 V)	120	ns
t_{ocf}	I²C output fall time	10-pF to 550-pF bus	20 × (V_{CC} / 5.5 V)	120	ns
t_{buf}	I²C bus free time between stop and start		0.5		µs
t_{sts}	I²C start or repeated start condition setup		0.26		µs
t_{sth}	I²C start or repeated start condition hold		0.26		µs
t_{sps}	I²C stop condition setup		0.26		µs
$t_{vd(data)}$	Valid data time	SCL low to SDA output valid		0.45	µs
$t_{vd(ack)}$	Valid data time of ACK condition	ACK signal from SCL low to SDA (out) low		0.45	µs
C_b	I²C bus capactive load			550	pF

6.8 Switching Characteristics

over operating free-air temperature range (unless otherwise noted)

PARAMETER		FROM (INPUT)	TO (OUTPUT)	MIN	TYP	MAX	UNIT
t_{iv}	Interrupt valid time	P port	$\overline{INT}$			4	µs
t_{ir}	Interrupt reset delay time	SCL	$\overline{INT}$			4	µs
t_{pv}	Output data valid; For $V_{CC} \geq 2.3$ V	SCL	P port			200	ns
	Output data valid; For $V_{CC} < 2.3$ V					400	ns
t_{ps}	Input data setup time	P port	SCL	100			ns
t_{ph}	Input data hold time	P port	SCL	300			ns

Copyright © 2021 Texas Instruments Incorporated

6.9 Typical Characteristics

T_A = 25°C (unless otherwise noted)

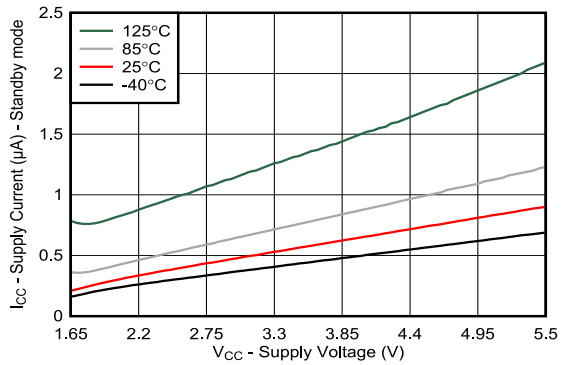

Figure 6-1. Supply Current (Standby) vs Supply Voltage for Different Temperature (T_A)

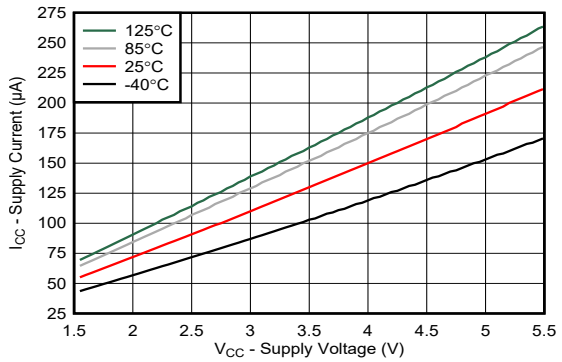

Figure 6-2. Supply Current vs Supply Voltage for Different Temperature (T_A)

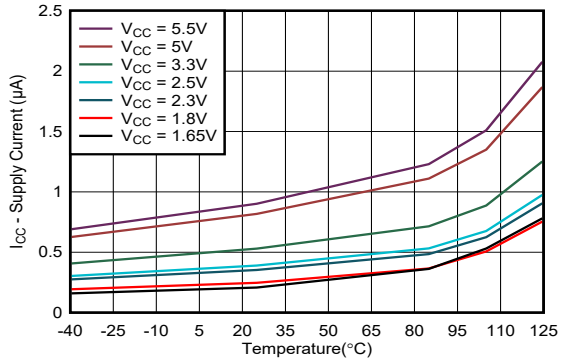

Figure 6-3. Standby Supply Current vs Temperature for Different Supply Voltage (V_{CC})

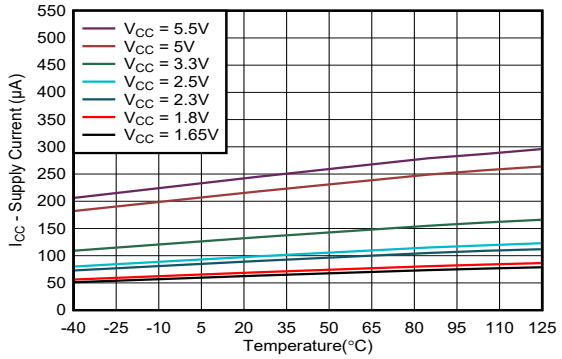

Figure 6-4. Supply Current vs Temperature for Different Supply Voltage (V_{CC})

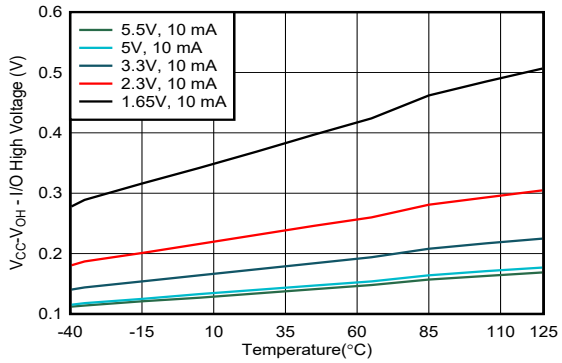

Figure 6-5. V_{CC} – V_{OH} Voltage vs Temperature for Different V_{CC}

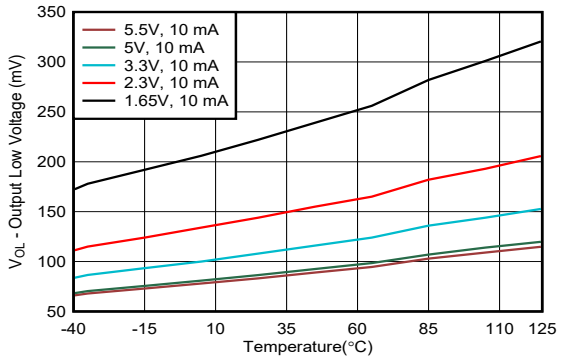

Figure 6-6. V_{OL} vs Temperature for Different V_{CC}

6.9 Typical Characteristics (continued)

T_A = 25°C (unless otherwise noted)

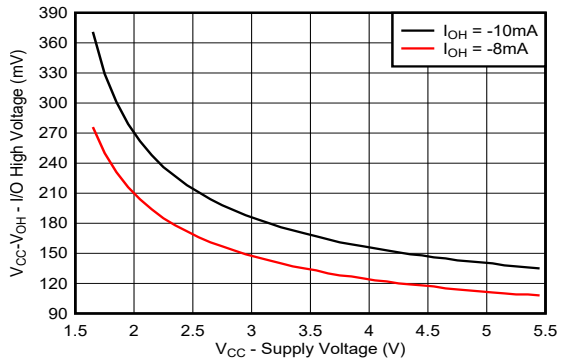

Figure 6-7. V_{CC} – V_{OH} Voltage at 25°C for Different V_{CC}

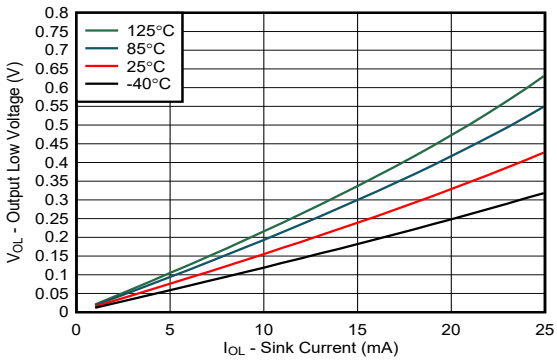

Figure 6-8. I/O Sink Current vs Output Low Voltage for Different Temperature (T_A) for V_{CC} = 2.3 V

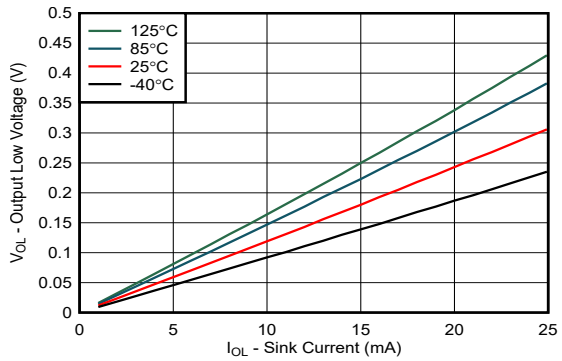

Figure 6-9. I/O Sink Current vs Output Low Voltage for Different Temperature (T_A) for V_{CC} = 3.3 V

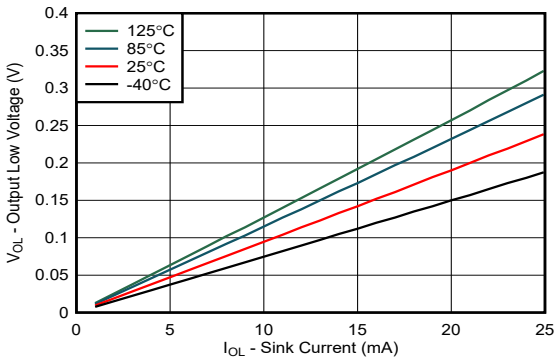

Figure 6-10. I/O Sink Current vs Output Low Voltage for Different Temperature (T_A) for V_{CC} = 5.5 V

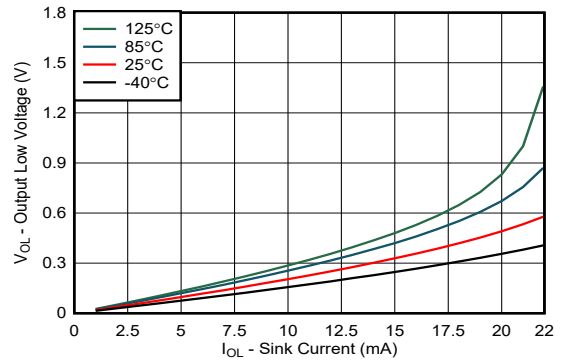

Figure 6-11. I/O Source Current vs Output High Voltage for Different Temperature (T_A) for V_{CC} = 1.8 V

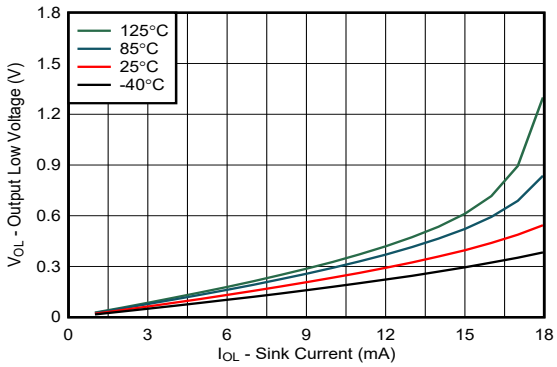

Figure 6-12. I/O Source Current vs Output High Voltage for Different Temperature (T_A) for V_{CC} = 1.65 V

Copyright © 2021 Texas Instruments Incorporated

7 Parameter Measurement Information

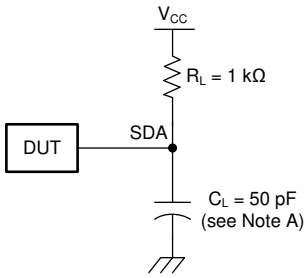

SDA LOAD CONFIGURATION

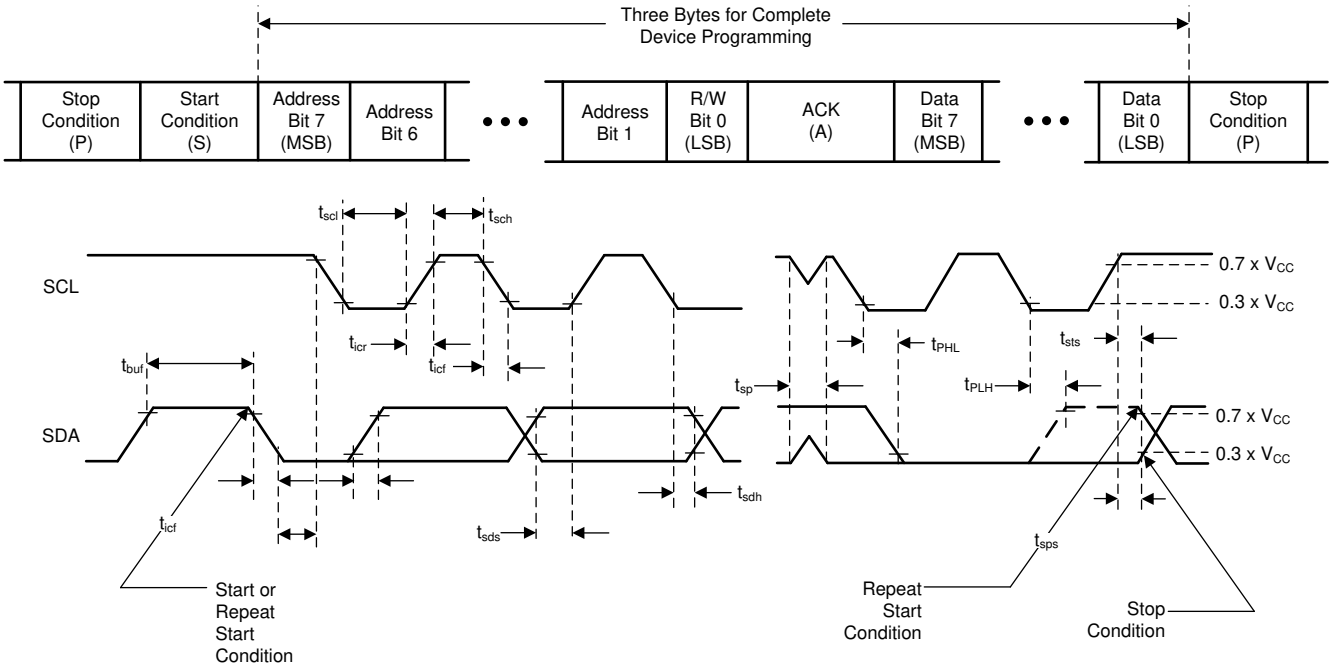

VOLTAGE WAVEFORMS

A. C_L include probe and jig capacitance.
B. All inputs are supplied by generators having the following characteristics: PRR ≤ 10 MHz, Z_O = 50 Ω, t_r/t_f ≤ 30 ns.
C. All parameters and waveforms are not applicable to all devices.

Figure 7-1. I²C Interface Load Circuit and Voltage Waveforms

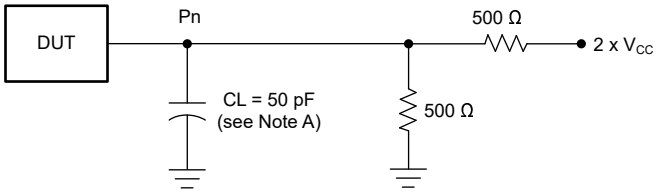

P-PORT LOAD CONFIGURATION

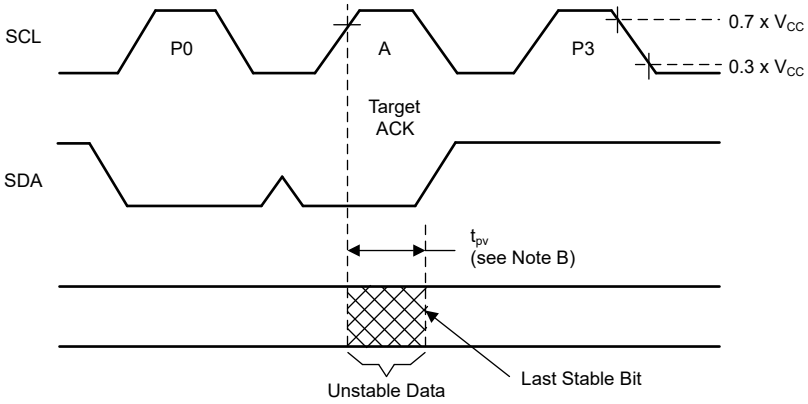

WRITE MODE (R/W = 0)

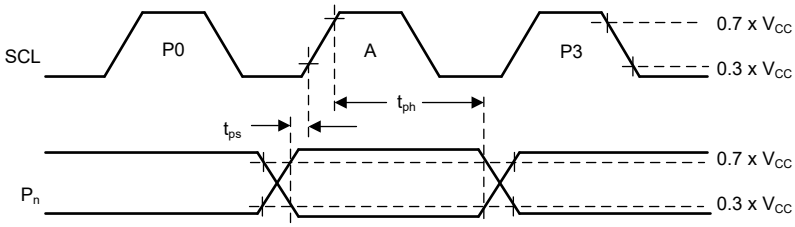

READ MODE (R/W = 1)

A. C_L include probe and jig capacitance.
B. t_{pv} is measured from 0.7 × V_{CC} on SCL to 50% I/O (Pn) output.
C. All inputs are supplied by generators having the following characteristics: PRR ≤ 10 MHz, Z_O = 50 Ω, t_r/t_f ≤ 30 ns.
D. The outputs are measured one at a time, with one transition per measurement.
E. All parameters and waveforms are not applicable to all devices.

Figure 7-2. P-Port Load Circuit and Voltage Waveforms

Copyright © 2021 Texas Instruments Incorporated

8 Detailed Description

8.1 Overview

The TCA9536 device is a 4-bit I/O expander for the I^2C bus and is designed for 1.65-V to 5.5-V V_{CC} operation. It provides general-purpose remote I/O expansion for most microcontroller families via the I^2C interface.

The TCA9536 consists of a configuration (input or output selection), Input Port, Output Port, and Polarity Inversion (active-high or active-low operation), and special function registers. At power-on, the I/Os are configured as inputs with a weak pull-up to V_{CC}. The system controller can enable the I/Os as either inputs or outputs by writing to the I/O configuration register bits. The data for each input or output is kept in the corresponding Input or output register. The polarity of the Input Port register can be inverted with the Polarity Inversion register. There is an additional special function register that can be used to disable the internal pull-up resistors and P3 override to an $\overline{INT}$ output. All registers can be read by the system controller.

The TCA9536 open-drain interrupt output (when P3 is configured as $\overline{INT}$ in the special function register) is activated when any input differs from its corresponding Input Port register state and is used to indicate to the system controller that an input state has changed.

The system processor can reset the TCA9536 in the event of a timeout or other improper operation by using an I^2C soft reset command, which puts the registers in their default state.

The device outputs (latched) have high-current drive capability for directly driving LEDs.

8.2 Functional Block Diagram

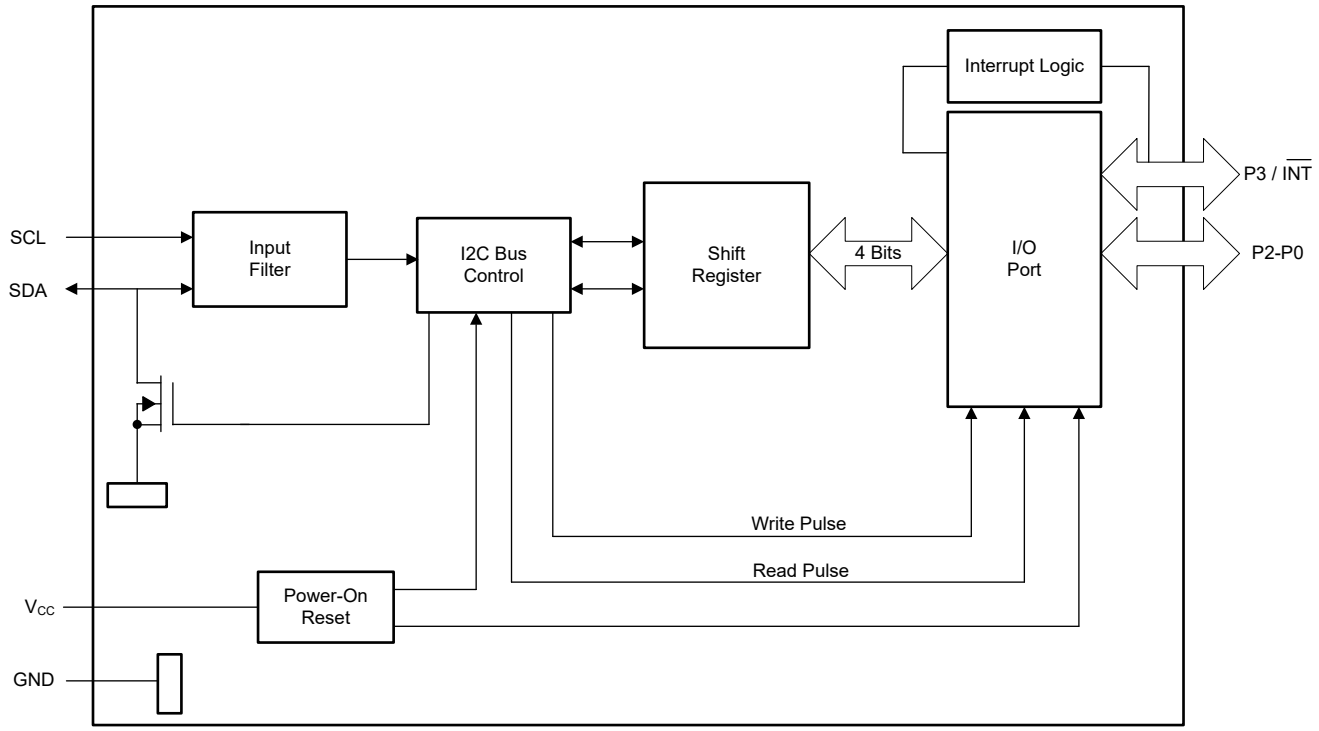

Figure 8-1. Logic Diagram

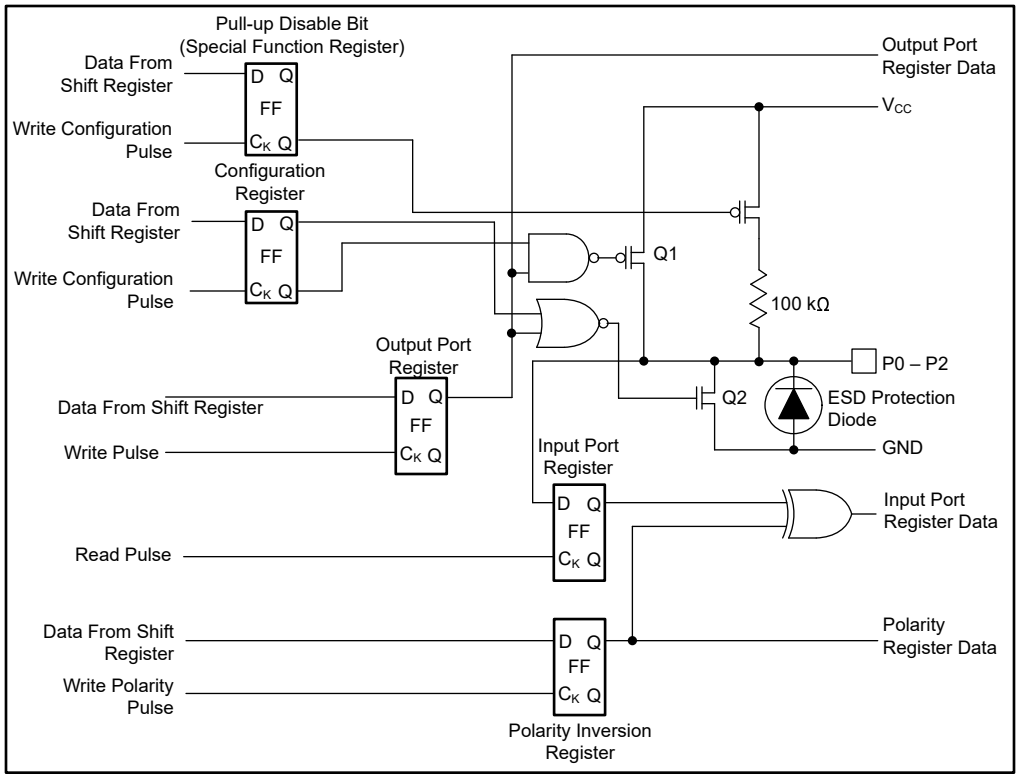

Figure 8-2. Simplified Schematic Of P0 To P2

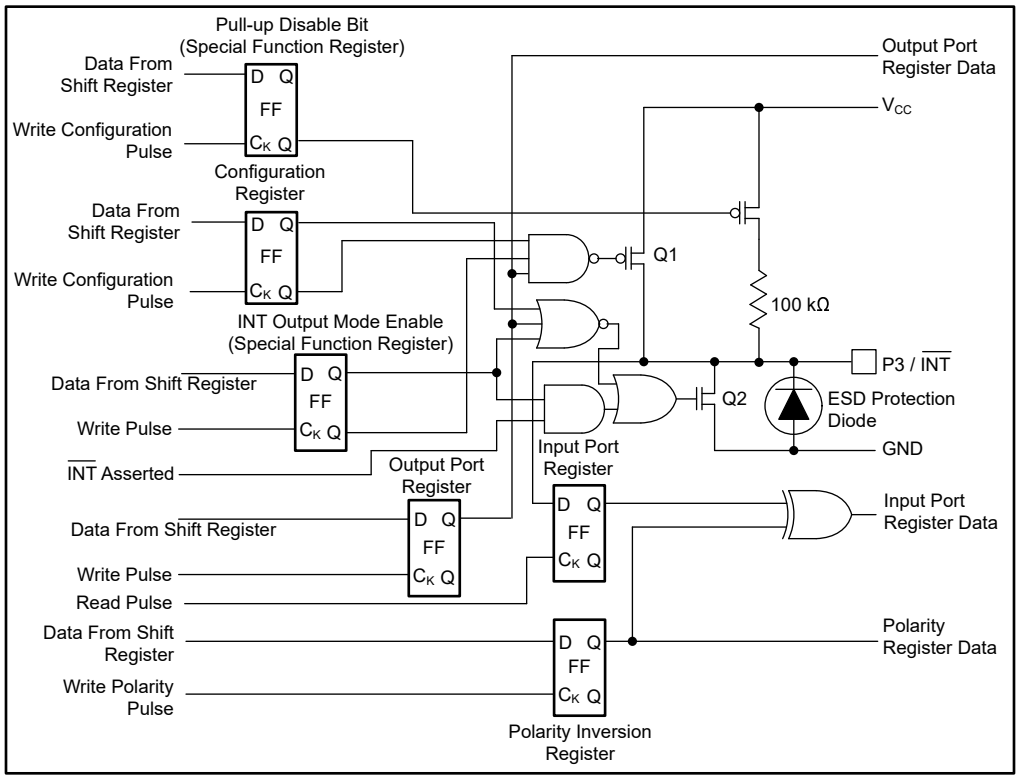

Figure 8-3. Simplified Schematic Of P3 / $\overline{\text{INT}}$

Copyright © 2021 Texas Instruments Incorporated

8.3 Feature Description

8.3.1 I/O Port

When an I/O is configured as an input, FETs Q1 and Q2 are off, creating a high-impedance input with a weak pull-up (100 kΩ typical with roughly 20% tolerance) to V_{CC}. This internal weak pull-up can be disabled via the special function register if desired. The input voltage may be raised above V_{CC} to a maximum of 5.5 V.

If the I/O is configured as an output, Q1 or Q2 is enabled, depending on the state of the output port register. In this case, there are low-impedance paths between the I/O pin and either V_{CC} or GND. The external voltage applied to this I/O pin should not exceed the recommended levels for proper operation.

8.3.2 P3 or Interrupt ($\overline{INT}$) Output

The TCA9536 has a combination P3 and $\overline{INT}$ output pin. The function of the pin is selected by the special function register. When the pin is configured as an $\overline{INT}$ output, the internal-pull up resistor is enabled by default, but will depend on the state of the PU Disable bit in the special function register. See Table 8-7 for more information. The below text describes the functionality of the pin when configured as an $\overline{INT}$ output.

An interrupt is generated by any rising or falling edge of the port inputs in the input mode. After time t_{iv}, the signal $\overline{INT}$ is valid. Resetting the interrupt circuit is achieved when data on the port is changed to the original setting or data is read from the port that generated the interrupt. Resetting occurs in the read mode at the acknowledge (ACK) bit after the rising edge of the SCL signal. Note that the $\overline{INT}$ is reset at the ACK just before the byte of changed data is sent. Interrupts that occur during the ACK clock pulse can be lost (or be very short) because of the resetting of the interrupt during this pulse. Each change of the I/Os after resetting is detected and is transmitted as $\overline{INT}$.

Reading from or writing to another device does not affect the interrupt circuit, and a pin configured as an output cannot cause an interrupt. Changing an I/O from an output to an input may cause a false interrupt to occur if the state of the pin does not match the contents of the Input Port register.

$\overline{INT}$ has an open-drain structure and requires a pull-up resistor to V_{CC} of moderate value (typically about 10 kΩ).

8.3.3 Pull-up Disable Functionality

The TCA9536 has internal 100 kΩ resistors pulled up to V_{CC} by default. The special function register contains a bit which will disable the pull-up resistors on all P-ports. See Table 8-7 for more information. If the P3 port has been configured as an interrut output, the pull-up resistor will depend on the disable bit, the same as any other P-port.

8.4 Device Functional Modes

8.4.1 Power-On Reset

When power (from 0 V) is applied to V_{CC}, an internal power-on reset holds the device in a reset condition until V_{CC} has reached V_{POR}. At that time, the reset condition is released and the TCA9536 registers and I^2C/SMBus state machine initialize to their default states. See Section 10.1 for more details.

8.4.2 Powered-Up

When power has been applied to V_{CC} above V_{PORR}, and the POR has taken place, the device is in a functioning mode. In this state, the device is ready to accept any incoming I^2C requests and is monitoring for changes on the input ports.

8.5 Programming

8.5.1 I^2C Interface

The TCA9536 has a standard bidirectional I^2C interface that is controlled by a controller device in order to be configured or read the status of this device. Each target on the I^2C bus has a specific device address to differentiate between other target devices that are on the same I^2C bus. Many target devices require configuration upon startup to set the behavior of the device. This is typically done when the controller accesses internal register maps of the target, which have unique register addresses. A device can have one or multiple

registers where data is stored, written, or read. For more information see *Understanding the I²C Bus* application report, SLVA704.

The physical I²C interface consists of the serial clock (SCL) and serial data (SDA) lines. Both SDA and SCL lines must be connected to V_{CC} through a pull-up resistor. The size of the pull-up resistor is determined by the amount of capacitance on the I²C lines. For further details, see *I²C Pull-up Resistor Calculation* application report, SLVA689. Data transfer may be initiated only when the bus is idle. A bus is considered idle if both SDA and SCL lines are high after a STOP condition. See *Interface Definition*.

Figure 8-4 and Figure 8-5 show the general procedure for a controller to access a target device:

1. If a controller wants to send data to a target:
   - Controller-transmitter sends a START condition and addresses the target-receiver.
   - Controller-transmitter sends data to target-receiver.
   - Controller-transmitter terminates the transfer with a STOP condition.
2. If a controller wants to receive or read data from a target:
   - Controller-receiver sends a START condition and addresses the target-transmitter.
   - Controller-receiver sends the requested register to read to target-transmitter.
   - Controller-receiver receives data from the target-transmitter.
   - Controller-receiver terminates the transfer with a STOP condition.

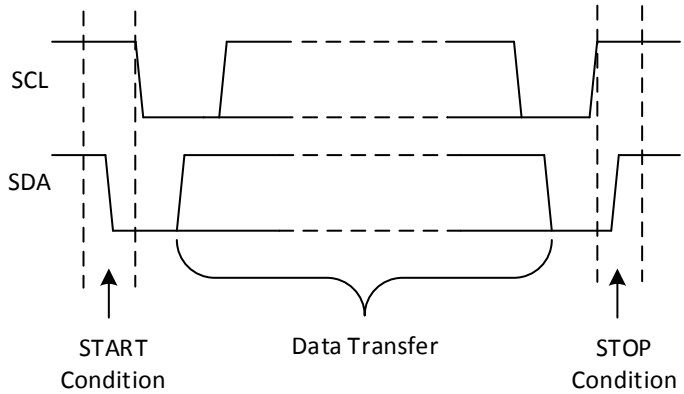

Figure 8-4. Definition of Start and Stop Conditions

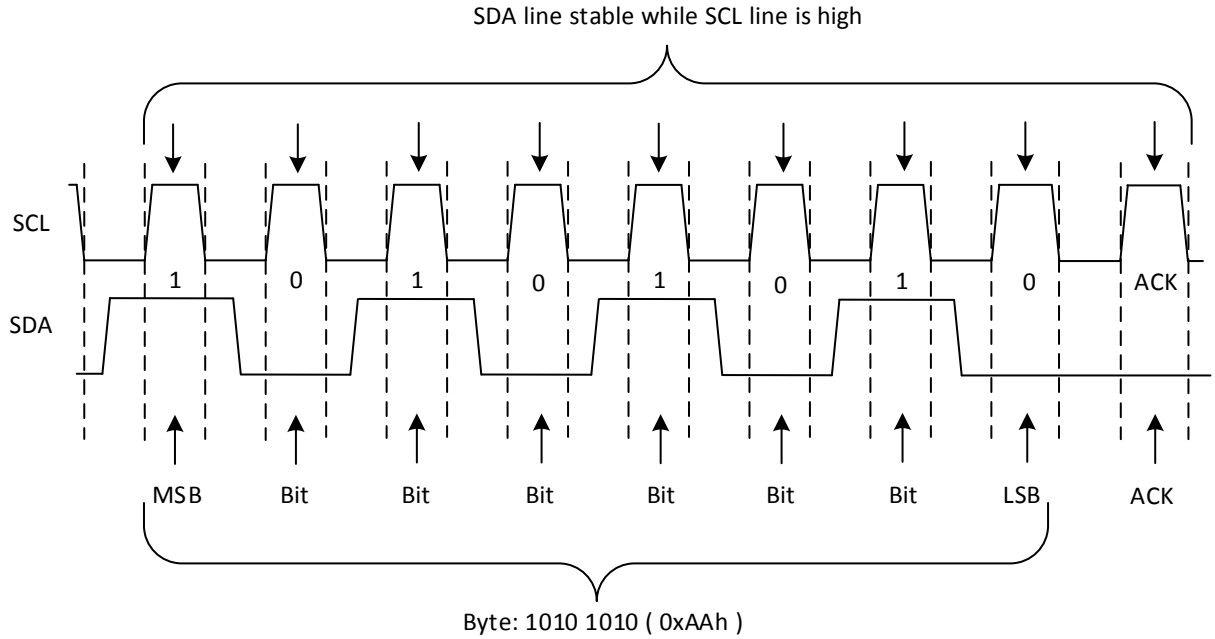

Figure 8-5. Bit Transfer

Copyright © 2021 Texas Instruments Incorporated

8.5.1.1 Writes

To write on the I²C bus, the controller sends a START condition on the bus with the address of the target, as well as the last bit (the R/ $\overline{W}$ bit) set to 0, which signifies a write. After the target sends the acknowledge bit, the controller then sends the register address of the register to which it wishes to write. The target acknowledges again, letting the controller know it is ready. After this, the controller starts sending the register data to the target until the controller has sent all the data necessary (which is sometimes only a single byte), and the controller terminates the transmission with a STOP condition.

See the *Control Register and Command Byte* section to see list of the TCA9536 internal registers and a description of each one.

Figure 8-6 shows an example of writing a single byte to a target register.

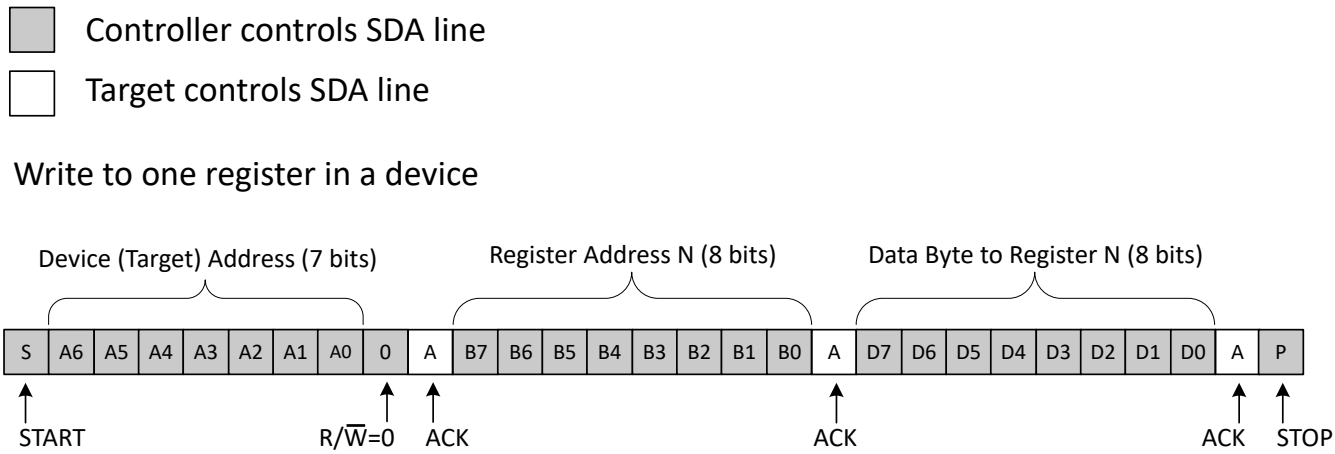

Figure 8-6. Write to Register

Figure 8-7 shows the Write to Output Port Registers.

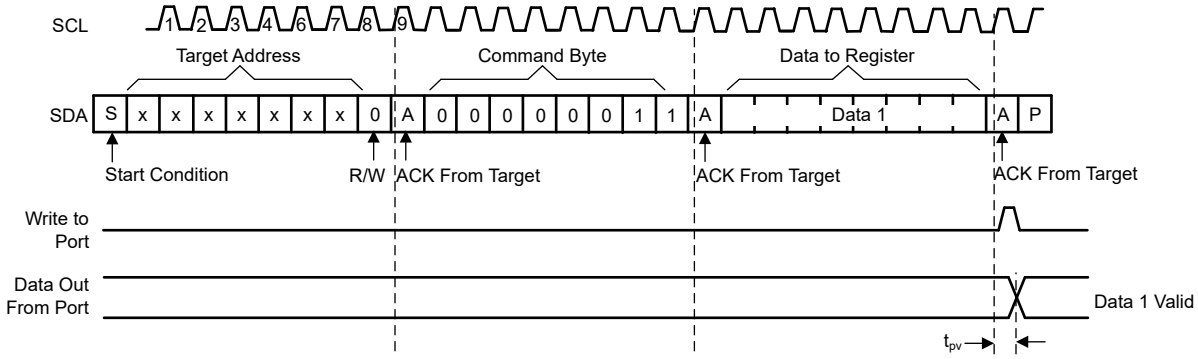

Figure 8-7. Write to Output Port Register

8.5.1.2 Reads

The bus controller first must send the TCA9536 address with the LSB set to a logic 0 (see Table 8-1 for device address). The command byte is sent after the address and determines which register is accessed. After a restart, the device address is sent again but, this time, the LSB is set to a logic 1. Data from the register defined by the command byte then is sent by the TCA9536 (see Figure 8-9). The command byte does not increment automatically. If multiple bytes are read, data from the specified command byte/register is going to be continuously read.

Figure 8-8 shows an example of reading a single byte from a target register.

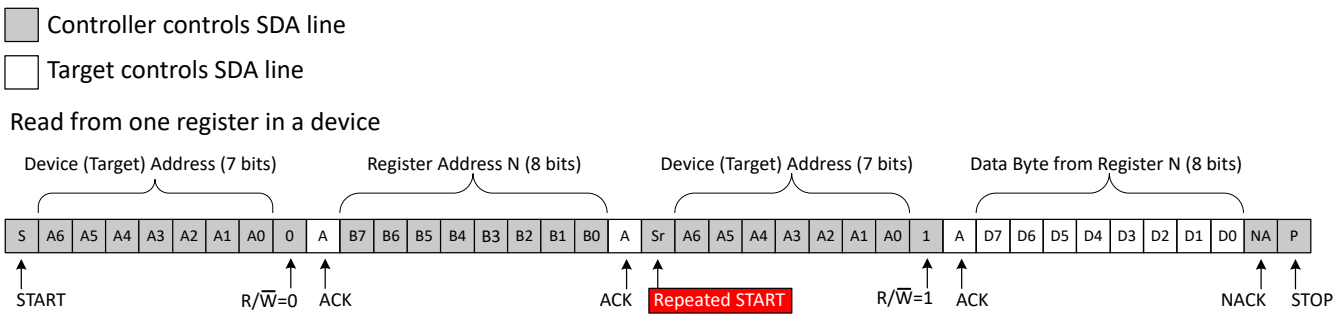

Figure 8-8. Read from Register

After a restart, the value of the register defined by the command byte matches the register being accessed when the restart occurred. Data is clocked into the register on the rising edge of the ACK clock pulse. After the first byte, additional bytes may be read, but the same register specified by the command byte is read.

Data is clocked into the register on the rising edge of the ACK clock pulse. There is no limitation on the number of data bytes received in one read transmission, but when the final byte is received, the bus controller must not acknowledge the data.

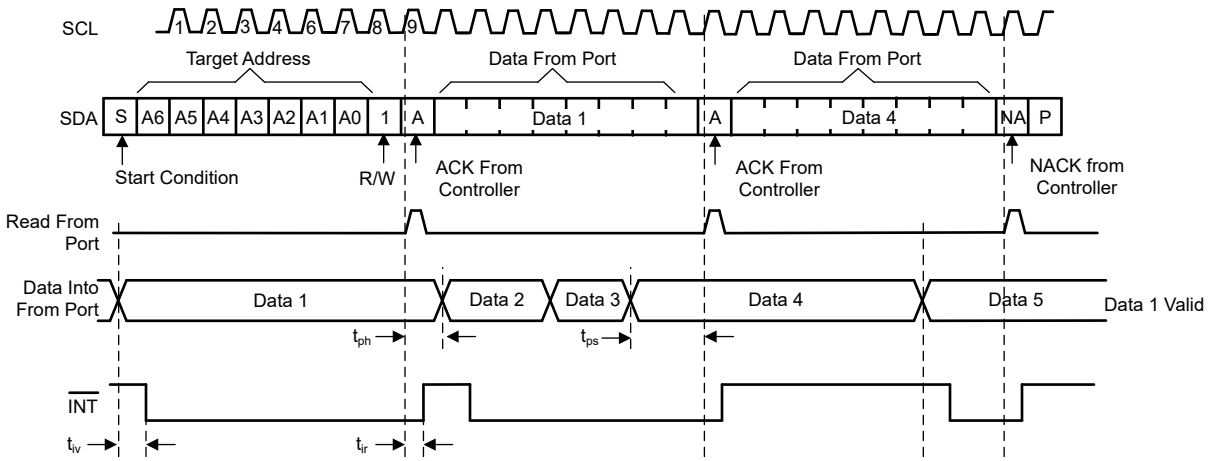

A. Transfer of data can be stopped at any time by a Stop condition. When this occurs, data present at the latest acknowledge phase is valid (output mode). It is assumed that the command byte previously has been set to 00 (Read Input Port register).

B. This figure eliminates the command byte transfer, a restart, and target address call between the initial target address call and actual data transfer from the P port (see Figure 8-8 for these details).

Figure 8-9. Read Input Port Register

8.5.2 Software Reset Call

The Software Reset call is a command send from the controller on the I²C bus that instructs all devices that support the command to be reset to power-up values. In order for it to function as expected, the I²C bus must be functional and no devices can be hanging the bus.

The Software Reset Call is defined as the following steps:

1. A START condition is sent by the I²C bus controller.
2. The address used is the reserved General Call I²C bus address '0000 000' with the R/$\overline{W}$ bit set to 0. The byte sent is 0x00.
3. Any devices supporting the General Call functionality will ACK. If the R/$\overline{W}$ bit is set to 1 (read), the device will NACK.
4. Once the General Call address is acknowledged, the controller sends only 1 byte of data equal to 0x06. If the data byte is any other value, the device will NOT acknowledge or reset. If more than 1 byte is sent, no more bytes will be acknlowedged, and the device will ignore this I2C message, considering it invalid.

Copyright © 2021 Texas Instruments Incorporated

5. After the 1 byte of data (0x06) is sent, the controller sends a STOP condition to end the Software Reset sequence. A repeated START condition will be ignored by the device, and no reset is performed.

Once the above steps are completed successfully, the device will perform a reset. This will clear all register values back to power-on defaults. All P-ports will be configured as inputs, regardless of the port mode configuration of the P3 port.

8.6 Register Maps

8.6.1 Device Address

Table 8-1 shows the fixed 7-bit address of the device. Note that I^2C uses a 7-bit address with a 1-bit READ/$\overline{\text{WRITE}}$ bit for the LSB.

Table 8-1. Device Address

Device	A6	A5	A4	A3	A2	A1	A0	Hex	Decimal
TCA9536	1	0	0	0	0	0	1	0x41	65
TCA9536A	1	0	0	0	0	0	0	0x40	64
TCA9536B	1	0	0	0	0	1	1	0x43	67
TCA9536C	1	0	0	0	0	1	0	0x42	66

The last bit of the 8-bit address byte defines the operation (read or write) to be performed. When it is high (1), a read is selected, while a low (0) selects a write operation.

8.6.2 Control Register and Command Byte

Following the successful acknowledgment of the address byte, the bus controller sends a command byte that is stored in the control register in the TCA9536. This data byte state the operation (read or write) and the internal register (Input, Output, Polarity Inversion, Configuration, or Special Function) that will be affected. This register can be written or read through the I^2C bus. The command byte is sent only during a write transmission.

Once a command byte has been sent, the register that was addressed continues to be accessed by reads until a new command byte has been sent.

Table 8-2. Command Byte

COMMAND BYTE (HEX)	REGISTER	PROTOCOL	POWER-UP DEFAULT
0x00	Input Port	Read byte	1111 XXXX
0x01	Output Port	Read/write byte	1111 1111
0x02	Polarity Inversion	Read/write byte	0000 0000
0x03	Configuration	Read/write byte	1111 1111
0x50	Special Function	Read/write byte	0000 0000

8.6.3 Register Descriptions

The Input Port register (register 0) reflects the incoming logic levels of the pins, regardless of whether the pin is defined as an input or an output by the Configuration register. It only acts on read operation. Writes to these registers have no effect. The default value, X, is determined by the externally applied logic level. See Table 8-3.

Before a read operation, a write transmission is sent with the command byte to instruct the I^2C device that the Input Port register will be accessed next.

Table 8-3. Register 0 (Input Port Register)

BIT	I7	I6	I5	I4	I3	I2	I1	I0
	Not Used							
DEFAULT	1	1	1	1	X	X	X	X

The Output Port register (register 1) shows the outgoing logic levels of the pins defined as outputs by the Configuration register. Bit values in this register have no effect on pins defined as inputs. In turn, reads from this register reflect the value that is in the flip-flop controlling the output selection, not the actual pin value. See Table 8-4.

Table 8-4. Register 0x01 (Output Port Register)

BIT	O7	O6	O5	O4	O3	O2	O1	O0
	Not Used							
DEFAULT	1	1	1	1	1	1	1	1

The Polarity Inversion register (register 2) allows polarity inversion of pins defined as inputs by the Configuration register. If a bit in this register is set (written with 1), the corresponding port pin's polarity is inverted. If a bit in this register is cleared (written with a 0), the corresponding port pin's original polarity is retained. See Table 8-5.

Table 8-5. Register 0x02 (Polarity Inversion Register)

BIT	N7	N6	N5	N4	N3	N2	N1	N0
	Not Used							
DEFAULT	0	0	0	0	0	0	0	0

The Configuration register (register 3) configures the directions of the I/O pins. If a bit in this register is set to 1, the corresponding port pin is enabled as an input with high-impedance output driver. If a bit in this register is cleared to 0, the corresponding port pin is enabled as an output. See Table 8-6.

Table 8-6. Register 0x03 (Configuration Register)

BIT	C7	C6	C5	C4	C3	C2	C1	C0
	Not Used							
DEFAULT	1	1	1	1	1	1	1	1

The Special Function register (register 0x50) configures the directions of the I/O pins. If P3 as $\overline{INT}$ is set to 1, the function of P3 will change to an $\overline{INT}$ output. If PU Disabled is set to 1, all the internal pull-up resistors on the P ports are disabled, this includes the P3 port if it's configured as an $\overline{INT}$ output. See Table 8-6.

Table 8-7. Register 0x50 (Special Function Register)

BIT	S7	S6	S5	S4	S3	S2	S1	S0
	P3 as $\overline{INT}$	PU Disabled	Not Used					
DEFAULT	0	0	0	0	0	0	0	0

Copyright © 2021 Texas Instruments Incorporated

9 Application Information Disclaimer

Note

Information in the following applications sections is not part of the TI component specification, and TI does not warrant its accuracy or completeness. TI's customers are responsible for determining suitability of components for their purposes, as well as validating and testing their design implementation to confirm system functionality.

9.1 Application Information

9.2 Typical Application

This section discusses a typical application in which the device is used to both handle an interrupt input, and output several control signals.

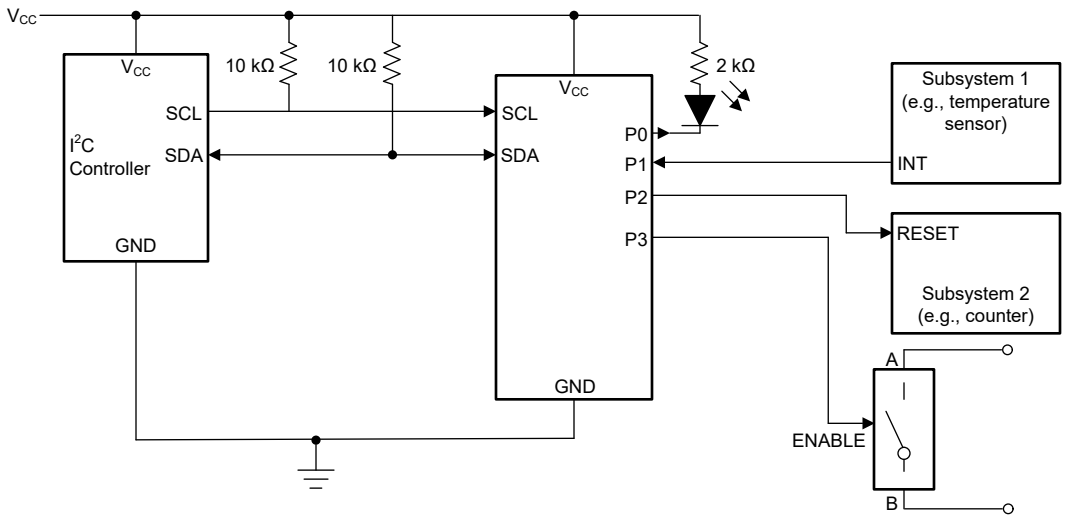

A. P0, P2, and P3 are configured as outputs.
B. P1 is configured as an input.

Note

P3 is configured as GPIO, not an interrupt output.

Figure 9-1. Typical Application

9.2.1 Design Requirements

9.2.1.1 Minimizing I_{CC} When I/Os Control LEDs

When the I/Os are used to control LEDs, they are normally connected to V_{CC} through a resistor as shown in Section 9.2. The LED acts as a diode so, when the LED is off, the I/O V_{IN} is about 1.2 V less than V_{CC}. The supply current, I_{CC}, increases as V_{IN} becomes lower than V_{CC}.

Designs needing to minimize current consumption, such as battery power applications, should consider maintaining the I/O pins greater than or equal to V_{CC} when the LED is off. Figure 9-2 shows a high-value resistor in parallel with the LED. Figure 9-3 shows V_{CC} less than the LED supply voltage by at least 1.2 V. Both of these methods maintain the I/O V_{IN} at or above V_{CC} and prevent additional supply-current consumption when the LED is off.

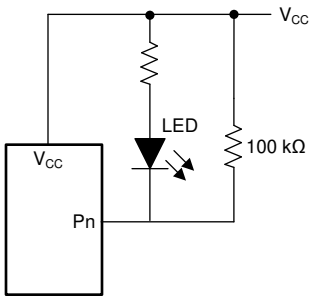

Figure 9-2. High-Value Resistor in Parallel with the LED

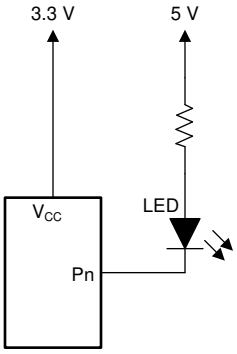

Figure 9-3. Device Supplied by a Lower Voltage

9.2.2 Detailed Design Procedure

The pull-up resistors, R_P, for the SCL and SDA lines need to be selected appropriately and take into consideration the total capacitance of all slaves on the I^2C bus. The minimum pull-up resistance is a function of V_{CC}, $V_{OL,(max)}$, and I_{OL} as shown in Equation 1:

$$R_{p(min)} = \frac{V_{CC} - V_{OL(max)}}{I_{OL}} \tag{1}$$

The maximum pull-up resistance is a function of the maximum rise time, t_r (300 ns for fast-mode operation, f_{SCL} = 400 kHz) and bus capacitance, C_b as shown in Equation 2:

$$R_{p(max)} = \frac{t_r}{0.8473 \times C_b} \tag{2}$$

The maximum bus capacitance for an I^2C bus must not exceed 400 pF for standard-mode or fast-mode operation. The bus capacitance can be approximated by adding the capacitance of the TCA9536, C_i for SCL or C_{io} for SDA, the capacitance of wires/connections/traces, and the capacitance of additional slaves on the bus.

Copyright © 2021 Texas Instruments Incorporated

9.2.3 Application Curves

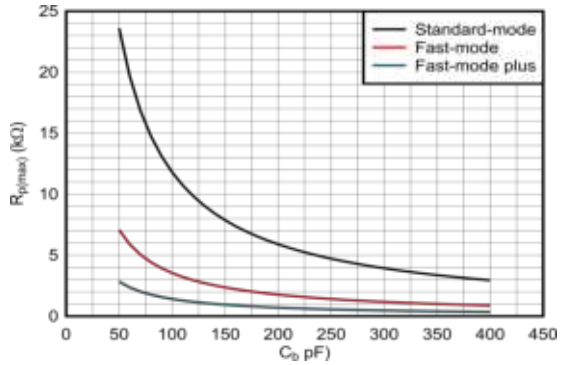

Standard mode (f_{SCL} = 100 kHz, t_r = 1 µs)
Fast mode (f_{SCL} = 400 kHz, t_r = 300 ns)
Fast mode plus (f_{SCL} = 1000 kHz, t_r = 120 ns)

Figure 9-4. Maximum Pullup Resistance ($R_{p(max)}$) vs Bus Capacitance (C_b)

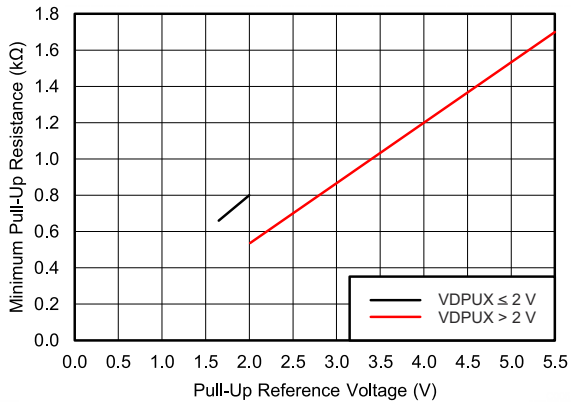

V_{OL} = 0.2 x V_{DPUX} , I_{OL} = 2 mA when V_{DPUX} ≤ 2 V
V_{OL} = 0.4 V, I_{OL} = 3 mA when V_{DPUX} > 2 V

Figure 9-5. Minimum Pullup Resistance ($R_{p(min)}$) vs Pullup Reference Voltage (V_{DPUX})

10 Power Supply Recommendations

10.1 Power-On Reset

In the event of a glitch or data corruption, the TCA9536 can be reset to its default conditions by using the power-on reset feature. Power-on reset requires that the device go through a power cycle to be completely reset. This reset also happens when the device is powered on for the first time in an application.

The two types of power-on reset are shown in and Figure 10-1.

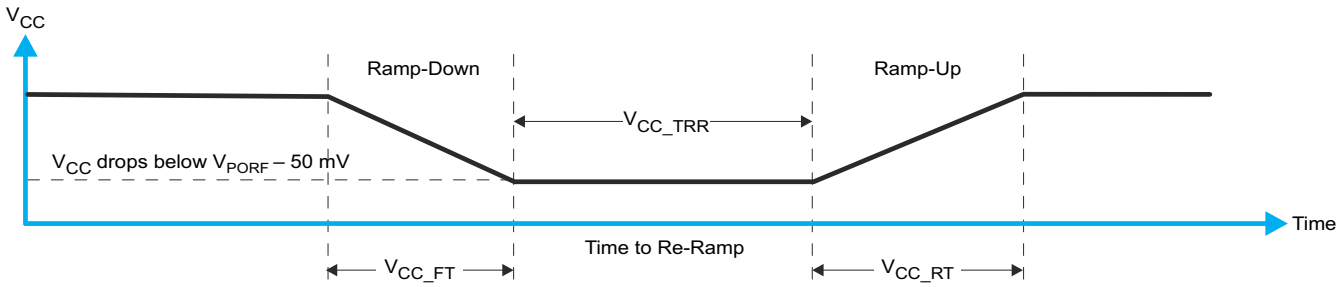

Figure 10-1. V_{CC} is Lowered Below the POR Threshold, Then Ramped Back Up to V_{CC}

Table 10-1 specifies the performance of the power-on reset feature for the device for both types of power-on reset.

Table 10-1. Recommended Supply Sequencing And Ramp Rates

PARAMETER(1)			MIN	MAX	UNIT
V_{CC_FT}	Fall rate	See Figure 10-1	1		ms
V_{CC_RT}	Rise rate	See Figure 10-1	0.1		ms
V_{CC_TRR}	Time to re-ramp (when V_{CC} drops to V_{POR_MIN} – 50 mV or when V_{CC} drops to GND)	See Figure 10-1	2		µs
V_{CC_GH}	Level that V_{CC} can glitch down to, but not cause a functional disruption when V_{CC_GW} = 1 µs	See Figure 10-2		1.2	V
V_{CC_GW}	Glitch width that does not cause a functional disruption when V_{CC_GH} = 0.5 × V_{CC} (For VCC > 3 V)	See Figure 10-2		10	µs

(1) All supply sequencing and ramp rate values are measured at T_A = 25°C

Glitches in the power supply can also affect the power-on reset performance of this device. The glitch width (V_{CC_GW}) and height (V_{CC_GH}) are dependent on each other. The bypass capacitance, source impedance, and device impedance are factors that affect power-on reset performance. Figure 10-2 and Table 10-1 provide more information on how to measure these specifications.

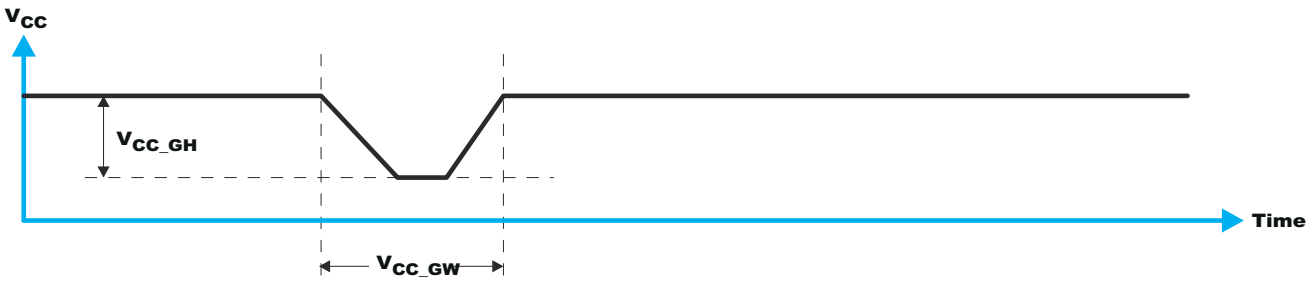

Figure 10-2. Glitch Width and Glitch Height

V_{POR} is critical to the power-on reset. V_{POR} is the voltage level at which the reset condition is released and all the registers and the I^2C/SMBus state machine are initialized to their default states. The value of V_{POR} differs based on the V_{CC} being lowered to or from 0. Figure 10-3 and Table 10-1 provide more details on this specification.

Copyright © 2021 Texas Instruments Incorporated

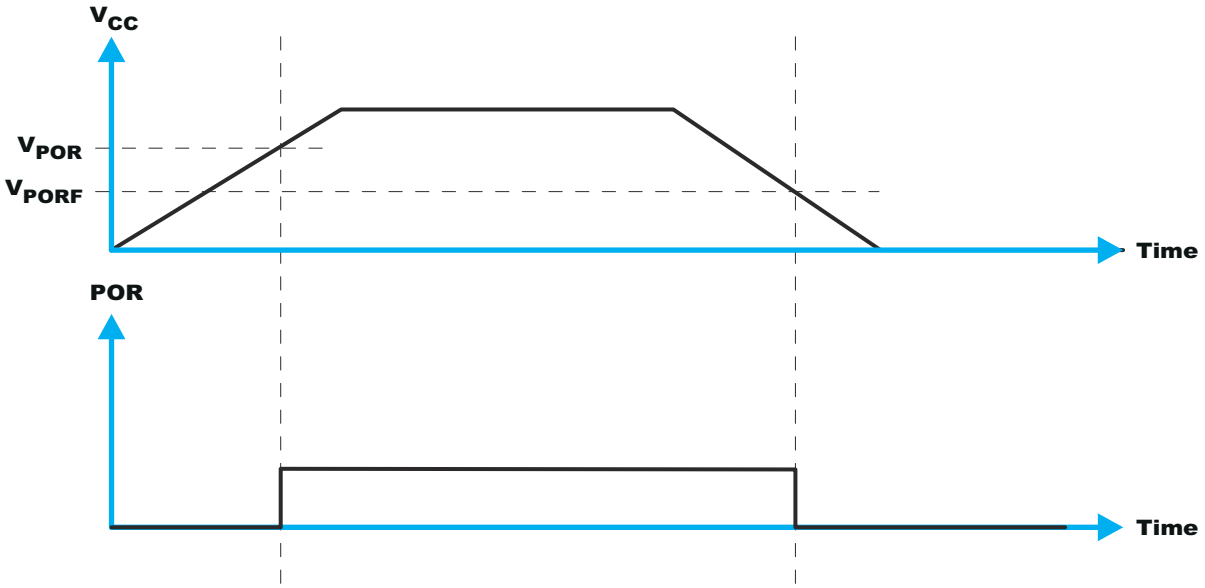

Figure 10-3. V_{POR}

11 Layout

11.1 Layout Guidelines

For printed circuit board (PCB) layout of the TCA9536, common PCB layout practices must be followed but additional concerns related to high-speed data transfer such as matched impedances and differential pairs are not a concern for I^2C signal speeds.

In all PCB layouts, it is a best practice to avoid right angles in signal traces, to fan out signal traces away from each other upon leaving the vicinity of an integrated circuit (IC), and to use thicker trace widths to carry higher amounts of current that commonly pass through power and ground traces. By-pass and de-coupling capacitors are commonly used to control the voltage on the VCC pin, using a larger capacitor to provide additional power in the event of a short power supply glitch and a smaller capacitor to filter out high-frequency ripple. These capacitors must be placed as close to the TCA9536 as possible.

For the layout example provided, it would be possible to fabricate a PCB with only 2 layers by using the top layer for signal routing and the bottom layer as a split plane for power (VCC) and ground (GND). However, a 4 layer board is preferable for boards with higher density signal routing. On a 4 layer PCB, it is common to route signals on the top and bottom layer, dedicate one internal layer to a ground plane, and dedicate the other internal layer to a power plane. In a board layout using planes or split planes for power and ground, vias are placed directly next to the surface mount component pad which needs to attach to VCC or GND and the via is connected electrically to the internal layer or the other side of the board. Vias are also used when a signal trace needs to be routed to the opposite side of the board, but this technique is not demonstrated.

11.2 Layout Example

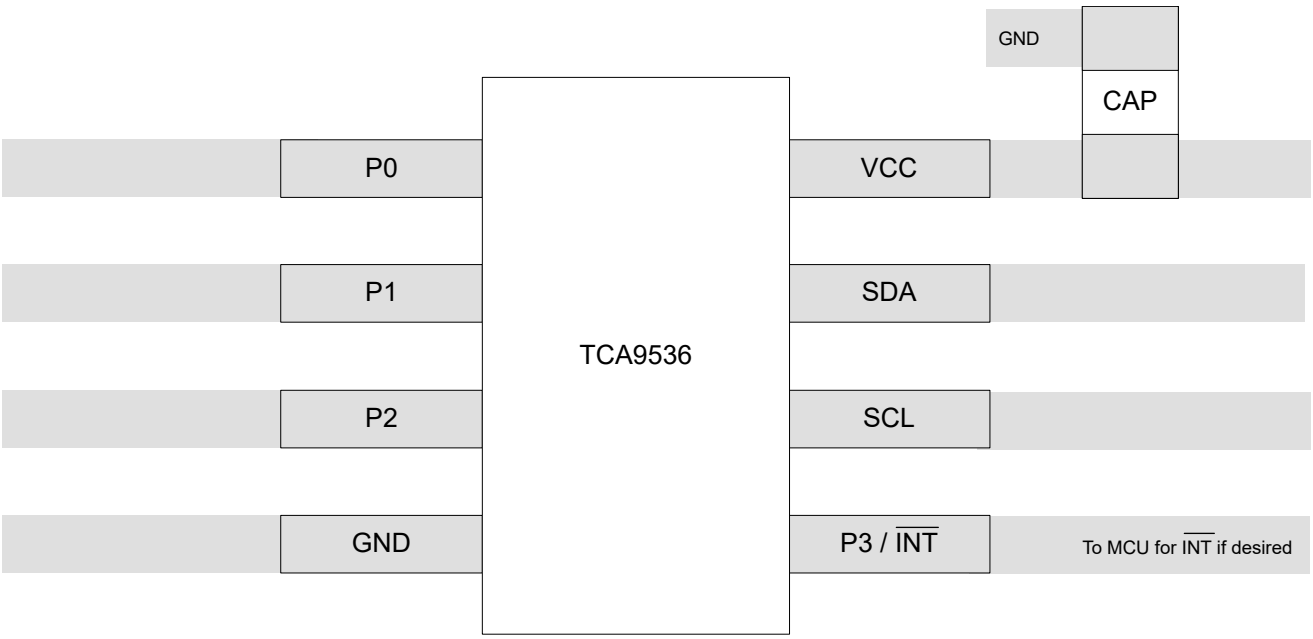

Figure 11-1. Layout Example (DGK)

Copyright © 2021 Texas Instruments Incorporated

12 Device and Documentation Support

12.1 Documentation Support

12.1.1 Related Documentation

For related documentation see the following:

- *I2C Bus Pull-Up Resistor Calculation*
- *Maximum Clock Frequency of I2C Bus Using Repeaters*
- *Introduction to Logic*
- *Understanding the I2C Bus*
- *Choosing the Correct I2C Device for New Designs*

12.2 Receiving Notification of Documentation Updates

To receive notification of documentation updates, navigate to the device product folder on ti.com. Click on *Subscribe to updates* to register and receive a weekly digest of any product information that has changed. For change details, review the revision history included in any revised document.

12.3 Support Resources

TI E2E™ support forums are an engineer's go-to source for fast, verified answers and design help — straight from the experts. Search existing answers or ask your own question to get the quick design help you need.

Linked content is provided "AS IS" by the respective contributors. They do not constitute TI specifications and do not necessarily reflect TI's views; see TI's Terms of Use.

12.4 Trademarks

TI E2E™ is a trademark of Texas Instruments.
All trademarks are the property of their respective owners.

12.5 Electrostatic Discharge Caution

This integrated circuit can be damaged by ESD. Texas Instruments recommends that all integrated circuits be handled with appropriate precautions. Failure to observe proper handling and installation procedures can cause damage.

ESD damage can range from subtle performance degradation to complete device failure. Precision integrated circuits may be more susceptible to damage because very small parametric changes could cause the device not to meet its published specifications.

12.6 Glossary

TI Glossary	This glossary lists and explains terms, acronyms, and definitions.

13 Mechanical, Packaging, and Orderable Information

The following pages include mechanical, packaging, and orderable information. This information is the most current data available for the designated devices. This data is subject to change without notice and revision of this document. For browser-based versions of this data sheet, refer to the left-hand navigation.

Copyright © 2021 Texas Instruments Incorporated

PACKAGING INFORMATION

Orderable part number	Status (1)	Material type (2)	Package | Pins	Package qty | Carrier	RoHS (3)	Lead finish/ Ball material (4)	MSL rating/ Peak reflow (5)	Op temp (°C)	Part marking (6)
TCA9536ADTMR	Active	Production	X2SON (DTM) | 8	5000 | LARGE T&R	Yes	NIPDAUAG	Level-1-260C-UNLIM	-40 to 125	1IR
TCA9536ADTMR.A	Active	Production	X2SON (DTM) | 8	5000 | LARGE T&R	Yes	NIPDAUAG	Level-1-260C-UNLIM	-40 to 125	1IR
TCA9536BDTMR	Active	Production	X2SON (DTM) | 8	5000 | LARGE T&R	Yes	NIPDAUAG	Level-1-260C-UNLIM	-40 to 125	1IS
TCA9536BDTMR.A	Active	Production	X2SON (DTM) | 8	5000 | LARGE T&R	Yes	NIPDAUAG	Level-1-260C-UNLIM	-40 to 125	1IS
TCA9536CDTMR	Active	Production	X2SON (DTM) | 8	5000 | LARGE T&R	Yes	NIPDAUAG	Level-1-260C-UNLIM	-40 to 125	1IT
TCA9536CDTMR.A	Active	Production	X2SON (DTM) | 8	5000 | LARGE T&R	Yes	NIPDAUAG	Level-1-260C-UNLIM	-40 to 125	1IT
TCA9536DGKR	Active	Production	VSSOP (DGK) | 8	2500 | LARGE T&R	Yes	NIPDAU	Level-1-260C-UNLIM	-40 to 125	2I1T
TCA9536DGKR.A	Active	Production	VSSOP (DGK) | 8	2500 | LARGE T&R	Yes	NIPDAU	Level-1-260C-UNLIM	-40 to 125	2I1T
TCA9536DTMR	Active	Production	X2SON (DTM) | 8	5000 | LARGE T&R	Yes	NIPDAUAG	Level-1-260C-UNLIM	-40 to 125	1IQ
TCA9536DTMR.A	Active	Production	X2SON (DTM) | 8	5000 | LARGE T&R	Yes	NIPDAUAG	Level-1-260C-UNLIM	-40 to 125	1IQ

(1) **Status:** For more details on status, see our product life cycle.

(2) **Material type:** When designated, preproduction parts are prototypes/experimental devices, and are not yet approved or released for full production. Testing and final process, including without limitation quality assurance, reliability performance testing, and/or process qualification, may not yet be complete, and this item is subject to further changes or possible discontinuation. If available for ordering, purchases will be subject to an additional waiver at checkout, and are intended for early internal evaluation purposes only. These items are sold without warranties of any kind.

(3) **RoHS values:** Yes, No, RoHS Exempt. See the TI RoHS Statement for additional information and value definition.

(4) **Lead finish/Ball material:** Parts may have multiple material finish options. Finish options are separated by a vertical ruled line. Lead finish/Ball material values may wrap to two lines if the finish value exceeds the maximum column width.

(5) **MSL rating/Peak reflow:** The moisture sensitivity level ratings and peak solder (reflow) temperatures. In the event that a part has multiple moisture sensitivity ratings, only the lowest level per JEDEC standards is shown. Refer to the shipping label for the actual reflow temperature that will be used to mount the part to the printed circuit board.

(6) **Part marking:** There may be an additional marking, which relates to the logo, the lot trace code information, or the environmental category of the part.

Multiple part markings will be inside parentheses. Only one part marking contained in parentheses and separated by a "~" will appear on a part. If a line is indented then it is a continuation of the previous line and the two combined represent the entire part marking for that device.

Important Information and Disclaimer: The information provided on this page represents TI's knowledge and belief as of the date that it is provided. TI bases its knowledge and belief on information provided by third parties, and makes no representation or warranty as to the accuracy of such information. Efforts are underway to better integrate information from third parties. TI has taken and continues to take reasonable steps to provide representative

and accurate information but may not have conducted destructive testing or chemical analysis on incoming materials and chemicals. TI and TI suppliers consider certain information to be proprietary, and thus CAS numbers and other limited information may not be available for release.

In no event shall TI's liability arising out of such information exceed the total purchase price of the TI part(s) at issue in this document sold by TI to Customer on an annual basis.

TAPE AND REEL INFORMATION

REEL DIMENSIONS

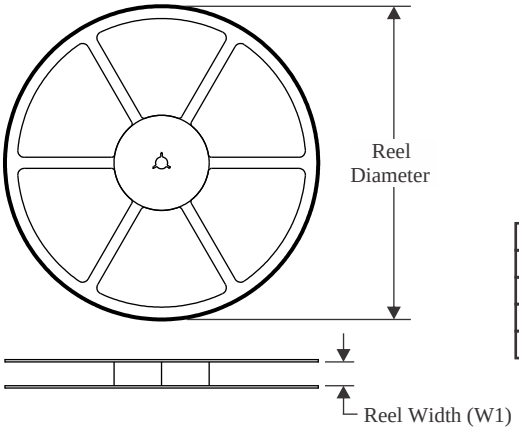

TAPE DIMENSIONS

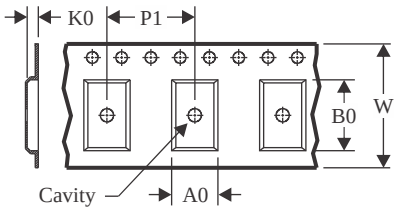

A0	Dimension designed to accommodate the component width
B0	Dimension designed to accommodate the component length
K0	Dimension designed to accommodate the component thickness
W	Overall width of the carrier tape
P1	Pitch between successive cavity centers

QUADRANT ASSIGNMENTS FOR PIN 1 ORIENTATION IN TAPE

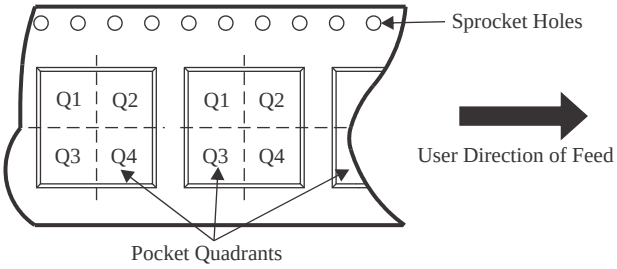

*All dimensions are nominal

Device	Package Type	Package Drawing	Pins	SPQ	Reel Diameter (mm)	Reel Width W1 (mm)	A0 (mm)	B0 (mm)	K0 (mm)	P1 (mm)	W (mm)	Pin1 Quadrant
TCA9536ADTMR	X2SON	DTM	8	5000	178.0	8.4	0.93	1.49	0.43	2.0	8.0	Q1
TCA9536BDTMR	X2SON	DTM	8	5000	178.0	8.4	0.93	1.49	0.43	2.0	8.0	Q1
TCA9536CDTMR	X2SON	DTM	8	5000	178.0	8.4	0.93	1.49	0.43	2.0	8.0	Q1
TCA9536DGKR	VSSOP	DGK	8	2500	330.0	12.4	5.25	3.35	1.25	8.0	12.0	Q1
TCA9536DTMR	X2SON	DTM	8	5000	178.0	8.4	0.93	1.49	0.43	2.0	8.0	Q1

TAPE AND REEL BOX DIMENSIONS

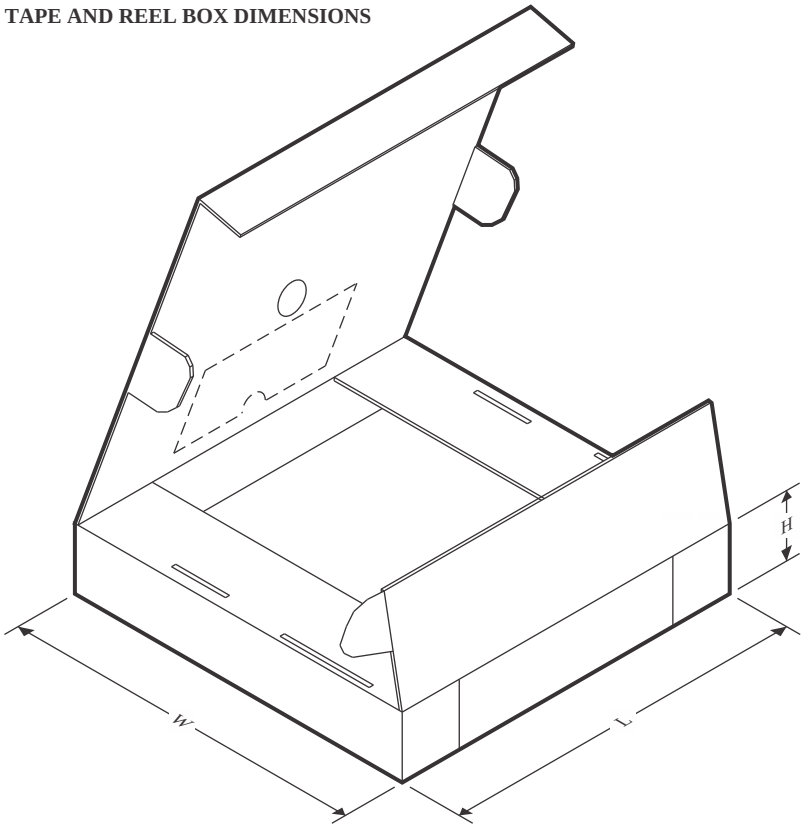

*All dimensions are nominal

Device	Package Type	Package Drawing	Pins	SPQ	Length (mm)	Width (mm)	Height (mm)
TCA9536ADTMR	X2SON	DTM	8	5000	205.0	200.0	33.0
TCA9536BDTMR	X2SON	DTM	8	5000	205.0	200.0	33.0
TCA9536CDTMR	X2SON	DTM	8	5000	205.0	200.0	33.0
TCA9536DGKR	VSSOP	DGK	8	2500	366.0	364.0	50.0
TCA9536DTMR	X2SON	DTM	8	5000	205.0	200.0	33.0

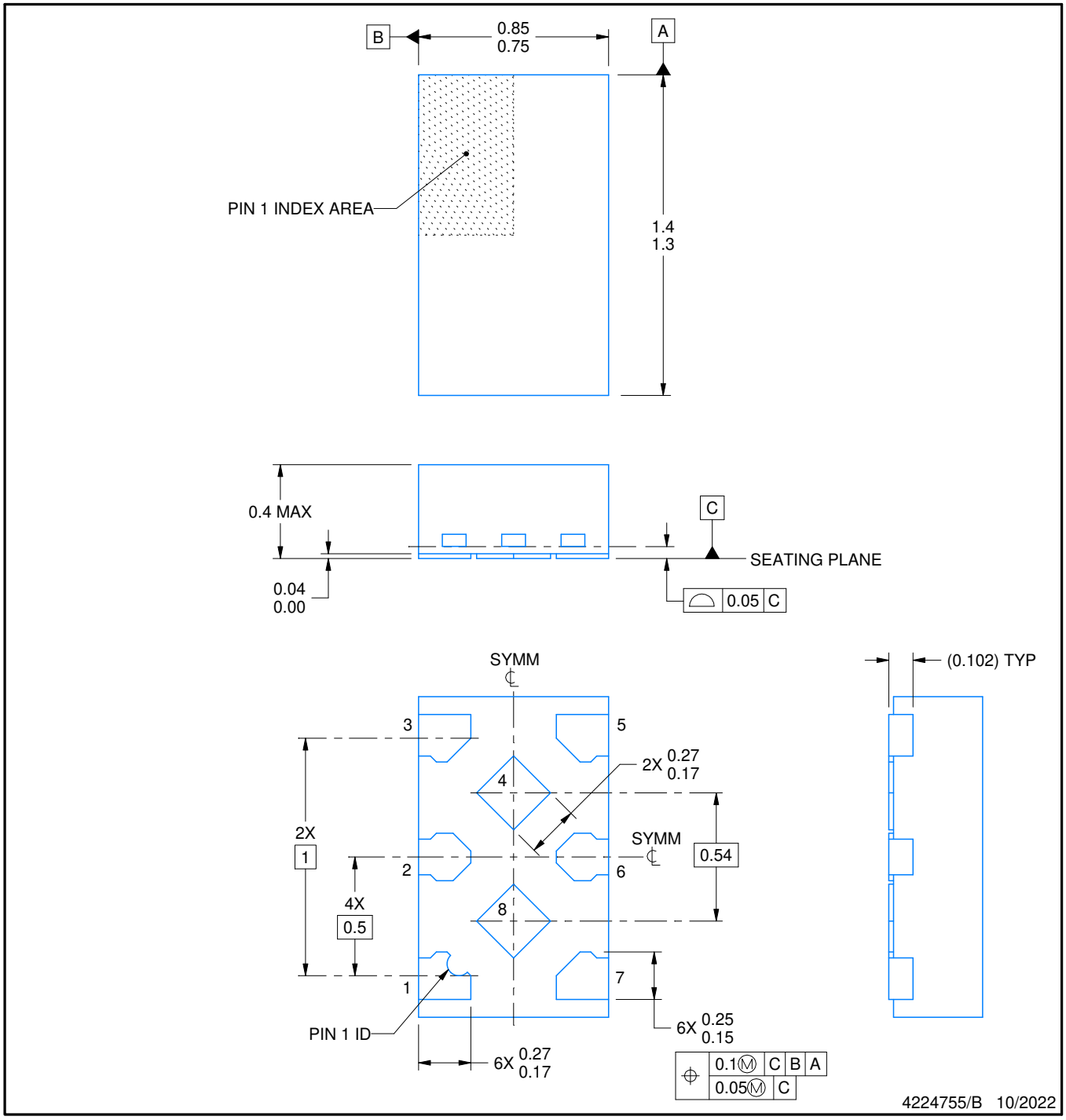

NOTES:

1. All linear dimensions are in millimeters. Any dimensions in parenthesis are for reference only. Dimensioning and tolerancing per ASME Y14.5M.
2. This drawing is subject to change without notice.
3. The package thermal pad(s) must be soldered to the printed circuit board for thermal and mechanical performance.

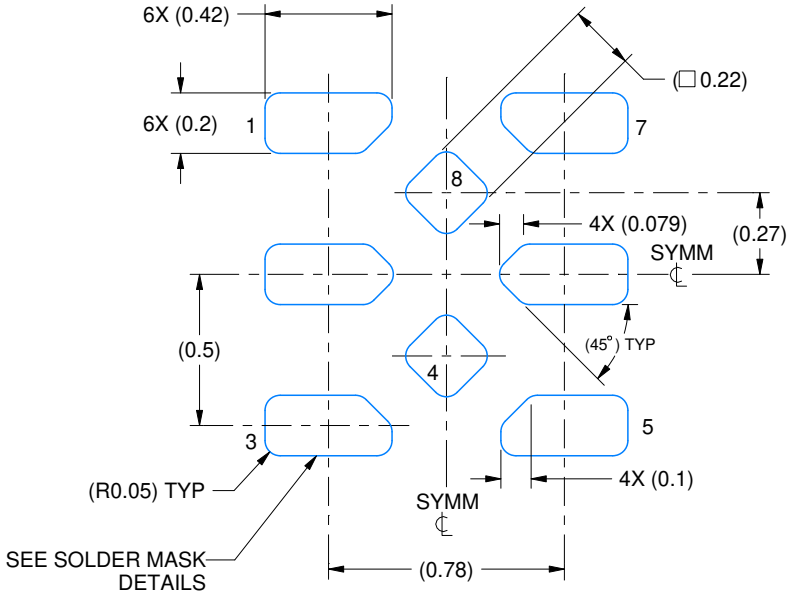

LAND PATTERN EXAMPLE
EXPOSED METAL SHOWN
SCALE:40X

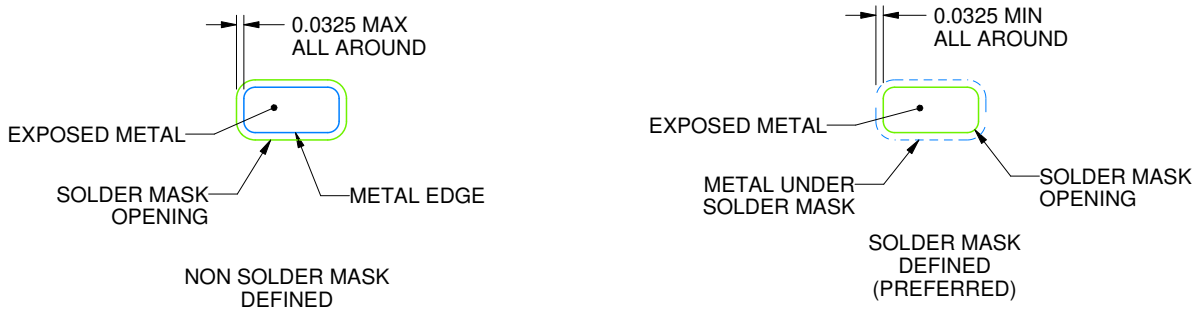

SOLDER MASK DETAILS

4224755/B 10/2022

NOTES: (continued)

4. This package is designed to be soldered to a thermal pad on the board. For more information, see Texas Instruments literature number SLUA271 (www.ti.com/lit/slua271).

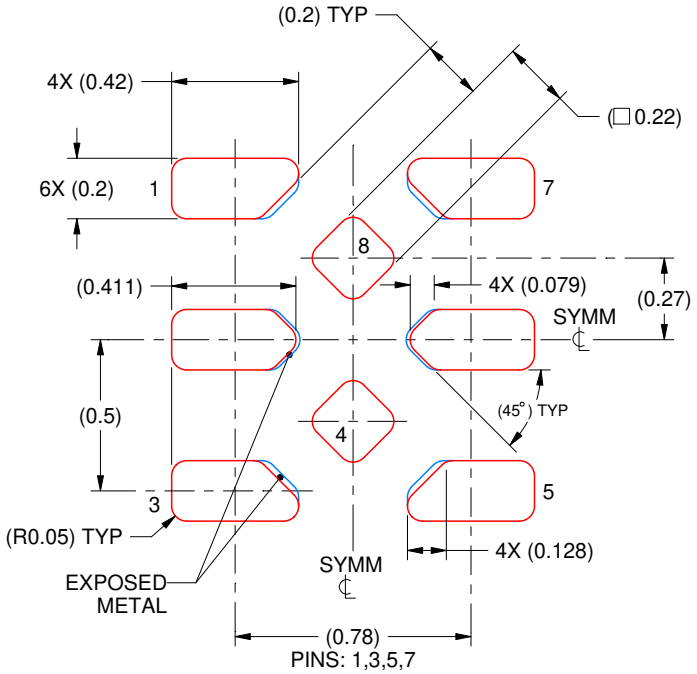

SOLDER PASTE EXAMPLE
BASED ON 0.075 mm THICK STENCIL
SCALE: 40X

4224755/B 10/2022

5. Laser cutting apertures with trapezoidal walls and rounded corners may offer better paste release. IPC-7525 may have alternate design recommendations.

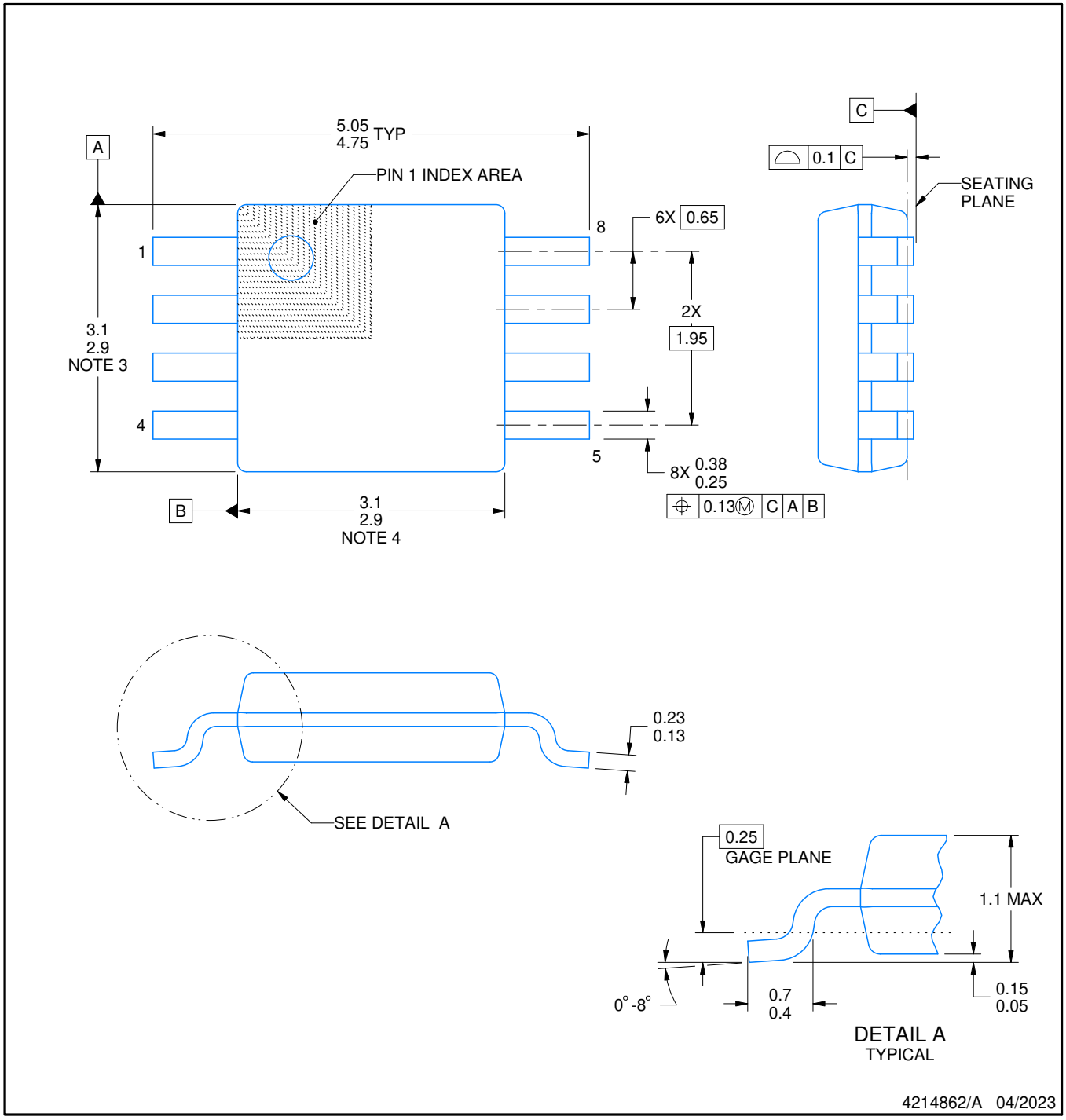

PowerPAD is a trademark of Texas Instruments.

NOTES:

1. All linear dimensions are in millimeters. Any dimensions in parenthesis are for reference only. Dimensioning and tolerancing per ASME Y14.5M.
2. This drawing is subject to change without notice.
3. This dimension does not include mold flash, protrusions, or gate burrs. Mold flash, protrusions, or gate burrs shall not exceed 0.15 mm per side.
4. This dimension does not include interlead flash. Interlead flash shall not exceed 0.25 mm per side.
5. Reference JEDEC registration MO-187.

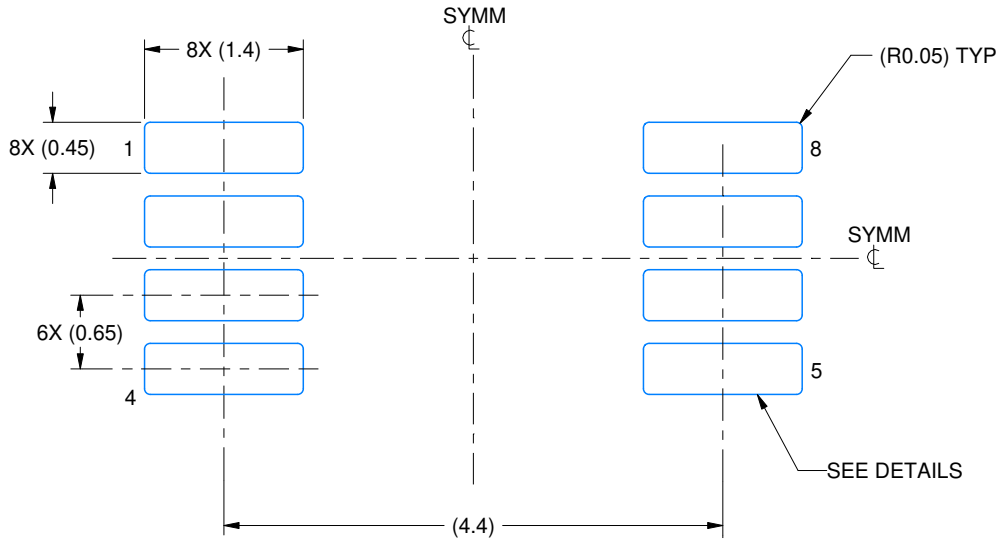

LAND PATTERN EXAMPLE
EXPOSED METAL SHOWN
SCALE: 15X

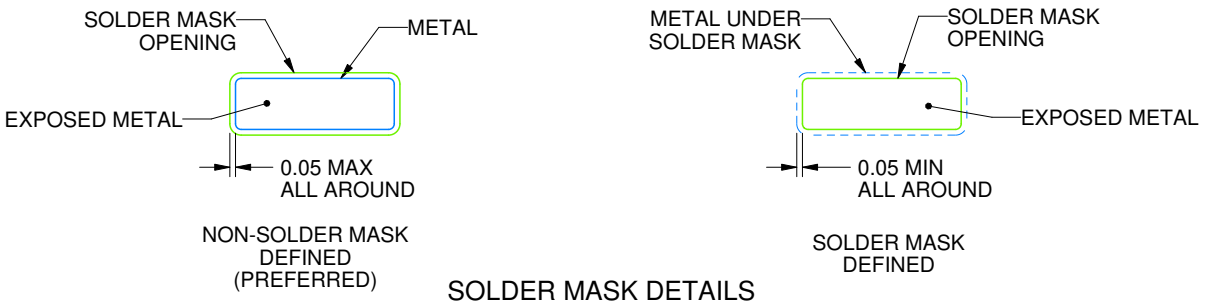

SOLDER MASK DETAILS

4214862/A 04/2023

NOTES: (continued)

6. Publication IPC-7351 may have alternate designs.
7. Solder mask tolerances between and around signal pads can vary based on board fabrication site.
8. Vias are optional depending on application, refer to device data sheet. If any vias are implemented, refer to their locations shown on this view. It is recommended that vias under paste be filled, plugged or tented.
9. Size of metal pad may vary due to creepage requirement.

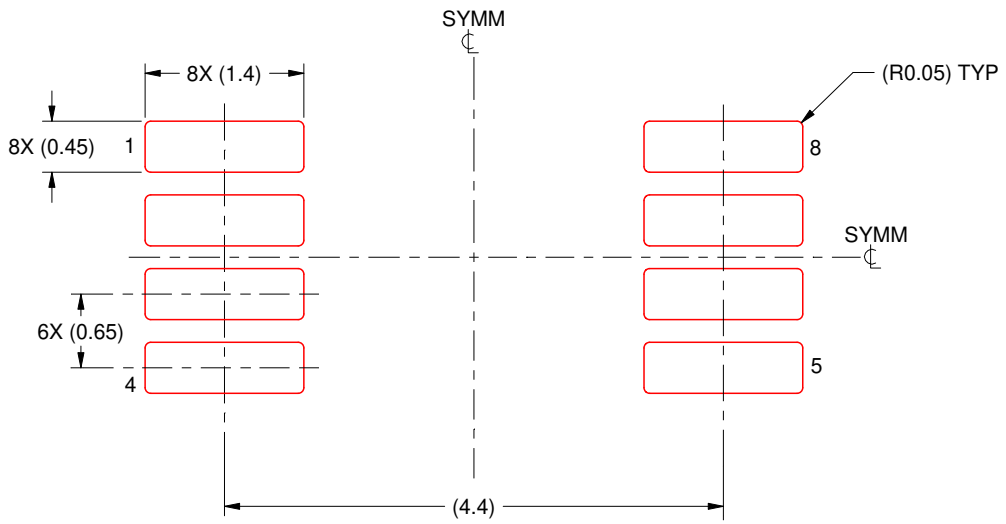

SOLDER PASTE EXAMPLE
SCALE: 15X

4214862/A 04/2023

NOTES: (continued)

11. Laser cutting apertures with trapezoidal walls and rounded corners may offer better paste release. IPC-7525 may have alternate design recommendations.
12. Board assembly site may have different recommendations for stencil design.

IMPORTANT NOTICE AND DISCLAIMER

TI PROVIDES TECHNICAL AND RELIABILITY DATA (INCLUDING DATASHEETS), DESIGN RESOURCES (INCLUDING REFERENCE DESIGNS), APPLICATION OR OTHER DESIGN ADVICE, WEB TOOLS, SAFETY INFORMATION, AND OTHER RESOURCES “AS IS” AND WITH ALL FAULTS, AND DISCLAIMS ALL WARRANTIES, EXPRESS AND IMPLIED, INCLUDING WITHOUT LIMITATION ANY IMPLIED WARRANTIES OF MERCHANTABILITY, FITNESS FOR A PARTICULAR PURPOSE OR NON-INFRINGEMENT OF THIRD PARTY INTELLECTUAL PROPERTY RIGHTS.

These resources are intended for skilled developers designing with TI products. You are solely responsible for (1) selecting the appropriate TI products for your application, (2) designing, validating and testing your application, and (3) ensuring your application meets applicable standards, and any other safety, security, regulatory or other requirements.

These resources are subject to change without notice. TI grants you permission to use these resources only for development of an application that uses the TI products described in the resource. Other reproduction and display of these resources is prohibited. No license is granted to any other TI intellectual property right or to any third party intellectual property right. TI disclaims responsibility for, and you fully indemnify TI and its representatives against any claims, damages, costs, losses, and liabilities arising out of your use of these resources.

TI’s products are provided subject to TI’s Terms of Sale, TI’s General Quality Guidelines, or other applicable terms available either on ti.com or provided in conjunction with such TI products. TI’s provision of these resources does not expand or otherwise alter TI’s applicable warranties or warranty disclaimers for TI products. Unless TI explicitly designates a product as custom or customer-specified, TI products are standard, catalog, general purpose devices.

TI objects to and rejects any additional or different terms you may propose.

Copyright © 2025, Texas Instruments Incorporated

Last updated 10/2025