- **Integrated Asynchronous-Communications Element**
- **Consists of Four Improved TL16C550C ACEs Plus Steering Logic**
- **In FIFO Mode, Each ACE Transmitter and Receiver Is Buffered With 16-Byte FIFO to Reduce the Number of Interrupts to CPU**
- **In TL16C450 Mode, Hold and Shift Registers Eliminate Need for Precise Synchronization Between the CPU and Serial Data**
- **Up to 16-MHz Clock Rate for up to 1-Mbaud Operation with V_{CC} = 3.3 V and 5 V**
- **Programmable Baud-Rate Generators Which Allow Division of Any Input Reference Clock by 1 to ($2^{16}-1$) and Generate an Internal 16 × Clock**
- **Adds or Deletes Standard Asynchronous Communication Bits (Start, Stop, and Parity) to or From the Serial-Data Stream**
- **Independently Controlled Transmit, Receive, Line Status, and Data Set Interrupts**
- **5-V and 3.3-V Operation**
- **Fully Programmable Serial Interface Characteristics:**
  - **5-, 6-, 7-, or 8-Bit Characters**
  - **Even-, Odd-, or No-Parity Bit**
  - **1-, 1 1/2-, or 2-Stop Bit Generation**
  - **Baud Generation (DC to 1-Mbit Per Second)**
- **False Start Bit Detection**
- **Complete Status Reporting Capabilities**
- **Line Break Generation and Detection**
- **Internal Diagnostic Capabilities:**
  - **Loopback Controls for Communications Link Fault Isolation**
  - **Break, Parity, Overrun, Framing Error Simulation**
- **Fully Prioritized Interrupt System Controls**
- **Modem Control Functions ($\overline{CTS}$, $\overline{RTS}$, $\overline{DSR}$, $\overline{DTR}$, $\overline{RI}$, and $\overline{DCD}$)**
- **3-State Outputs Provide TTL Drive Capabilities for Bidirectional Data Bus and Control Bus**
- **Programmable Auto-$\overline{RTS}$ and Auto-$\overline{CTS}$**
- **$\overline{CTS}$ Controls Transmitter in Auto-$\overline{CTS}$ Mode,**
- **RCV FIFO Contents and Threshold Control $\overline{RTS}$ in Auto-$\overline{RTS}$ Mode,**

description

The TL16C554A is an enhanced quadruple version of the TL16C550C asynchronous-communications element (ACE). Each channel performs serial-to-parallel conversion on data characters received from peripheral devices or modems and parallel-to-serial conversion on data characters transmitted by the CPU. The complete status of each channel of the quadruple ACE can be read by the CPU at any time during operation. The information obtained includes the type and condition of the operation performed and any error conditions encountered.

The TL16C554A quadruple ACE can be placed in an alternate FIFO mode, which activates the internal FIFOs to allow 16 bytes (plus three bits of error data per byte in the receiver FIFO) to be stored in both receive and transmit modes. In the FIFO mode of operation, there is a selectable autoflow control feature that can significantly reduce software overhead and increase system efficiency by automatically controlling serial-data flow using $\overline{RTS}$ output and $\overline{CTS}$ input signals. All logic is on the chip to minimize system overhead and maximize system efficiency. Two terminal functions allow signaling of direct-memory access (DMA) transfers. Each ACE includes a programmable baud-rate generator that can divide the timing reference clock input by a divisor between 1 and $2^{16}-1$.

The TL16C554A is available in a 68-pin plastic-leaded chip-carrier (PLCC) FN package, 64-pin plastic quad flatpack (PQFP) PM package and in an 80-pin (TQFP) PN package.

Please be aware that an important notice concerning availability, standard warranty, and use in critical applications of Texas Instruments semiconductor products and disclaimers thereto appears at the end of this data sheet.

PRODUCTION DATA information is current as of publication date. Products conform to specifications per the terms of Texas Instruments standard warranty. Production processing does not necessarily include testing of all parameters.

Copyright © 2010, Texas Instruments Incorporated

FN PACKAGE
(TOP VIEW)

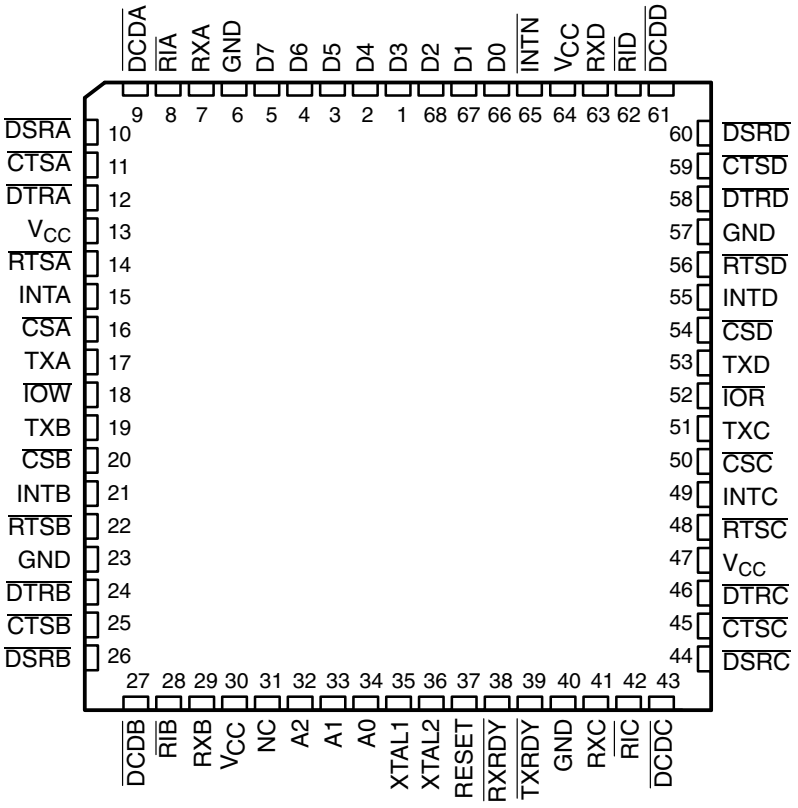

NC – No internal connection

PM PACKAGE
(TOP VIEW)

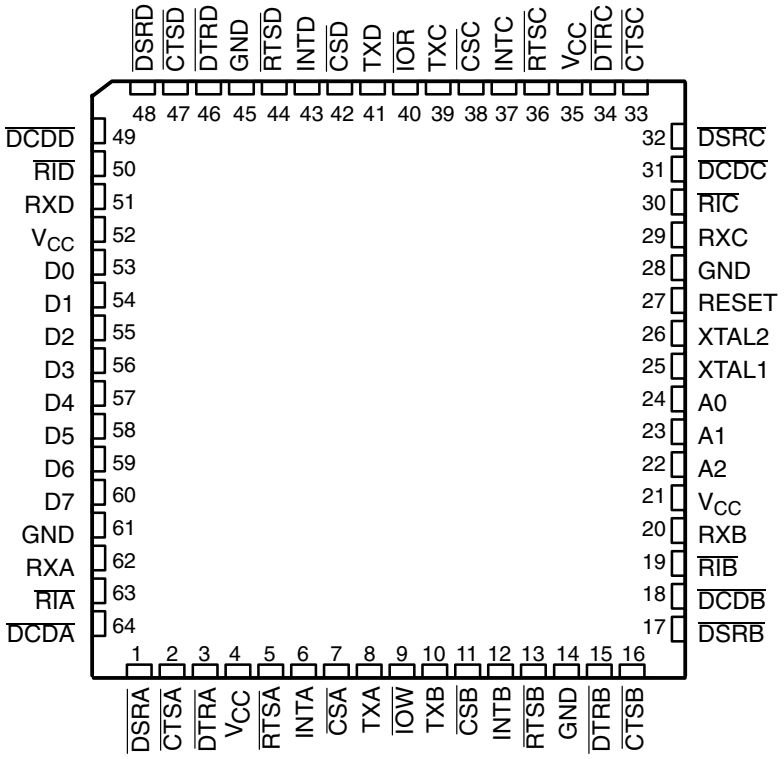

NC – No internal connection

PN PACKAGE
(TOP VIEW)

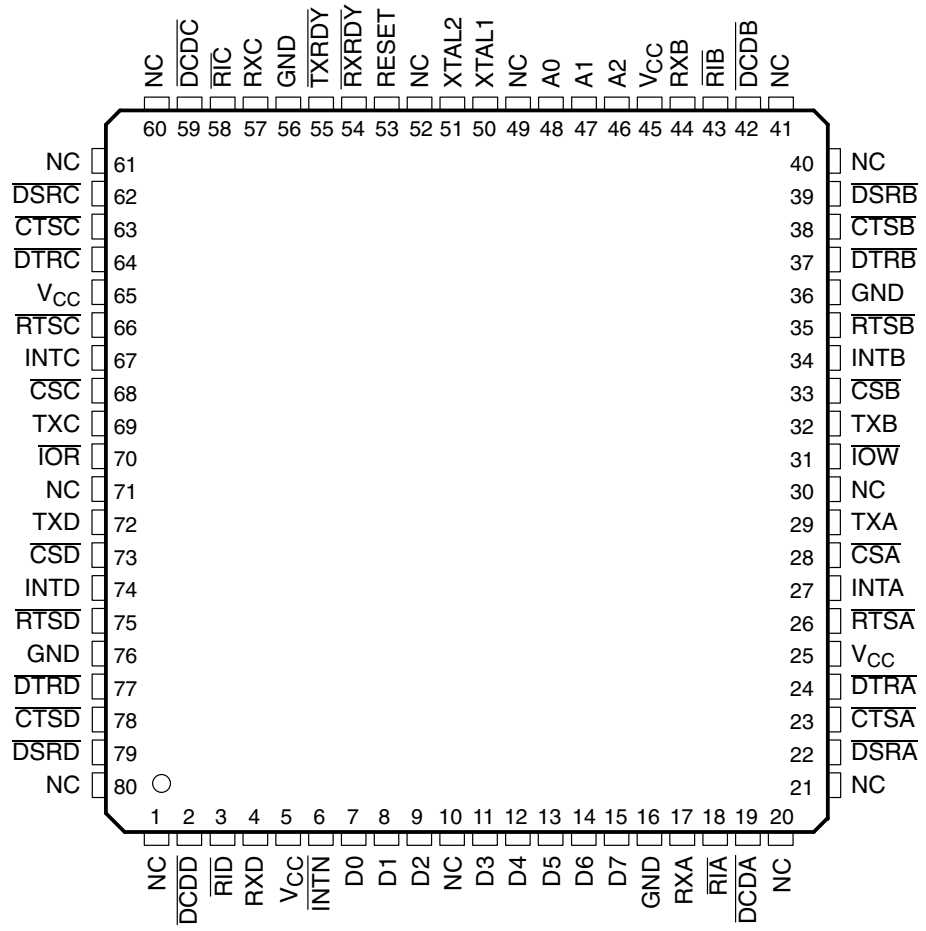

NC – No internal connection

functional block diagram (per channel)

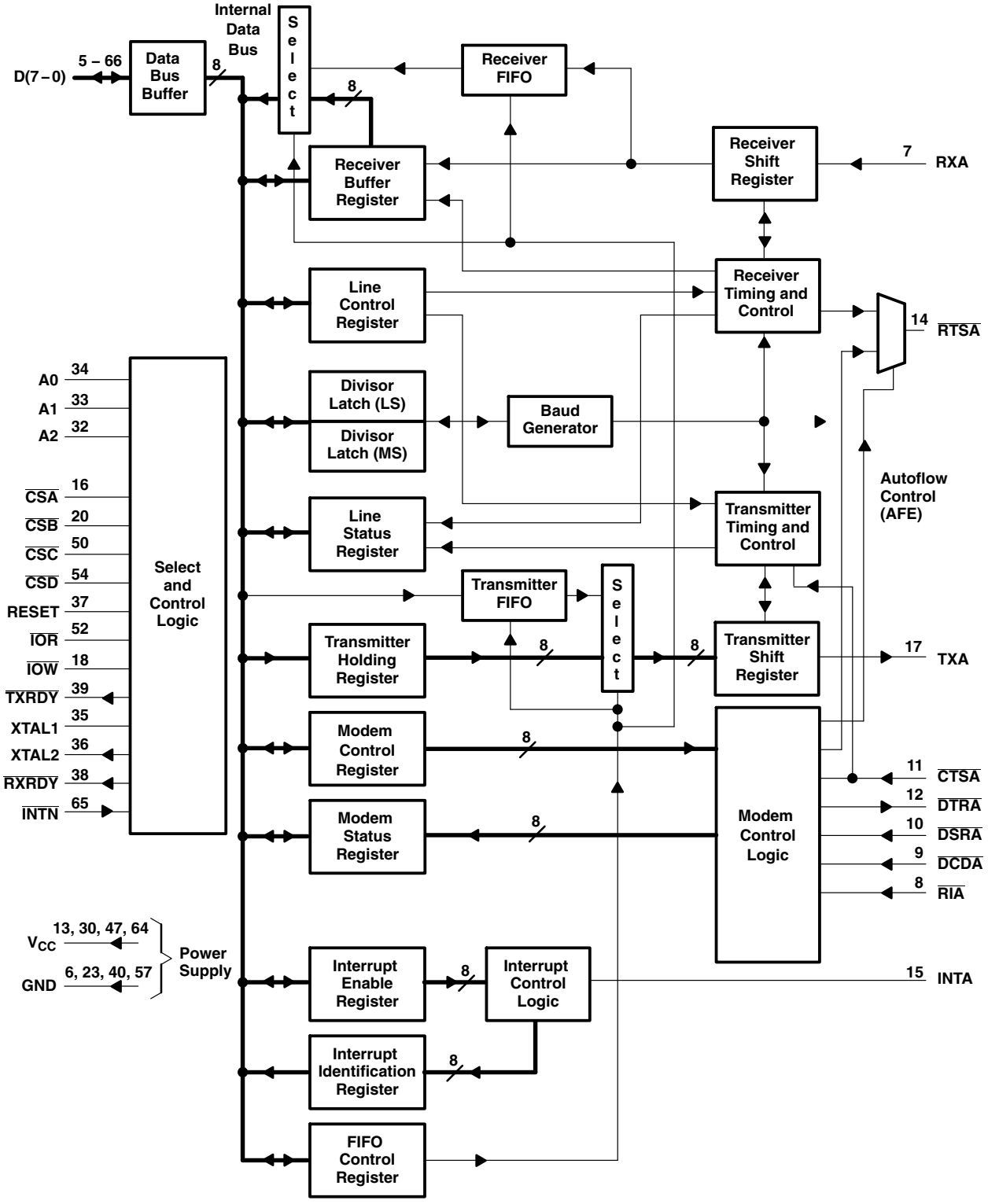

NOTE A: Terminal numbers shown are for the FN package and channel A.

Terminal Functions

TERMINAL				I/O	DESCRIPTION
NAME	FN NO.	PM NO.	PN NO.		
A0 A1 A2	34 33 32	22, 23, 24	48 47 46	I	Register select terminals. A0, A1, and A2 are three inputs used during read and write operations to select the ACE register to read or write.
$\overline{CSA}$, $\overline{CSB}$, $\overline{CSC}$, $\overline{CSD}$	16, 20, 50, 54	7, 11, 38, 42	28, 33, 68, 73	I	Chip select. Each chip select ($\overline{CSx}$) enables read and write operations to its respective channel.
$\overline{CTSA}$, $\overline{CTSB}$, $\overline{CTSC}$, $\overline{CTSD}$	11, 25, 45, 59	2, 16, 33, 47	23, 38, 63, 78	I	Clear to send. $\overline{CTS}$ is a modem status signal. Its condition can be checked by reading bit 4 (CTS) of the modem-status register. Bit 0 (ΔCTS) of the modem-status register indicates that $\overline{CTS}$ has changed state since the last read from the modem-status register. If the modem-status interrupt is enabled when $\overline{CTS}$ changes levels and the auto-$\overline{CTS}$ mode is not enabled, an interrupt is generated. $\overline{CTS}$ is also used in the auto-$\overline{CTS}$ mode to control the transmitter.
D7 – D0	66 – 68 1 – 5	53–60	15–11, 9–7	I/O	Data bus. Eight data lines with 3-state outputs provide a bidirectional path for data, control, and status information between the TL16C554A and the CPU. D0 is the least-significant bit (LSB).
$\overline{DCDA}$, $\overline{DCDB}$, $\overline{DCDC}$, $\overline{DCDD}$	9, 27, 43, 61	18, 31, 49, 64	19,42, 59, 2	I	Data carrier detect. A low on $\overline{DCDx}$ indicates the carrier has been detected by the modem. The condition of this signal is checked by reading bit 7 of the modem-status register.
$\overline{DSRA}$, $\overline{DSRB}$, $\overline{DSRC}$, $\overline{DSRD}$	10, 26, 44, 60	1, 17, 32, 48	22, 39, 62, 79	I	Data set ready. $\overline{DSRx}$ is a modem-status signal. Its condition can be checked by reading bit 5 (DSR) of the modem-status register. $\overline{DSR}$ has no effect on the transmit or receive operation.
$\overline{DTRA}$, $\overline{DTRB}$, $\overline{DTRC}$, $\overline{DTRD}$	12, 24, 46, 58	3, 15, 34, 46	24, 37, 64, 77	O	Data terminal ready. $\overline{DTRx}$ is an output that indicates to a modem or data set that the ACE is ready to establish communications. It is placed in the active state by setting the DTR bit of the modem-control register. $\overline{DTRx}$ is placed in the inactive state (high) either as a result of the master reset during loop-mode operation, or when clearing bit 0 ($\overline{DTR}$) of the modem-control register.
GND	6, 23, 40, 57	14, 28, 45, 61	16, 36, 56, 76		Signal and power ground
$\overline{INTN}$	65		6	I	Interrupt normal. $\overline{INTN}$ operates in conjunction with bit 3 of the modem-status register and affects operation of the interrupts (INTA, INTB, INTC, and INTD) for the four universal asynchronous receiver/transceivers (UARTs) per the following table. **$\overline{INTN}$** — **OPERATION OF INTERRUPTS** Brought low or allowed to float — Interrupts are enabled according to the state of OUT2 (MCR bit 3). When the MCR bit 3 is cleared, the 3-state interrupt output of that UART is in the high-impedance state. When the MCR bit 3 is set, the interrupt output of the UART is enabled. Brought high — Interrupts are always enabled, overriding the OUT2 enables.
INTA, INTB, INTC, INTD	15, 21, 49, 55	6, 12, 37, 43	27, 34, 67, 74	O	External interrupt output. The INTx outputs go high (when enabled by the interrupt register) and inform the CPU that the ACE has an interrupt to be serviced. Four conditions that cause an interrupt to be issued are: receiver error, receiver data available or timeout (FIFO mode only), transmitter holding register empty, and an enabled modem-status interrupt. The interrupt is disabled when it is serviced or as the result of a master reset.
$\overline{IOR}$	52	40	70	I	Read strobe. A low level on $\overline{IOR}$ transfers the contents of the selected register to the external CPU bus.
$\overline{IOW}$	18	9	31	I	Write strobe. $\overline{IOW}$ allows the the CPU to write to the register selected by the address.
RESET	37	27	53	I	Master reset. When active, RESET clears most ACE registers and sets the state of various signals. The transmitter output and the receiver input are disabled during reset time.

Terminal Functions (Continued)

TERMINAL				I/O	DESCRIPTION
NAME	FN NO.	PM NO.	PN NO.		
$\overline{RIA}$, $\overline{RIB}$, $\overline{RIC}$, $\overline{RID}$		19, 30, 50, 63	18, 43, 58, 3	I	Ring detect indicator. A low on $\overline{RIx}$ indicates the modem has received a ring signal from the telephone line. The condition of this signal can be checked by reading bit 6 of the modem-status register.
$\overline{RTSA}$, $\overline{RTSB}$, $\overline{RTSC}$, $\overline{RTSD}$		5, 13, 36, 44	26, 35, 66, 75	O	Request to send. When active, $\overline{RTS}$ informs the modem or data set that the ACE is ready to receive data. $\overline{RTS}$ is set to the active level by setting the RTS modem-control register bit, and is set to the inactive (high) level either as a result of a master reset, or during loop-mode operations, or by clearing bit 1 (RTS) of the MCR. In the auto-$\overline{RTS}$ mode, $\overline{RTS}$ is set to the inactive level by the receiver threshold-control logic.
RXA, RXB RXC, RXD	7, 29, 41, 63	20, 29, 51, 62	17, 44, 57, 4	I	Serial input. RXx is a serial-data input from a connected communications device. During loopback mode, the RXx input is disabled from external connection and connected to the TXx output internally.
$\overline{RXRDY}$	38		54	O	Receive ready. $\overline{RXRDY}$ goes low when the receive FIFO is full. It can be used as a single transfer or multitransfer.
TXA, TXB TXC, TXD	17, 19, 51, 53	8, 10, 39, 41	29, 32, 69, 72	O	Transmit outputs. TXx is a composite serial-data output connected to a communications device. TXA, TXB, TXC, and TXD are set to the marking (high) state as a result of reset.
$\overline{TXRDY}$	39		55	O	Transmit ready. $\overline{TXRDY}$ goes low when the transmit FIFO is full. It can be used as a single transfer or multitransfer function.
V_{CC}	13, 30, 47, 64	21, 35, 52	5, 25, 45, 65		Power supply
XTAL1	35	25	50	I	Crystal input 1 or external clock input. A crystal can be connected to XTAL1 and XTAL2 to utilize the internal oscillator circuit. An external clock can be connected to drive the internal-clock circuits.
XTAL2	36	26	51	O	Crystal output 2 or buffered clock output (see XTAL1).

absolute maximum ratings over free-air temperature range (unless otherwise noted)†

Supply voltage range, V_{CC} (see Note 1) . . . . . −0.5 V to 7 V
Input voltage range at any input, V_I . . . . . −0.5 V to 7 V
Output voltage range, V_O . . . . . −0.5 V to V_{CC} + 3 V
Continuous total-power dissipation at (or below) 70°C . . . . . 500 mW
Operating free-air temperature range, T_A: TL16C554A . . . . . 0°C to 70°C
TL16C554AI . . . . . −40°C to 85°C
Storage temperature range, T_{stg} . . . . . −65°C to 150°C

† Stresses beyond those listed under “absolute maximum ratings” may cause permanent damage to the device. These are stress ratings only, and functional operation of the device at these or any other conditions beyond those indicated under “recommended operating conditions” is not implied. Exposure to absolute-maximum-rated conditions for extended periods may affect device reliability.

NOTE 1: All voltage levels are with respect to GND.

recommended operating conditions, standard voltage (5 V-nominal)

		MIN	NOM	MAX	UNIT
Supply voltage, V_{CC}		4.75	5	5.25	V
Clock high-level input voltage at XTAL1, $V_{IH(CLK)}$		2		V_{CC}	V
Clock low-level input voltage at XTAL1, $V_{IL(CLK)}$		–0.5		0.8	V
High-level input voltage, V_{IH}		2		V_{CC}	V
Low-level input voltage, V_{IL}		–0.5		0.8	V
Clock frequency, f_{clock}				16	MHz
Operating free-air temperature, T_A	TL16C554A	0		70	°C
	TL16C554AI	–40		85	°C

electrical characteristics over recommended ranges of operating free-air temperature and supply voltage, standard voltage (5-V nominal) (unless otherwise noted)

PARAMETER		TEST CONDITIONS	MIN	TYP†	MAX	UNIT
V_{OH}‡	High-level output voltage	I_{OH} = –1 mA	2.4			V
V_{OL}‡	Low-level output voltage	I_{OL} = 1.6 mA			0.4	V
I_{Ikg}	Input leakage current	V_{CC} = 5.25 V, GND = 0, V_I = 0 to 5.25 V, All other terminals floating			±10	µA
I_{OZ}	High-impedance output current	V_{CC} = 5.25 V, GND = 0, V_O = 0 to 5.25 V, Chip selected in write mode or chip deselected			±20	µA
I_{CC}	Supply current	V_{CC} = 5.25 V, T_A = 25°C, RX, $\overline{DSR}$, $\overline{DCD}$, CTS, and $\overline{RI}$ at 2 V, All other inputs at 0.8 V, XTAL1 at 4 MHz, No load on outputs, Baud rate = 50 kilobits per second			50	mA
$C_{i(XTAL1)}$	Clock input capacitance	V_{CC} = 0, V_{SS} = 0, all other terminals grounded, f = 1 MHz, T_A = 25°C		15	20	pF
$C_{o(XTAL2)}$	Clock output capacitance			20	30	pF
C_i	Input capacitance			6	10	pF
C_o	Output capacitance			10	20	pF

† All typical values are at V_{CC} = 5 V, T_A = 25°C.
‡ These parameters apply for all outputs except XTAL2.

recommended operating conditions, low voltage (3.3-V nominal)

		MIN	NOM	MAX	UNIT
Supply voltage, V_{CC}		3	3.3	3.6	V
Clock high-level input voltage at XTAL1, $V_{IH(CLK)}$		2		V_{CC}	V
Clock low-level input voltage at XTAL1, $V_{IL(CLK)}$		–0.5		0.8	V
High-level input voltage, V_{IH}		2		V_{CC}	V
Low-level input voltage, V_{IL}		–0.5		0.8	V
Clock frequency, f_{clock}				16	MHz
Operating free-air temperature, T_A	TL16C554A	0		70	°C
	TL16C554AI	–40		85	°C

electrical characteristics over recommended ranges of operating free-air temperature and supply voltage, low voltage (3.3-V nominal) (unless otherwise noted)

PARAMETER		TEST CONDITIONS	MIN	TYP†	MAX	UNIT
V_{OH}‡	High-level output voltage	I_{OH} = –1 mA	2.4			V
V_{OL}‡	Low-level output voltage	I_{OL} = 1.6 mA			0.4	V
I_{Ikg}	Input leakage current	V_{CC} = 3.6 V, GND = 0, V_I = 0 to 3.6 V, All other terminals floating			±10	µA
I_{OZ}	High-impedance output current	V_{CC} = 3.6 V, GND = 0, V_O = 0 to 3.6 V, Chip selected in write mode or chip deselected			±20	µA
I_{CC}	Supply current	V_{CC} = 3.6 V, T_A = 25°C, RX, $\overline{DSR}$, $\overline{DCD}$, CTS, and $\overline{RI}$ at 2 V, All other inputs at 0.8 V, XTAL1 at 4 MHz, No load on outputs, Baud rate = 50 kilobits per second			40	mA
$C_{i(XTAL1)}$	Clock input capacitance	V_{CC} = 0, V_{SS} = 0, all other terminals grounded, f = 1 MHz, T_A = 25°C		15	20	pF
$C_{o(XTAL2)}$	Clock output capacitance			20	30	pF
C_i	Input capacitance			6	10	pF
C_o	Output capacitance			10	20	pF

† All typical values are at V_{CC} = 3.3 V, T_A = 25°C.
‡ These parameters apply for all outputs except XTAL2.

clock timing requirements over recommended ranges of operating free-air temperature and supply voltage (see Figure 1)

		MIN	MAX	UNIT
t_{w1}	Pulse duration, clock high (external clock)	31		ns
t_{w2}	Pulse duration, clock low (external clock)	31		ns
t_{w3}	Pulse duration, RESET	1000		ns

read cycle timing requirements over recommended ranges of operating free-air temperature and supply voltage (see Figure 4)

		MIN	MAX	UNIT
t_{w4}	Pulse duration, $\overline{IOR}$ low	75		ns
t_{su1}	Setup time, $\overline{CSx}$ valid before $\overline{IOR}$ low (see Note 2)	10		ns
t_{su2}	Setup time, A2 – A0 valid before $\overline{IOR}$ low (see Note 2)	15		ns
t_{h1}	Hold time, A2 – A0 valid after $\overline{IOR}$ high (see Note 2)	0		ns
t_{h2}	Hold time, $\overline{CSx}$ valid after $\overline{IOR}$ high (see Note 2)	0		ns
t_{d1}	Delay time, $t_{su2} + t_{w4} + t_{d2}$ (see Note 3)	140		ns
t_{d2}	Delay time, $\overline{IOR}$ high to $\overline{IOR}$ or $\overline{IOW}$ low	50		ns

NOTES: 2. The internal address strobe is always active.
3. In the FIFO mode, t_{d1} = 425 ns (min) between reads of the receiver FIFO and the status registers (interrupt-identification register and line-status register).

write cycle timing requirements over recommended ranges of operating free-air temperature and supply voltage (see Figure 5)

		MIN	MAX	UNIT
t_{w5}	Pulse duration, $\overline{IOW}\downarrow$	50		ns
t_{su3}	Setup time, $\overline{CSx}$ valid before $\overline{IOW}\downarrow$ (see Note 2)	10		ns
t_{su4}	Setup time, A2 – A0 valid before $\overline{IOW}\downarrow$ (see Note 2)	15		ns
t_{su5}	Setup time, D7 – D0 valid before $\overline{IOW}\uparrow$	10		ns
t_{h3}	Hold time, A2 – A0 valid after $\overline{IOW}\uparrow$ (see Note 2)	5		ns
t_{h4}	Hold time, $\overline{CSx}$ valid after $\overline{IOW}\uparrow$ (see Note 2)	5		ns
t_{h5}	Hold time, D7 – D0 valid after $\overline{IOW}\uparrow$	25		ns
t_{d3}	Delay time, $t_{su4} + t_{w5} + t_{d4}$	120		ns
t_{d4}	Delay time, $\overline{IOW}\uparrow$ to $\overline{IOW}$ or $\overline{IOR}\downarrow$	55		ns

NOTE 2: The internal address strobe is always active.

read cycle switching characteristics over recommended ranges of operating free-air temperature and supply voltage, C_L = 100 pF (see Note 4 and Figure 4)

PARAMETER		MIN	MAX	UNIT
t_{en}	Enable time, $\overline{IOR}\downarrow$ to D7 – D0 valid		30	ns
t_{dis}	Disable time, $\overline{IOR}\uparrow$ to D7 – D0 released	0	20	ns

NOTE 4: V_{OL} and V_{OH} (and the external loading) determine the charge and discharge time.

transmitter switching characteristics over recommended ranges of operating free-air temperature and supply voltage (see Figures 6, 7, and 8)

PARAMETER		TEST CONDITIONS	MIN	MAX	UNIT
t_{d5}	Delay time, INTx↓ to TXx↓ at start	See Note 7	8	24	RCLK cycles
t_{d6}	Delay time, TXx↓ at start to INTx↑	See Note 5	8	8	RCLK cycles
t_{d7}	Delay time, $\overline{IOW}$ high or low (WR THR) to INTx↑	See Note 5	16	32	RCLK cycles
t_{d8}	Delay time, TXx↓ at start to $\overline{TXRDY}$↓	C_L = 100 pF		8	RCLK cycles
t_{pd1}	Propagation delay time, $\overline{IOW}$ (WR THR)↓ to INTx↓	C_L = 100 pF		35	ns
t_{pd2}	Propagation delay time, $\overline{IOR}$ (RD IIR)↑ to INTx↓	C_L = 100 pF		30	ns
t_{pd3}	Propagation delay time, $\overline{IOW}$ (WR THR)↑ to $\overline{TXRDY}$↑	C_L = 100 pF		50	ns

NOTE 5: If the transmitter interrupt delay is active, this delay is lengthened by one character time minus the last stop-bit time.

receiver switching characteristics over recommended ranges of operating free-air temperature and supply voltage (see Figures 9 through 13)

PARAMETER		TEST CONDITIONS	MIN	MAX	UNIT
t_{d9}	Delay time, stop bit to INTx↑ or stop bit to $\overline{RXRDY}$↓ or read RBR to set interrupt	See Note 6		1	RCLK cycle
t_{pd4}	Propagation delay time, Read RBR/LSR to INTx↓/LSR interrupt↓	C_L = 100 pF, See Note 7		40	ns
t_{pd5}	Propagation delay time, $\overline{IOR}$ RCLK↓ to $\overline{RXRDY}$↑	See Note 7		30	ns

NOTES: 6. The receiver data available indicator, the overrun error indicator, the trigger level interrupts, and the active $\overline{RXRDY}$ indicator are delayed three RCLK (internal receiver timing clock) cycles in the FIFO mode (FCR0 = 1). After the first byte has been received, status indicators (PE, FE, BI) are delayed three RCLK cycles. These indicators are updated immediately for any further bytes received after $\overline{IOR}$ goes active for a read from the RBR register. There are eight RCLK cycle delays for trigger change level interrupts.

7. RCLK and baudout are internal signals derived from divisor latches LSB (DLL) and MSB (DLM) and input clock.

modem control switching characteristics over recommended ranges of operating free-air temperature and supply voltage, C_L = 100 pF (see Figures 14, 15, 16, and 17)

PARAMETER		MIN	MAX	UNIT
t_{pd6}	Propagation delay time, $\overline{IOW}$ (WR MCR)↑ to $\overline{RTSx}$, $\overline{DTRx}$↑		50	ns
t_{pd7}	Propagation delay time, modem input $\overline{CTSx}$, $\overline{DSRx}$, and $\overline{DCDx}$ ↓↑ to INTx↑		30	ns
t_{pd8}	Propagation delay time, $\overline{IOR}$ (RD MSR)↑ to interrupt↓		35	ns
t_{pd9}	Propagation delay time, $\overline{RIx}$↑ to $\overline{INTx}$↑		30	ns
t_{pd10}	Propagation delay time, $\overline{CTS}$ low to SOUT↓ (See Note 7)		24	baudout cycles
t_{su6}	Setup time $\overline{CTS}$ high to midpoint of Tx stop bit		2	baudout cycles
t_{pd11}	Propagation delay time, RCV threshold byte to $\overline{RTS}$↑		2	baudout cycles
t_{pd12}	Propagation delay time, $\overline{IOR}$ (RD RBR) low (read of last byte in receive FIFO) to $\overline{RTS}$↓		2	baudout cycles
t_{pd13}	Propagation delay time, first data bit of 16th character to $\overline{RTS}$↑		2	baudout cycles
t_{pd14}	Propagation delay time, $\overline{IOR}$ (RD RBR) low to $\overline{RTS}$↓		2	baudout cycles

7. RCLK and baudout are internal signals derived from divisor latches LSB (DLL) and MSB (DLM) and input clock.

PARAMETER MEASUREMENT INFORMATION

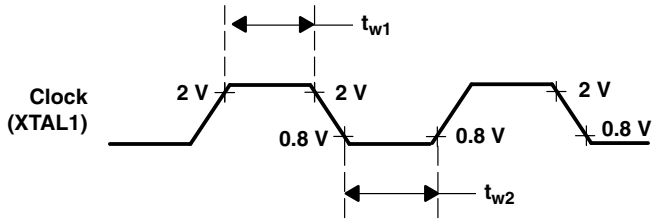

f_{clock} = 16 MHz MAX

(a) CLOCK INPUT VOLTAGE WAVEFORM

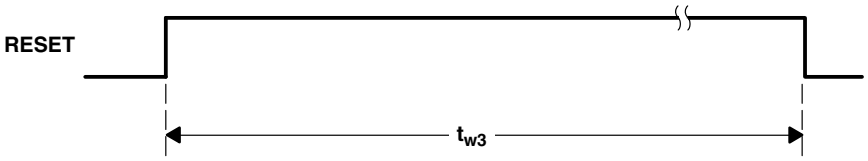

(b) RESET VOLTAGE WAVEFORM

Figure 1. Clock Input and RESET Voltage Waveforms

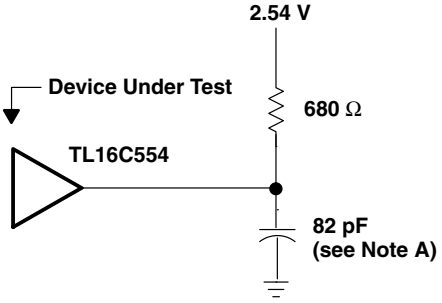

NOTE A: This includes scope and jig capacitance.

Figure 2. Output Load Circuit

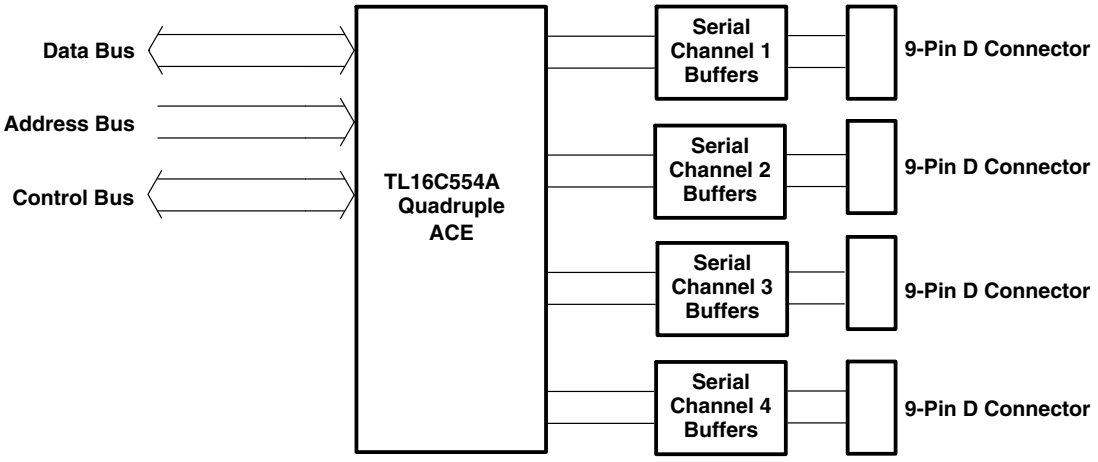

Figure 3. Basic Test Configuration

PARAMETER MEASUREMENT INFORMATION

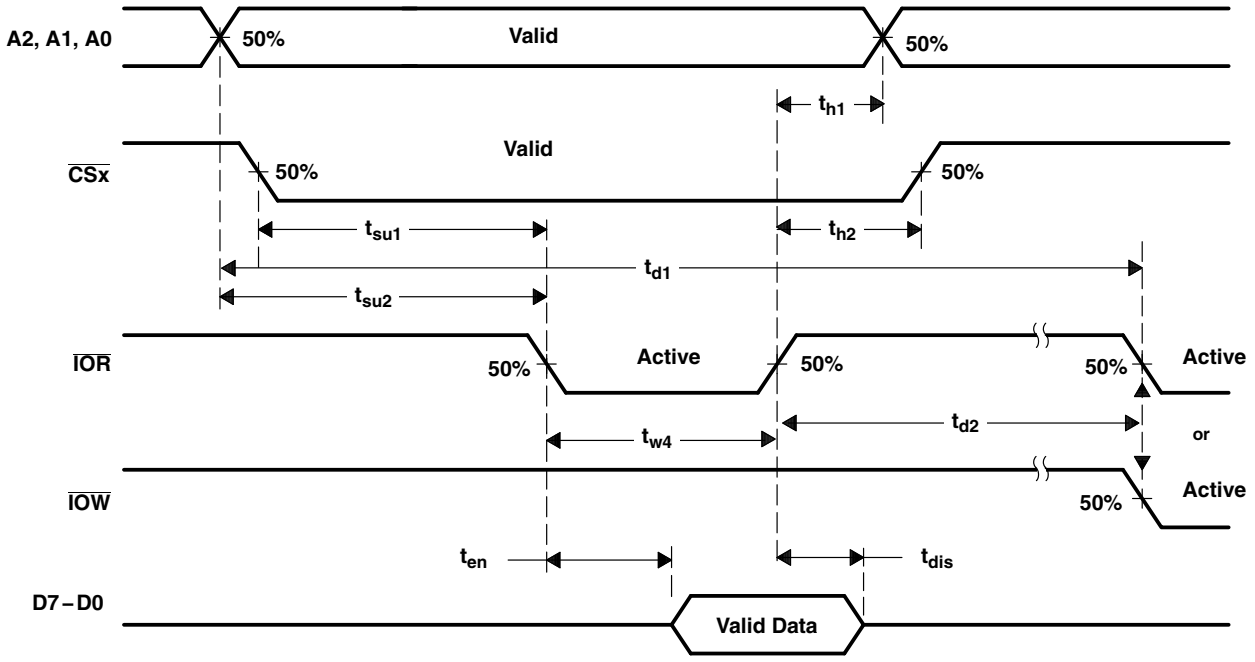

Figure 4. Read Cycle Timing Waveforms

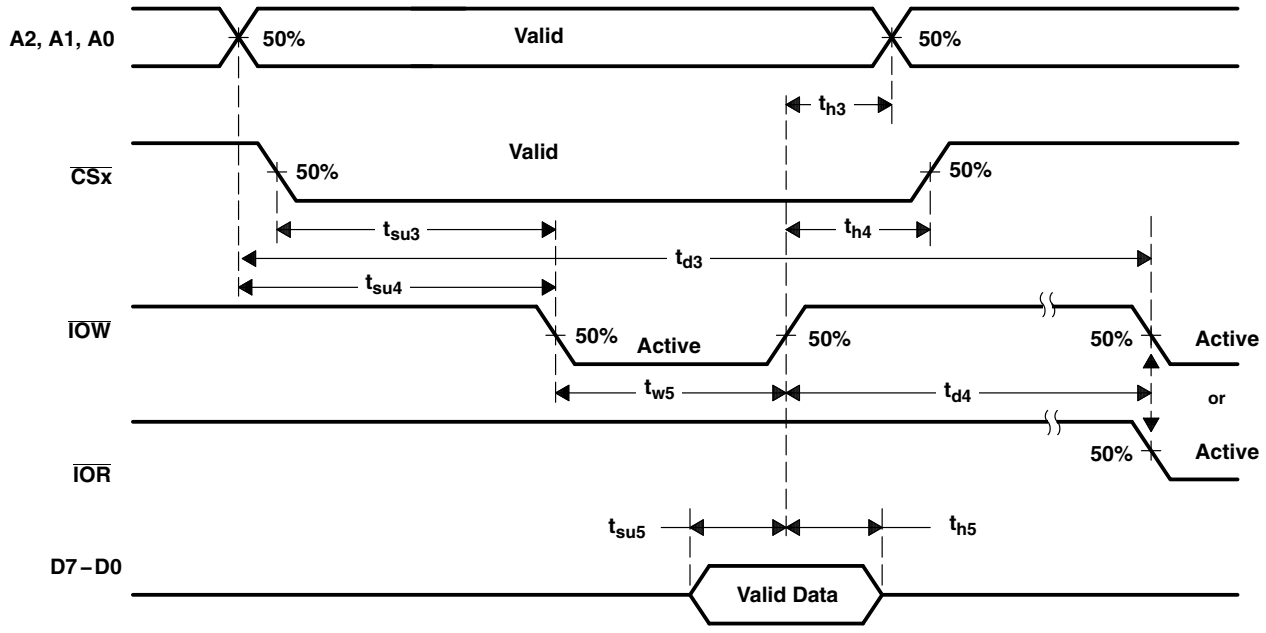

Figure 5. Write Cycle Timing Waveforms

PARAMETER MEASUREMENT INFORMATION

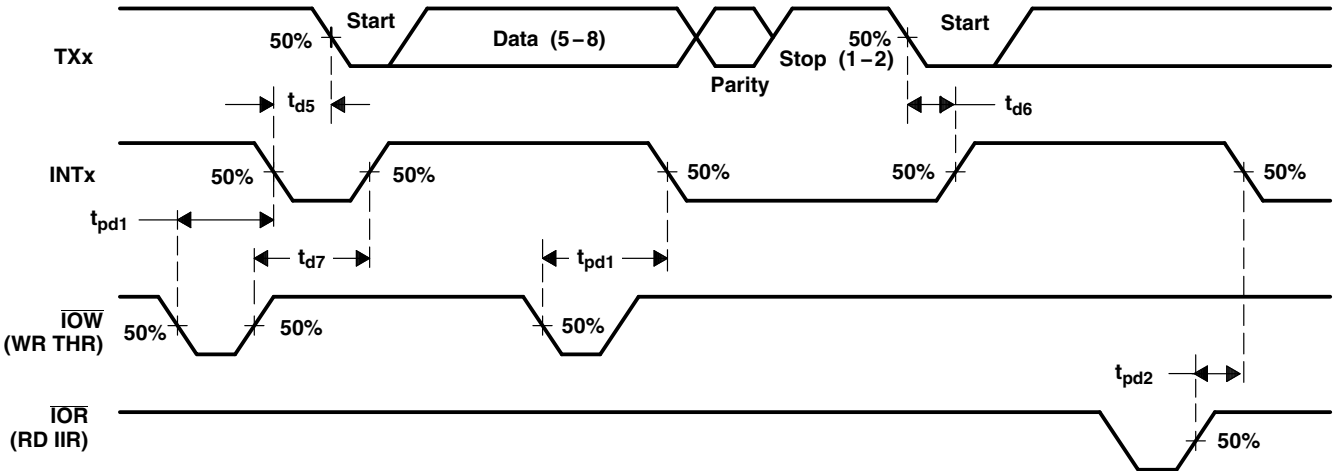

Figure 6. Transmitter Timing Waveforms

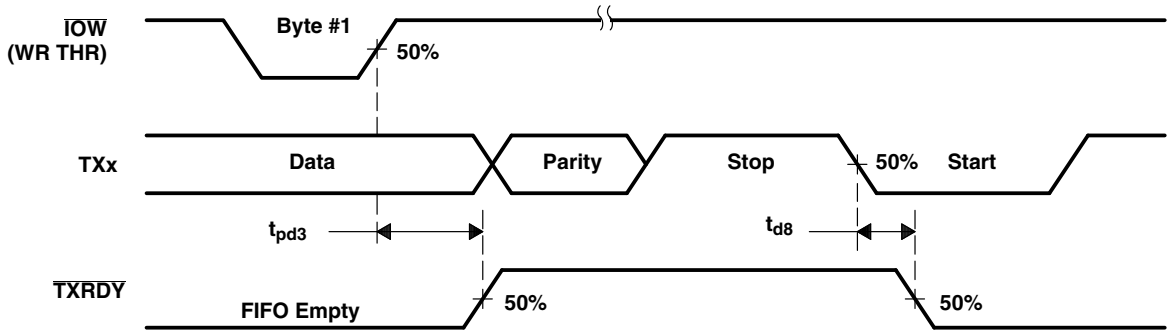

Figure 7. Transmitter Ready Mode 0 Timing Waveforms

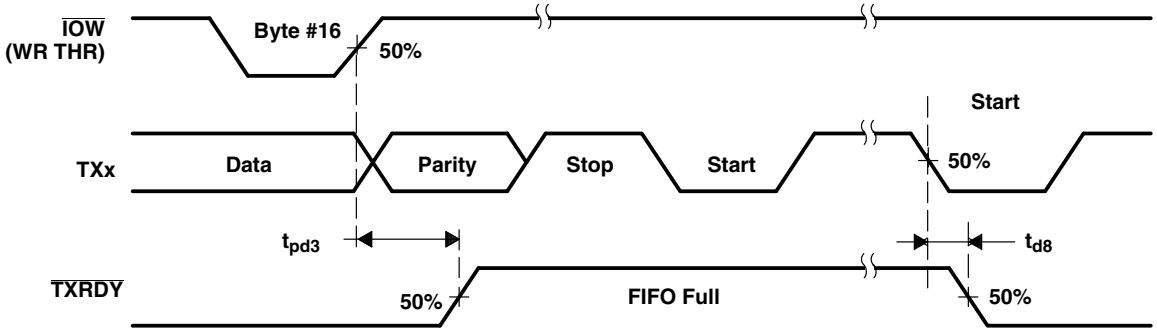

Figure 8. Transmitter Ready Mode 1 Timing Waveforms

PARAMETER MEASUREMENT INFORMATION

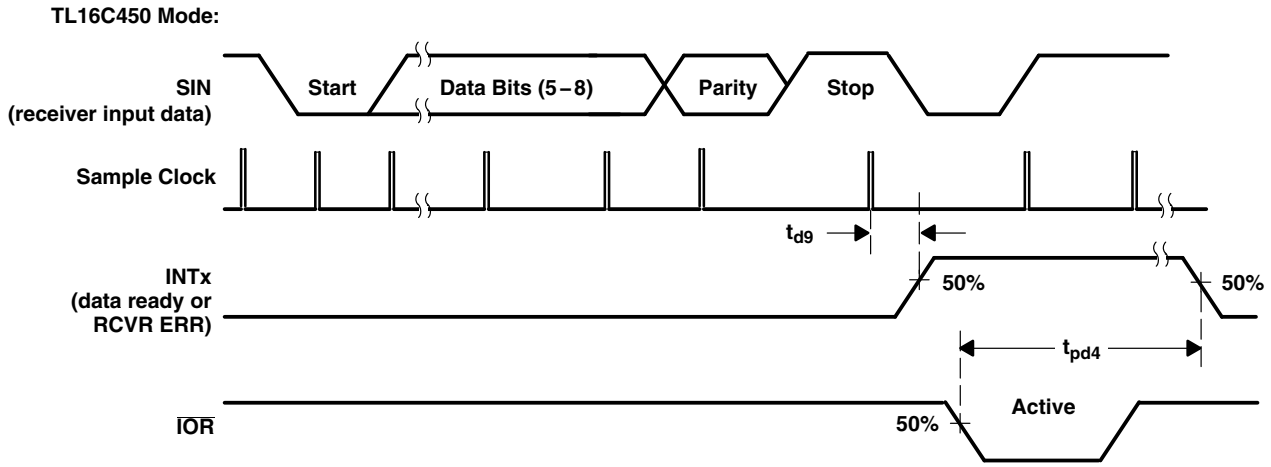

Figure 9. Receiver Timing Waveforms

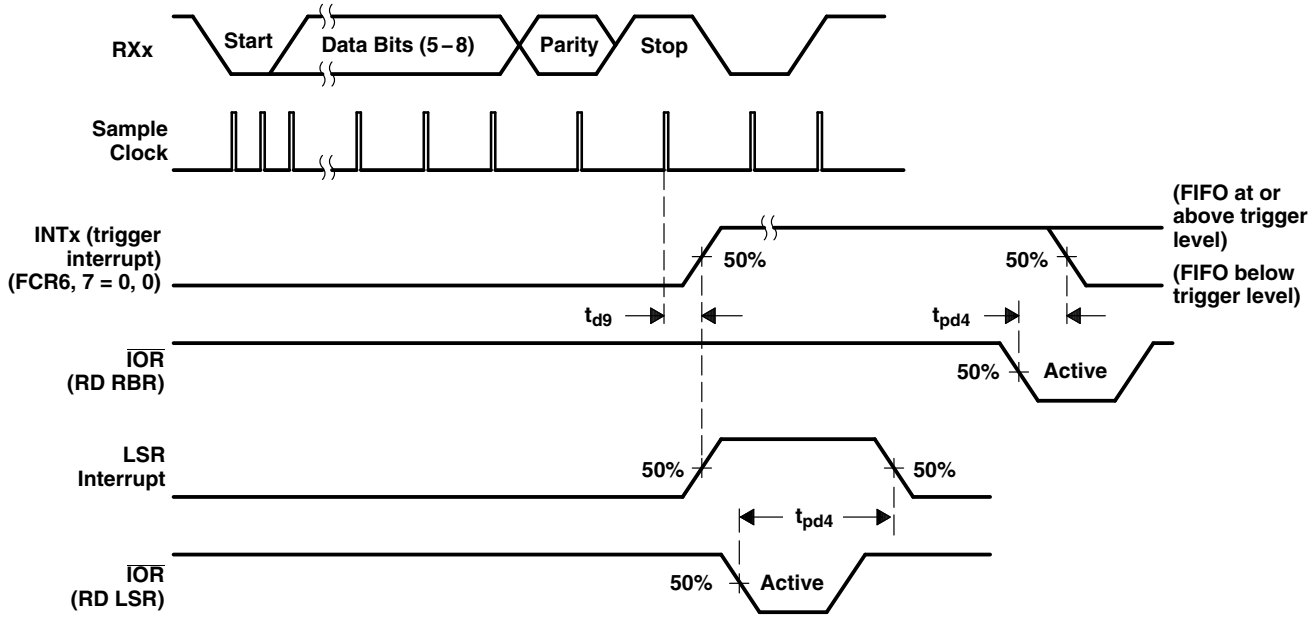

Figure 10. Receiver FIFO First Byte (Sets RDR) Waveforms

PARAMETER MEASUREMENT INFORMATION

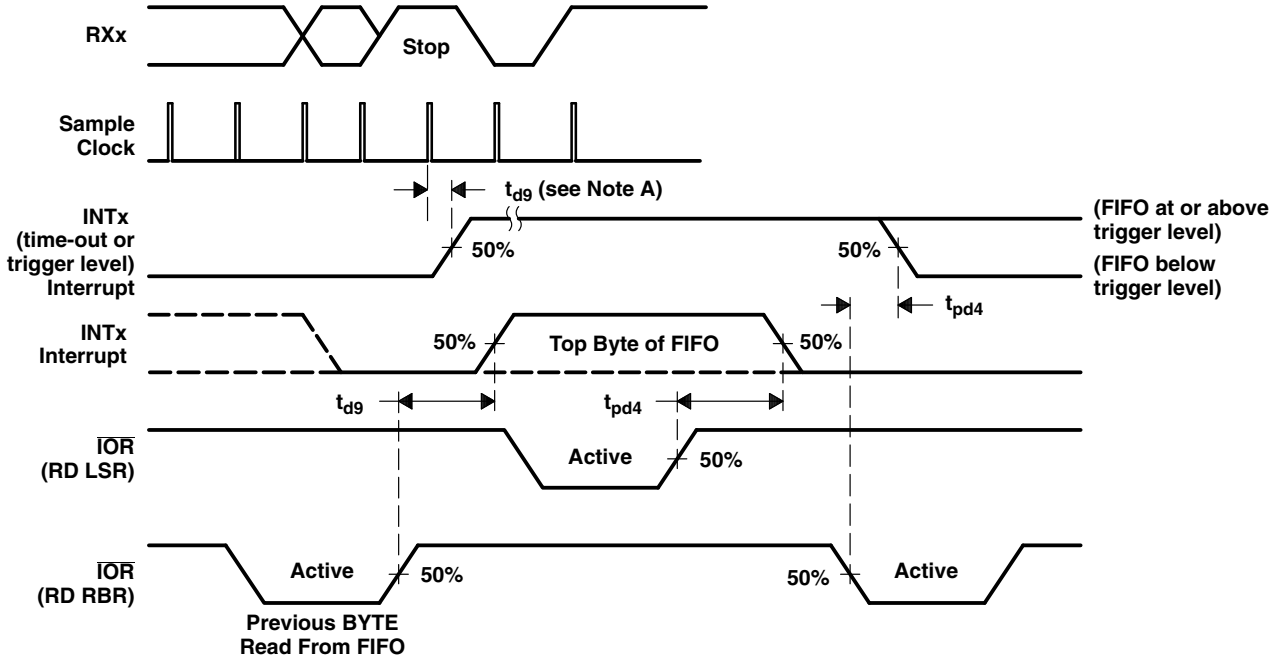

NOTE A: This is the reading of the last byte in the FIFO.

Figure 11. Receiver FIFO After First Byte (After RDR Set) Waveforms

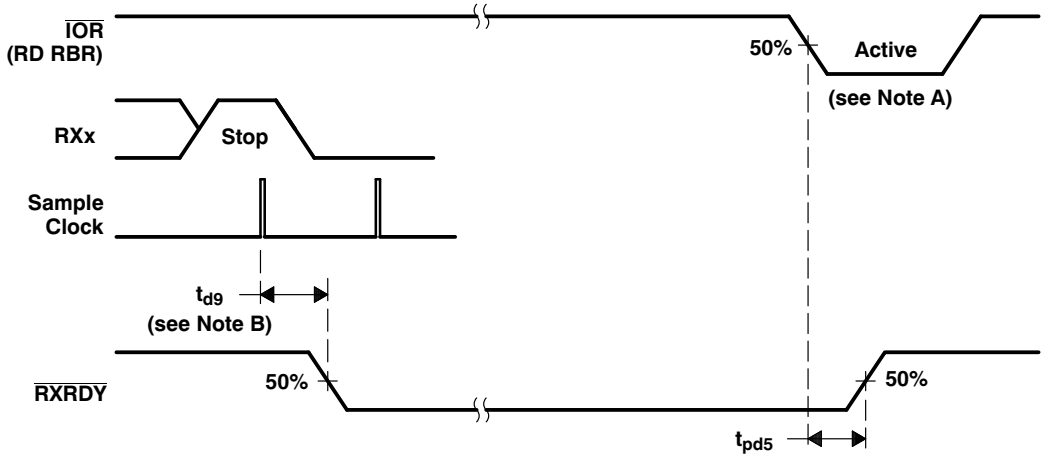

NOTES: A. This is the reading of the last byte in the FIFO.
B. If FCR0 = 1, then t_{d9} = 3 RCLK cycles. For a time-out interrupt, t_{d9} = 8 RCLK cycles.

Figure 12. Receiver Ready Mode 0 Timing Waveforms

PARAMETER MEASUREMENT INFORMATION

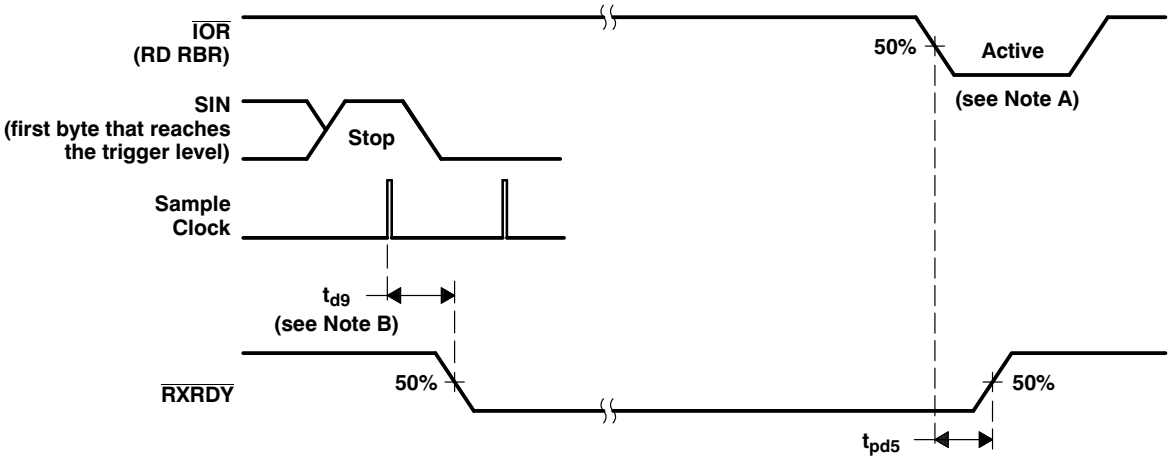

NOTES: A. This is the reading of the last byte in the FIFO.
B. If FCR0 = 1, t_{d9} = 3 RCLK cycles. For a trigger change level interrupt, t_{d9} = 8 RCLK.

Figure 13. Receiver Ready Mode 1 Timing Waveforms

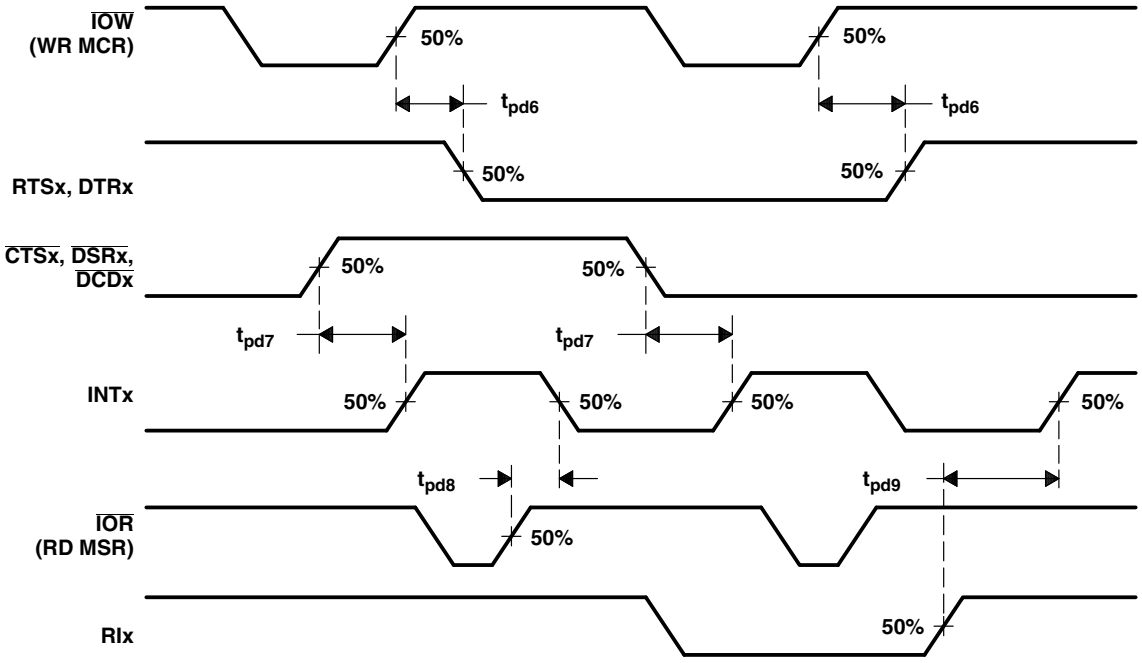

Figure 14. Modem Control Timing Waveforms

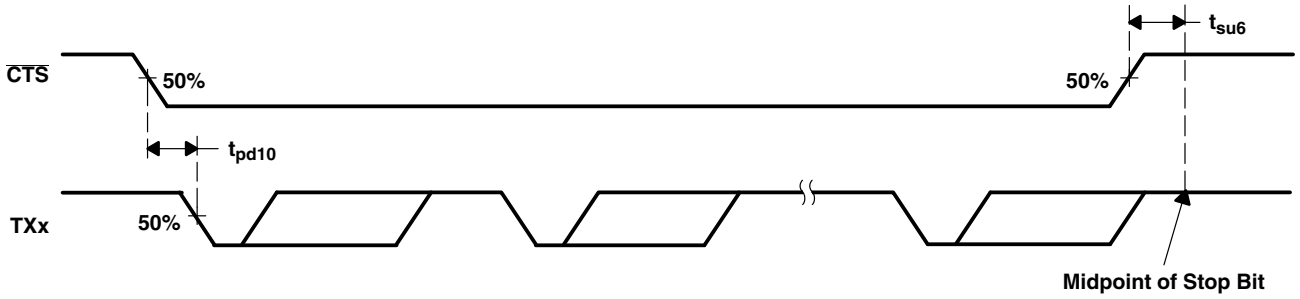

Figure 15. $\overline{CTS}$ and TX Autoflow Control Timing (Start and Stop) Waveforms

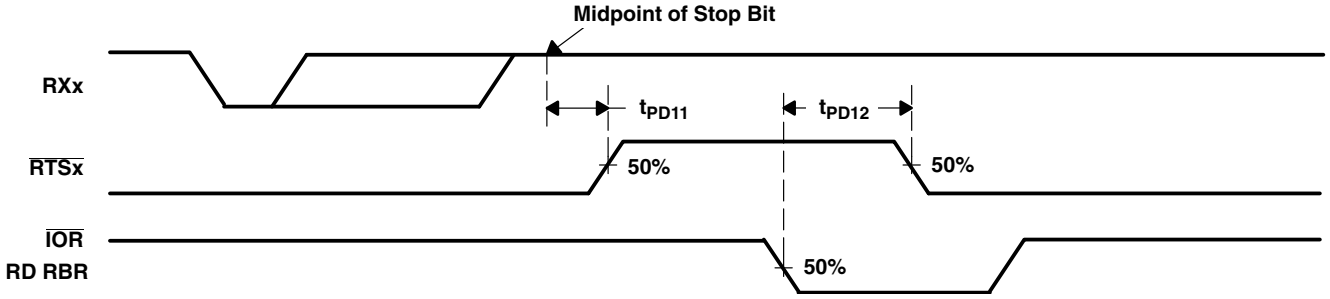

Figure 16. Auto-$\overline{RTS}$ Timing for RCV Threshold of 1, 4, or 8 Waveforms

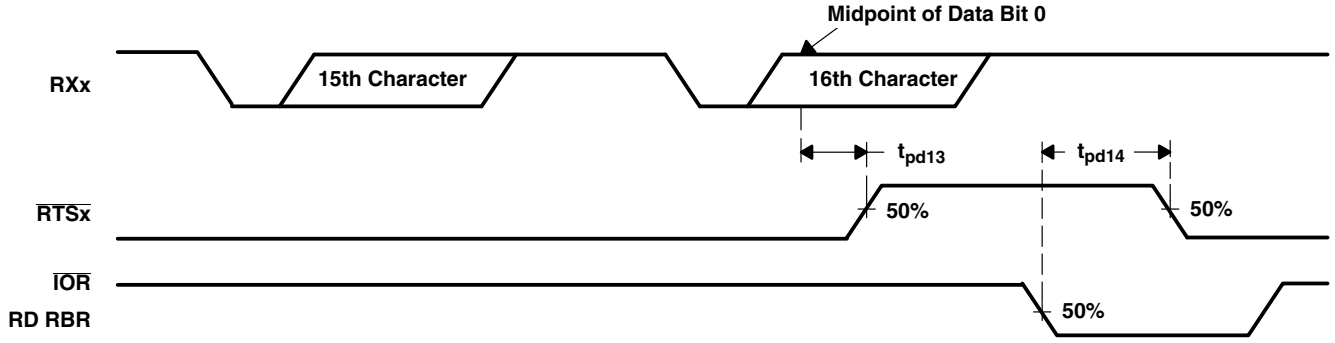

Figure 17. Auto-$\overline{RTS}$ Timing for RCV Threshold of 14 Waveforms

PRINCIPLES OF OPERATION

Three types of information are stored in the internal registers used in the ACE: control, status, and data. Mnemonic abbreviations for the registers are shown in Table 1. Table 2 defines the address location of each register and whether it is read only, write only, or read writable.

Table 1. Internal Register Mnemonic Abbreviations

CONTROL	MNEMONIC	STATUS	MNEMONIC	DATA	MNEMONIC
Line-control register	LCR	Line-status register	LSR	Receiver-buffer register	RBR
FIFO-control register	FCR	Modem-status register	MSR	Transmitter-holding register	THR
Modem-control register	MCR				
Divisor-latch LSB	DLL				
Divisor-latch MSB	DLM				
Interrupt enable register	IER				

Table 2. Register Selection†

DLAB‡	A2§	A1§	A0§	READ MODE	WRITE MODE
0	0	0	0	Receiver-buffer register	Transmitter-holding register
0	0	0	1		Interrupt-enable register
X	0	1	0	Interrupt-identification register	FIFO-control register
X	0	1	1		Line-control register
X	1	0	0		Modem-control register
X	1	0	1	Line-status register	
X	1	1	0	Modem-status register	
X	1	1	1	Scratchpad register	Scratchpad register
1	0	0	0		LSB divisor-latch
1	0	0	1		MSB divisor-latch

X = irrelevant, 0 = low level, 1 = high level
† The serial channel is accessed when either $\overline{CSA}$ or $\overline{CSD}$ is low.
‡ DLAB is the divisor-latch access bit, located in bit 7 of the LCR.
§ A2 – A0 are device terminals.

Individual bits within the registers with the bit number in parenthesis are referred to by the register mnemonic. For example, LCR7 refers to line-control register bit 7. The transmitter-buffer register and the receiver-buffer register are data registers that hold from five to eight bits of data. If less than eight data bits are transmitted, data is right-justified to the LSB. Bit 0 of a data word is always the first serial-data bit received and transmitted. The ACE data registers are double buffered (TL16450 mode) or FIFO buffered (FIFO mode) so that read and write operations can be performed when the ACE is performing the parallel-to-serial or serial-to-parallel conversion.

PRINCIPLES OF OPERATION

accessible registers

The system programmer, using the CPU, has access to and control over any of the ACE registers that are summarized in Table 1. These registers control ACE operations, receive data, and transmit data. Descriptions of these registers follow Table 3.

Table 3. Summary of Accessible Registers

ADDRESS	REGISTER MNEMONIC	REGISTER ADDRESS							
		BIT 7	BIT 6	BIT 5	BIT 4	BIT 3	BIT 2	BIT 1	BIT 0
0	RBR (read only)	Data Bit 7 (MSB)	Data Bit 6	Data Bit 5	Data Bit 4	Data Bit 3	Data Bit 2	Data Bit 1	Data Bit 0 (LSB)
0	THR (write only)	Data BIt 7	Data BIt 6	Data BIt 5	Data BIt 4	Data BIt 3	Data BIt 2	Data BIt 1	Data BIt 0
0†	DLL	Bit 7	Bit 6	Bit 5	Bit 4	Bit 3	Bit 2	Bit 1	Bit 0
1†	DLM	Bit 15	Bit 14	Bit 13	Bit 12	Bit 11	Bit 10	Bit 9	Bit 8
1	IER	0	0	0	0	(EDSSI) Enable modem status interrupt	(ERLSI) Enable receiver line status interrupt	(ETBEI) Enable transmitter holding register empty interrupt	(ERBI) Enable received data available interrupt
2	FCR (write only)	Receiver Trigger (MSB)	Receiver Trigger (LSB)	Reserved	Reserved	DMA mode select	Transmit FIFO reset	Receiver FIFO reset	FIFO Enable
2	IIR (read only)	FIFOs Enabled‡	FIFOs Enabled‡	0	0	Interrupt ID Bit (3)‡	Interrupt ID Bit (2)	Interrupt ID Bit (1)	0 If interrupt pending
3	LCR	(DLAB) Divisor latch access bit	Set break	Stick parity	(EPS) Even-parity select	(PEN) Parity enable	(STB) Number of stop bits	(WLSB1) Word-length select bit 1	(WLSB0) Word-length select bit 0
4	MCR	0	0	Autoflow control enable (AFE)	Loop	OUT2 Enable external interrupt (INT)	Reserved	(RTS) Request to send	(DTR) Data terminal ready
5	LSR	Error in receiver FIFO‡	(TEMT) Transmitter registers empty	(THRE) Transmitter holding register empty	(BI) Break interrupt	(FE) Framing error	(PE) Parity error	(OE) Overrun error	(DR) Data ready
6	MSR	(DCD) Data carrier detect	(RI) Ring indicator	(DSR) Data set ready	(CTS) Clear to send	(ΔDCD) Delta data carrier detect	(TERI) Trailing edge ring indicator	(ΔDSR) Delta data set ready	(ΔCTS) Delta clear to send
7	SCR	Bit 7	Bit 6	Bit 5	Bit 4	Bit 3	Bit 2	Bit 1	Bit 0

† DLAB = 1
‡ These bits are always 0 when FIFOs are disabled.

PRINCIPLES OF OPERATION

FIFO-control register (FCR)

The FCR is a write-only register at the same location as the IIR. It enables the FIFOs, sets the trigger level of the receiver FIFO, and selects the type of DMA signalling.

- Bit 0: FCR0 enables the transmit and receive FIFOs. All bytes in both FIFOs can be cleared by clearing FCR0. Data is cleared automatically from the FIFOs when changing from the FIFO mode to the TL16C450 mode (see FCR bit 0) and vice versa. Programming of other FCR bits is enabled by setting FCR0.
- Bit 1: When set, FCR1 clears all bytes in the receiver FIFO and resets its counter. This does not clear the shift register.
- Bit 2: When set, FCR2 clears all bytes in the transmit FIFO and resets the counter. This does not clear the shift register.
- Bit 3: When set, FCR3 changes $\overline{\text{RXRDY}}$ and $\overline{\text{TXRDY}}$ from mode 0 to mode 1 if FCR0 is set.
- Bits 4 and 5: FCR4 and FCR5 are reserved for future use.
- Bits 6 and 7: FCR6 and FCR7 set the trigger level for the receiver FIFO interrupt and the auto-$\overline{\text{RTS}}$ flow control (see Table 4).

Table 4. Receiver FIFO Trigger Level

BIT		RECEIVER FIFO TRIGGER LEVEL (BYTES)
7	6	
0	0	01
0	1	04
1	0	08
1	1	14

FIFO interrupt mode operation

The following receiver status occurs when the receiver FIFO and the receiver interrupts are enabled:

1. LSR0 is set when a character is transferred from the shift register to the receiver FIFO. When the FIFO is empty, it is reset.
2. IIR = 06 receiver line status interrupt has higher priority than the receive data available interrupt IIR = 04.
3. Receive data available interrupt is issued to the CPU when the programmed trigger level is reached by the FIFO. As soon as the FIFO drops below its programmed trigger level, it is cleared.
4. IIR = 04 (receive data available indicator) also occurs when the FIFO reaches its trigger level. It is cleared when the FIFO drops below the programmed trigger level.

PRINCIPLES OF OPERATION

FIFO interrupt mode operation (continued)

The following receiver FIFO character time-out status occurs when receiver FIFO and the receiver interrupts are enabled.

1. When the following conditions exist, a FIFO character time-out interrupt occurs:
   a. Minimum of one character in FIFO
   b. No new serial characters have been received for at least four character times. At 300 baud and 12-bit characters, the FIFO time-out interrupt causes a latency of 160 ms maximum from received character to interrupt generation.
   c. The receive FIFO has not been read for at least four character times.
2. By using the XTAL1 input for a clock signal, the character times can be calculated. The delay is proportional to the baud rate.
3. The time-out timer is reset after the CPU reads the receiver FIFO or after a new character is received. This occurs when there has been no time-out interrupt.
4. A time-out interrupt is cleared and the timer is reset when the CPU reads a character from the receiver FIFO.

Transmit interrupts occurs as follows when the transmitter and transmit FIFO interrupts are enabled (FCR0 =1, IER1 = 1).

1. When the transmitter FIFO is empty, the transmitter holding register interrupt (IIR = 02) occurs. The interrupt is cleared when the transmitter holding register is written to or the IIR is read. One to sixteen characters can be written to the transmit FIFO when servicing this interrupt.
2. The transmitter FIFO empty indicators are delayed one character time minus the last stop-bit time whenever the following occurs:

   THRE = 1, and there have not been at least two bytes in transmit FIFO since the last THRE = 1. The first transmitter interrupt comes immediately after changing FCR0, assuming the interrupt is enabled.

Receiver FIFO trigger level and character time-out interrupts have the same priority as the receive data available interrupt. The transmitter holding register empty interrupt has the same priority as the transmitter FIFO empty interrupt.

FIFO polled mode operation

When the FIFOs are enabled and all interrupts are disabled, the device is in the FIFO polled mode.

In the FIFO polled mode, there is no time-out condition indicated or trigger level reached. However, the receive and transmit FIFOs still have the capability of holding characters. The LSR must be read to determine the ACE status.

PRINCIPLES OF OPERATION

interrupt-enable register (IER)

The IER independently enables the four serial channel interrupt sources that activate the interrupt (INTA, B, C, D) output. All interrupts are disabled by clearing IER0 – IER3 of the IER. Interrupts are enabled by setting the appropriate bits of the IER. Disabling the interrupt system inhibits the IIR and the active (high) interrupt output. All other system functions operate in their normal manner, including the setting of the LSR and MSR. The contents of the IER are shown in Table 3 and described in the following bulleted list:

- Bit 0: When IER0 is set, IER0 enables the received data available interrupt and the timeout interrupts in the FIFO mode.
- Bit 1: When IER1 is set, the transmitter holding register empty interrupt is enabled.
- Bit 2: When IER2 is set, the receiver line status interrupt is enabled.
- Bit 3: When IER3 is set, the modem-status interrupt is enabled.
- Bits 4 – 7: IER4 – IER7. These four bits of the IER are cleared.

interrupt-identification register (IIR)

In order to minimize software overhead during data character transfers, the serial channel prioritizes interrupts into four levels as follows:

- Priority 1 – Receiver line status (highest priority)
- Priority 2 – Receiver data ready or receiver character timeout
- Priority 3 – Transmitter holding register empty
- Priority 4 – Modem status (lowest priority)

The IIR stores information indicating that a prioritized interrupt is pending and the type of interrupt. The IIR indicates the highest priority interrupt pending. The contents of the IIR are indicated in Table 5.

Table 5. Interrupt Control Functions

INTERRUPT IDENTIFICATION REGISTER				INTERRUPT SET AND RESET FUNCTIONS			
BIT 3	BIT 2	BIT 1	BIT 0	PRIORITY LEVEL	INTERRUPT TYPE	INTERRUPT SOURCE	INTERRUPT RESET CONTROL
0	0	0	1	—	None	None	—
0	1	1	0	First	Receiver line status	OE, PE, FE, or BI	LSR read
0	1	0	0	Second	Received data available	Receiver data available or trigger level reached	RBR read until FIFO drops below the trigger level
1	1	0	0	Second	Character time-out indicator	No characters have been removed from or input to the receiver FIFO during the last four character times, and there is at least one character in it during this time.	RBR read
0	0	1	0	Third	THRE	THRE	IIR read (if THRE is the interrupt source), or THR write
0	0	0	0	Fourth	Modem status	$\overline{CTS}$, $\overline{DSR}$, $\overline{RI}$, or $\overline{DCD}$	MSR read

PRINCIPLES OF OPERATION

interrupt-identification register (IIR) (continued)

- Bit 0: IIR0 indicates whether an interrupt is pending. When IIR0 is cleared, an interrupt is pending.
- Bits 1 and 2: IIR1 and IIR2 identify the highest priority interrupt pending as indicated in Table 5.
- Bit 3: IIR3 is always cleared in the TL16C450 mode. This bit, along with bit 2, is set when in the FIFO mode and a character time-out interrupt is pending.
- Bits 4 and 5: IIR4 and IIR5 are always cleared.
- Bits 6 and 7: IIR6 and IIR7 are set when FCR0 = 1.

line-control register (LCR)

The format of the data character is controlled by LCR. LCR may be read. Its contents are described in the following bulleted list and shown in Figure 18.

- Bits 0 and 1: LCR0 and LCR1 are word-length select bits. These bits program the number of bits in each serial character and are shown in Figure 18.
- Bit 2: LCR2 is the stop-bit select bit. This bit specifies the number of stop bits in each transmitted character. The receiver always checks for one stop bit.
- Bit 3: LCR3 is the parity-enable bit. When LCR3 is set, a parity bit between the last data word bit and the stop bit is generated and checked.
- Bit 4: LCR4 is the even-parity select bit. When this bit is set and parity is enabled (LCR3 is set), even parity is selected. When this bit is cleared and parity is enabled, odd parity is selected.
- Bit 5: LCR5 is the stick-parity bit. When parity is enabled (LCR3 is set) and this bit is set, the transmission and reception of a parity bit is placed in the opposite state from the value of LCR4. This forces parity to a known state and allows the receiver to check the parity bit in a known state.
- Bit 6: LCR6 is a break-control bit. When this bit is set, the serial outputs TXx are forced to the spacing state (low). The break-control bit acts only on the serial output and does not affect the transmitter logic. If the following sequence is used, no invalid characters are transmitted because of the break.

  Step 1. Load a zero byte in response to the transmitter holding register empty (THRE) status indicator.

  Step 2. Set the break in response to the next THRE status indicator.

  Step 3. Wait for the transmitter to be idle when transmitter empty status signal is set (TEMT = 1); then clear the break when the normal transmission has to be restored.
- Bit 7: LCR7 is the divisor-latch access bit (DLAB) bit. This bit must be set to access the divisor latches DLL and DLM of the baud-rate generator during a read or write operation. LCR7 must be cleared to access the receiver-buffer register, the transmitter-holding register, or the interrupt-enable register.

PRINCIPLES OF OPERATION

line-control register (LCR) (continued)

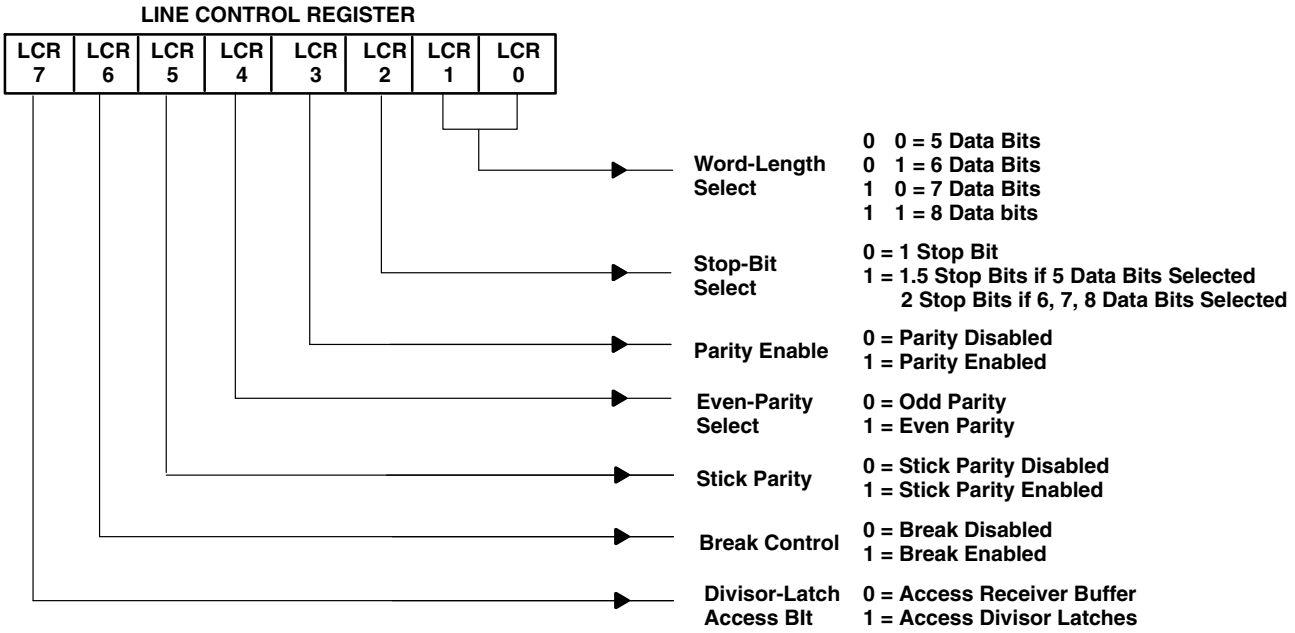

Figure 18. Line-Control Register Contents

line-status register (LSR)

The LSR is a single register that provides status indicators. The LSR shown in Table 6 is described in the following bulleted list:

- Bit 0: LSR0 is the data ready (DR) bit. Data ready is set when an incoming character is received and transferred to the receiver-buffer register or to the FIFO. LSR0 is cleared by a CPU read of the data in the receiver-buffer register or in the FIFO.
- Bit 1: LSR1 is the overrun error (OE) bit. An overrun error indicates that data in the receiver-buffer register is not read by the CPU before the next character is transferred to the receiver-buffer register, therefore overwriting the previous character. The OE indicator is cleared whenever the CPU reads the contents of the LSR. An overrun error occurs in the FIFO mode after the FIFO is full and the next character is completely received. The overrun error is detected by the CPU on the first LSR read after it occurs. The character in the shift register is not transferred to the FIFO, but it is overwritten.
- Bit 2: LSR2 is the parity error (PE) bit. A parity error indicates that the received data character does not have the correct parity as selected by LCR3 and LCR4. The PE bit is set upon detection of a parity error and is cleared when the CPU reads the contents of the LSR. In the FIFO mode, the parity error is associated with a particular character in the FIFO. LSR2 reflects the error when the character is at the top of the FIFO.
- Bit 3: LSR3 is the framing error (FE) bit. A framing error indicates that the received character does not have a valid stop bit. LSR3 is set when the stop bit following the last data bit or parity bit is detected as a zero bit (spacing level). The FE indicator is cleared when the CPU reads the contents of the LSR. In the FIFO mode, the framing error is associated with a particular character in the FIFO. LSR3 reflects the error when the character is at the top of the FIFO.

PRINCIPLES OF OPERATION

line-status register (LSR) (continued)

- Bit 4: LSR4 is the break interrupt (BI) bit. Break interrupt is set when the received data input is held in the spacing (low) state for longer than a full word transmission time (start bit + data bits + parity + stop bits). The BI indicator is cleared when the CPU reads the contents of the LSR. In the FIFO mode, this is associated with a particular character in the FIFO. LSR2 reflects the BI when the break character is at the top of the FIFO. The error is detected by the CPU when its associated character is at the top of the FIFO during the first LSR read. Only one zero character is loaded into the FIFO when BI occurs.

LSR1 – LSR4 are the error conditions that produce a receiver line status interrupt (priority 1 interrupt in the interrupt-identification register) when any of the conditions are detected. This interrupt is enabled by setting IER2 in the interrupt-enable register.

- Bit 5: LSR5 is the transmitter holding register empty (THRE) bit. THRE indicates that the ACE is ready to accept a new character for transmission. The THRE bit is set when a character is transferred from the transmitter holding register (THR) to the transmitter shift register (TSR). LSR5 is cleared when the CPU loads THR. LSR5 is not cleared by a CPU read of the LSR. In the FIFO mode, this bit is set when the transmit FIFO is empty, and it is cleared when one byte is written to the transmit FIFO. When the THRE interrupt is enabled by IER1, THRE causes a priority 3 interrupt in the IIR. If THRE is the interrupt source indicated by IIR, INTRPT is cleared by a read of the IIR.
- Bit 6: LSR6 is the transmitter register empty (TEMT) bit. TEMT is set when both THR and TSR are empty. LSR6 is cleared when a character is loaded into THR, and remains low until the character is transferred out of TXx. TEMT is not cleared by a CPU read of the LSR. In the FIFO mode, this bit is set when both the transmitter FIFO and shift register are empty.
- Bit 7: LSR7 is the receiver FIFO error bit. The LSR7 bit is cleared in the TL16C450 mode (see FCR bit 0). In the FIFO mode, it is set when at least one of the following data errors is in the FIFO: parity error, framing error, or break interrupt indicator. It is cleared when the CPU reads the LSR, unless there are subsequent errors in the FIFO.

NOTE

The LSR may be written. However, this function is intended only for factory test. It should be considered as read only by applications software.

Table 6. Line-Status Register BIts

LSR BITS	1	0
LSR0 data ready (DR)	Ready	Not ready
LSR1 overrun error (OE)	Error	No error
LSR2 parity error (PE)	Error	No error
LSR3 framing error (FE)	Error	No error
LSR4 break interrupt (BI)	Break	No break
LSR5 transmitter holding register empty (THRE)	Empty	Not empty
LSR6 transmitter register empty (TEMT)	Empty	Not empty
LSR7 receiver FIFO error	Error in FIFO	No error in FIFO

PRINCIPLES OF OPERATION

modem-control register (MCR)

The MCR controls the interface with the modem or data set as described in Figure 19. The MCR can be written and read. Outputs $\overline{RTS}$ and $\overline{DTR}$ are directly controlled by their control bits in this register. A high input asserts a low signal (active) at the output terminals. MCR bits 0, 1, 2, 3, and 4 are shown as follows:

- Bit 0: When MCR0 is set, the $\overline{DTR}$ output is forced low. When MCR0 is cleared, the $\overline{DTR}$ output is forced high. The $\overline{DTR}$ output of the serial channel may be input into an inverting line driver in order to obtain the proper polarity input at the modem or data set.
- Bit1: When MCR1 is set, the $\overline{RTS}$ output is forced low. When MCR1 is cleared, the $\overline{RTS}$ output is forced high. The $\overline{RTS}$ output of the serial channel may be input into an inverting line driver to obtain the proper polarity input at the modem or data set.
- Bit 2: MCR2 has no effect on operation.
- Bit 3: When MCR3 is set, the external serial channel interrupt is enabled.
- Bit 4: MCR4 provides a local loopback feature for diagnostic testing of the channel. When MCR4 is set, serial output TXx is set to the marking (high) state and SIN is disconnected. The output of the TSR is looped back into the RSR input. The four modem control inputs ($\overline{CTS}$, $\overline{DSR}$, $\overline{DCD}$, and $\overline{RI}$) are disconnected. The four modem control output bits (DTR, RTS, OUT1, and OUT2) are internally connected to the four modem control input bits (DSR, CTS, RI, and DCD), respectively. The modem control output terminals are forced to their inactive (high) state. In the diagnostic mode, data transmitted is received by its own receiver. This allows the processor to verify the transmit and receive data paths of the selected serial channel. Interrupt control is fully operational; however, modem-status interrupts are generated by controlling the lower four MCR bits internally. Interrupts are not generated by activity on the external terminals represented by those four bits.
- Bit 5: This bit is the autoflow control enable (AFE). When set, the autoflow control is enabled, as described in the detailed description.

  The ACE flow control can be configured by programming bits 1 and 5 of the MCR, as shown in Table 7.

Table 7. ACE Flow Configuration

MSR BIT 5 (AFE)	MSR BIT 1 (RTS)	ACE FLOW CONFIGURATION
1	1	Auto-$\overline{RTS}$ and auto-$\overline{CTS}$ enabled (autoflow control enabled)
1	0	Auto-$\overline{CTS}$ only enabled
0	X	Auto-$\overline{RTS}$ and auto-$\overline{CTS}$ disabled

modem-control register (MCR) (continued)

- Bit 6 – Bit 7: MCR5, MCR6, and MCR7 are permanently cleared.

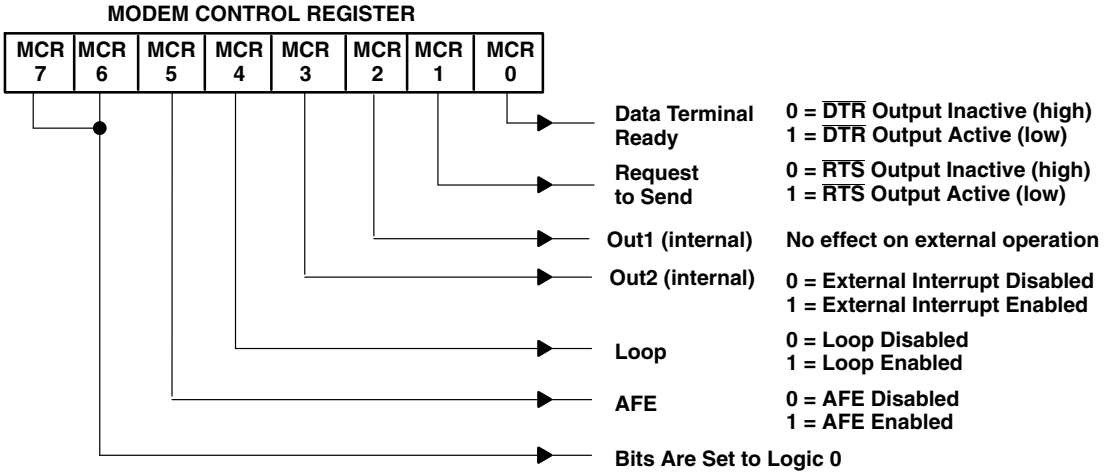

Figure 19. Modem-Control Register Contents

modem-status register (MSR)

The MSR provides the CPU with status of the modem input lines for the modem or peripheral devices. The MSR allows the CPU to read the serial channel modem signal inputs by accessing the data bus interface of the ACE. It also reads the current status of four bits of the MSR that indicate whether the modem inputs have changed since the last reading of the MSR. The delta status bits are set when a control input from the modem changes states, and are cleared when the CPU reads the MSR.

The modem input lines are $\overline{CTS}$, $\overline{DSR}$, $\overline{RI}$, and $\overline{DCD}$. MSR4 – MSR7 are status indicators of these lines. A status bit = 1 indicates the input is low. When the status bit is cleared, the input is high. When the modem-status interrupt in the IER is enabled (IIR3 is set), an interrupt is generated whenever any one of MSR0 – MSR3 is set, except as noted below in the delta $\overline{CTS}$ description. The MSR is a priority 4 interrupt. The contents of the MSR are described in Table 8.

- Bit 0: MSR0 is the delta clear-to-send (ΔCTS) bit. ΔCTS indicates that the $\overline{CTS}$ input to the serial channel has changed state since it was last read by the CPU. No interrupt will be generated if auto-$\overline{CTS}$ mode is enabled.
- Bit 1: MSR1 is the delta data set ready (ΔDSR) bit. ΔDSR indicates that the $\overline{DSR}$ input to the serial channel has changed states since the last time it was read by the CPU.
- Bit 2: MSR2 is the trailing edge of ring indicator (TERI) bit. TERI indicates that the $\overline{RI}$ input to the serial channel has changed states from low to high since the last time it was read by the CPU. High-to-low transitions on RI do not activate TERI.
- Bit 3: MSR3 is the delta data carrier detect (ΔDCD) bit. ΔDCD indicates that the $\overline{DCD}$ input to the serial channel has changed states since the last time it was read by the CPU.
- Bit 4: MSR4 is the clear-to-send (CTS) bit. CTS is the complement of the $\overline{CTS}$ input from the modem indicating to the serial channel that the modem is ready to receive data from SOUT. When the serial channel is in the loop mode (MCR4 = 1), MSR4 reflects the value of RTS in the MCR.
- Bit 5: MSR5 is the data set ready DSR bit. DSR is the complement of the $\overline{DSR}$ input from the modem to the serial channel that indicates that the modem is ready to provide received data from the serial channel receiver circuitry. When the channel is in the loop mode (MCR4 is set), MSR5 reflects the value of DTR in the MCR.

PRINCIPLES OF OPERATION

modem-status register (MSR) (continued)

- Bit 6: MSR6 is the ring indicator (RI) bit. RI is the complement of the $\overline{RIx}$ inputs. When the channel is in the loop mode (MCR4 is set), MSR6 reflects the value of OUT1 in the MCR.
- Bit 7: MSR7 is the data carrier detect (DCD) bit. Data carrier detect indicates the status of the data carrier detect ($\overline{DCD}$) input. When the channel is in the loop mode (MCR4 is set), MSR7 reflects the value of OUT2 in the MCR.

Reading the MSR clears the delta modem status indicators but has no effect on the other status bits. For LSR and MSR, the setting of status bits is inhibited during status register read operations. If a status condition is generated during a read $\overline{IOR}$ operation, the status bit is not set until the trailing edge of the read. When a status bit is set during a read operation and the same status condition occurs, that status bit is cleared at the trailing edge of the read instead of being set again. In the loopback mode, $\overline{CTS}$, $\overline{DSR}$, $\overline{RI}$, and $\overline{DCD}$ inputs are ignored when modem-status interrupts are enabled; however, a modem-status interrupt can still be generated by writing to MCR3 – MCR0. Applications software should not write to the MSR.

Table 8. Modem-Status Register BIts

MSR BIT	MNEMONIC	DESCRIPTION
MSR0	ΔCTS	Delta clear to send
MSR1	ΔDSR	Delta data set ready
MSR2	TERI	Trailing edge of ring indicator
MSR3	ΔDCD	Delta data carrier detect
MSR4	CTS	Clear to send
MSR5	DSR	Data set ready
MSR6	RI	Ring indicator
MSR7	DCD	Data carrier detect

programming

The serial channel of the ACE is programmed by control registers LCR, IER, DLL, DLM, MCR, and FCR. These control words define the character length, number of stop bits, parity, baud rate, and modem interface.

While the control registers can be written in any order, the IER should be written last because it controls the interrupt enables. Once the serial channel is programmed and operational, these registers can be updated any time the ACE serial channel is not transmitting or receiving data.

programmable baud-rate generator

The ACE serial channel contains a programmable baud-rate generator (BRG) that divides the clock (dc to 8 MHz) by any divisor from 1 to $2^{16}-1$. Two 8-bit divisor-latch registers store the divisor in a 16-bit binary format. These divisor-latch registers must be loaded during initialization. A 16-bit baud counter is immediately loaded upon loading of either of the divisor latches. This prevents long counts on initial load. The BRG can use any of three different popular frequencies to provide standard baud rates. These frequencies are 1.8432 MHz, 3.072 MHz, 8 MHz, and 16 MHz. With these frequencies, standard bit rates from 50 kbps to 512 kbps are available. Tables 9, 10, 11, and 12 illustrate the divisors needed to obtain standard rates using these three frequencies. The output frequency of the baud-rate generator is 16 times the data rate [divisor # = clock + (baud rate × 16)]. RCLK runs at this frequency.

PRINCIPLES OF OPERATION

programmable baud-rate generator (continued)

Table 9. Baud Rates Using a 1.8432-MHz Crystal

BAUD RATE DESIRED	DIVISOR (N) USED TO GENERATE 16× CLOCK	PERCENT ERROR DIFFERENCE BETWEEN DESIRED AND ACTUAL
50	2304	—
75	1536	—
110	1047	0.026
134.5	857	0.058
150	768	—
300	384	—
600	192	—
1200	96	—
1800	64	—
2000	58	0.690
2400	48	—
3600	32	—
4800	24	—
7200	16	—
9600	12	—
19200	6	—
38400	3	—
56000	2	2.860

Table 10. Baud Rates Using a 3.072-MHz Crystal

BAUD RATE DESIRED	DIVISOR (N) USED TO GENERATE 16× CLOCK	PERCENT ERROR DIFFERENCE BETWEEN DESIRED AND ACTUAL
50	3840	—
75	2560	—
110	1745	0.026
134.5	1428	0.034
150	1280	—
300	640	—
600	320	—
1200	160	—
1800	107	0.312
2000	96	—
2400	80	—
3600	53	0.628
4800	40	—
7200	27	1.230
9600	20	—
19200	10	—
38400	5	—

PRINCIPLES OF OPERATION

programmable baud-rate generator (continued)

Table 11. Baud Rates Using an 8-MHz Clock

BAUD RATE DESIRED	DIVISOR (N) USED TO GENERATE 16× CLOCK	PERCENT ERROR DIFFERENCE BETWEEN DESIRED AND ACTUAL
50	10000	—
75	6667	0.005
110	4545	0.010
134.5	3717	0.013
150	333	0.010
300	1667	0.020
600	883	0.040
1200	417	0.080
1800	277	0.080
2000	250	—
2400	208	0.160
3600	139	0.080
4800	104	0.160
7200	69	0.644
9600	52	0.160
19200	26	0.160
38400	13	0.160
56000	9	0.790
128000	4	2.344
256000	2	2.344
512000	1	2.400

Table 12. Baud Rates Using an 16-MHz Clock

BAUD RATE DESIRED	DIVISOR (N) USED TO GENERATE 16× CLOCK	PERCENT ERROR DIFFERENCE BETWEEN DESIRED AND ACTUAL
50	20000	0
75	13334	0.00
110	9090	0.01
134.5	7434	0.01
150	6666	0.01
300	3334	–0.02
600	1666	0.04
1200	834	–0.08
1800	554	0.28
2000	500	0.00
2400	416	0.16
3600	278	–0.08
4800	208	0.16
7200	138	0.64
9600	104	0.16
19200	52	0.16
38400	26	0.16
56000	18	–0.79
128000	8	–2.34
256000	4	–2.34
512000	2	–2.34
1000000	1	0.00

receiver

Serial asynchronous data is input into the RXx terminal. The ACE continually searches for a high-to-low transition. When the transition is detected, a circuit is enabled to sample incoming data bits at the optimum point, which is the center of each bit. The start bit is valid when RXx is still low at the sample point. Verifying the start bits prevents the receiver from assembling a false data character due to a low-going noise spike on the RXx input.

The number of data bits in a character is controlled by LCR0 and LCR1. Parity checking, generation, and polarity are controlled by LCR3 and LCR4. Receiver status is provided in the LSR. When a full character is received, including parity and stop bits, the data received indicator in LSR0 is set. In non-FIFO mode, the CPU reads the RBR, which clears LSR0. If the character is not read prior to a new character transfer from RSR to RBR, an overrun occurs and the overrun error status indicator is set in LSR1. If there is a parity error, the parity error is set in LSR2. If a stop bit is not detected, a framing error indicator is set in LSR3.

In the FIFO mode, the data character and the associated error bits are stored in the receiver FIFO. If the data in RXx is a symmetrical square wave, the center of the data cells occurs within ±3.125% of the actual center, providing an error margin of 46.875%. The start bit can begin as much as one 16× clock cycles prior to being detected.

PRINCIPLES OF OPERATION

autoflow control (see Figure 20)

Autoflow control is comprised of auto-$\overline{CTS}$ and auto-$\overline{RTS}$. With auto-$\overline{CTS}$, the $\overline{CTS}$ input must be active before the transmitter FIFO can send data. With auto-$\overline{RTS}$, $\overline{RTS}$ becomes active when the receiver can handle more data and notifies the sending serial device. When $\overline{RTS}$ is connected to $\overline{CTS}$, data transmission does not occur unless the receiver FIFO has space for the data; thus, overrun errors are eliminated using ACE1 and ACE2 from a TL16C554A with the autoflow control enabled. Otherwise, overrun errors may occur when the transmit-data rate exceeds the receiver FIFO read latency.

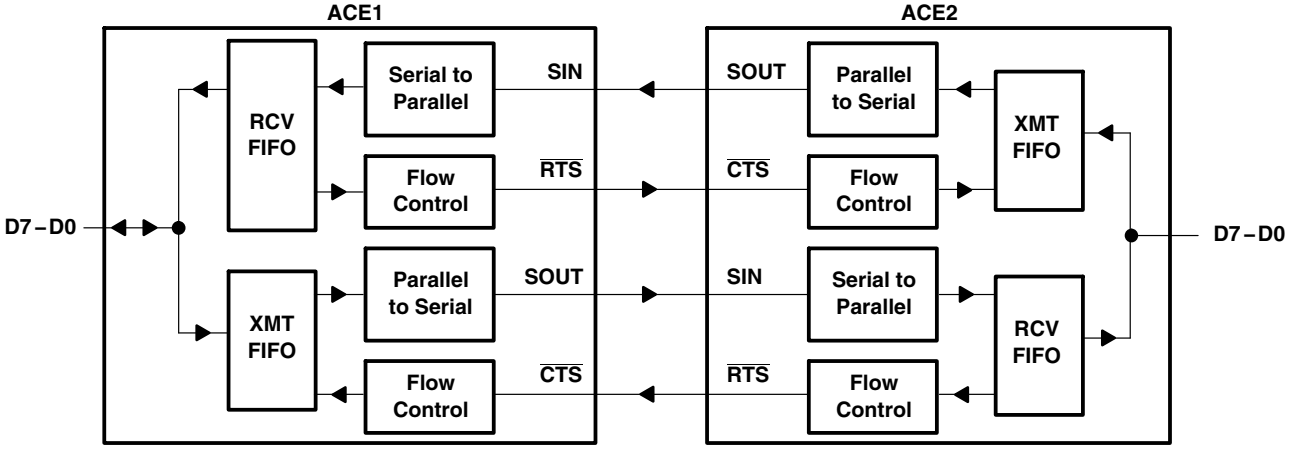

Figure 20. Autoflow Control (Auto-$\overline{RTS}$ and Auto-$\overline{CTS}$) Example

auto-$\overline{RTS}$ (see Figure 20)

Auto-$\overline{RTS}$ data flow control originates in the receiver timing and control block (see functional block diagram) and is linked to the programmed receiver FIFO trigger level. When the receiver FIFO level reaches a trigger level of 1, 4, or 8 (see Figure 22) $\overline{RTS}$ is deasserted. With trigger levels of 1, 4, and 8, the sending ACE may send an additional byte after the trigger level is reached (assuming the sending ACE has another byte to send) because it may not recognize the deassertion of $\overline{RTS}$ until after it has begun sending the additional byte. $\overline{RTS}$ is automatically reasserted once the RCV FIFO is emptied by reading the receiver-buffer register.

When the trigger level is 14 (see Figure 23), $\overline{RTS}$ is deasserted after the first data bit of the 16th character is present on the SIN line. $\overline{RTS}$ is reasserted when the RCV FIFO has at least one available byte space.

auto-$\overline{CTS}$ (see Figure 20)

The transmitter circuitry checks $\overline{CTS}$ before sending the next data byte. When $\overline{CTS}$ is active, it sends the next byte. To stop the transmitter from sending the following byte, $\overline{CTS}$ must be released before the middle of the last stop bit currently being sent (see Figure 21). The auto-$\overline{CTS}$ function reduces interrupts to the host system. When flow control is enabled, $\overline{CTS}$ level changes do not trigger host interrupts because the device automatically controls its own transmitter. Without auto-$\overline{CTS}$ the transmitter sends any data present in the transmit FIFO and a receiver overrun error may result.

enabling autoflow control and auto-$\overline{CTS}$

Autoflow control is enabled by setting modem-control register bits 5 (autoflow enable or AFE) and 1 (RTS) to a 1. Autoflow incorporates both auto-$\overline{RTS}$ and auto-$\overline{CTS}$. When only auto-$\overline{CTS}$ is desired, bit 1 in the modem-control register should be cleared (this assumes that an external control signal is driving $\overline{CTS}$).

PRINCIPLES OF OPERATION

auto-$\overline{CTS}$ and auto-$\overline{RTS}$ functional timing

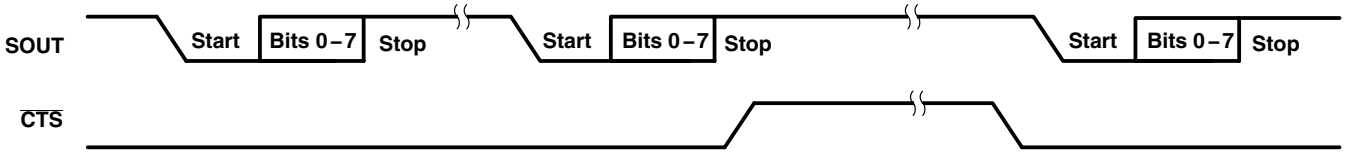

NOTES: A. When $\overline{CTS}$ is low, the transmitter keeps sending serial data out.
B. If $\overline{CTS}$ goes high before the middle of the last stop bit of the current byte, the transmitter finishes sending the current byte but it does not send the next byte.
C. When $\overline{CTS}$ goes from high to low, the transmitter begins sending data again.

Figure 21. $\overline{CTS}$ Functional Timing Waveforms

The receiver FIFO trigger level can be set to 1, 4, 8, or 14 bytes. These are described in Figures 3 and 4.

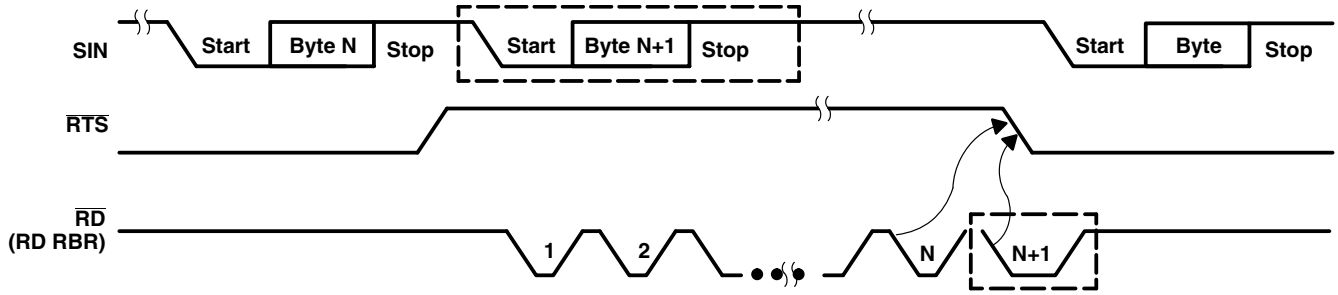

NOTES: A. N = RCV FIFO trigger level (1, 4, or 8 bytes)
B. The two blocks in dashed lines cover the case where an additional byte is sent as described in the preceding auto-$\overline{RTS}$ section.

Figure 22. $\overline{RTS}$ Functional Timing Waveforms, RCV FIFO Trigger Level = 1, 4, or 8 Bytes

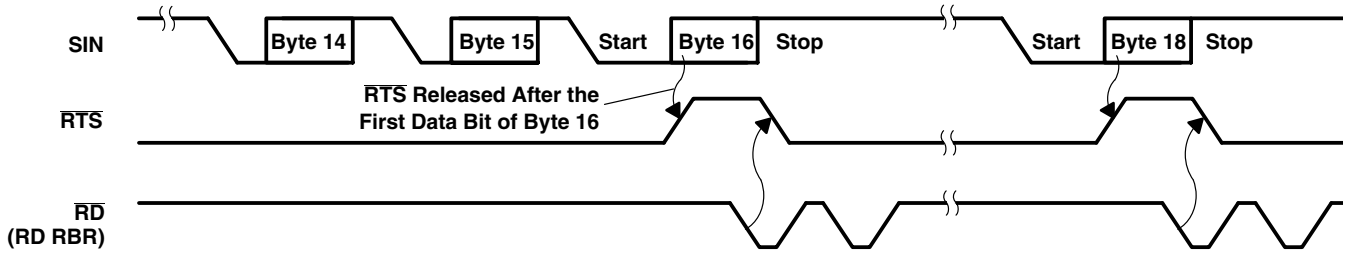

NOTES: A. $\overline{RTS}$ is deasserted when the receiver receives the first data bit of the sixteenth byte. The receive FIFO is full after finishing the sixteenth byte.
B. $\overline{RTS}$ is asserted again when there is at least one byte of space available and no incoming byte is in processing or there is more than one byte of space available.
C. When the receive FIFO is full, the first receive buffer register read reasserts $\overline{RTS}$.

Figure 23. $\overline{RTS}$ Functional Timing Waveforms, RCV FIFO Trigger Level = 14 Bytes

PRINCIPLES OF OPERATION

reset

After power up, the ACE RESET input should be held high for one microsecond to reset the ACE circuits to an idle mode until initialization. A high on RESET causes the following:

1. Initializes the transmitter and receiver internal clock counters.
2. Clears the LSR, except for transmitter register empty (TEMT) and transmit holding register empty (THRE), which are set. The MCR is also cleared. All of the discrete lines, memory elements, and miscellaneous logic associated with these register bits are also cleared or turned off. The LCR, divisor latches, RBR, and transmitter-buffer register are not affected.

$\overline{\text{RXRDY}}$ operation

In mode 0, $\overline{\text{RXRDY}}$ is asserted (low) when the receive FIFO is not empty; it is released (high) when the FIFO is empty. In this way, the receiver FIFO is read when $\overline{\text{RXRDY}}$ is asserted (low).

In mode 1, $\overline{\text{RXRDY}}$ is asserted (low) when the receive FIFO has filled to the trigger level or a character time-out has occurred (four character times with no transmission of characters); it is released (high) when the FIFO is empty. In this mode, many received characters are read by the DMA device, reducing the number of times it is interrupted.

$\overline{\text{RXRDY}}$ and $\overline{\text{TXRDY}}$ outputs from each of the four internal ACEs of the TL16C554A are ANDed together internally. This combined signal is brought out externally to $\overline{\text{RXRDY}}$ and $\overline{\text{TXRDY}}$.

Following the removal of the reset condition (RESET low), the ACE remains in the idle mode until programmed. A hardware reset of the ACE sets the THRE and TEMT status bits in the LSR. When interrupts are subsequently enabled, an interrupt occurs due to THRE. A summary of the effect of a reset on the ACE is given in Table 13.

Table 13. RESET Effects on Registers and Signals

REGISTER/SIGNAL	RESET CONTROL	RESET STATE
Interrupt-enable register	Reset	All bits cleared (0 – 3 forced and 4 – 7 permanent)
Interrupt-identification register	Reset	Bit 0 is set, bits 1, 2, 3, 6, and 7 are cleared, Bits 4 – 5 are permanently cleared
Line-control register	Reset	All bits cleared
Modem-control register	Reset	All bits cleared (5 – 7 permanent)
FIFO-control register	Reset	All bits cleared
Line-status register	Reset	All bits cleared, except bits 5 and 6 are set
Modem-status register	Reset	Bits 0 – 3 cleared, bits 4 – 7 input signals
TXx	Reset	High
Interrupt (RCVR ERRS)	Read LSR/reset	Low
Interrupt (receiver data ready)	Read RBR/reset	Low
Interrupt (THRE)	Read IIR/write THR/reset	Low
Interrupt (modem status changes)	Read MSR/reset	Low
$\overline{\text{RTS}}$	Reset	High
$\overline{\text{DTR}}$	Reset	High

PRINCIPLES OF OPERATION

scratchpad register

The scratchpad register is an 8-bit read/write register that has no effect on any ACE channel. It is intended to be used by the programmer to hold data temporarily.

$\overline{\text{TXRDY}}$ operation

In mode 0, $\overline{\text{TXRDY}}$ is asserted (low) when the transmit FIFO is empty; it is released (high) when the FIFO contains at least one byte. In this way, the FIFO is written with 16 bytes when $\overline{\text{TXRDY}}$ is asserted (low).

In mode 1, $\overline{\text{TXRDY}}$ is asserted (low) when the transmit FIFO is not full; in this mode, the transmit FIFO is written with another byte when $\overline{\text{TXRDY}}$ is asserted (low).

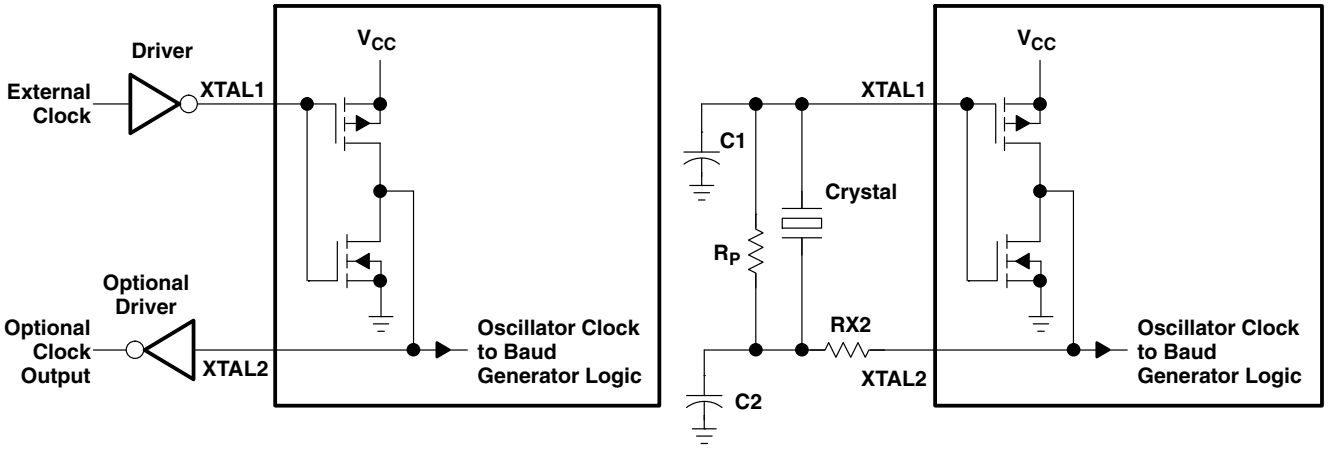

TYPICAL CRYSTAL OSCILLATOR NETWORK

CRYSTAL	R_P	RX2	C1	C2
3.1 MHz	1 MΩ	1.5 kΩ	10 – 30 pF	40 – 60 pF
1.8 MHz	1 MΩ	1.5 kΩ	10 – 30 pF	40 – 60 pF

Figure 24. Typical Clock Circuits

Revision History

DATE	REV	PAGE	SECTION	DESCRIPTION
02 JUNE 2010	E	7	terminal functions table	Added pin numbers to PN package
23 FEB 2010	C	37		48-pin PM package drawing and terminal function descriptions were added for the new TL16C554APM device
25 AUG 2005	B	1	features	Added voltage information to Up to 16–MHZ Clock Rate ....
29 JUL 2003	A			Changes unknown
01 AUG 2001	*			Original version

NOTE: Page numbers for previous revisions may differ from page numbers in the current version.

Revision History

DATE	REV	PAGE	SECTION	DESCRIPTION
3/2/06	B	21	—	Near middle of page, changed (FCR0 = 1, IER = 1). to (FCR0 =1, IER1 = 1).
2/25/05	A	—	—	Changed from Product Preview to Production Data.
		—	Typical Characteristics	Added Typical Characteristics.
		1	Description	Split first paragraph into two and started second paragraph on next column to improve flow.
		3, 4	Electrical Characteristics (+5V)	Changed condition note to refer to placeholder Figure XXX.
		5, 6		Changed condition note to refer to placeholder Figure X.
		7, 8	Electrical Characteristics (+3.3V)	Changed condition note to refer to placeholder Figure XX.
		9, 10	Typical Characteristics (+5V)	Changed part number in Figures 6 and 10 to read OPA2832.
				Changed condition note to refer to placeholder Figure XXX.
		10		Added note “One Channel Only” to Figure 11.
		12–15		Changed condition note to refer to placeholder Figure X.
		13, 14		Changed part number in Figures 29, 32, and 34 to read OPA2832.
		17	Typical Characteristics (+3.3V)	Changed part number in Figure 49 to read OPA2832.
		17, 18		Changed condition note to refer to placeholder Figure XX.
2/8/05	*	See Note	Global	Product Preview information.
		1	Front Page Diagram	Added image title.
			Logo	Changed logo from TI to Burr-Brown Products from Texas Instruments
			Front Page Diagram	Added the word “Chebyshev” to diagram title.
			Features	Changed 350V/ns to 350V/µs in sixth bullet.
		2	Pin Out	Changed pin out drawing.
		3	Electrical Characteristics (±5V)	Added em-dash (—) to +25°C column of Input Bias Current Drift line under DC Performance section of table.
				Changed columns 2, 3, 4, 5, 7, and 9 to eliminate unnatural breaks in table and improve appearance.
		7, 8	Electrical Characteristics (+3.3V)	Deleted unnecessary sixth column of table.

NOTE: Page numbers for previous revisions may differ from page numbers in the current version.

PACKAGING INFORMATION

Orderable part number	Status (1)	Material type (2)	Package | Pins	Package qty | Carrier	RoHS (3)	Lead finish/ Ball material (4)	MSL rating/ Peak reflow (5)	Op temp (°C)	Part marking (6)
TL16C554AFN	Active	Production	PLCC (FN) | 68	18 | TUBE	Yes	NIPDAU	Level-3-260C-168 HR	0 to 70	TL16C554A
TL16C554AFN.A	Active	Production	PLCC (FN) | 68	18 | TUBE	Yes	NIPDAU	Level-3-260C-168 HR	0 to 70	TL16C554A
TL16C554AFNG4	Active	Production	PLCC (FN) | 68	18 | TUBE	Yes	NIPDAU	Level-3-260C-168 HR	0 to 70	TL16C554A
TL16C554AFNR	Active	Production	PLCC (FN) | 68	250 | SMALL T&R	Yes	NIPDAU	Level-3-260C-168 HR	0 to 70	TL16C554A
TL16C554AFNR.A	Active	Production	PLCC (FN) | 68	250 | SMALL T&R	Yes	NIPDAU	Level-3-260C-168 HR	0 to 70	TL16C554A
TL16C554AIFN	Active	Production	PLCC (FN) | 68	18 | TUBE	Yes	NIPDAU	Level-3-260C-168 HR	-40 to 85	TL16C554AI
TL16C554AIFN.A	Active	Production	PLCC (FN) | 68	18 | TUBE	Yes	NIPDAU	Level-3-260C-168 HR	-40 to 85	TL16C554AI
TL16C554AIFNR	Active	Production	PLCC (FN) | 68	250 | LARGE T&R	Yes	NIPDAU	Level-3-260C-168 HR	-40 to 85	TL16C554AI
TL16C554AIFNR.A	Active	Production	PLCC (FN) | 68	250 | LARGE T&R	Yes	NIPDAU	Level-3-260C-168 HR	-40 to 85	TL16C554AI
TL16C554AIPN	Active	Production	LQFP (PN) | 80	119 | JEDEC TRAY (10+1)	Yes	NIPDAU	Level-3-260C-168 HR	-40 to 85	TL16C554AI
TL16C554AIPN.A	Active	Production	LQFP (PN) | 80	119 | JEDEC TRAY (10+1)	Yes	NIPDAU	Level-3-260C-168 HR	-40 to 85	TL16C554AI
TL16C554AIPNG4	Active	Production	LQFP (PN) | 80	119 | JEDEC TRAY (10+1)	Yes	NIPDAU	Level-3-260C-168 HR	-40 to 85	TL16C554AI
TL16C554AIPNR	Active	Production	LQFP (PN) | 80	1000 | LARGE T&R	Yes	NIPDAU	Level-3-260C-168 HR	-40 to 85	TL16C554AI
TL16C554AIPNR.A	Active	Production	LQFP (PN) | 80	1000 | LARGE T&R	Yes	NIPDAU	Level-3-260C-168 HR	-40 to 85	TL16C554AI
TL16C554APN	Active	Production	LQFP (PN) | 80	119 | JEDEC TRAY (10+1)	Yes	NIPDAU	Level-3-260C-168 HR	0 to 70	TL16C554A
TL16C554APN.A	Active	Production	LQFP (PN) | 80	119 | JEDEC TRAY (10+1)	Yes	NIPDAU	Level-3-260C-168 HR	0 to 70	TL16C554A
TL16C554APNG4	Active	Production	LQFP (PN) | 80	119 | JEDEC TRAY (10+1)	Yes	NIPDAU	Level-3-260C-168 HR	0 to 70	TL16C554A
TL16C554APNR	Active	Production	LQFP (PN) | 80	1000 | LARGE T&R	Yes	NIPDAU	Level-3-260C-168 HR	0 to 70	TL16C554A
TL16C554APNR.A	Active	Production	LQFP (PN) | 80	1000 | LARGE T&R	Yes	NIPDAU	Level-3-260C-168 HR	0 to 70	TL16C554A
TL16CP554AIPM	Obsolete	Production	LQFP (PM) | 64	-	-	Call TI	Call TI	-40 to 85	TL16CP554AIPM
TL16CP554APM	Obsolete	Production	LQFP (PM) | 64	-	-	Call TI	Call TI	0 to 70	TL16CP554APM

(1) **Status:** For more details on status, see our product life cycle.

(2) **Material type:** When designated, preproduction parts are prototypes/experimental devices, and are not yet approved or released for full production. Testing and final process, including without limitation quality assurance, reliability performance testing, and/or process qualification, may not yet be complete, and this item is subject to further changes or possible discontinuation. If available for ordering, purchases will be subject to an additional waiver at checkout, and are intended for early internal evaluation purposes only. These items are sold without warranties of any kind.

(3) **RoHS values:** Yes, No, RoHS Exempt. See the TI RoHS Statement for additional information and value definition.

(4) **Lead finish/Ball material:** Parts may have multiple material finish options. Finish options are separated by a vertical ruled line. Lead finish/Ball material values may wrap to two lines if the finish value exceeds the maximum column width.

(5) **MSL rating/Peak reflow:** The moisture sensitivity level ratings and peak solder (reflow) temperatures. In the event that a part has multiple moisture sensitivity ratings, only the lowest level per JEDEC standards is shown. Refer to the shipping label for the actual reflow temperature that will be used to mount the part to the printed circuit board.

(6) **Part marking:** There may be an additional marking, which relates to the logo, the lot trace code information, or the environmental category of the part.

Multiple part markings will be inside parentheses. Only one part marking contained in parentheses and separated by a "~" will appear on a part. If a line is indented then it is a continuation of the previous line and the two combined represent the entire part marking for that device.

Important Information and Disclaimer: The information provided on this page represents TI's knowledge and belief as of the date that it is provided. TI bases its knowledge and belief on information provided by third parties, and makes no representation or warranty as to the accuracy of such information. Efforts are underway to better integrate information from third parties. TI has taken and continues to take reasonable steps to provide representative and accurate information but may not have conducted destructive testing or chemical analysis on incoming materials and chemicals. TI and TI suppliers consider certain information to be proprietary, and thus CAS numbers and other limited information may not be available for release.

In no event shall TI's liability arising out of such information exceed the total purchase price of the TI part(s) at issue in this document sold by TI to Customer on an annual basis.

TUBE

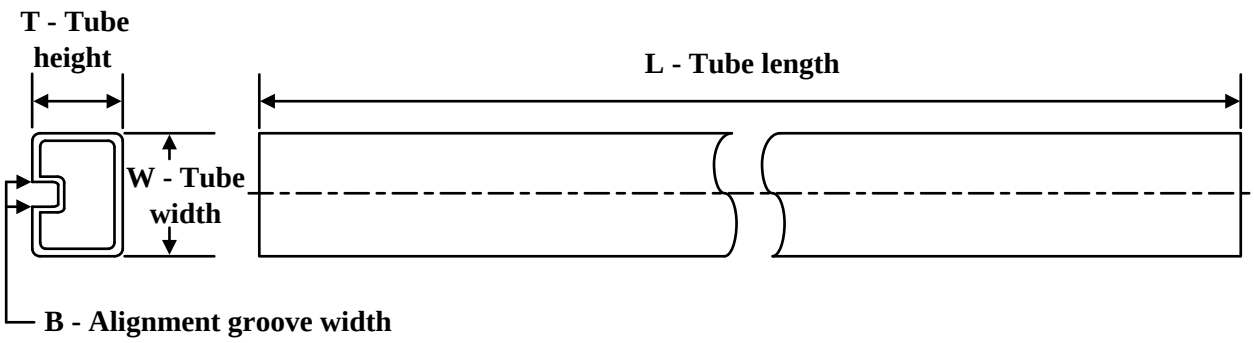

*All dimensions are nominal

Device	Package Name	Package Type	Pins	SPQ	L (mm)	W (mm)	T (µm)	B (mm)
TL16C554AFN	FN	PLCC	68	18	506.98	25.91	5330	5.33
TL16C554AFN.A	FN	PLCC	68	18	506.98	25.91	5330	5.33
TL16C554AFNG4	FN	PLCC	68	18	506.98	25.91	5330	5.33
TL16C554AIFN	FN	PLCC	68	18	506.98	25.91	5330	5.33
TL16C554AIFN.A	FN	PLCC	68	18	506.98	25.91	5330	5.33

TRAY

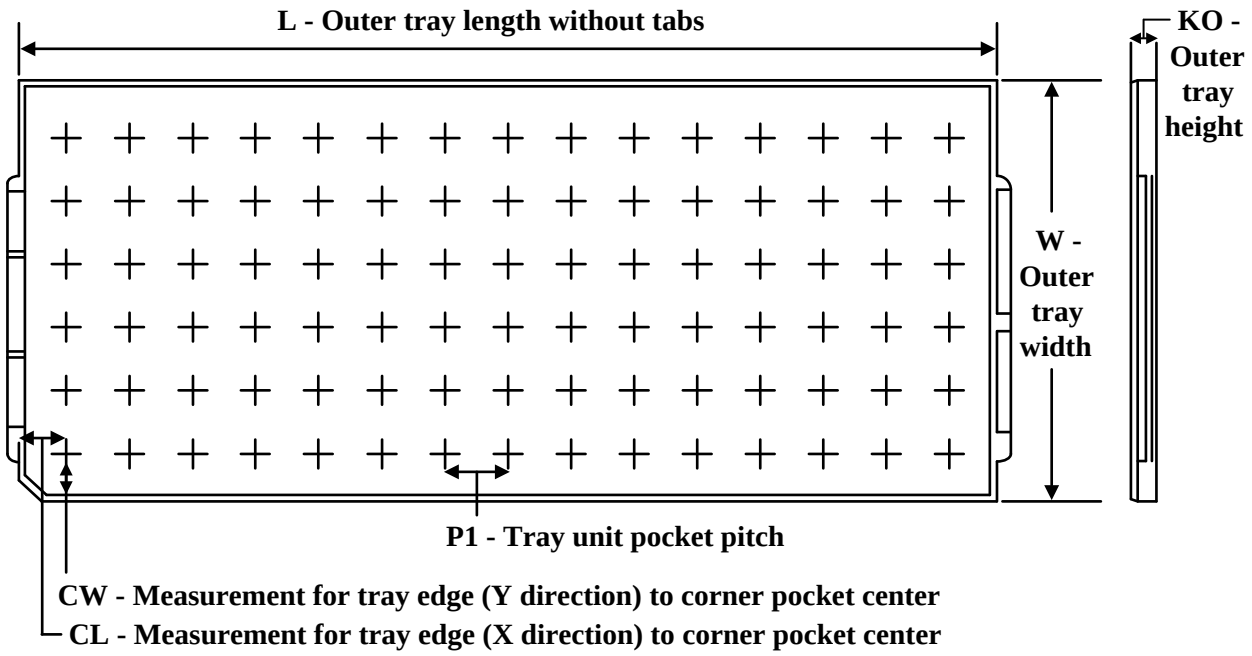

Chamfer on Tray corner indicates Pin 1 orientation of packed units.

*All dimensions are nominal

Device	Package Name	Package Type	Pins	SPQ	Unit array matrix	Max temperature (°C)	L (mm)	W (mm)	K0 (µm)	P1 (mm)	CL (mm)	CW (mm)
TL16C554AIPN	PN	LQFP	80	119	7 X 17	150	315	135.9	7620	17.9	14.3	13.95
TL16C554AIPN.A	PN	LQFP	80	119	7 X 17	150	315	135.9	7620	17.9	14.3	13.95
TL16C554AIPNG4	PN	LQFP	80	119	7 X 17	150	315	135.9	7620	17.9	14.3	13.95
TL16C554APN	PN	LQFP	80	119	7 X 17	150	315	135.9	7620	17.9	14.3	13.95
TL16C554APN.A	PN	LQFP	80	119	7 X 17	150	315	135.9	7620	17.9	14.3	13.95
TL16C554APNG4	PN	LQFP	80	119	7 X 17	150	315	135.9	7620	17.9	14.3	13.95

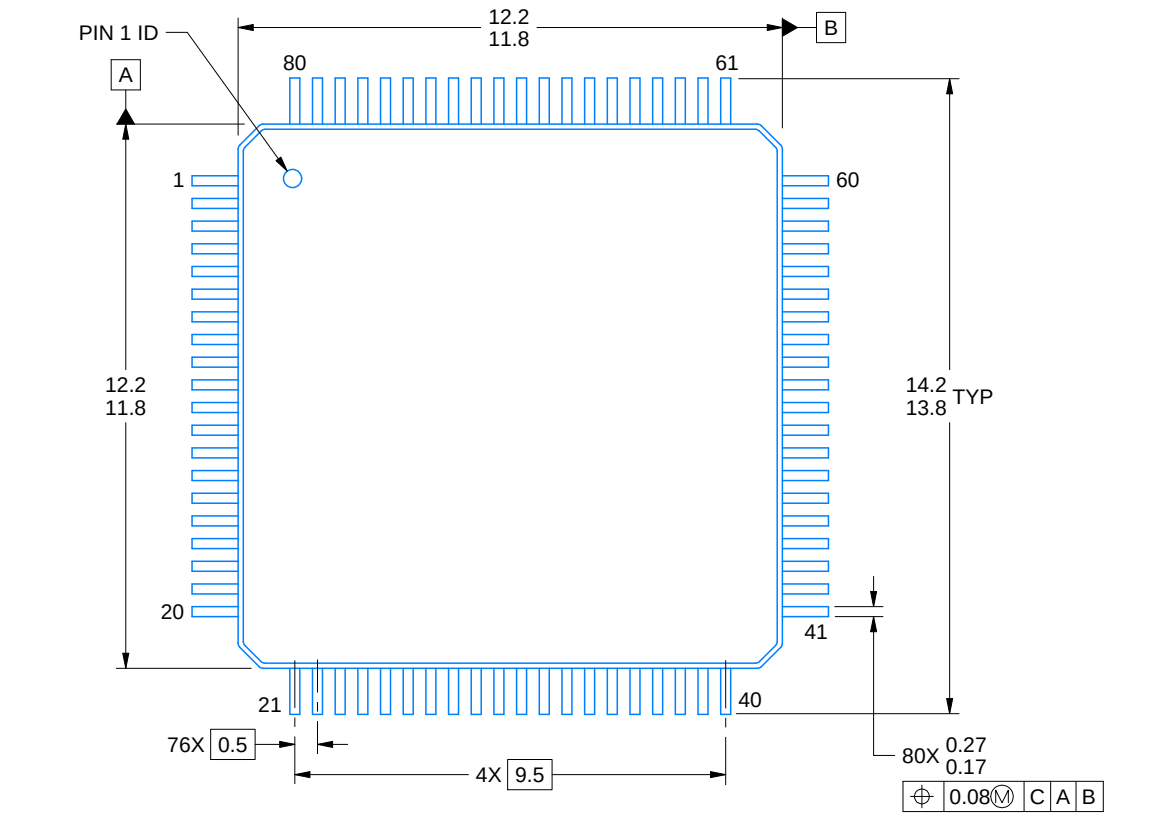

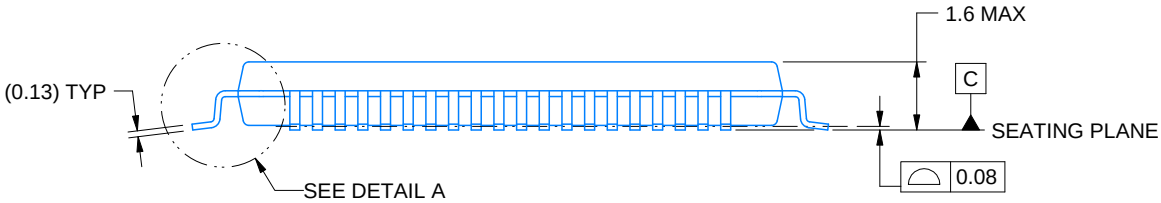

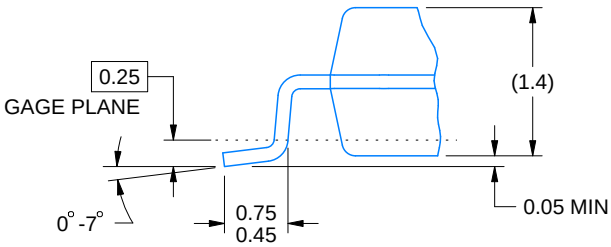

DETAIL A
TYPICAL

4215166/A 08/2022

NOTES:

1. All linear dimensions are in millimeters. Any dimensions in parenthesis are for reference only. Dimensioning and tolerancing per ASME Y14.5M.
2. This drawing is subject to change without notice.
3. Reference JEDEC registration MS-026.

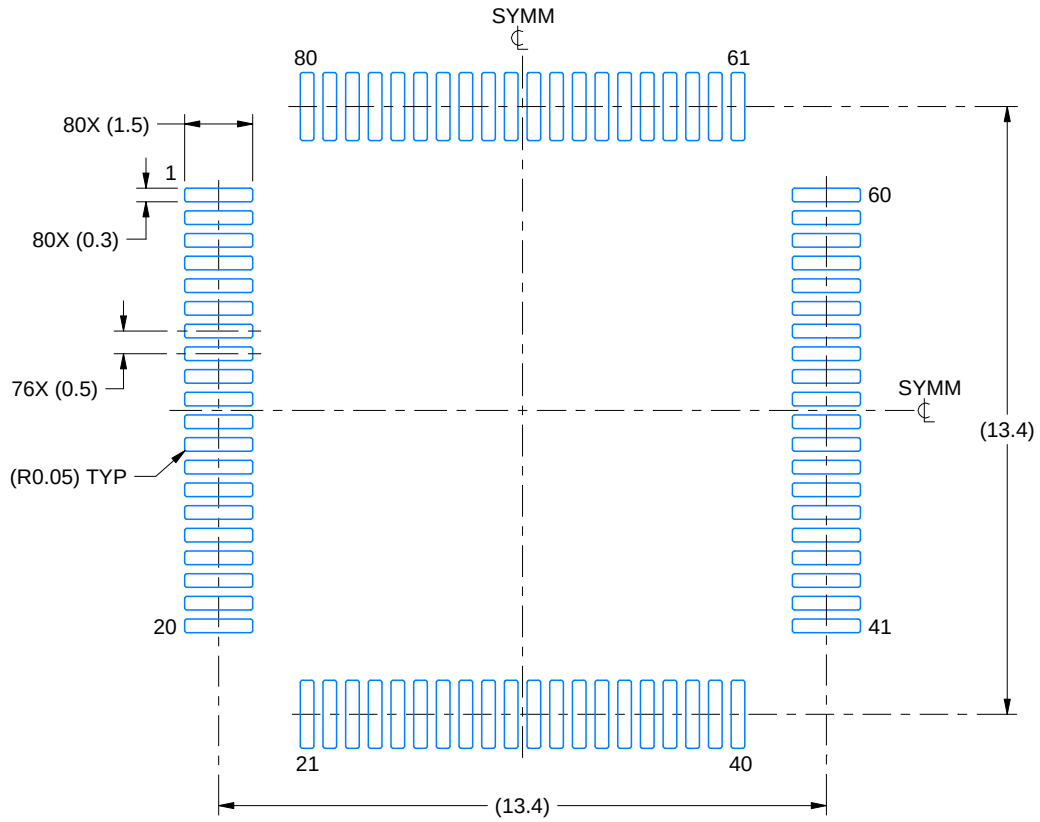

LAND PATTERN EXAMPLE
EXPOSED METAL SHOWN
SCALE:6X

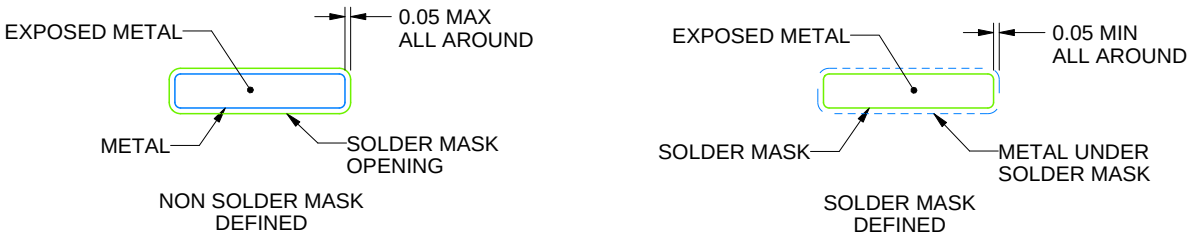

SOLDER MASK DETAILS

4215166/A 08/2022

NOTES: (continued)

4. Publication IPC-7351 may have alternate designs.
5. Solder mask tolerances between and around signal pads can vary based on board fabrication site.
6. For more information, see Texas Instruments literature number SLMA004 (www.ti.com/lit/slma004).

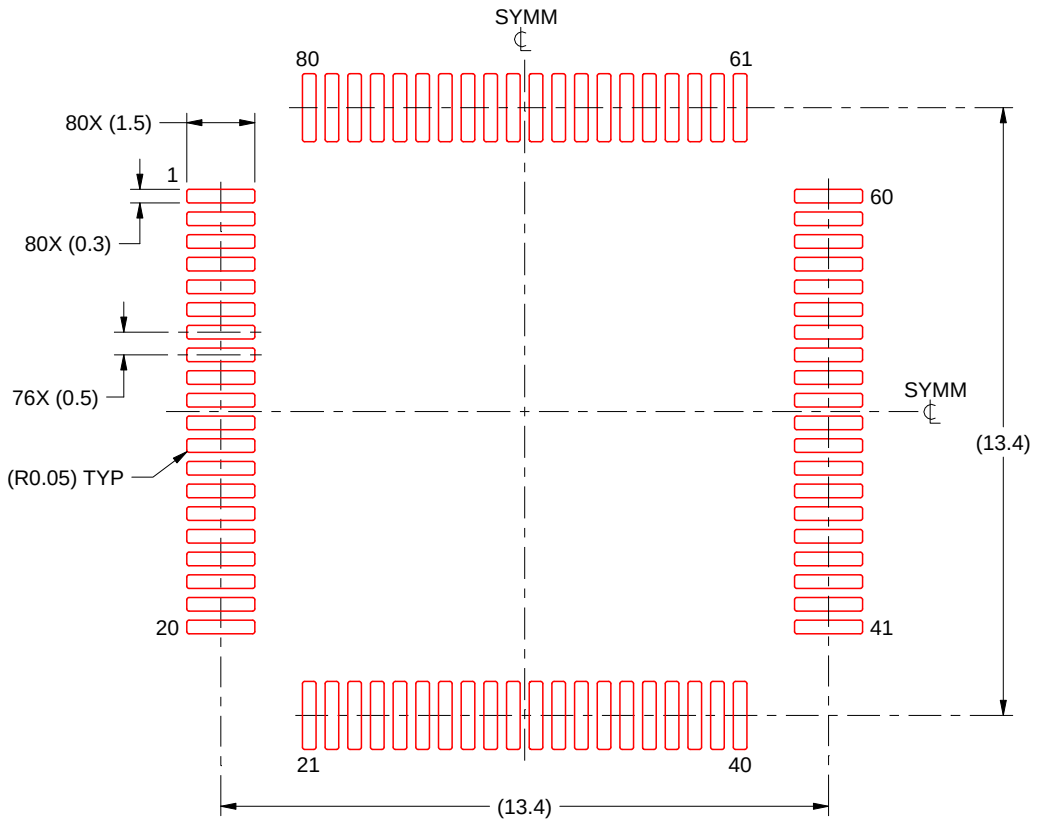

SOLDER PASTE EXAMPLE
BASED ON 0.1 mm THICK STENCIL
SCALE:6X

4215166/A 08/2022

NOTES: (continued)

7. Laser cutting apertures with trapezoidal walls and rounded corners may offer better paste release. IPC-7525 may have alternate design recommendations.
8. Board assembly site may have different recommendations for stencil design.

FN 68

PLCC - 4.57 mm max height

PLASTIC CHIP CARRIER

Images above are just a representation of the package family, actual package may vary.
Refer to the product data sheet for package details.

4040005-6/C

PACKAGE OUTLINE

FN0068A

PLCC - 4.57 mm max height

PLASTIC CHIP CARRIER

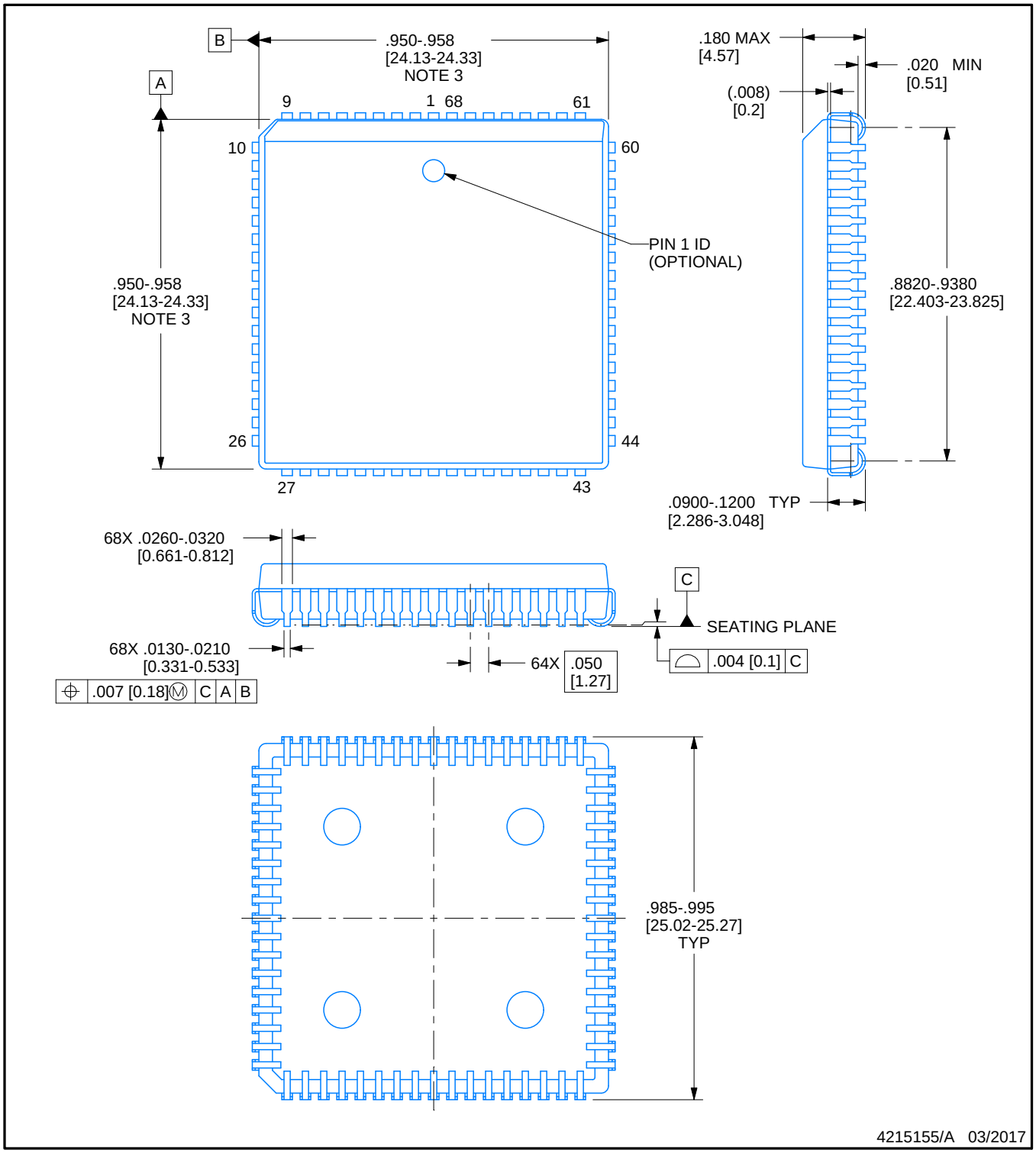

NOTES:

1. All linear dimensions are in inches. Any dimensions in brackets are in millimeters. Any dimensions in parenthesis are for reference only. Controlling dimensions are in inches. Dimensioning and tolerancing per ASME Y14.5M.
2. This drawing is subject to change without notice.
3. Dimension does not include mold protrusion. Maximum allowable mold protrusion .01 in [0.25 mm] per side.
4. Reference JEDEC registration MS-018.

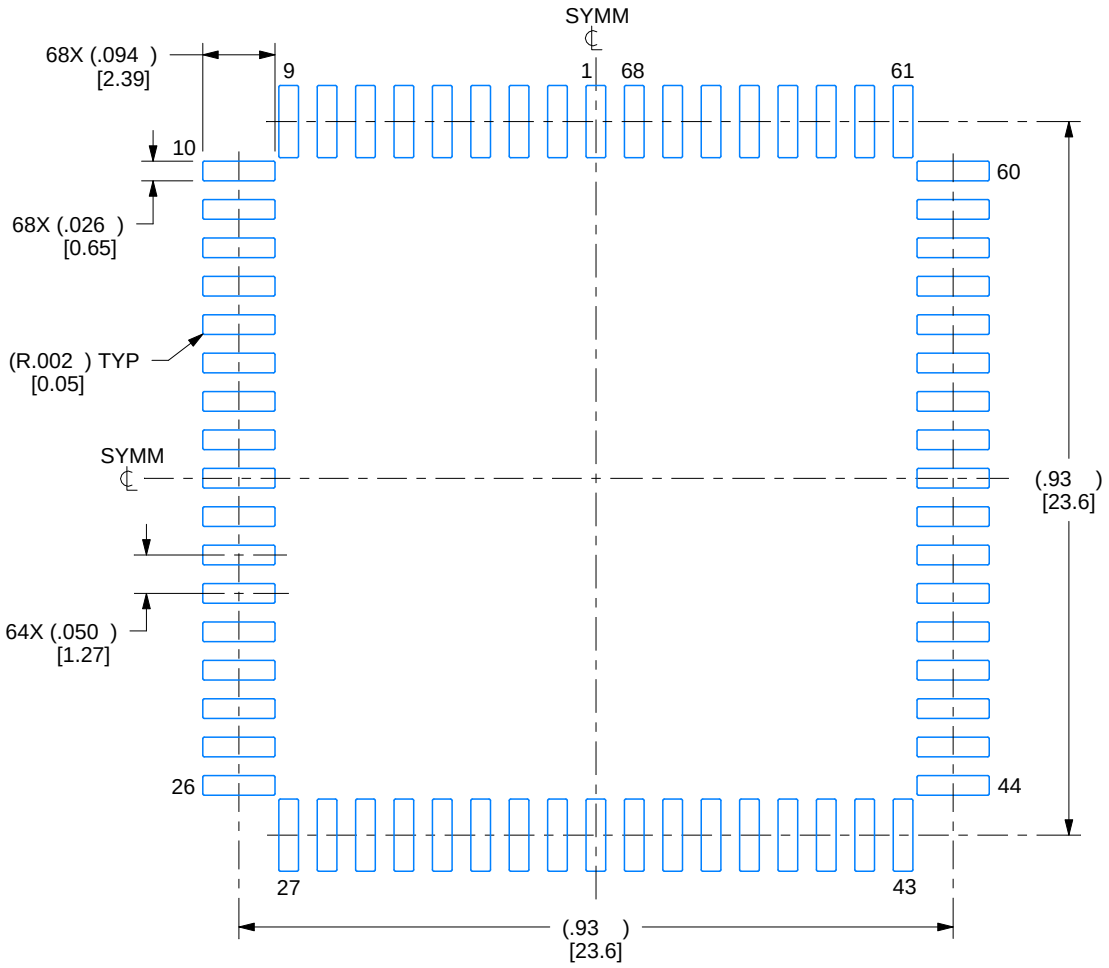

LAND PATTERN EXAMPLE
EXPOSED METAL SHOWN
SCALE:4X

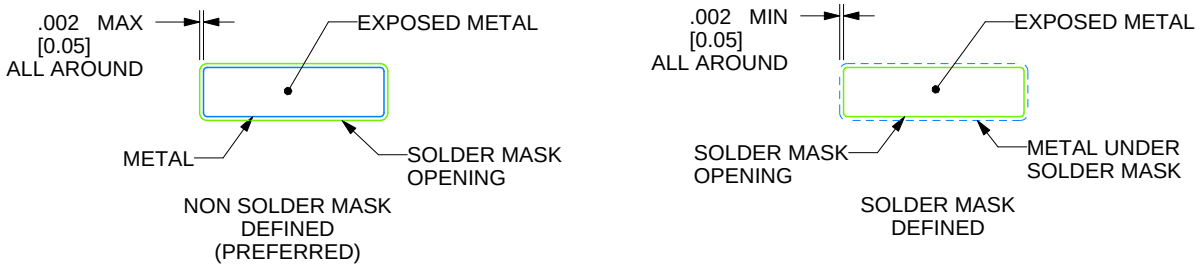

SOLDER MASK DETAILS

4215155/A 03/2017

NOTES: (continued)

5. Publication IPC-7351 may have alternate designs.
6. Solder mask tolerances between and around signal pads can vary based on board fabrication site.

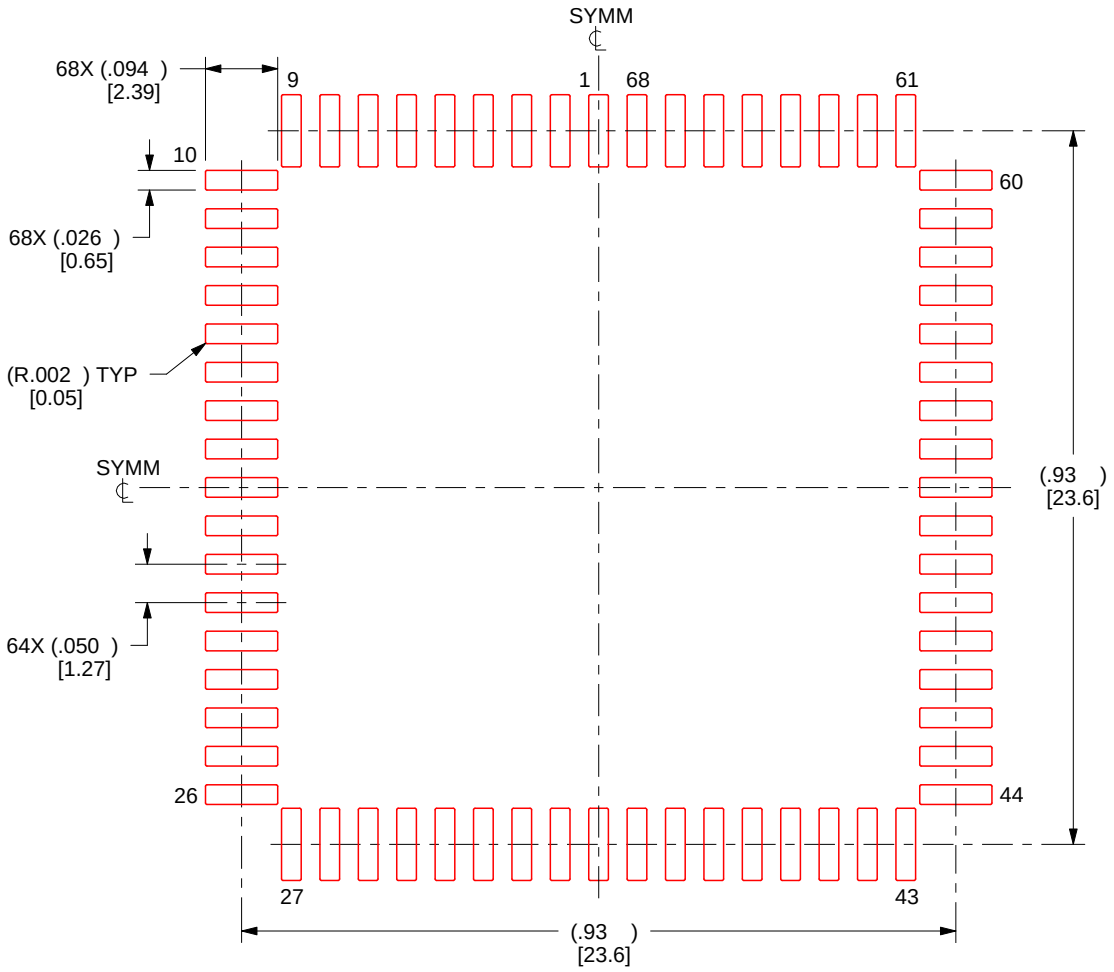

SOLDER PASTE EXAMPLE
SCALE:4X

4215155/A 03/2017

NOTES: (continued)

7. Laser cutting apertures with trapezoidal walls and rounded corners may offer better paste release. IPC-7525 may have alternate design recommendations.
8. Board assembly site may have different recommendations for stencil design.

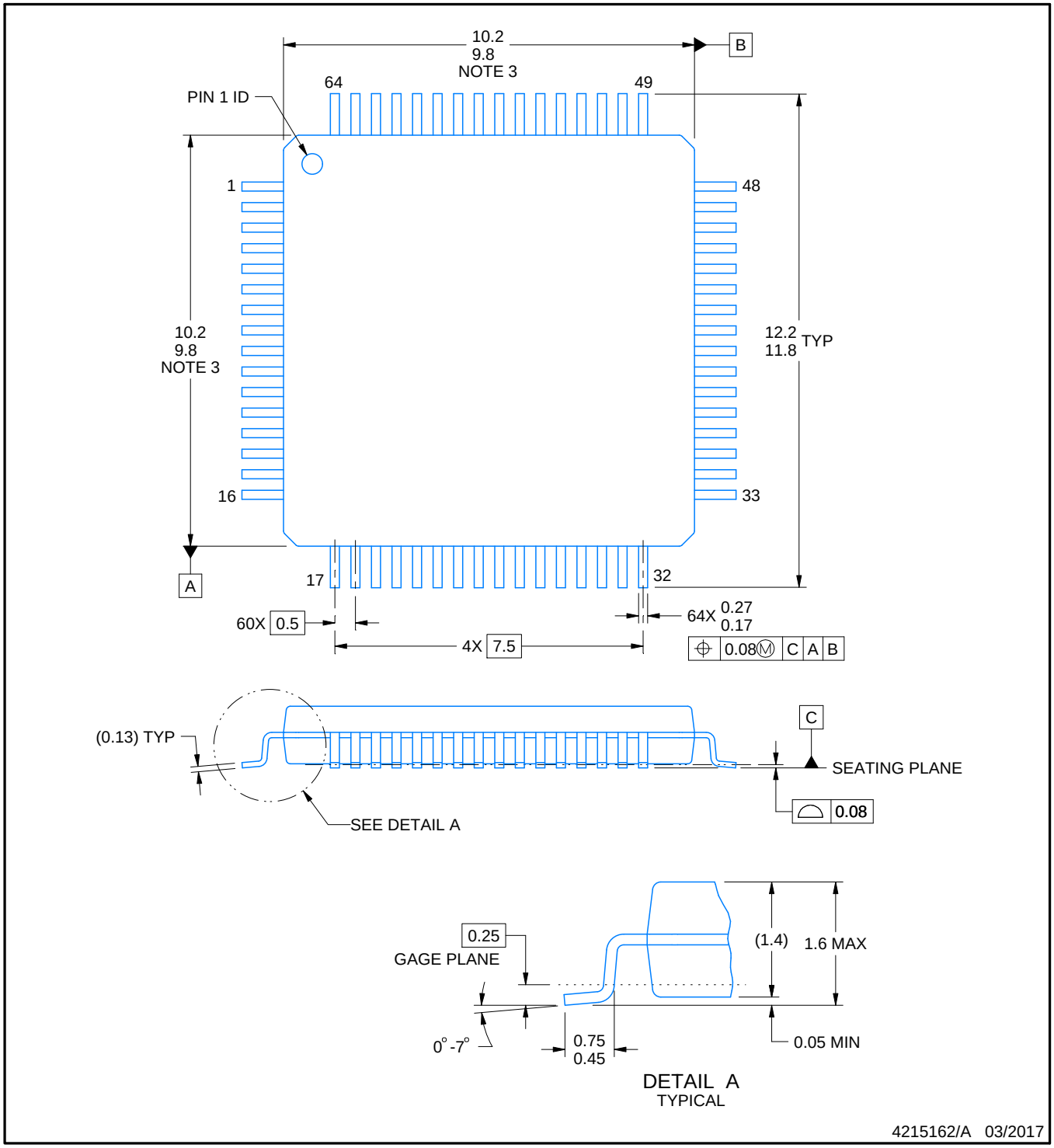

NOTES:

1. All linear dimensions are in millimeters. Any dimensions in parenthesis are for reference only. Dimensioning and tolerancing per ASME Y14.5M.
2. This drawing is subject to change without notice.
3. This dimension does not include mold flash, protrusions, or gate burrs. Mold flash, protrusions, or gate burrs shall not exceed 0.15 mm per side.
4. Reference JEDEC registration MS-026.

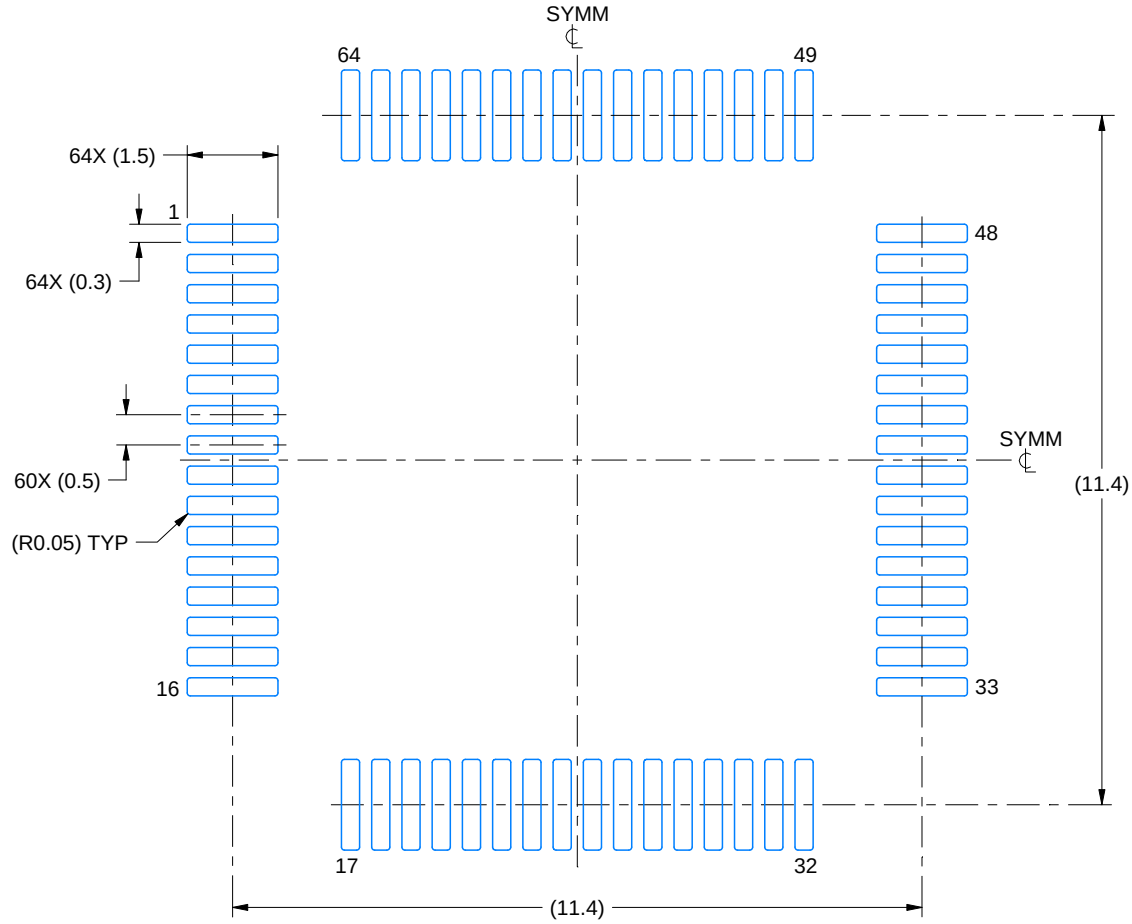

LAND PATTERN EXAMPLE
EXPOSED METAL SHOWN
SCALE:8X

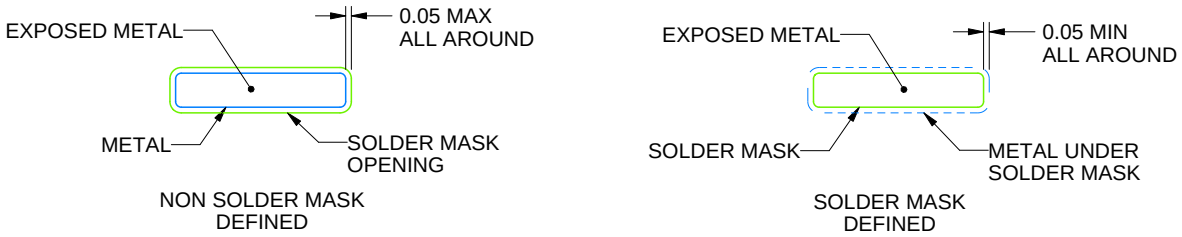

SOLDER MASK DETAILS

4215162/A 03/2017

NOTES: (continued)

5. Publication IPC-7351 may have alternate designs.
6. Solder mask tolerances between and around signal pads can vary based on board fabrication site.
7. For more information, see Texas Instruments literature number SLMA004 (www.ti.com/lit/slma004).

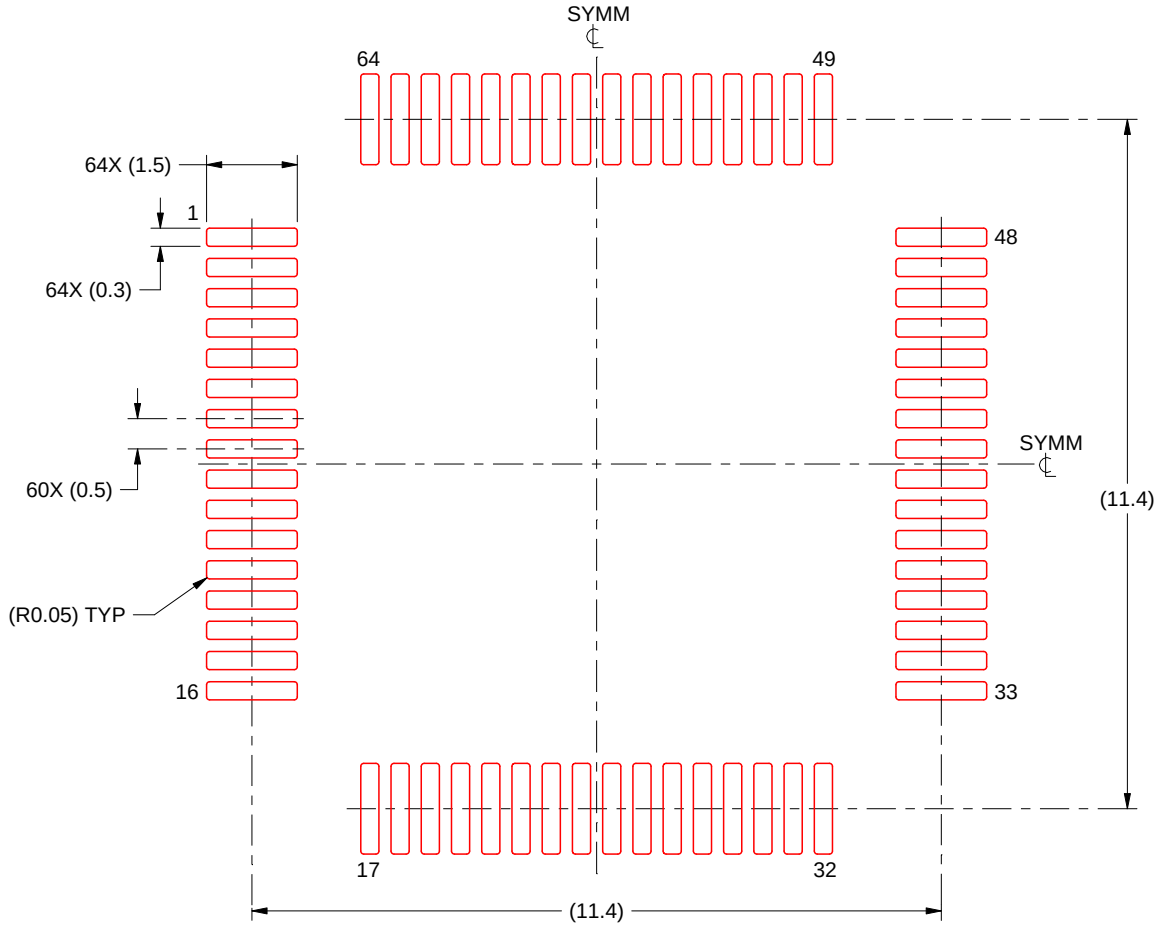

SOLDER PASTE EXAMPLE
BASED ON 0.125 mm THICK STENCIL
SCALE:8X

4215162/A 03/2017

NOTES: (continued)

8. Laser cutting apertures with trapezoidal walls and rounded corners may offer better paste release. IPC-7525 may have alternate design recommendations.
9. Board assembly site may have different recommendations for stencil design.

IMPORTANT NOTICE AND DISCLAIMER

TI PROVIDES TECHNICAL AND RELIABILITY DATA (INCLUDING DATASHEETS), DESIGN RESOURCES (INCLUDING REFERENCE DESIGNS), APPLICATION OR OTHER DESIGN ADVICE, WEB TOOLS, SAFETY INFORMATION, AND OTHER RESOURCES “AS IS” AND WITH ALL FAULTS, AND DISCLAIMS ALL WARRANTIES, EXPRESS AND IMPLIED, INCLUDING WITHOUT LIMITATION ANY IMPLIED WARRANTIES OF MERCHANTABILITY, FITNESS FOR A PARTICULAR PURPOSE OR NON-INFRINGEMENT OF THIRD PARTY INTELLECTUAL PROPERTY RIGHTS.

These resources are intended for skilled developers designing with TI products. You are solely responsible for (1) selecting the appropriate TI products for your application, (2) designing, validating and testing your application, and (3) ensuring your application meets applicable standards, and any other safety, security, regulatory or other requirements.

These resources are subject to change without notice. TI grants you permission to use these resources only for development of an application that uses the TI products described in the resource. Other reproduction and display of these resources is prohibited. No license is granted to any other TI intellectual property right or to any third party intellectual property right. TI disclaims responsibility for, and you fully indemnify TI and its representatives against any claims, damages, costs, losses, and liabilities arising out of your use of these resources.

TI’s products are provided subject to TI’s Terms of Sale, TI’s General Quality Guidelines, or other applicable terms available either on ti.com or provided in conjunction with such TI products. TI’s provision of these resources does not expand or otherwise alter TI’s applicable warranties or warranty disclaimers for TI products. Unless TI explicitly designates a product as custom or customer-specified, TI products are standard, catalog, general purpose devices.

TI objects to and rejects any additional or different terms you may propose.

Copyright © 2026, Texas Instruments Incorporated

Last updated 10/2025