- **Qualified for Automotive Applications**
- **12-Bit Resolution A/D Converter**
- **10-μs Conversion Time Over Operating Temperature**
- **11 Analog Input Channels**
- **Three Built-In Self-Test Modes**
- **Inherent Sample-and-Hold Function**
- **Linearity Error . . . ±1 LSB Max**
- **On-Chip System Clock**
- **End-of-Conversion Output**
- **Unipolar or Bipolar Output Operation (Signed Binary With Respect to 1/2 the Applied Voltage Reference)**
- **Programmable MSB or LSB First**
- **Programmable Power Down**
- **Programmable Output Data Length**
- **CMOS Technology**
- **Application Report Available‡**

DB OR DW PACKAGE
(TOP VIEW)

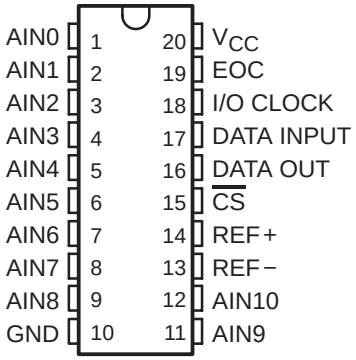

description

The TLC2543 is a 12-bit, switched-capacitor, successive-approximation, analog-to-digital converters. Each device, with three control inputs [chip select ($\overline{CS}$), the input-output clock, and the address input (DATA INPUT)], is designed for communication with the serial port of a host processor or peripheral through a serial 3-state output. The device allows high-speed data transfers from the host.

In addition to the high-speed converter and versatile control capability, the device has an on-chip 14-channel multiplexer that can select any one of 11 inputs or any one of three internal self-test voltages. The sample-and-hold function is automatic. At the end of conversion, the end-of-conversion (EOC) output goes high to indicate that conversion is complete. The converter incorporated in the device features differential high-impedance reference inputs that facilitate ratiometric conversion, scaling, and isolation of analog circuitry from logic and supply noise. A switched-capacitor design allows low-error conversion over the full operating temperature range.

ORDERING INFORMATION†

T_A	PACKAGE‡		ORDERABLE PART NUMBER	TOP-SIDE MARKING
−40°C to 85°C	SSOP − DB	Tape and reel	TLC2543IDBRQ1	TLC2543Q1
−40°C to 125°C	SOP − DW	Tape and reel	TLC2543QDWRQ1	TLC2543Q1

† For the most current package and ordering information, see the Package Option Addendum at the end of this document, or see the TI web site at http://www.ti.com.
‡ Package drawings, thermal data, and symbolization are available at http://www.ti.com/packaging.

Please be aware that an important notice concerning availability, standard warranty, and use in critical applications of Texas Instruments semiconductor products and disclaimers thereto appears at the end of this data sheet.

‡ Microcontroller Based Data Acquisition Using the TLC2543 12-bit Serial-Out ADC (SLAA012)

PRODUCTION DATA information is current as of publication date. Products conform to specifications per the terms of Texas Instruments standard warranty. Production processing does not necessarily include testing of all parameters.

Copyright © 2008 Texas Instruments Incorporated

functional block diagram

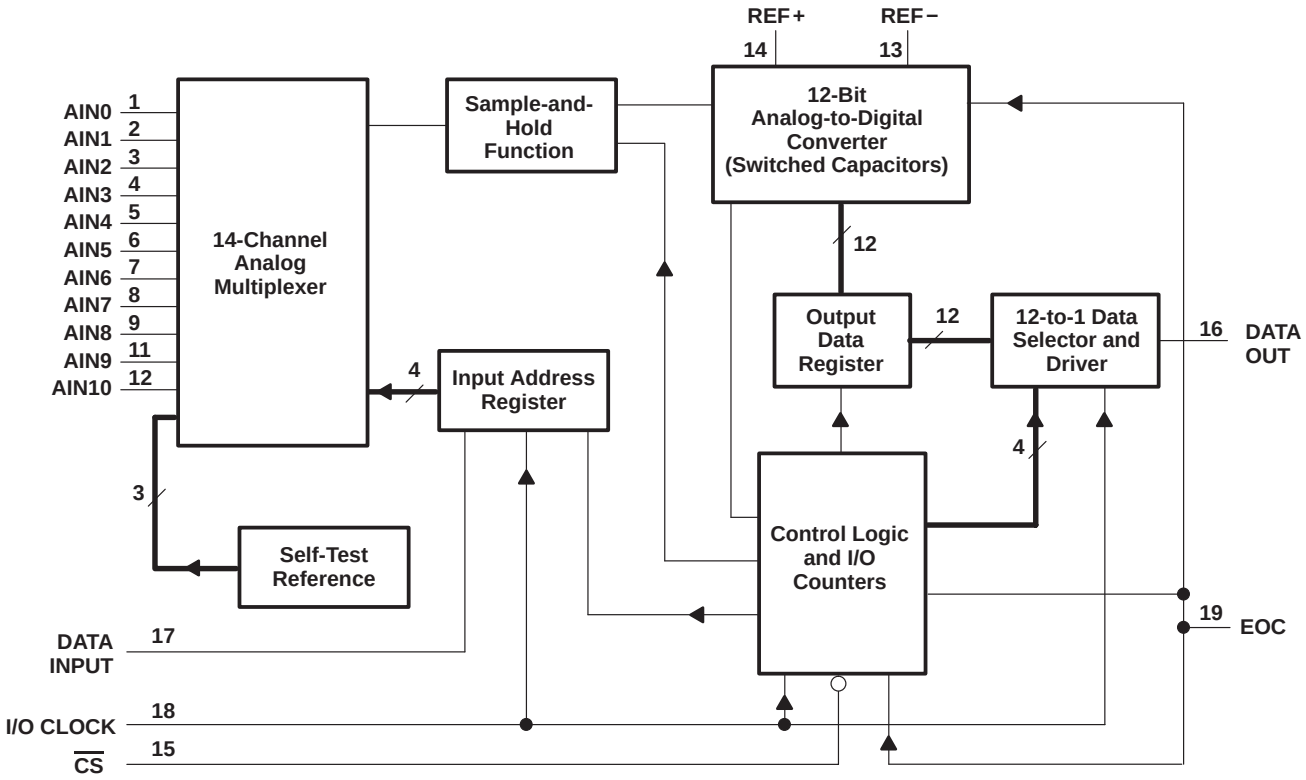

Terminal Functions

TERMINAL		I/O	DESCRIPTION
NAME	NO.		
AIN0 − AIN10	1−9, 11, 12	I	Analog input. These 11 analog-signal inputs are internally multiplexed. The driving source impedance should be less than or equal to 50 Ω for 4.1-MHz I/O CLOCK operation and be capable of slewing the analog input voltage into a capacitance of 60 pF.
$\overline{CS}$	15	I	Chip select. A high-to-low transition on $\overline{CS}$ resets the internal counters and controls and enables DATA OUT, DATA INPUT, and I/O CLOCK. A low-to-high transition disables DATA INPUT and I/O CLOCK within a setup time.
DATA INPUT	17	I	Serial-data input. A 4-bit serial address selects the desired analog input or test voltage to be converted next. The serial data is presented with the MSB first and is shifted in on the first four rising edges of I/O CLOCK. After the four address bits are read into the address register, I/O CLOCK clocks the remaining bits in order.
DATA OUT	16	O	The 3-state serial output for the A/D conversion result. DATA OUT is in the high-impedance state when $\overline{CS}$ is high and active when $\overline{CS}$ is low. With a valid $\overline{CS}$, DATA OUT is removed from the high-impedance state and is driven to the logic level corresponding to the MSB/LSB† value of the previous conversion result. The next falling edge of I/O CLOCK drives DATA OUT to the logic level corresponding to the next MSB/LSB, and the remaining bits are shifted out in order.
EOC	19	O	End of conversion. EOC goes from a high to a low logic level after the falling edge of the last I/O CLOCK and remains low until the conversion is complete and the data is ready for transfer.
GND	10		Ground. GND is the ground return terminal for the internal circuitry. Unless otherwise noted, all voltage measurements are with respect to GND.
I/O CLOCK	18	I	Input/output clock. I/O CLOCK receives the serial input and performs the following four functions: 1. It clocks the eight input data bits into the input data register on the first eight rising edges of I/O CLOCK with the multiplexer address available after the fourth rising edge. 2. On the fourth falling edge of I/O CLOCK, the analog input voltage on the selected multiplexer input begins charging the capacitor array and continues to do so until the last falling edge of the I/O CLOCK. 3. It shifts the 11 remaining bits of the previous conversion data out on DATA OUT. Data changes on the falling edge of I/O CLOCK. 4. It transfers control of the conversion to the internal state controller on the falling edge of the last I/O CLOCK.
REF+	14	I	Positive reference voltage The upper reference voltage value (nominally V_{CC}) is applied to REF+. The maximum input voltage range is determined by the difference between the voltage applied to this terminal and the voltage applied to the REF− terminal.
REF−	13	I	Negative reference voltage. The lower reference voltage value (nominally ground) is applied to REF−.
V_{CC}	20		Positive supply voltage

† MSB/LSB = Most significant bit / least significant bit

absolute maximum ratings over operating free-air temperature range (unless otherwise noted)†

Supply voltage range, V_{CC} (see Note 1) . . . . . −0.5 V to 6.5 V
Input voltage range, V_I (any input) . . . . . −0.3 V to V_{CC} + 0.3 V
Output voltage range, V_O . . . . . −0.3 V to V_{CC} + 0.3 V
Positive reference voltage, V_{ref+} . . . . . V_{CC} + 0.1 V
Negative reference voltage, V_{ref-} . . . . . −0.1 V
Peak input current, I_I (any input) . . . . . ±20 mA
Peak total input current, I_I (all inputs) . . . . . ±30 mA
Operating free-air temperature range, T_A: I suffix . . . . . −40°C to 85°C
Q suffix . . . . . −40°C to 125°C
Storage temperature range, T_{stg} . . . . . −65°C to 150°C
Lead temperature 1,6 mm (1/16 inch) from the case for 10 seconds . . . . . 260°C

† Stresses beyond those listed under “absolute maximum ratings” may cause permanent damage to the device. These are stress ratings only, and functional operation of the device at these or any other conditions beyond those indicated under “recommended operating conditions” is not implied. Exposure to absolute-maximum-rated conditions for extended periods may affect device reliability.

NOTE 1: All voltage values are with respect to the GND terminal with REF− and GND wired together (unless otherwise noted).

recommended operating conditions

		MIN	NOM	MAX	UNIT
Supply voltage, V_{CC}		4.5	5	5.5	V
Positive reference voltage, V_{ref+} (see Note 2)			V_{CC}		V
Negative reference voltage, V_{ref-} (see Note 2)			0		V
Differential reference voltage, $V_{ref+} - V_{ref-}$ (see Note 2)		2.5	V_{CC}	V_{CC}+0.1	V
Analog input voltage (see Note 2)		0		V_{CC}	V
High-level control input voltage, V_{IH}	V_{CC} = 4.5 V to 5.5 V	2			V
Low-level control input voltage, V_{IL}	V_{CC} = 4.5 V to 5.5 V			0.8	V
Clock frequency at I/O CLOCK		0		4.1	MHz
Setup time, address bits at DATA INPUT before I/O CLOCK↑, $t_{su(A)}$ (see Figure 4)		100			ns
Hold time, address bits after I/O CLOCK↑, $t_{h(A)}$ (see Figure 4)		0			ns
Hold time, $\overline{CS}$ low after last I/O CLOCK↓, $t_{h(CS)}$ (see Figure 5)		0			ns
Setup time, $\overline{CS}$ low before clocking in first address bit, $t_{su(CS)}$ (see Note 3 and Figure 5)		1.425			µs
Pulse duration, I/O CLOCK high, $t_{wH(I/O)}$		120			ns
Pulse duration, I/O CLOCK low, $t_{wL(I/O)}$		120			ns
Transition time, I/O CLOCK high to low, $t_{t(I/O)}$ (see Note 4 and Figure 6)				1	µs
Transition time, DATA INPUT and $\overline{CS}$, $t_{t(CS)}$				10	µs
Operating free-air temperature, T_A	I suffix	−40		85	°C
	Q suffix	−40		125	

NOTES: 2. Analog input voltages greater than that applied to REF+ convert as all ones (111111111111), while input voltages less than that applied to REF− convert as all zeros (000000000000).
3. To minimize errors caused by noise at the $\overline{CS}$ input, the internal circuitry waits for a setup time after $\overline{CS}$↓ before responding to control input signals. No attempt should be made to clock in an address until the minimum $\overline{CS}$ setup time has elapsed.
4. This is the time required for the clock input signal to fall from V_{IH}min to V_{IL}max or to rise from V_{IL}max to V_{IH}min. In the vicinity of normal room temperature, the devices function with input clock transition time as slow as 1 µs for remote data acquisition applications where the sensor and the A/D converter are placed several feet away from the controlling microprocessor.

electrical characteristics over recommended operating free-air temperature range, $V_{CC} = V_{ref+} = 4.5$ V to 5.5 V, $f_{(I/O\ CLOCK)} = 4.1$ MHz (unless otherwise noted)

PARAMETER			TEST CONDITIONS		MIN	TYP†	MAX	UNIT
V_{OH}	High-level output voltage		V_{CC} = 4.5 V,	I_{OH} = −1.6 mA	2.4			V
			V_{CC} = 4.5 V to 5.5 V,	I_{OH} = −20 μA	V_{CC} − 0.1			
V_{OL}	Low-level output voltage		V_{CC} = 4.5 V,	I_{OL} = 1.6 mA			0.4	V
			V_{CC} = 4.5 V to 5.5 V,	I_{OL} = 20 μA			0.1	
I_{OZ}	High-impedance off-state output current		$V_O = V_{CC}$,	$\overline{CS}$ at V_{CC}		1	2.5	μA
			V_O = 0,	$\overline{CS}$ at V_{CC}		1	−2.5	
I_{IH}	High-level input current		$V_I = V_{CC}$	T_A = −40°C to 85°C		0.5	1	μA
				T_A = 125°C			10	
I_{IL}	Low-level input current		V_I = 0	T_A = −40°C to 85°C		0.5	−1	μA
				T_A = 125°C			−10	
I_{CC}	Operating supply current		$\overline{CS}$ at 0 V			1	2.5	mA
$I_{CC(PD)}$	Power-down current		For all digital inputs, $0 \le V_I \le 0.5$ V or $V_I \ge V_{CC} - 0.5$ V			4	25	μA
	Selected channel leakage current		Selected channel at V_{CC}, Unselected channel at 0 V	T_A = −40°C to 85°C			1	μA
				T_A = 125°C			10	
			Selected channel at 0 V, Unselected channel at V_{CC}	T_A = −40°C to 85°C			−1	
				T_A = 125°C			−10	
	Maximum static analog reference current into REF+		$V_{ref+} = V_{CC}$,	V_{ref-} = GND		1	2.5	μA
C_i	Input capacitance	Analog inputs				30	60	pF
		Control inputs				5	15	

† All typical values are at V_{CC} = 5 V, T_A = 25°C.

operating characteristics over recommended operating free-air temperature range, $V_{CC} = V_{ref+} = 4.5$ V to 5.5 V, $f_{(I/O\ CLOCK)} = 4.1$ MHz

PARAMETER		TEST CONDITIONS	MIN	TYP†	MAX	UNIT
E_L	Linearity error (see Note 5)	See Figure 2			±1	LSB
E_D	Differential linearity error	See Figure 2			±1	LSB
E_O	Offset error (see Note 6)	See Note 2 and Figure 2			±1.5	LSB
E_G	Gain error (see Note 6)	See Note 2 and Figure 2			±1	LSB
E_T	Total unadjusted error (see Note 7)				±1.75	LSB
	Self-test output code (see Table 3 and Note 8)	DATA INPUT = 1011		2048		
		DATA INPUT = 1100		0		
		DATA INPUT = 1101		4095		
$t_{(conv)}$	Conversion time	See Figure 9 − Figure 14		8	10	µs
t_c	Total cycle time (access, sample, and conversion)	See Figure 9 − Figure 14 and Note 9			10 + total I/O CLOCK periods + $t_{d(I/O-EOC)}$	µs
t_{acq}	Channel acquisition time (sample)	See Figures 9 − 14 and Note 9	4		12	I/O CLOCK periods
t_v	Valid time, DATA OUT remains valid after I/O CLOCK↓	See Figure 6	10			ns
$t_{d(I/O-DATA)}$	Delay time, I/O CLOCK↓ to DATA OUT valid	See Figure 6			150	ns
$t_{d(I/O-EOC)}$	Delay time, last I/O CLOCK↓ to EOC↓	See Figure 7		1.5	2.2	µs
$t_{d(EOC-DATA)}$	Delay time, EOC↑ to DATA OUT (MSB/LSB)	See Figure 8			100	ns
t_{PZH}, t_{PZL}	Enable time, $\overline{CS}$↓ to DATA OUT (MSB/LSB driven)	See Figure 3		0.7	1.3	µs
t_{PHZ}, t_{PLZ}	Disable time, $\overline{CS}$↑ to DATA OUT (high impedance)	See Figure 3		70	150	ns
$t_{r(EOC)}$	Rise time, EOC	See Figure 8		15	50	ns
$t_{f(EOC)}$	Fall time, EOC	See Figure 7		15	50	ns
$t_{r(bus)}$	Rise time, data bus	See Figure 6		15	50	ns
$t_{f(bus)}$	Fall time, data bus	See Figure 6		15	50	ns
$t_{d(I/O-CS)}$	Delay time, last I/O CLOCK↓ to $\overline{CS}$↓ to abort conversion (see Note 10)				5	µs

† All typical values are at $T_A = 25°C$.

NOTES: 2. Analog input voltages greater than that applied to REF+ convert as all ones (111111111111), while input voltages less than that applied to REF− convert as all zeros (000000000000).
5. Linearity error is the maximum deviation from the best straight line through the A/D transfer characteristics.
6. Gain error is the difference between the actual midstep value and the nominal midstep value in the transfer diagram at the specified gain point after the offset error has been adjusted to zero. Offset error is the difference between the actual midstep value and the nominal midstep value at the offset point.
7. Total unadjusted error comprises linearity, zero-scale, and full-scale errors.
8. Both the input address and the output codes are expressed in positive logic.
9. I/O CLOCK period = 1/(I/O CLOCK frequency) (see Figure 7).
10. Any transitions of $\overline{CS}$ are recognized as valid only when the level is maintained for a setup time. $\overline{CS}$ must be taken low at ≤ 5 µs of the tenth I/O CLOCK falling edge to ensure a conversion is aborted. Between 5 µs and 10 µs, the result is uncertain as to whether the conversion is aborted or the conversion results are valid.

PARAMETER MEASUREMENT INFORMATION

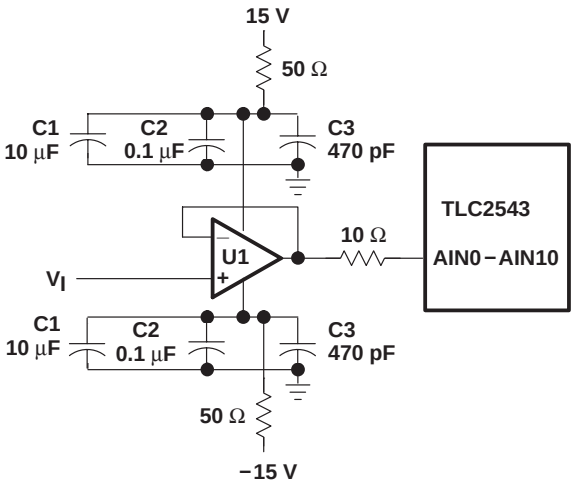

LOCATION	DESCRIPTION	PART NUMBER
U1	OP27	—
C1	10-μF 35-V tantalum capacitor	—
C2	0.1-μF ceramic NPO SMD capacitor	AVX 12105C104KA105 or equivalent
C3	470-pF porcelain Hi-Q SMD capacitor	Johanson 201S420471JG4L or equivalent

Figure 1. Analog Input Buffer to Analog Inputs AIN0 − AIN10

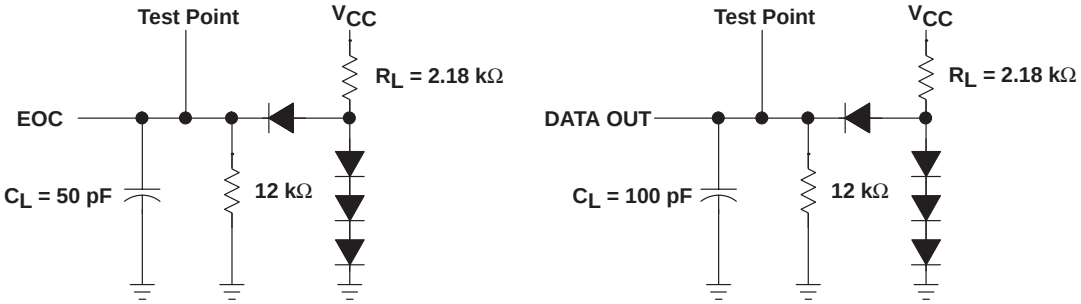

Figure 2. Load Circuits

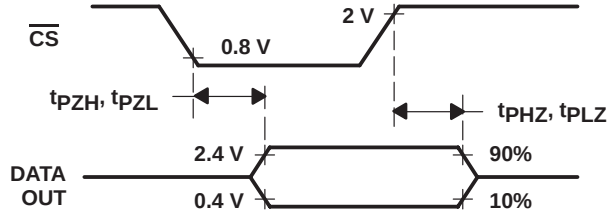

Figure 3. DATA OUT to Hi-Z Voltage Waveforms

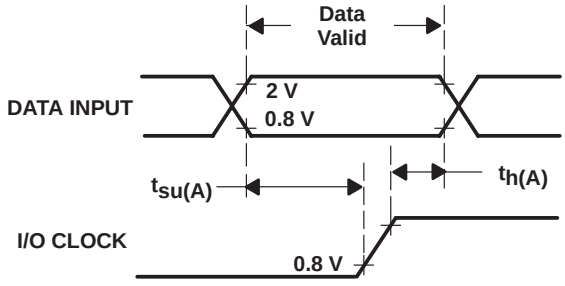

Figure 4. DATA INPUT and I/O CLOCK Voltage Waveforms

PARAMETER MEASUREMENT INFORMATION

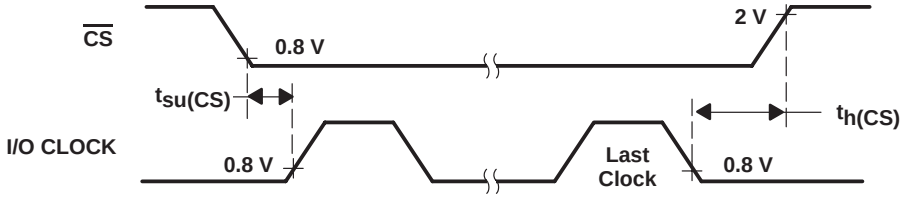

NOTE A: To ensure full conversion accuracy, it is recommended that no input signal change occurs while a conversion is ongoing.

Figure 5. $\overline{CS}$ and I/O CLOCK Voltage Waveforms

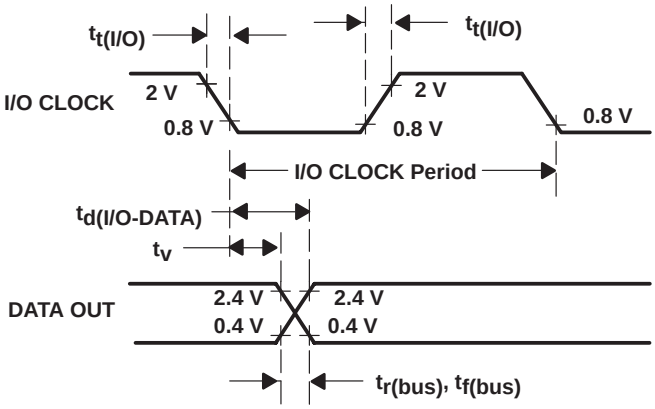

Figure 6. I/O CLOCK and DATA OUT Voltage Waveforms

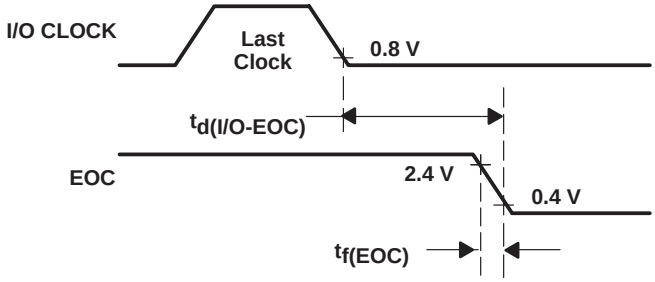

Figure 7. I/O CLOCK and EOC Voltage Waveforms

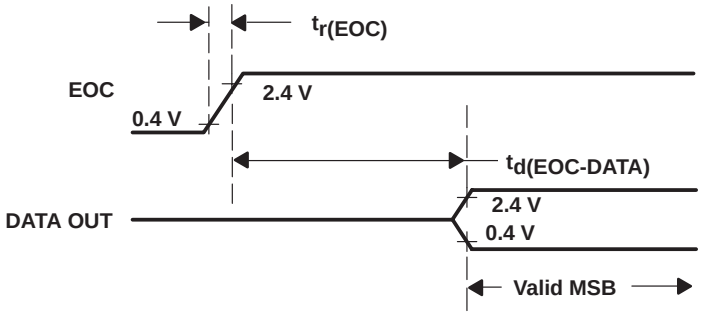

Figure 8. EOC and DATA OUT Voltage Waveforms

PARAMETER MEASUREMENT INFORMATION

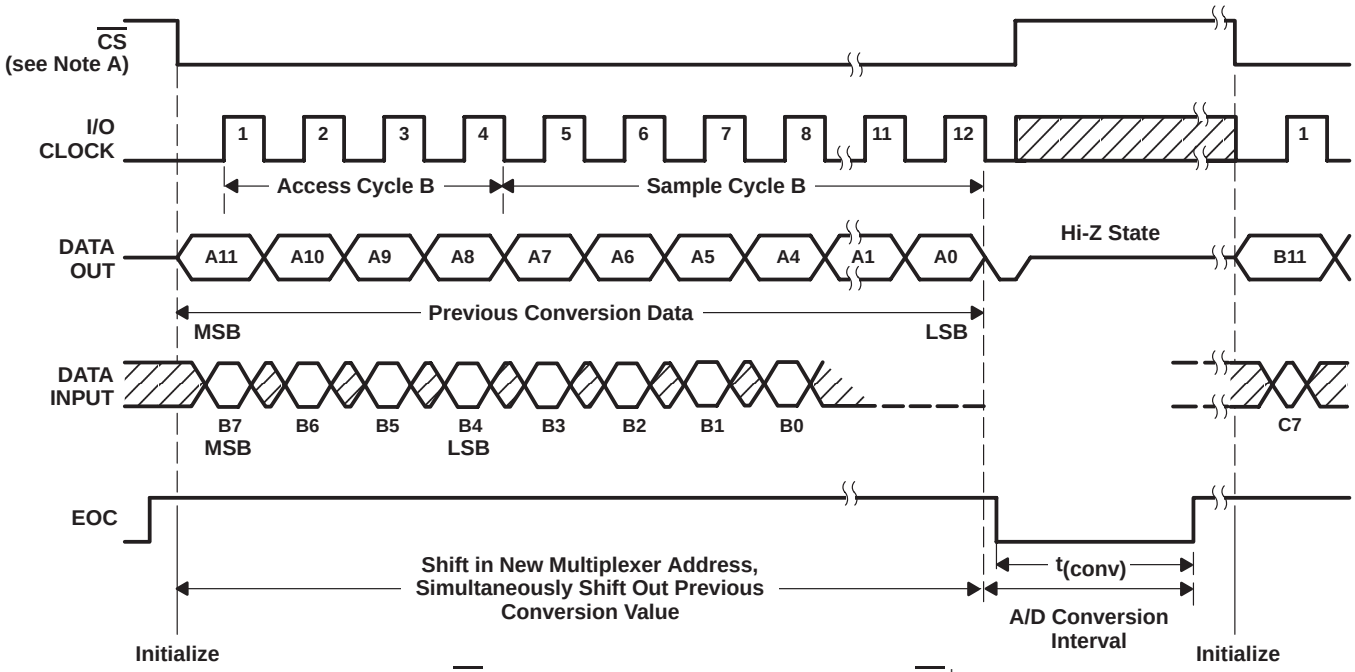

NOTE A: To minimize errors caused by noise at $\overline{CS}$, the internal circuitry waits for a setup time after $\overline{CS}\downarrow$ before responding to control input signals. Therefore, no attempt should be made to clock in an address until the minimum $\overline{CS}$ setup time has elapsed.

Figure 9. Timing for 12-Clock Transfer Using $\overline{CS}$ With MSB First

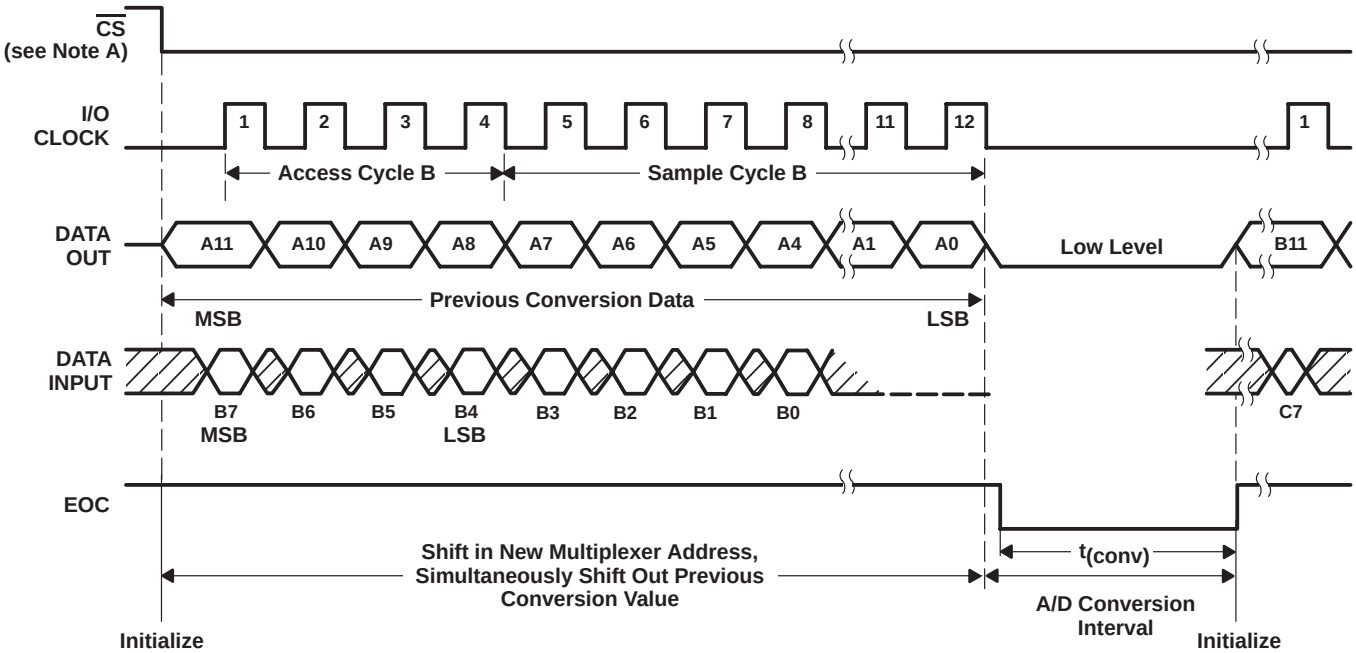

NOTE A: To minimize errors caused by noise at $\overline{CS}$, the internal circuitry waits for a setup time after $\overline{CS}\downarrow$ before responding to control input signals. Therefore, no attempt should be made to clock in an address until the minimum $\overline{CS}$ setup time has elapsed.

Figure 10. Timing for 12-Clock Transfer Not Using $\overline{CS}$ With MSB First

PARAMETER MEASUREMENT INFORMATION

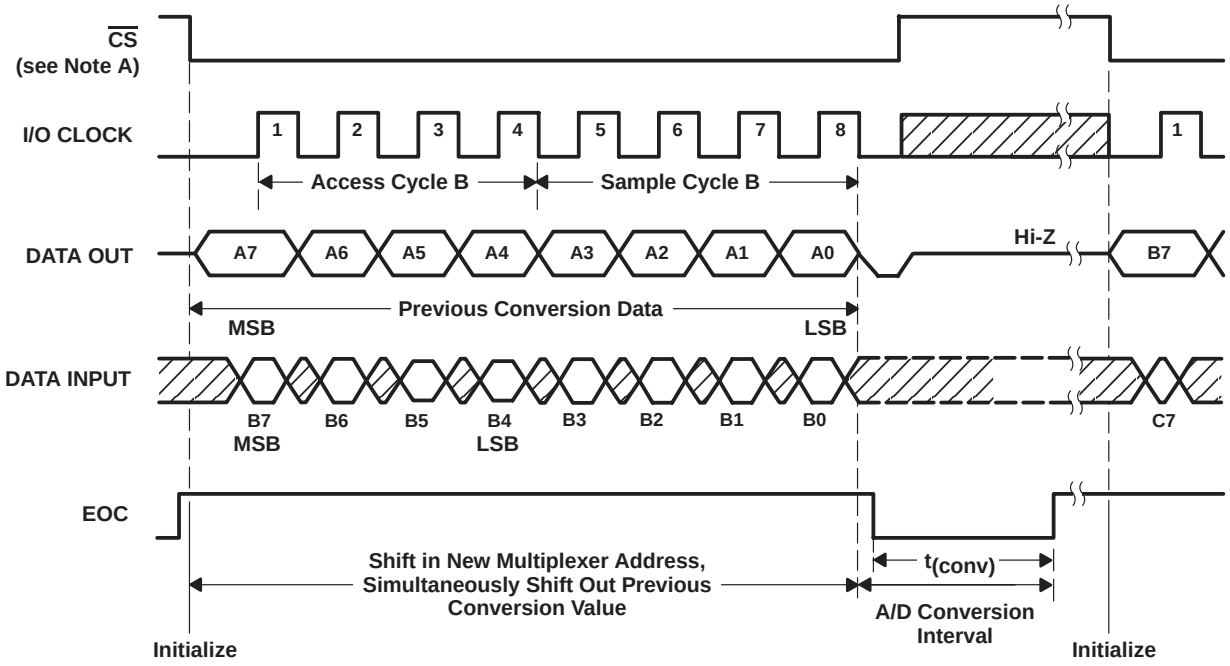

NOTE A: To minimize errors caused by noise at $\overline{CS}$, the internal circuitry waits for a setup time after $\overline{CS}\downarrow$ before responding to control input signals. Therefore, no attempt should be made to clock in an address until the minimum $\overline{CS}$ setup time has elapsed.

Figure 11. Timing for 8-Clock Transfer Using $\overline{CS}$ With MSB First

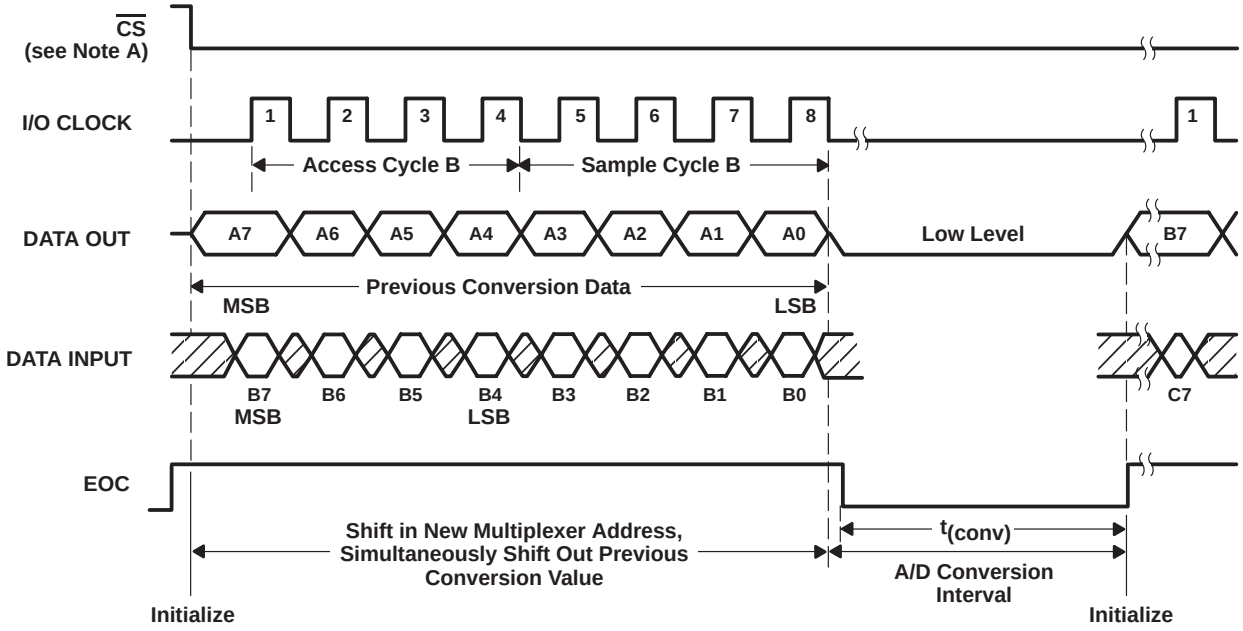

NOTE A: To minimize errors caused by noise at $\overline{CS}$, the internal circuitry waits for a setup time after $\overline{CS}\downarrow$ before responding to control input signals. Therefore, no attempt should be made to clock in an address until the minimum $\overline{CS}$ setup time has elapsed.

Figure 12. Timing for 8-Clock Transfer Not Using $\overline{CS}$ With MSB First

PARAMETER MEASUREMENT INFORMATION

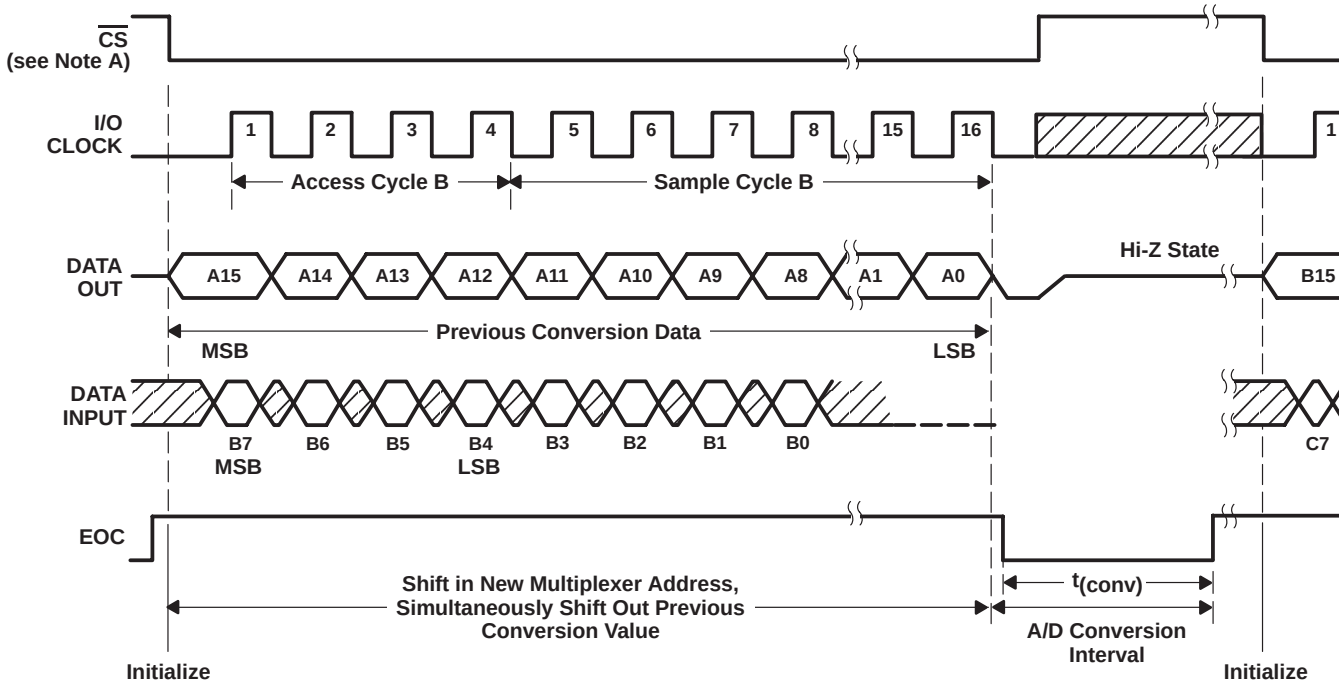

NOTE A: To minimize errors caused by noise at $\overline{CS}$, the internal circuitry waits for a setup time after $\overline{CS}\downarrow$ before responding to control input signals. Therefore, no attempt should be made to clock in an address until the minimum $\overline{CS}$ setup time has elapsed.

Figure 13. Timing for 16-Clock Transfer Using $\overline{CS}$ With MSB First

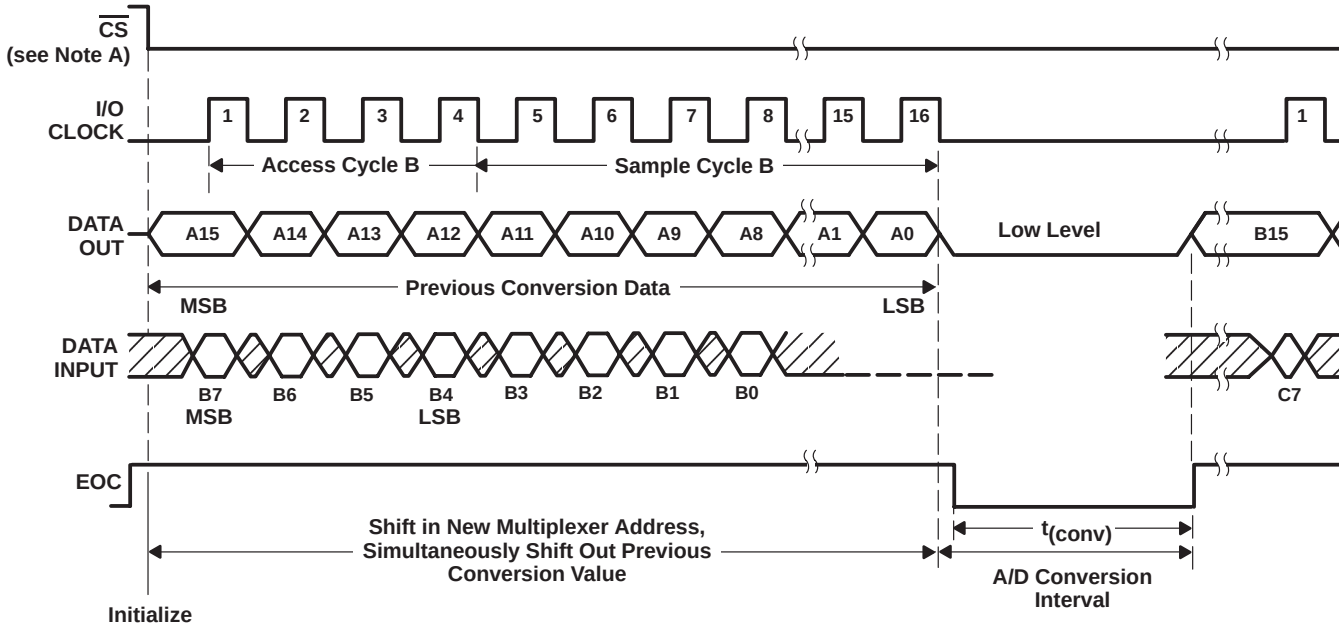

NOTE A: To minimize errors caused by noise at $\overline{CS}$, the internal circuitry waits for a setup time after $\overline{CS}\downarrow$ before responding to control input signals. Therefore, no attempt should be made to clock in an address until the minimum $\overline{CS}$ setup time has elapsed.

Figure 14. Timing for 16-Clock Transfer Not Using $\overline{CS}$ With MSB First

PRINCIPLES OF OPERATION

Initially, with chip select ($\overline{CS}$) high, I/O CLOCK and DATA INPUT are disabled and DATA OUT is in the high-impedance state. $\overline{CS}$ going low begins the conversion sequence by enabling I/O CLOCK and DATA INPUT and removes DATA OUT from the high-impedance state.

The input data is an 8-bit data stream consisting of a 4-bit analog channel address (D7−D4), a 2-bit data length select (D3−D2), an output MSB or LSB first bit (D1), and a unipolar or bipolar output select bit (D0) that are applied to DATA INPUT. The I/O CLOCK sequence applied to the I/O CLOCK terminal transfers this data to the input data register.

During this transfer, the I/O CLOCK sequence also shifts the previous conversion result from the output data register to DATA OUT. The I/O CLOCK receives the input sequence of 8, 12, or 16 clock cycles long depending on the data-length selection in the input data register. Sampling of the analog input begins on the fourth falling edge of the input I/O CLOCK sequence and is held after the last falling edge of the I/O CLOCK sequence. The last falling edge of the I/O CLOCK sequence also takes EOC low and begins the conversion.

converter operation

The operation of the converter is organized as a succession of two distinct cycles: 1) the I/O cycle and 2) the actual conversion cycle.

I/O cycle

The I/O cycle is defined by the externally provided I/O CLOCK and lasts 8, 12, or 16 clock periods, depending on the selected output data length.

During the I/O cycle, the following two operations take place simultaneously.

An 8-bit data stream consisting of address and control information is provided to DATA INPUT. This data is shifted into the device on the rising edge of the first eight I/O CLOCKs. DATA INPUT is ignored after the first eight clocks during 12- or 16-clock I/O transfers.

The data output, with a length of 8, 12, or 16 bits, is provided serially on DATA OUT. When $\overline{CS}$ is held low, the first output data bit occurs on the rising edge of EOC. When $\overline{CS}$ is negated between conversions, the first output data bit occurs on the falling edge of $\overline{CS}$. This data is the result of the previous conversion period, and after the first output data bit, each succeeding bit is clocked out on the falling edge of each succeeding I/O CLOCK.

conversion cycle

The conversion cycle is transparent to the user and it is controlled by an internal clock synchronized to I/O CLOCK. During the conversion period, the device performs a successive-approximation conversion on the analog input voltage. The EOC output goes low at the start of the conversion cycle and goes high when conversion is complete and the output data register is latched. A conversion cycle is started only after the I/O cycle is completed, which minimizes the influence of external digital noise on the accuracy of the conversion.

PRINCIPLES OF OPERATION

power up and initialization

After power up, $\overline{CS}$ must be taken from high to low to begin an I/O cycle. EOC is initially high, and the input data register is set to all zeroes. The contents of the output data register are random and the first conversion result should be ignored. To initialize during operation, $\overline{CS}$ is taken high and is then returned low to begin the next I/O cycle. The first conversion after the device has returned from the power-down state may not read accurately due to internal device settling.

Table 1. Operational Terminology

Current (N) I/O cycle	The entire I/O CLOCK sequence that transfers address and control data into the data register and clocks the digital result from the previous conversion from DATA OUT.
Current (N) conversion cycle	The conversion cycle starts immediately after the current I/O cycle. The end of the current I/O cycle is the last clock falling edge in the I/O CLOCK sequence. The current conversion result is loaded into the output register when conversion is complete.
Current (N) conversion result	The current conversion result is serially shifted out on the next I/O cycle.
Previous (N − 1) conversion cycle	The conversion cycle just prior to the current I/O cycle.
Next (N + 1) I/O cycle	The I/O period that follows the current conversion cycle.

Example: In the 12-bit mode, the result of the current conversion cycle is a 12-bit serial-data stream clocked out during the next I/O cycle. The current I/O cycle must be exactly 12 bits long to maintain synchronization, even when this corrupts the output data from the previous conversion. The current conversion is begun immediately after the twelfth falling edge of the current I/O cycle.

PRINCIPLES OF OPERATION

data input

The data input is internally connected to an 8-bit serial-input address and control register. The register defines the operation of the converter and the output data length. The host provides the data word with the MSB first. Each data bit is clocked in on the rising edge of the I/O CLOCK sequence (see Table 2 for the data input-register format).

Table 2. Input-Register Format

FUNCTION SELECT	INPUT DATA BYTE							
	ADDRESS BITS				L1	L0	LSBF	BIP
	D7 (MSB)	D6	D5	D4	D3	D2	D1	D0 (LSB)
Select input channel								
AIN0	0	0	0	0				
AIN1	0	0	0	1				
AIN2	0	0	1	0				
AIN3	0	0	1	1				
AIN4	0	1	0	0				
AIN5	0	1	0	1				
AIN6	0	1	1	0				
AIN7	0	1	1	1				
AIN8	1	0	0	0				
AIN9	1	0	0	1				
AIN10	1	0	1	0				
Select test voltage								
$(V_{ref+} - V_{ref-})/2$	1	0	1	1				
V_{ref-}	1	1	0	0				
V_{ref+}	1	1	0	1				
Software power down	1	1	1	0				
Output data length								
8 bits					0	1		
12 bits					X†	0		
16 bits					1	1		
Output data format								
MSB first							0	
LSB first (LSBF)							1	
Unipolar (binary)								0
Bipolar (BIP) 2s complement								1

† X represents a do not care condition.

data input address bits

The four MSBs (D7 − D4) of the data register address one of the 11 input channels, a reference-test voltage, or the power-down mode. The address bits affect the current conversion, which is the conversion that immediately follows the current I/O cycle. The reference voltage is nominally equal to $V_{ref+} - V_{ref-}$.

PRINCIPLES OF OPERATION

data output length

The next two bits (D3 and D2) of the data register select the output data length. The data-length selection is valid for the current I/O cycle (the cycle in which the data is read). The data-length selection, being valid for the current I/O cycle, allows device start-up without losing I/O synchronization. A data length of 8, 12, or 16 bits can be selected. Since the converter has 12-bit resolution, a data length of 12 bits is suggested.

With D3 and D2 set to 00 or 10, the device is in the 12-bit data-length mode and the result of the current conversion is output as a 12-bit serial data stream during the next I/O cycle. The current I/O cycle must be exactly 12 bits long for proper synchronization, even when this means corrupting the output data from a previous conversion. The current conversion is started immediately after the twelfth falling edge of the current I/O cycle.

With bits D3 and D2 set to 11, the 16-bit data-length mode is selected, which allows convenient communication with 16-bit serial interfaces. In the 16-bit mode, the result of the current conversion is output as a 16-bit serial data stream during the next I/O cycle with the four LSBs always reset to 0 (pad bits). The current I/O cycle must be exactly 16 bits long to maintain synchronization even when this means corrupting the output data from the previous conversion. The current conversion is started immediately after the sixteenth falling edge of the current I/O cycle.

With bits D3 and D2 set to 01, the 8-bit data-length mode is selected, which allows fast communication with 8-bit serial interfaces. In the 8-bit mode, the result of the current conversion is output as an 8-bit serial data stream during the next I/O cycle. The current I/O cycle must be exactly eight bits long to maintain synchronization, even when this means corrupting the output data from the previous conversion. The four LSBs of the conversion result are truncated and discarded. The current conversion is started immediately after the eighth falling edge of the current I/O cycle.

Since D3 and D2 take effect on the current I/O cycle when the data length is programmed, there can be a conflict with the previous cycle when the data-word length is changed from one cycle to the next. This may occur when the data format is selected to be least significant bit first, since at the time the data length change becomes effective (six rising edges of I/O CLOCK), the previous conversion result has already started shifting out.

In actual operation, when different data lengths are required within an application and the data length is changed between two conversions, no more than one conversion result can be corrupted and only when it is shifted out in LSB-first format.

sampling period

During the sampling period, one of the analog inputs is internally connected to the capacitor array of the converter to store the analog input signal. The converter starts sampling the selected input immediately after the four address bits have been clocked into the input data register. Sampling starts on the fourth falling edge of I/O CLOCK. The converter remains in the sampling mode until the 8th, 12th, or 16th falling edge of the I/O CLOCK depending on the data-length selection. After the EOC delay time from the last I/O CLOCK falling edge, the EOC output goes low indicating that the sampling period is over and the conversion period has begun. After EOC goes low, the analog input can be changed without affecting the conversion result. Since the delay from the falling edge of the last I/O CLOCK to EOC low is fixed, time-varying analog input signals can be digitized at a fixed rate without introducing systematic harmonic distortion or noise due to timing uncertainty.

After the 8-bit data stream has been clocked in, DATA INPUT should be held at a fixed digital level until EOC goes high (indicating that the conversion is complete) to maximize the sampling accuracy and minimize the influence of external digital noise.

PRINCIPLES OF OPERATION

data register, LSB first

D1 in the input data register (LSB first) controls the direction of the output binary data transfer. When D1 is reset to 0, the conversion result is shifted out MSB first. When set to 1, the data is shifted out LSB first. Selection of MSB first or LSB first always affects the next I/O cycle and not the current I/O cycle. When changing from one data direction to another, the current I/O cycle is never disrupted.

data register, bipolar format

D0 (BIP) in the input data register controls the binary data format used to represent the conversion result. When D0 is cleared to 0, the conversion result is represented as unipolar (unsigned binary) data. Nominally, the conversion result of an input voltage equal to V_{ref-} is a code of all zeros (000 . . . 0), the conversion result of an input voltage equal to V_{ref+} is a code of all ones (111 . . . 1), and the conversion result of $(V_{ref+} + V_{ref-})/2$ is a code of a one followed by zeros (100 . . . 0).

When D0 is set to 1, the conversion result is represented as bipolar (signed binary) data. Nominally, conversion of an input voltage equal to V_{ref-} is a code of a one followed by zeros (100 . . . 0), conversion of an input voltage equal to V_{ref+} is a code of a zero followed by all ones (011 . . . 1), and the conversion of $(V_{ref+} + V_{ref-})/2$ is a code of all zeros (000 . . . 0). The MSB is interpreted as the sign bit. The bipolar data format is related to the unipolar format in that the MSBs are always each other's complement.

Selection of the unipolar or bipolar format always affects the current conversion cycle, and the result is output during the next I/O cycle. When changing between unipolar and bipolar formats, the data output during the current I/O cycle is not affected.

EOC output

The EOC signal indicates the beginning and the end of conversion. In the reset state, EOC is always high. During the sampling period (beginning after the fourth falling edge of the I/O CLOCK sequence), EOC remains high until the internal sampling switch of the converter is safely opened. The opening of the sampling switch occurs after the 8th, 12th, or 16th I/O CLOCK falling edge, depending on the data-length selection in the input data register. After the EOC signal goes low, the analog input signal can be changed without affecting the conversion result.

The EOC signal goes high again after the conversion is completed and the conversion result is latched into the output data register. The rising edge of EOC returns the converter to a reset state and a new I/O cycle begins. On the rising edge of EOC, the first bit of the current conversion result is on DATA OUT when $\overline{CS}$ is low. When $\overline{CS}$ is negated between conversions, the first bit of the current conversion result occurs at DATA OUT on the falling edge of $\overline{CS}$.

data format and pad bits

D3 and D2 of the input data register determine the number of significant bits in the digital output that represent the conversion result. The LSB-first bit determines the direction of the data transfer, while the BIP bit determines the arithmetic conversion. The numerical data is always justified toward the MSB in any output format.

The internal conversion result is always 12 bits long. When an 8-bit data transfer is selected, the four LSBs of the internal result are discarded to provide a faster one-byte transfer. When a 12-bit transfer is used, all bits are transferred. When a 16-bit transfer is used, four LSB pad bits are always appended to the internal conversion result. In the LSB-first mode, four leading zeros are output. In the MSB-first mode, the last four bits output are zeros.

PRINCIPLES OF OPERATION

data format and pad bits (continued)

When $\overline{CS}$ is held low continuously, the first data bit of the newly completed conversion occurs on DATA OUT on the rising edge of EOC. When a new conversion is started after the last falling edge of I/O CLOCK, EOC goes low and the serial output is forced to a setting of 0 until EOC goes high again.

When $\overline{CS}$ is negated between conversions, the first data bit occurs on DATA OUT on the falling edge of $\overline{CS}$. On each subsequent falling edge of I/O CLOCK after the first data bit appears, the data is changed to the next bit in the serial conversion result until the required number of bits has been output.

chip-select input ($\overline{CS}$)

$\overline{CS}$ enables and disables the device. During normal operation, $\overline{CS}$ should be low. Although the use of $\overline{CS}$ is not necessary to synchronize a data transfer, it can be brought high between conversions to coordinate the data transfer of several devices sharing the same bus.

When $\overline{CS}$ is brought high, the serial-data output is immediately brought to the high-impedance state, releasing its output data line to other devices that may share it. After an internally generated debounce time, I/O CLOCK is inhibited, thus preventing any further change in the internal state.

When $\overline{CS}$ is subsequently brought low again, the device is reset. $\overline{CS}$ must be held low for an internal debounce time before the reset operation takes effect. After $\overline{CS}$ is debounced low, I/O CLOCK must remain inactive (low) for a minimum time before a new I/O cycle can start.

$\overline{CS}$ can interrupt any ongoing data transfer or any ongoing conversion. When $\overline{CS}$ is debounced low long enough before the end of the current conversion cycle, the previous conversion result is saved in the internal output buffer and shifted out during the next I/O cycle.

power-down features

When a binary address of 1110 is clocked into the input data register during the first four I/O CLOCK cycles, the power-down mode is selected. Power down is activated on the falling edge of the fourth I/O CLOCK pulse.

During power down, all internal circuitry is put in a low-current standby mode. No conversions are performed, and the internal output buffer keeps the previous conversion cycle data results provided that all digital inputs are held above V_{CC} − 0.5 V or below 0.5 V. The I/O logic remains active so the current I/O cycle must be completed even when the power-down mode is selected. Upon power-on reset and before the first I/O cycle, the converter normally begins in the power-down mode. The device remains in the power-down mode until a valid input address (other than 1110) is clocked in. Upon completion of that I/O cycle, a normal conversion is performed with the results being shifted out during the next I/O cycle.

PRINCIPLES OF OPERATION

analog input, test, and power-down mode

The 11 analog inputs, three internal voltages, and power-down mode are selected by the input multiplexer according to the input addresses shown in Table 3, Table 4, and Table 5. The input multiplexer is a break-before-make type to reduce input-to-input noise rejection resulting from channel switching. Sampling of the analog input starts on the falling edge of the fourth I/O CLOCK and continues for the remaining I/O CLOCK pulses. The sample is held on the falling edge of the last I/O CLOCK pulse. The three internal test inputs are applied to the multiplexer, then sampled and converted in the same manner as the external analog inputs. The first conversion after the device has returned from the power-down state may not read accurately due to internal device settling.

Table 3. Analog-Channel-Select Address

ANALOG INPUT SELECTED	VALUE SHIFTED INTO DATA INPUT	
	BINARY	HEX
AIN0	0000	0
AIN1	0001	1
AIN2	0010	2
AIN3	0011	3
AIN4	0100	4
AIN5	0101	5
AIN6	0110	6
AIN7	0111	7
AIN8	1000	8
AIN9	1001	9
AIN10	1010	A

Table 4. Test-Mode-Select Address

INTERNAL SELF-TEST VOLTAGE SELECTED†	VALUE SHIFTED INTO DATA INPUT		UNIPOLAR OUTPUT RESULT (HEX)‡
	BINARY	HEX	
$\frac{V_{ref+} - V_{ref-}}{2}$	1011	B	800
V_{ref-}	1100	C	000
V_{ref+}	1101	D	FFF

† V_{ref+} is the voltage applied to REF+, and V_{ref-} is the voltage applied to REF−.
‡ The output results shown are the ideal values and may vary with the reference stability and with internal offsets.

Table 5. Power-Down-Select Address

INPUT COMMAND	VALUE SHIFTED INTO DATA INPUT		RESULT
	BINARY	HEX	
Power down	1110	E	$I_{CC} \leq 25\ \mu A$

PRINCIPLES OF OPERATION

converter and analog input

The CMOS threshold detector in the successive-approximation conversion system determines each bit by examining the charge on a series of binary-weighted capacitors (see Figure 1). In the first phase of the conversion process, the analog input is sampled by closing the S_C switch and all S_T switches simultaneously. This action charges all the capacitors to the input voltage.

In the next phase of the conversion process, all S_T and S_C switches are opened and the threshold detector begins identifying bits by identifying the charge (voltage) on each capacitor relative to the reference (REF−) voltage. In the switching sequence, 12 capacitors are examined separately until all 12 bits are identified and the charge-convert sequence is repeated. In the first step of the conversion phase, the threshold detector looks at the first capacitor (weight = 4096). Node 4096 of this capacitor is switched to the REF+ voltage, and the equivalent nodes of all the other capacitors on the ladder are switched to REF−. When the voltage at the summing node is greater than the trip point of the threshold detector (approximately 1/2 V_{CC}), a bit 0 is placed in the output register and the 4096-weight capacitor is switched to REF−. When the voltage at the summing node is less than the trip point of the threshold detector, a bit 1 is placed in the register and this 4096-weight capacitor remains connected to REF+ through the remainder of the successive-approximation process. The process is repeated for the 2048-weight capacitor, the 1024-weight capacitor, and so forth down the line until all bits are determined. With each step of the successive-approximation process, the initial charge is redistributed among the capacitors. The conversion process relies on charge redistribution to determine the bits from MSB to LSB.

reference voltage inputs

The two reference inputs used with the device are the voltages applied to the REF+ and REF− terminals. These voltage values establish the upper and lower limits of the analog input to produce a full-scale and zero-scale reading respectively. These voltages and the analog input should not exceed the positive supply or be lower than ground consistent with the specified absolute maximum ratings. The digital output is at full scale when the input signal is equal to or higher than REF+ terminal voltage and at zero when the input signal is equal to or lower than REF− terminal voltage.

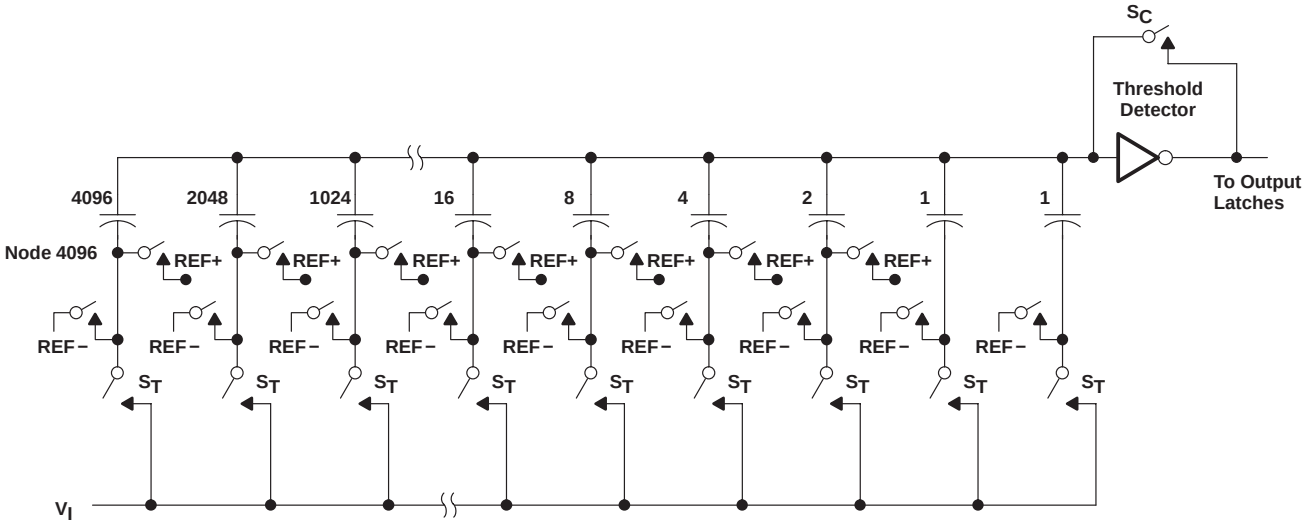

Figure 15. Simplified Model of the Successive-Approximation System

APPLICATION INFORMATION

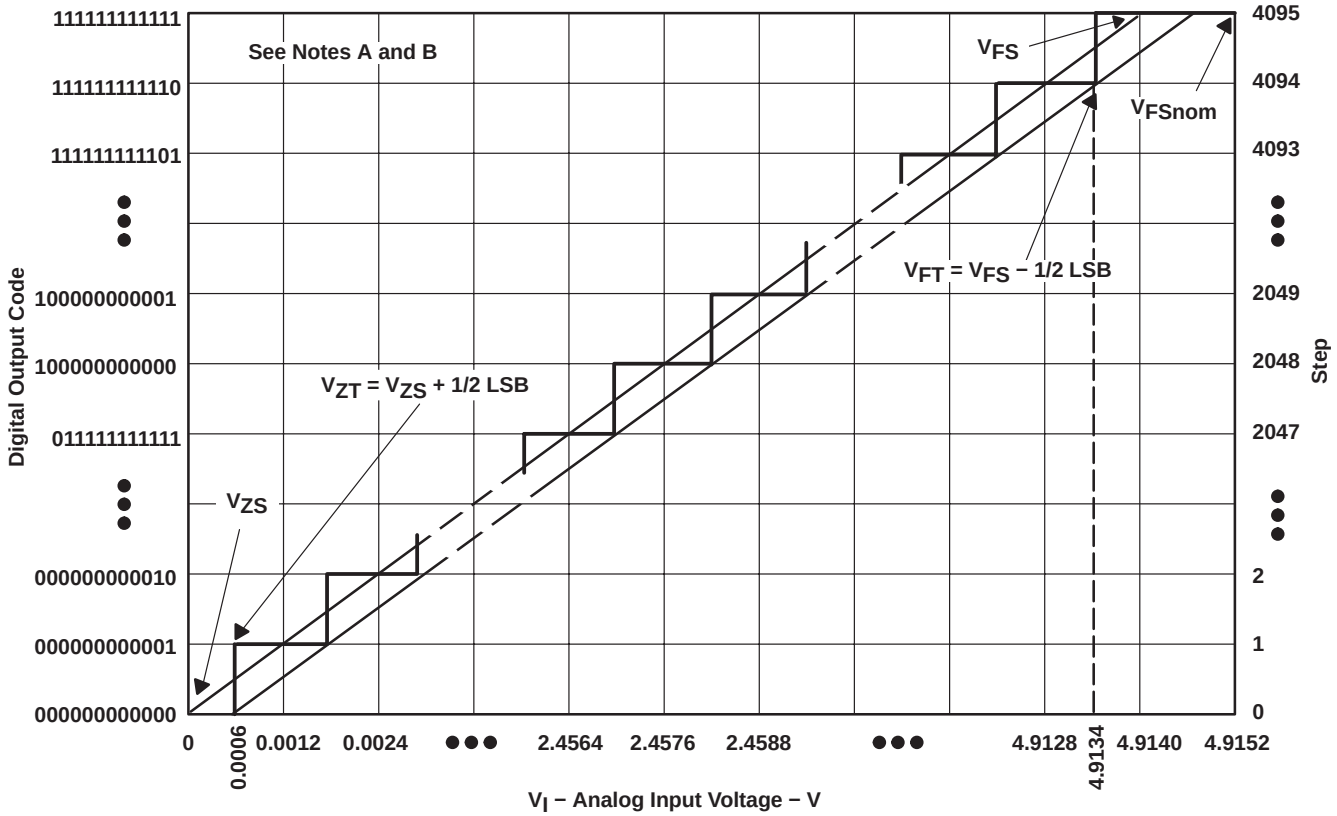

NOTES: A. This curve is based on the assumption that V_{ref+} and V_{ref-} have been adjusted so that the voltage at the transition from digital 0 to 1 (V_{ZT}) is 0.0006 V and the transition to full scale (V_{FT}) is 4.9134 V. 1 LSB = 1.2 mV.

B. The full-scale value (V_{FS}) is the step whose nominal midstep value has the highest absolute value. The zero-scale value (V_{ZS}) is the step whose nominal midstep value equals zero.

Figure 16. Ideal Conversion Characteristics

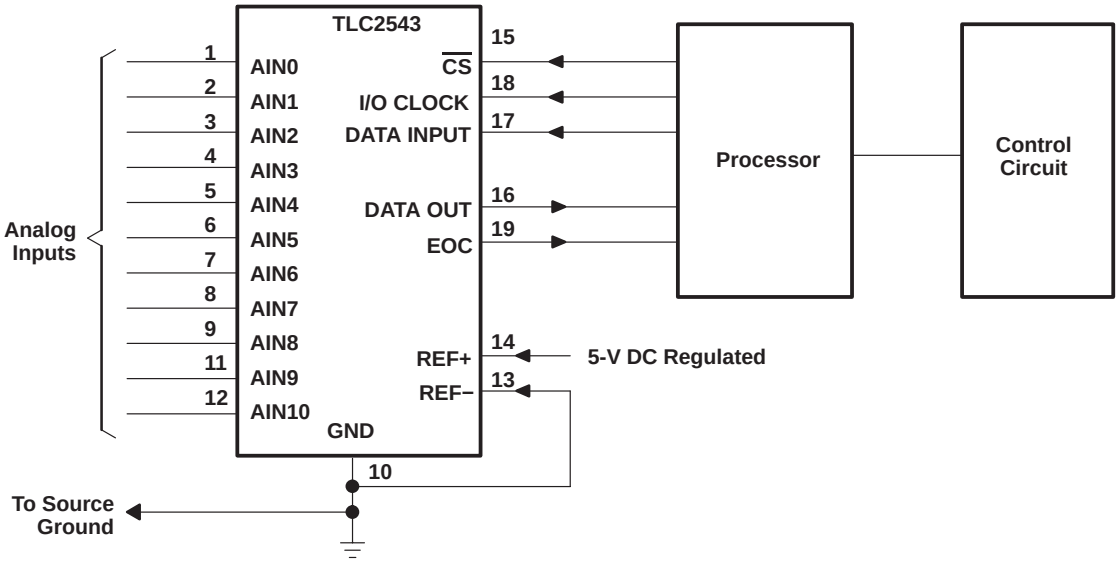

Figure 17. Serial Interface

APPLICATION INFORMATION

simplified analog input analysis

Using the equivalent circuit in Figure 18, the time required to charge the analog input capacitance from 0 V to V_S within 1/2 LSB can be derived as follows:

The capacitance charging voltage is given by:

$$V_C = V_S\left(1-e^{-t_c/R_tC_i}\right) \quad (1)$$

Where:

$$R_t = R_S + r_i$$

The final voltage to 1/2 LSB is given by:

$$V_C\ (1/2\ LSB) = V_S - (V_S/8192) \quad (2)$$

Equating equation 1 to equation 2 and solving for time t_c gives:

$$V_S - \left(V_S/8192\right) = V_S\left(1-e^{-t_c/R_tC_i}\right) \quad (3)$$

and

$$t_c\ (1/2\ LSB) = R_t \times C_i \times \ln(8192) \quad (4)$$

Therefore, with the values given, the time for the analog input signal to settle is:

$$t_c\ (1/2\ LSB) = (R_S + 1\ k\Omega) \times 60\ pF \times \ln(8192) \quad (5)$$

This time must be less than the converter sample time shown in the timing diagrams.

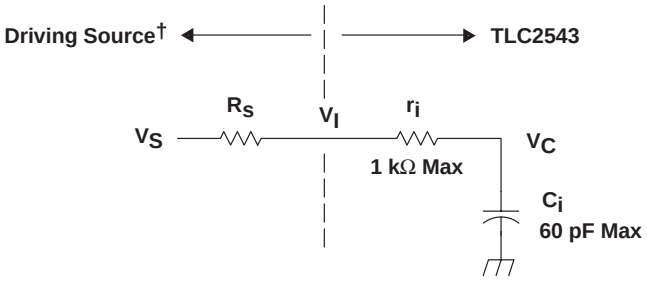

V_I = Input Voltage at AIN
V_S = External Driving Source Voltage
R_S = Source Resistance
r_i = Input Resistance
C_i = Input Capacitance
V_C = Capacitance Charging Voltage

† Driving source requirements:

- Noise and distortion for the source must be equivalent to the resolution of the converter.
- R_S must be real at the input frequency.
- R_S must not exceed 1 kΩ.

Figure 18. Equivalent Input Circuit Including the Driving Source

PACKAGING INFORMATION

Orderable part number	Status (1)	Material type (2)	Package | Pins	Package qty | Carrier	RoHS (3)	Lead finish/ Ball material (4)	MSL rating/ Peak reflow (5)	Op temp (°C)	Part marking (6)
TLC2543IDBRG4Q1	Active	Production	SSOP (DB) | 20	2000 | LARGE T&R	Yes	NIPDAU	Level-2-260C-1 YEAR	-40 to 85	TLC2543Q1
TLC2543IDBRG4Q1.A	Active	Production	SSOP (DB) | 20	2000 | LARGE T&R	Yes	NIPDAU	Level-2-260C-1 YEAR	-40 to 85	TLC2543Q1
TLC2543IDBRQ1	Active	Production	SSOP (DB) | 20	2000 | LARGE T&R	Yes	NIPDAU	Level-2-260C-1 YEAR	-40 to 85	TLC2543Q1
TLC2543IDBRQ1.A	Active	Production	SSOP (DB) | 20	2000 | LARGE T&R	Yes	NIPDAU	Level-2-260C-1 YEAR	-40 to 85	TLC2543Q1

(1) **Status:** For more details on status, see our product life cycle.

(2) **Material type:** When designated, preproduction parts are prototypes/experimental devices, and are not yet approved or released for full production. Testing and final process, including without limitation quality assurance, reliability performance testing, and/or process qualification, may not yet be complete, and this item is subject to further changes or possible discontinuation. If available for ordering, purchases will be subject to an additional waiver at checkout, and are intended for early internal evaluation purposes only. These items are sold without warranties of any kind.

(3) **RoHS values:** Yes, No, RoHS Exempt. See the TI RoHS Statement for additional information and value definition.

(4) **Lead finish/Ball material:** Parts may have multiple material finish options. Finish options are separated by a vertical ruled line. Lead finish/Ball material values may wrap to two lines if the finish value exceeds the maximum column width.

(5) **MSL rating/Peak reflow:** The moisture sensitivity level ratings and peak solder (reflow) temperatures. In the event that a part has multiple moisture sensitivity ratings, only the lowest level per JEDEC standards is shown. Refer to the shipping label for the actual reflow temperature that will be used to mount the part to the printed circuit board.

(6) **Part marking:** There may be an additional marking, which relates to the logo, the lot trace code information, or the environmental category of the part.

Multiple part markings will be inside parentheses. Only one part marking contained in parentheses and separated by a "~" will appear on a part. If a line is indented then it is a continuation of the previous line and the two combined represent the entire part marking for that device.

Important Information and Disclaimer: The information provided on this page represents TI's knowledge and belief as of the date that it is provided. TI bases its knowledge and belief on information provided by third parties, and makes no representation or warranty as to the accuracy of such information. Efforts are underway to better integrate information from third parties. TI has taken and continues to take reasonable steps to provide representative and accurate information but may not have conducted destructive testing or chemical analysis on incoming materials and chemicals. TI and TI suppliers consider certain information to be proprietary, and thus CAS numbers and other limited information may not be available for release.

In no event shall TI's liability arising out of such information exceed the total purchase price of the TI part(s) at issue in this document sold by TI to Customer on an annual basis.

OTHER QUALIFIED VERSIONS OF TLC2543-Q1 :

- Catalog : TLC2543
- Enhanced Product : TLC2543-EP
- Military : TLC2543M

NOTE: Qualified Version Definitions:

- Catalog - TI's standard catalog product
- Enhanced Product - Supports Defense, Aerospace and Medical Applications
- Military - QML certified for Military and Defense Applications

PACKAGE OUTLINE

DB0020A

SSOP - 2 mm max height

SMALL OUTLINE PACKAGE

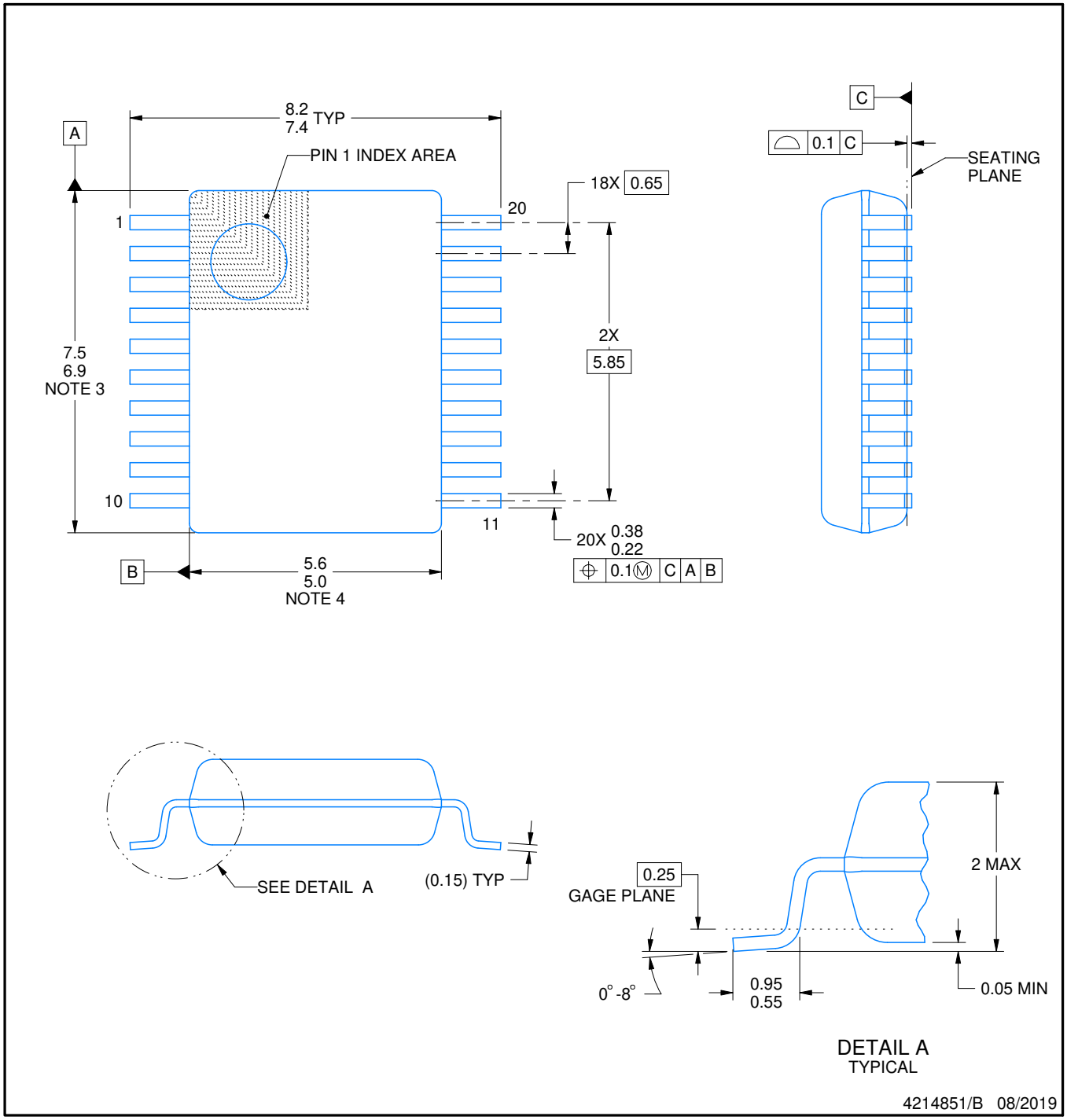

NOTES:

1. All linear dimensions are in millimeters. Any dimensions in parenthesis are for reference only. Dimensioning and tolerancing per ASME Y14.5M.
2. This drawing is subject to change without notice.
3. This dimension does not include mold flash, protrusions, or gate burrs. Mold flash, protrusions, or gate burrs shall not exceed 0.15 mm per side.
4. This dimension does not include interlead flash. Interlead flash shall not exceed 0.25 mm per side.
5. Reference JEDEC registration MO-150.

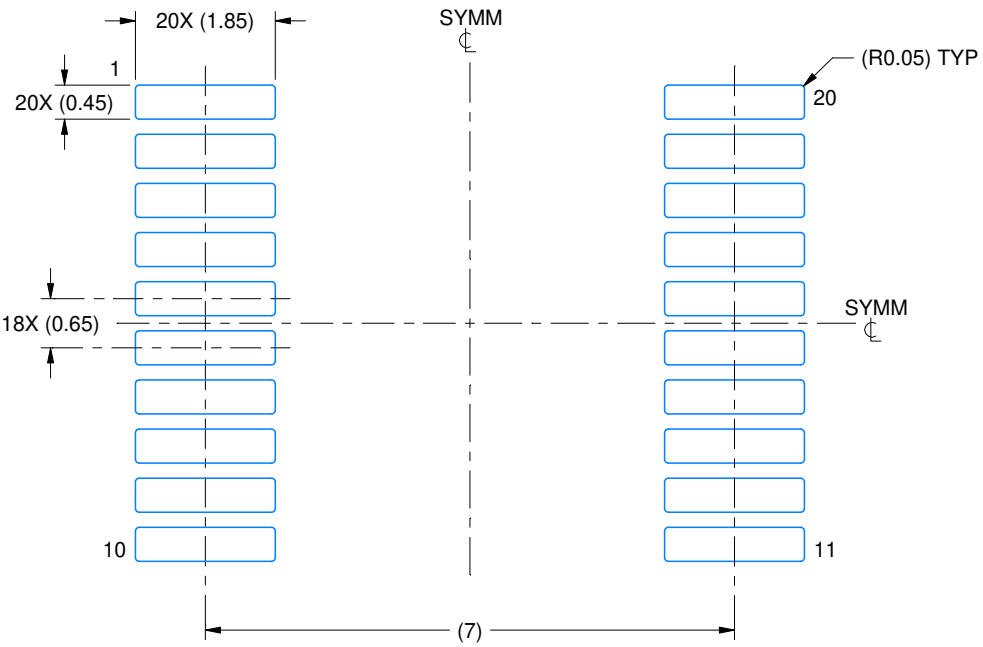

LAND PATTERN EXAMPLE
EXPOSED METAL SHOWN
SCALE: 10X

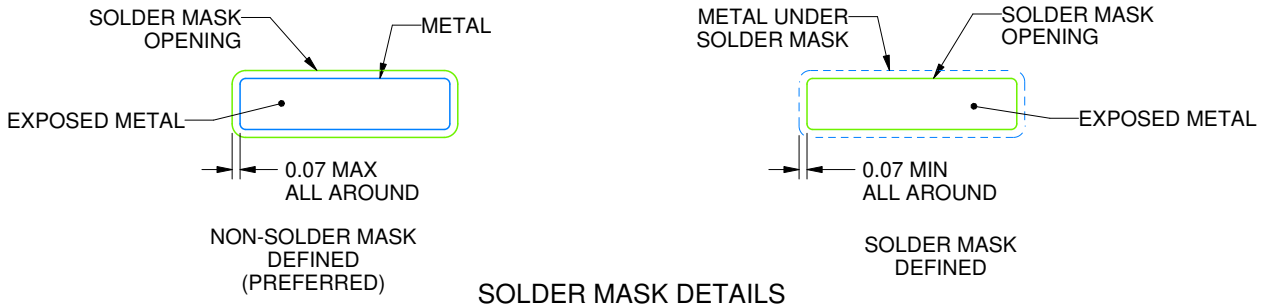

SOLDER MASK DETAILS

4214851/B 08/2019

NOTES: (continued)

6. Publication IPC-7351 may have alternate designs.
7. Solder mask tolerances between and around signal pads can vary based on board fabrication site.

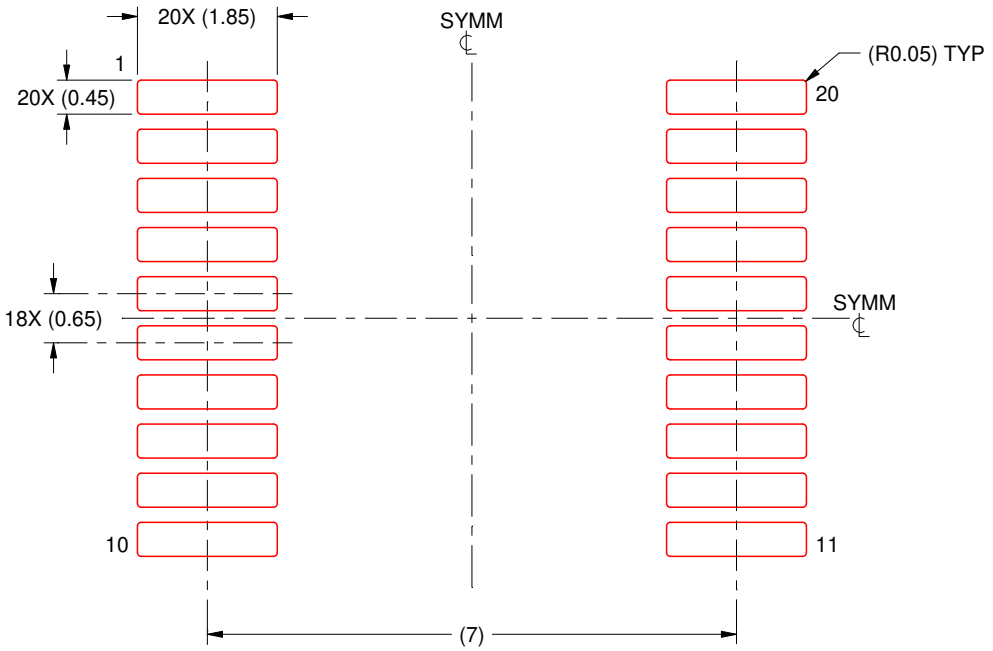

SOLDER PASTE EXAMPLE
BASED ON 0.125 mm THICK STENCIL
SCALE: 10X

4214851/B 08/2019

NOTES: (continued)

8. Laser cutting apertures with trapezoidal walls and rounded corners may offer better paste release. IPC-7525 may have alternate design recommendations.
9. Board assembly site may have different recommendations for stencil design.

IMPORTANT NOTICE AND DISCLAIMER

TI PROVIDES TECHNICAL AND RELIABILITY DATA (INCLUDING DATASHEETS), DESIGN RESOURCES (INCLUDING REFERENCE DESIGNS), APPLICATION OR OTHER DESIGN ADVICE, WEB TOOLS, SAFETY INFORMATION, AND OTHER RESOURCES “AS IS” AND WITH ALL FAULTS, AND DISCLAIMS ALL WARRANTIES, EXPRESS AND IMPLIED, INCLUDING WITHOUT LIMITATION ANY IMPLIED WARRANTIES OF MERCHANTABILITY, FITNESS FOR A PARTICULAR PURPOSE OR NON-INFRINGEMENT OF THIRD PARTY INTELLECTUAL PROPERTY RIGHTS.

These resources are intended for skilled developers designing with TI products. You are solely responsible for (1) selecting the appropriate TI products for your application, (2) designing, validating and testing your application, and (3) ensuring your application meets applicable standards, and any other safety, security, regulatory or other requirements.

These resources are subject to change without notice. TI grants you permission to use these resources only for development of an application that uses the TI products described in the resource. Other reproduction and display of these resources is prohibited. No license is granted to any other TI intellectual property right or to any third party intellectual property right. TI disclaims responsibility for, and you fully indemnify TI and its representatives against any claims, damages, costs, losses, and liabilities arising out of your use of these resources.

TI’s products are provided subject to TI’s Terms of Sale, TI’s General Quality Guidelines, or other applicable terms available either on ti.com or provided in conjunction with such TI products. TI’s provision of these resources does not expand or otherwise alter TI’s applicable warranties or warranty disclaimers for TI products. Unless TI explicitly designates a product as custom or customer-specified, TI products are standard, catalog, general purpose devices.

TI objects to and rejects any additional or different terms you may propose.

Copyright © 2025, Texas Instruments Incorporated

Last updated 10/2025