TLE207x,TLE207xA Excalibur Low-Noise High-Speed Operational Amplifiers

1 Features

- Low offset voltage: ±300µV Typ (TLE2071A)
- Low noise: 17nV/√Hz at 1kHz
- Low bias current: ±15pA
- Wider Supply Rails Increase Dynamic Signal Range to ±19V
- Amplifier operates with differential inputs up to supply rail
- Wide bandwidth: 10MHz GBW, unity-gain stable
- Provides Maximum Noise Floor 17nV/√Hz

2 Applications

- AC charging (pile) station
- AC drive power stage module
- Electricity meter
- Digital multimeter (DMM)
- Flight control unit
- Oscilloscopes & digitizers

3 Description

The TLE207x and TLE207xA family is a family of high voltage amplifiers which offer great DC precision and AC performance. This includes low noise floor and high slew rate, making TLE207x and TLE207xA family a flexible, high-performance amplifier. TLE207x and TLE207xA devices are great option for the following applications:

1. High speed data acquisition
2. Low-power audio processing
3. Portable and battery-powered devices

TLE207x and TLE207xA is available in standard packages PDIP and SOIC. The TLE207xM and TLE207xAM devices use the original design with JFET-input transistors and On-chip Zener trimming of offset voltage. The TLE207xM, TLE207xAM are available in CDIP, LCCC, and CFP For more information on packaging, see Section 10

Device Information

PART NUMBER(1)	CHANNEL COUNT	PACKAGE	PACKAGE SIZE(2)
TLE2071	Single	D (SOIC, 8)	4.9mm × 6mm
		FK (LCCC, 20)	8.89mm × 8.89mm
		JG (CDIP, 8)	9.58mm × 7.62mm
		P (PDIP, 8)	9.59mm × 7.94mm
		U (CDP, 10)	6.86mm × 22.4mm
TLE2072	Dual	D (SOIC, 8)	4.9mm × 6mm
		FK (LCCC, 20)	8.89mm × 8.89mm
		JG (CDIP, 8)	9.58mm × 7.62mm
		P (PDIP, 8)	9.59mm × 7.94mm
		U (CDP, 10)	6.86mm × 22.4mm
TLE2074	Quad	DW (SOIC, 14)	10.3mm × 10.3mm
		FK (LCCC, 20)	8.89mm × 8.89mm
		J (CDIP, 14)	19.6mm × 7.9mm
		N (PDIP, 14)	19.3mm × 7.94mm

(1) For all available packages, see the orderable addendum at the end of the data sheet.
(2) The package size (length × width) is a nominal value and includes pins, where applicable.

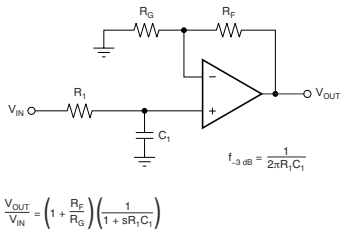

TLE207X and TLE207XA in a Single-Pole, Low-Pass Filter

An IMPORTANT NOTICE at the end of this data sheet addresses availability, warranty, changes, use in safety-critical applications, intellectual property matters and other important disclaimers. PRODUCTION DATA.

Table of Contents

1 Features....1
2 Applications....1
3 Description....1
4 TLE207X Available Options....3
5 Pin Configuration and Functions....4
6 Specifications....7
6.1 Absolute Maximum Ratings....7
6.2 Recommended Operating Conditions....8
6.3 TLE2071C Electrical Characteristics....8
6.4 TLE2071C Operating Characteristics....9
6.5 TLE2071C Electrical Characteristics....9
6.6 TLE2071C Operating Characteristics....10
6.7 TLE2071I Electrical Characteristics....12
6.8 TLE2071I Operating Characteristics....13
6.9 TLE2071I Electrical Characteristics....14
6.10 TLE2071I Operating Characteristics....15
6.11 TLE2071M Electrical Characteristics....16
6.12 TLE2071M Operating Characteristics....17
6.13 TLE2071M Electrical Characteristics....18
6.14 TLE2071M Operating Characteristics....19
6.15 TLE2072C Electrical Characteristics....20
6.16 TLE2072C Operating Characteristics....21
6.17 TLE2072C Electrical Characteristics....22
6.18 TLE2072C Operating Characteristics 15V....23
6.19 TLE2072I Electrical Characteristics....24
6.20 TLE2072I Operating Characteristics....25
6.21 TLE2072I Electrical Characteristics....26
6.22 TLE2072I Operating Characteristics....27
6.23 TLE2072M Electrical Characteristics....28
6.24 TLE2072M Operating Characteristics 5V....29
6.25 TLE2072M Electrical Characteristics....30
6.26 TLE2072M Operating Characteristics....31
6.27 TLE2074C Electrical Characteristics....32
6.28 TLE2074C Operating Characteristics....33
6.29 TLE2074C Electrical Characteristics....34
6.30 TLE2074C Operating Characteristics....35
6.31 TLE2074I Electrical Characteristics....36
6.32 TLE2074I Operating Characteristics....37
6.33 TLE2074I Electrical Characteristics....38
6.34 TLE2074I Operating Characteristics....39
6.35 TLE2074M Electrical Characteristics....40
6.36 TLE2074M Operating Characteristics....41
6.37 TLE2074M Electrical Characteristics....42
6.38 TLE2074M Operating Characteristics....43
6.39 Typical Characteristics....44
7 Application and Implementation....47
7.1 Application Information....47
8 Device and Documentation Support....48
8.1 Receiving Notification of Documentation Updates....48
8.2 Support Resources....48
8.3 Trademarks....48
8.4 Electrostatic Discharge Caution....48
8.5 Glossary....48
9 Revision History....48
10 Mechanical, Packaging, and Orderable Information....49

Copyright © 2026 Texas Instruments Incorporated

4 TLE207X Available Options

Table 4-1. TLE2071 Available Options

T_A	V_{IO}max at 25°C	PACKAGED DEVICES				
		SMALL OUTLINE (D)[(1)]	CHIP CARRIER (FK)	CERAMIC DIP (JG)	PLASTIC DIP (P)	CERAMIC FLAT PACK (U)
0°C to 70°C	2mV	TLE2071ACD	—	—	TLE2071ACP	—
	4mV	TLE2071CD	—	—	TLE2071CP	—
−40°C to 85°C	2mV	TLE2071AID	—	—	TLE2071AIP	—
	4mV	TLE2071ID	—	—	TLE2071IP	—
−55°C to 125°C	2mV	—	TLE2071AMFK	TLE2071AMJG	—	TLE2071AMU
	4mV	—	TLE2071MFK	TLE2071MJG	—	TLE2071MU

(1) The D packages are available taped and reeled. Add R suffix to device type (e.g., TLE2071ACDR).

Table 4-2. TLE2072 Available Options

T_A	V_{IO}max at 25°C	PACKAGED DEVICES				
		SMALL OUTLINE (D)[(1)]	CHIP CARRIER (FK)	CERAMIC DIP (JG)	PLASTIC DIP (P)	CERAMIC FLAT PACK (U)
0°C to 70°C	3.5mV	TLE2072ACD	—	—	TLE2072ACP	—
	6mV	TLE2072CD	—	—	TLE2072CP	—
−40°C to 85°C	3.5mV	TLE2072AID	—	—	TLE2072AIP	—
	6mV	TLE2072ID	—	—	TLE2072IP	—
−55°C to 125°C	3.5mV	—	TLE2072AMFK	TLE2072AMJG	—	TLE2072AMU
	6mV	—	TLE2072MFK	TLE2072MJG	—	TLE2072MU

(1) The D packages are available taped and reeled. Add R suffix to device type (e.g., TLE2072ACDR).

Table 4-3. TLE2074 Available Options

T_A	V_{IO}max at 25°C	PACKAGED DEVICES				
		SMALL OUTLINE (DW)[(1)]	CHIP CARRIER (FK)	CERAMIC DIP (J)	PLASTIC DIP (N)	CERAMIC FLAT PACK (W)
0°C to 70°C	3mV	TLE2074ACDW	—	—	TLE2074ACN	—
	5mV	TLE2074CDW	—	—	TLE2074CN	—
−40°C to 85°C	3mV	TLE2074AIDW	—	—	TLE2074AIN	—
	5mV	TLE2074IDW	—	—	TLE2074IN	—
−55°C to 125°C	3mV	—	TLE2074AMFK	TLE2074AMJ	—	TLE2074AMW
	5mV	—	TLE2074MFK	TLE2074MJ	—	TLE2074MW

(1) The DW packages are available taped and reeled. Add R suffix to device type (e.g., TLE2074ACDWR).

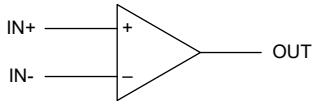

Figure 4-1. Symbol

5 Pin Configuration and Functions

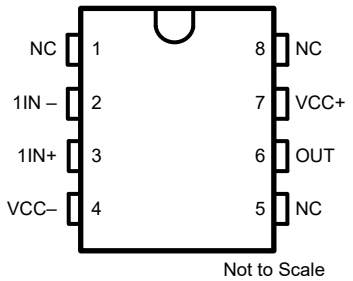

Figure 5-1. TLE2071 and TLE2071A D OR P PACKAGE (Top View)

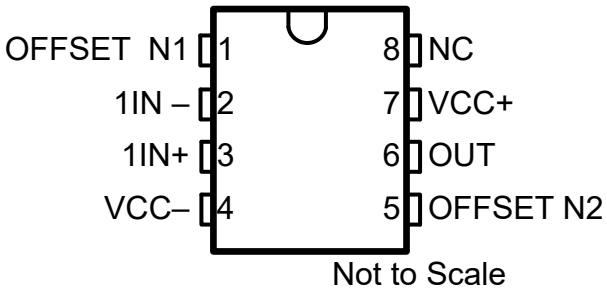

Figure 5-2. TLE2071 and TLE2071A JG PACKAGE (Top View)

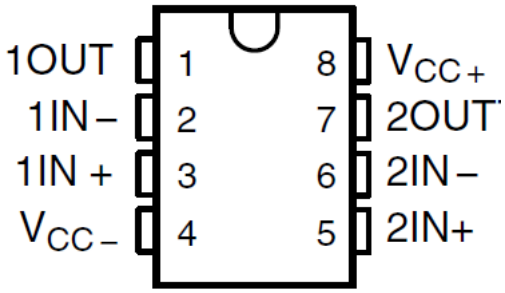

Figure 5-3. TLE2072 and TLE2072A D OR P PACKAGE (Top View)

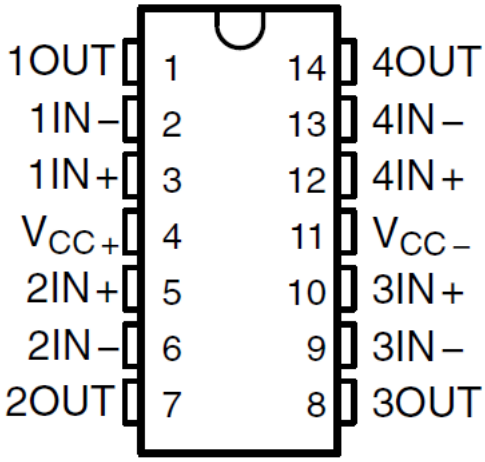

Figure 5-4. TLE2074 and TLE2074A J, N, OR W PACKAGE (Top View)

Copyright © 2026 Texas Instruments Incorporated

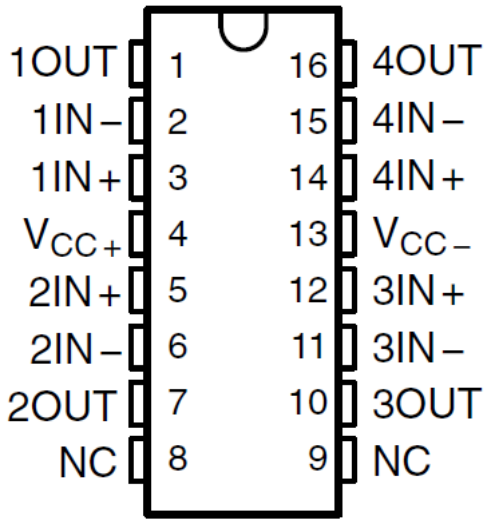

Figure 5-5. TLE2074 and TLE2074A DW PACKAGE (Top View)

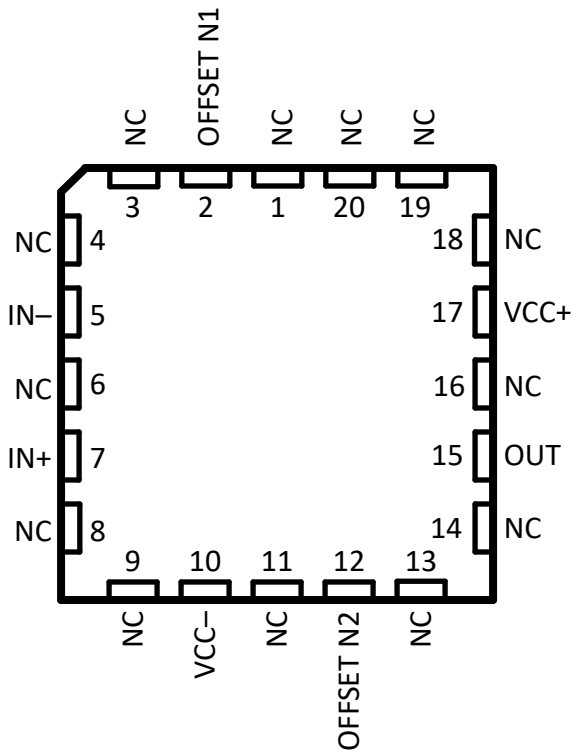

Figure 5-6. TLE2071M and TLE2071AM FK PACKAGE (Top View)

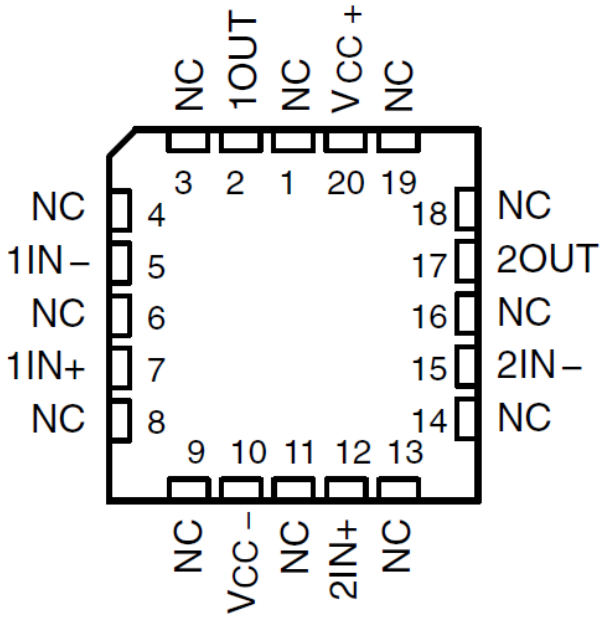

Figure 5-7. TLE2072M and TLE2072AM FK PACKAGE (Top View)

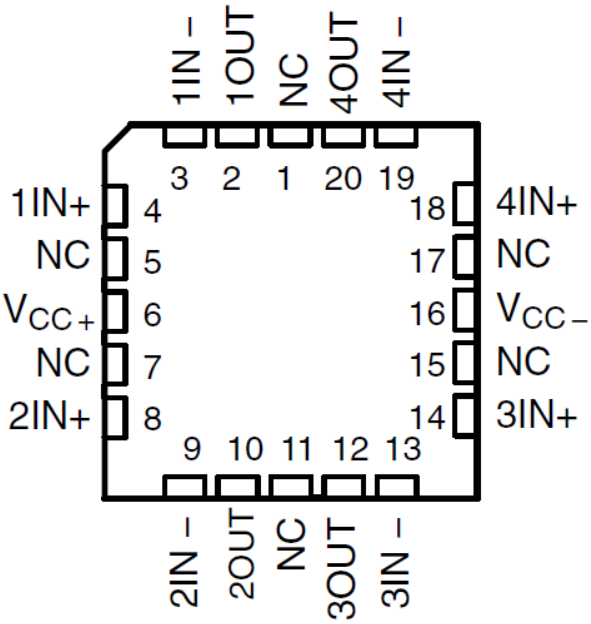

Figure 5-8. TLE2074M and TLE2074AM FK PACKAGE (Top View)

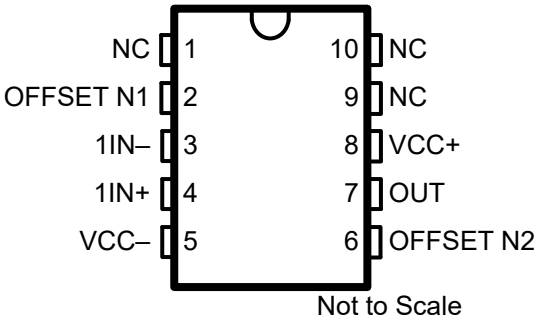

Figure 5-9. TLE2071 AND TLE2071A U Package, (Top View)

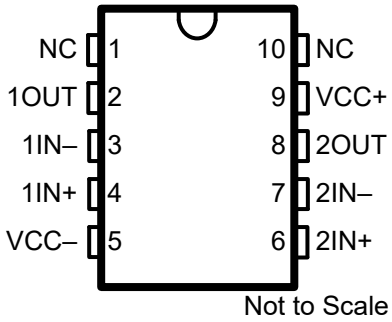

Figure 5-10. TLE2072 AND TLE2072A U Package, (Top View)

Copyright © 2026 Texas Instruments Incorporated

6 Specifications

6.1 Absolute Maximum Ratings

over operating free-air temperature range (unless otherwise noted)[1]

			MIN	MAX	UNIT
V_{CC+}	Supply voltage V_S = (V+) – (V–)		0	38	V
V_{ID}	Differential input voltage range[2]			V_S + 0.2	
V_I	Common-Mode Voltage Input Range			(V–) – 0.5V, (V+) + 0.5V	
I_I	Input current (each input)			± 1	mA
I_O	Output current (each output)			Continuous	mA
	Duration of short-circuit current at (or below) 25°C[3]			Unlimited	
θ_{JA}	Package thermal impedance[4] [5]	D package		97.1	°C/W
		DW package		57.3	
		N package		79.7	
		P package		84.6	
θ_{JC}	Package thermal impedance[4] [5]	FK package		5.6	°C/W
		J package		15.1	
		JG package		14.5	
		U package		14.7	
		W package		10	
T_A	Operating free-air temperature range	C suffix	0	70	°C/W
		I suffix	−40	85	
		M suffix	−55	125	
T_{stg}	Storage temperature		−65	150	°C
	Case temperature for 60 seconds	FK package		260	°C
	Lead temperature 1,6 mm (1/16 inch) from case for 10 seconds:	DW or N package		260	°C
	Lead temperature 1,6 mm (1/16 inch) from case for 60 seconds:	J, JG, U, or W package		300	°C

(1) Stresses beyond those listed under *absolute maximum ratings* can cause permanent damage to the device. These are stress ratings only and functional operation of the device at these or any other conditions beyond those indicated under *recommended operating conditions* is not implied. Exposure to absolute-maximum-rated conditions for extended periods can affect device reliability.
(2) Differential voltages are at the non-inverting input with respect to the inverting input.
(3) The output can be shorted to either supply. Temperatures and/or supply voltages must be limited to confirm that the maximum dissipation rate is not exceeded.
(4) Maximum power dissipation is a function of $T_{J(max)}$, θ_{JA}, and T_A. The maximum allowable power dissipation at any allow able ambient temperature is $P_D = (T_{J(max)} - T_A)/\theta_{JA}$. Operating at the absolute maximum T_J of 150°C can affect reliability.
(5) The package thermal impedance is calculated in accordance with JESD 51-7 (plastic) or MIL-STD-883 Method 1012 (ceramic).

Copyright © 2026 Texas Instruments Incorporated

6.2 Recommended Operating Conditions

over operating free-air temperature range (unless otherwise noted)

			C SUFFIX		I SUFFIX		M SUFFIX		UNIT
			MIN	MAX	MIN	MAX	MIN	MAX	
$V_{CC\pm}$	Supply voltage		± 2.25	± 19	± 2.25	± 19	± 2.25	± 19	V
V_{IC}	Common-mode input voltage	$V_{CC\pm}$ = ± 5 V	−0.9	5	−0.8	5	−0.8	5	V
		$V_{CC\pm}$ = ±15V	−10.9	15	−10.8	15	−10.8	15	
T_A	Operating free-air temperature		0	70	−40	85	−55	125	°C

6.3 TLE2071C Electrical Characteristics

at specified free-air temperature, $V_{CC\pm}$ = ± 5V (unless otherwise noted)

PARAMETER		TEST CONDITIONS		T_A (1)	TLE2071C			TLE2071AC			UNIT
					MIN	TYP	MAX	MIN	TYP	MAX	
V_{IO}	Input offset voltage	V_{IC} = 0, R_S = 50Ω	V_O = 0	25°C		0.34	4		0.3	2	mV
				Full range			6			4	
a_{VIO}	Temperature coefficient of input offset voltage			Full range		3.2	29		3.2	29	µV/°C
I_{IO}	Input offset current	V_{IC} = 0	V_O = 0	25°C		5	100		5	100	pA
				Full range			1.4			1.4	nA
I_{IB}	Input bias current			25°C		15	175		15	175	pA
				Full range			5			5	nA
V_{ICR}	Common-mode input voltage range	R_S = 50Ω		25°C	5 to −1	5 to −1.9		5 to −1	5 to −1.9		V
				Full range	5 to −0.9			5 to −0.9			
V_{OM+}	Maximum positive peak output voltage swing	I_O = − 200µA		25°C	3.8	4.985		3.8	4.985		V
		I_O = − 2mA		25°C	3.5	4.925		3.5	4.925		V
		I_O = − 20mA		25°C	1.5	4.5		1.5	4.5		V
V_{OM-}	Maximum negative peak output voltage swing	I_O = 200µA		25°C	−3.5	-4.985		−3.5	-4.985		V
		I_O = 2mA		25°C	−3.7	-4.925		−3.7	-4.925		V
		I_O = 20mA		25°C	−1.5	-4.5		−1.5	-4.5		V
A_{VD}	Large-signal differential voltage amplification		R_L = 600Ω	25°C	80	91		80	91		dB
			R_L = 2kΩ	25°C	90	100		90	100		
			R_L = 10kΩ	25°C	95	106		95	106		
r_i	Input resistance	V_{IC} = 0	Common mode	25°C		100			100		MΩ
			Differential	25°C		6			6		TΩ
c_i	Input capacitance	V_{IC} = 0	Common mode	25°C		1			1		pF
			Differential	25°C		9			9		
z_o	Open-loop output impedance	Io = 0A		25°C	See Figure 6-15			See Figure 6-15			Ω
CMRR	Common-mode rejection ratio	V_{IC} = V_{ICRmin}, V_O = 0	R_S = 50Ω	25°C		85			85		dB

Copyright © 2026 Texas Instruments Incorporated

6.3 TLE2071C Electrical Characteristics (continued)

at specified free-air temperature, $V_{CC\pm}$ = ± 5V (unless otherwise noted)

PARAMETER		TEST CONDITIONS		T_A (1)	TLE2071C			TLE2071AC			UNIT
					MIN	TYP	MAX	MIN	TYP	MAX	
k_{SVR}	Supply-voltage rejection ratio ($\Delta V_{CC\pm}/\Delta V_{IO}$)	$V_{CC\pm}$ = ± 5V to ± 15V		25°C	82	99		82	99		dB
		V_O = 0	R_S = 50Ω	Full range	80			80			
I_{CC}	Supply current (per channel)	V_O = 0	No load	25°C	1.35	2.48	2.92	1.35	2.48	2.92	mA
I_{OS}	Short-circuit output current			25°C		±65			±65		mA

(1) Full range is 0°C to 70°C.

6.4 TLE2071C Operating Characteristics

at specified free-air temperature, $V_{CC\pm}$ = ± 5V

PARAMETER		TEST CONDITIONS		T_A	TLE2071C			TLE2071AC			UNIT
					MIN	TYP	MAX	MIN	TYP	MAX	
SR	Slew rate	$V_{O(PP)}$ = ± 2.3V, A_{VD} = − 1, C_L = 20pF	R_L = 2kΩ	25°C		32			32		V/µs
t_s	Settling time	A_{VD} = −1, 2V step	To 10mV	25°C		0.25			0.25		µs
			To 1mV			0.4			0.4		
V_n	Equivalent input noise voltage	R_S = 20Ω	f = 10Hz	25°C		48			48		nV/√Hz
			f = 10kHz			4.4			4.4		
$V_{N(PP)}$	Peak-to-peak equivalent input noise voltage		f = 0.1Hz to 10Hz			2.77			2.77		μV_{PP}
I_n	Equivalent input noise current	V_{IC} = 0	f = 1kHz	25°C		60			60		fA/√Hz
THD + N	Total harmonic distortion plus noise	V_O = $3V_{RMS}$, G=1, f = 1kHz, R_L = 10k		25°C		0.0032			0.0032		%
				25°C		90			90		dB
B_1	Unity-gain bandwidth			25°C		10.6			10.6		MHz
B_{OM}	Maximum output-swing bandwidth		A_{VD} = − 1, C_L = 25pF	25°C		300			300		kHz
φ_m	Phase margin at unity gain	V_I = 10mV, C_L = 25pF	R_L = 2kΩ	25°C		56°			56°		

6.5 TLE2071C Electrical Characteristics

at specified free-air temperature, $V_{CC\pm}$ = ± 15V (unless otherwise noted)

PARAMETER		TEST CONDITIONS		T_A (1)	TLE2071C			TLE2071AC			UNIT
					MIN	TYP	MAX	MIN	TYP	MAX	
V_{IO}	Input offset voltage	V_{IC} = 0, R_S = 50Ω	V_O = 0	25°C		0.49	4		0.47	2	mV
				Full range			6			4	
a_{VIO}	Temperature coefficient of input offset voltage			Full range		3.2	29		3.2	29	µV/°C
I_{IO}	Input offset current	V_{IC} = 0	V_O = 0	25°C		6	100		6	100	pA
				Full range			1.4			1.4	nA
I_{IB}	Input bias current			25°C		20	175		20	175	pA
				Full range			5			5	nA

Copyright © 2026 Texas Instruments Incorporated

6.5 TLE2071C Electrical Characteristics (continued)

at specified free-air temperature, $V_{CC\pm}$ = ± 15V (unless otherwise noted)

PARAMETER		TEST CONDITIONS		T_A (1)	TLE2071C			TLE2071AC			UNIT
					MIN	TYP	MAX	MIN	TYP	MAX	
V_{ICR}	Common-mode input	R_S = 50Ω		25°C	15 to −11	15 to −11.9		15 to −11	15 to −11.9		V
				Full range	15 to −10.9			15 to −10.9			
V_{OM+}	Maximum positive peak output voltage swing	I_O = − 200mA		25°C	13.8	14.985		13.8	14.985		V
		I_O = − 2mA		25°C	13.5	14.925		13.5	14.925		
		I_O = − 20mA		25°C	11.5	14.5		11.5	14.5		
V_{OM-}	Maximum negative peak output voltage swing	I_O = 200mA		25°C	−13.8	−14.985		−13.8	−14.985		V
		I_O = 2mA		25°C	−13.5	−14.925		−13.5	−14.925		
		I_O = 20mA		25°C	−11.5	−14.5		−11.5	−14.5		
A_{VD}	Large-signal differential voltage amplification		R_L = 600Ω	25°C	80	96		80	96		dB
			R_L = 2kΩ	25°C	90	109		90	109		
			R_L = 10kΩ	25°C	95	118		95	118		
r_i	Input resistance	V_{IC} = 0	Common mode	25°C		100			100		MΩ
			Differential	25°C		6			6		TΩ
c_i	Input capacitance	V_{IC} = 0	Common mode	25°C		1			1		pF
			Differential	25°C		9			9		
z_o	Open-loop output impedance	I_O = 0A		25°C	See Figure 6-15			See Figure 6-15			Ω
CMRR	Common-mode rejection ratio	V_{IC} = V_{ICRmin}, V_O = 0	R_S = 50Ω	25°C		98			98		dB
k_{SVR}	Supply-voltage rejection ratio ($\Delta V_{CC\pm}/\Delta V_{IO}$)	$V_{CC\pm}$ = ± 5V to ± 15V, V_O = 0, R_S = 50Ω		25°C	82	99		82	99		dB
I_{CC}	Supply current (per channel)	V_O = 0	No load	25°C	1.35	2.48	2.92	1.35	2.48	2.92	mA
I_{OS}	Short-circuit output current			25°C		±65			±65		mA

(1) Full range is 0°C to 70°C.

6.6 TLE2071C Operating Characteristics

at specified free-air temperature, $V_{CC\pm}$ = ± 15V

PARAMETER		TEST CONDITIONS		T_A	TLE2071C			TLE2071AC			UNIT
					MIN	TYP	MAX	MIN	TYP	MAX	
SR	Slew rate	$V_{O(PP)}$ = 10V, R_L = 2kΩ, A_{VD} = − 1, C_L = 20pF		25°C		32			32		V/µs
t_s	Settling time	A_{VD} = − 1, 10V step	To 10mV	25°C		0.4			0.4		µs
			To 1mV			1.5			1.5		

Copyright © 2026 Texas Instruments Incorporated

at specified free-air temperature, $V_{CC\pm}$ = ± 15V

PARAMETER		TEST CONDITIONS		T_A	TLE2071C			TLE2071AC			UNIT
					MIN	TYP	MAX	MIN	TYP	MAX	
V_n	Equivalent input noise voltage	R_S = 20Ω	f = 10Hz	25°C		48			48		nV√Hz
			f = 10kHz			4.4			4.4		
$V_{N(PP)}$	Peak-to-peak equivalent input noise voltage		f = 1.0Hz to 10kHz	25°C		2.77			2.77		µVpp
I_n	Equivalent input noise current		f = 1kHz	25°C		60			60		fA/√Hz
THD+ N	Total harmonic distortion plus noise	V_O = 3V_{RMS}, G = 1, f = 1kHz, R_L = 10k		25°C		0.0032			0.0032		%
						90			90		dB
B_1	Unity-gain bandwidth			25°C		10.6			10.6		MHz
B_{OM}	Maximum output-swing bandwidth		A_{VD} = − 1, C_L = 25pF	25°C		300			300		kHz
φm	Phase margin at unity gain	V_I = 10mV, C_L = 25pF	R_L = 2kΩ	25°C		57°			57°		

6.7 TLE2071I Electrical Characteristics

at specified free-air temperature, $V_{CC\pm}$ = ± 5V (unless otherwise noted)

PARAMETER		TEST CONDITIONS		T_A (1)	TLE2071I			TLE2071AI			UNIT
					MIN	TYP	MAX	MIN	TYP	MAX	
V_{IO}	Input offset voltage	V_{IC} = 0, R_S = 50Ω	V_O = 0	25°C		0.34	4		0.3	2	mV
				Full range			7.6			5.6	
a_{VIO}	Temperature coefficient of input offset voltage			Full range		3.2	29		3.2	29	μV/°C
I_{IO}	Input offset current	V_{IC} = 0	V_O = 0	25°C		5	100		5	100	pA
				Full range			5			5	nA
I_{IB}	Input bias current			25°C		15	175		15	175	pA
				Full range			10			10	nA
V_{ICR}	Common-mode input voltage range	R_S = 50Ω		25°C	5 to −1	5 to −1.9		5 to −1	5 to −1.9		V
				Full range	5 to −0.8			5 to −0.8			
V_{OM+}	Maximum positive peak output voltage swing	I_O = − 200mA		25°C	3.8	4.985		3.8	4.985		V
		I_O = − 2mA		25°C	3.5	4.925		3.5	4.925		
		I_O = − 20mA		25°C	1.5	4.5		1.5	4.5		
V_{OM-}	Maximum negative peak output voltage swing	I_O = 200mA		25°C	−3.8	−4.985		−3.8	−4.985		V
		I_O = 2mA		25°C	−3.5	−4.925		−3.5	−4.925		
		I_O = 20mA		25°C	−1.5	−4.5		−1.5	−4.5		
A_{VD}	Large-signal differential voltage amplification		R_L = 600Ω	25°C	80	91		80	91		dB
			R_L = 2kΩ	25°C	90	100		90	100		
			R_L = 10kΩ	25°C	95	106		95	106		
r_i	Input resistance	V_{IC} = 0	Common mode	25°C		100			100		MΩ
			Differential			6			6		TΩ
c_i	Input capacitance	V_{IC} = 0	Common mode	25°C		1			1		pF
			Differential	25°C		9			9		
z_o	Open-loop output impedance	I_O = 0A		25°C	See Figure 6-15			See Figure 6-15			Ω
CMRR	Common-mode rejection ratio	V_{IC} = V_{ICRmin} V_O = 0	R_S = 50Ω	25°C		85			85		dB
k_{SVR}	Supply-voltage rejection ratio ($\Delta V_{CC\pm}/\Delta V_{IO}$)	$V_{CC\pm}$ = ± 5V to ± 15V, V_O = 0, R_S = 50Ω		25°C	82	99		82	99		dB
I_{CC}	Supply current	V_O = 0	No load	25°C	1.35	2.48	2.92	1.35	2.48	2.92	mA
I_{OS}	Short-circuit output current			25°C		±65			±65		mA

(1) Full range is − 40°C to 85°C.

Copyright © 2026 Texas Instruments Incorporated

6.8 TLE2071I Operating Characteristics

at specified free-air temperature, $V_{CC\pm}$ = ± 5V

PARAMETER		TEST CONDITIONS		T_A	TLE2071I			TLE2071AI			UNIT
					MIN	TYP	MAX	MIN	TYP	MAX	
SR	Slew rate	$V_{O(PP)}$ = ± 2.3V, A_{VD} = − 1, C_L = 20pF	R_L = 2kΩ	25°C		32			32		V/µs
t_s	Settling time	A_{VD} = − 1, 2V step	1mV to 10mV	25°C		0.25			0.25		µs
			1mV to 10mV			0.4			0.4		
V_n	Equivalent input noise voltage	R_S = 20Ω	f = 10Hz	25°C		48			48		nV/√Hz
			f = 10kHz			4.4			4.4		
$V_{N(PP)}$	Peak-to-peak equivalent input noise voltage		f = 0.1Hz to 10Hz	25°C		2.77			2.77		μV_{PP}
I_n	Equivalent input noise current	V_{IC} = 0	f = 1kHz	25°C		60			60		fA/√Hz
THD+ N	Total harmonic distortion plus noise	V_O = $3V_{RMS}$, G = 1, f = 1kHz, R_L = 10k		25°C		0.0032			0.0032		%
						90			90		dB
B_1	Unity-gain bandwidth			25°C		10.6			10.6		MHz
B_{OM}	Maximum output-swing bandwidth		A_{VD} = − 1, C_L = 25pF	25°C		300			300		kHz
φm	Phase margin at unity gain	V_I = 10mV, C_L = 25pF	R_L = 2kΩ	25°C		56°			56°		

6.9 TLE2071I Electrical Characteristics

at specified free-air temperature, $V_{CC\pm}$ = ± 15V (unless otherwise noted)

PARAMETER		TEST CONDITIONS		T_A (1)	TLE2071I			TLE2071AI			UNIT
					MIN	TYP	MAX	MIN	TYP	MAX	
V_{IO}	Input offset voltage	V_{IC} = 0, R_S = 50Ω	V_O = 0	25°C		0.49	4		0.47	2	mV
				Full range			7.6			5.6	
a_{VIO}	Temperature coefficient of input offset voltage			Full range		3.2	29		3.2	29	μV/°C
I_{IO}	Input offset current	V_{IC} = 0	V_O = 0	25°C		6	100		6	100	pA
				Full range			5			5	nA
I_{IB}	Input bias current			25°C		20	175		20	175	pA
				Full range			10			10	nA
V_{ICR}	Common-mode input voltage range	R_S = 50Ω		25°C	15 to −11	15 to −11.9		15 to −11	15 to −11.9		V
				Full range	15 to −10.8			15 to −10.8			
V_{OM+}	Maximum positive peak output voltage swing	I_O = − 200mA		25°C	13.8	14.985		13.8	14.985		V
		I_O = − 2mA		25°C	13.5	14.925		13.5	14.925		
		I_O = − 20mA		25°C	11.5	14.5		11.5	14.5		
V_{OM-}	Maximum negative peak output voltage swing	I_O = 200mA		25°C	−13.8	−14.985		−13.8	−14.985		V
		I_O = 2mA		25°C	−13.5	−14.925		−13.5	−14.925		
		I_O = 20mA		25°C	−11.5	−14.5		−11.5	−14.5		
A_{VD}	Large-signal differential voltage amplification		R_L = 600Ω	25°C	80	96		80	96		dB
			R_L = 2kΩ	25°C	90	109		90	109		
			R_L = 10kΩ	25°C	95	118		95	118		
r_i	Input resistance	V_{IC} = 0	Common mode	25°C		100			100		MΩ
			Differential	25°C		6			6		TΩ
c_i	Input capacitance	V_{IC} = 0	Common mode	25°C		1			1		pF
			Differential	25°C		9			9		
z_o	Open-loop output impedance	I_O = 0A		25°C	See Figure 6-15			See Figure 6-15			Ω
CMRR	Common-mode rejection ratio	V_{IC} = V_{ICRmin}, V_O = 0, R_S = 50Ω		25°C	80	98		80	98		dB
				Full range	79			79			
k_{SVR}	Supply-voltage rejection ratio ($\Delta V_{CC\pm}$ /ΔV_{IO})	$V_{CC\pm}$ = ± 5V to ± 15V		25°C	82	99		82	99		dB
		V_O = 0	R_S = 50Ω	Full range	80			80			
I_{CC}	Supply current	V_O = 0	No load	25°C	1.35	2.48	2.92	1.35	2.48	2.92	mA
I_{OS}	Short-circuit output current			25°C		±65			±65		mA

(1) Full range is − 40°C to 85°C.

Copyright © 2026 Texas Instruments Incorporated

6.10 TLE2071I Operating Characteristics

at specified free-air temperature, $V_{CC\pm}$ = ± 15V

PARAMETER		TEST CONDITIONS		T_A	TLE2071I			TLE2071AI			UNIT
					MIN	TYP	MAX	MIN	TYP	MAX	
SR	Slew rate	$V_{O(PP)}$ = ± 10V, A_{VD} = − 1, C_L = 20pF	R_L = 2kΩ	25°C		32			32		V/µs
t_s	Settling time	A_{VD} = − 1, 2V step	To 10mV	25°C		0.25			0.25		µs
			To 1mV			0.4			0.4		
V_n	Equivalent input noise voltage	R_S = 20Ω	f = 10Hz	25°C		48			48		nV/√Hz
			f = 10kHz			4.4			4.4		
$V_{N(PP)}$	Peak-to-peak equivalent input noise voltage		f = 0.1Hz to 10Hz			2.77			2.77		µV_{PP}
I_n	Equivalent input noise current	V_{IC} = 0	f = 1kHz	25°C		60			60		fA/√Hz
THD + N	Total harmonic distortion plus noise	V_O = 3V_{RMS}, G = 1, f = 1kHz, R_L = 10k		25°C		0.0032			0.0032		%
				25°C		90			90		dB
B_1	Unity-gain bandwidth			25°C		10.6			10.6		MHz
B_{OM}	Maximum output-swing bandwidth		A_{VD} = − 1, C_L = 25pF	25°C		300			300		kHz
φ_m	Phase margin at unity gain	V_I = 10mV, C_L = 25pF	R_L = 2kΩ	25°C		56°			56°		

6.11 TLE2071M Electrical Characteristics

over specified free-air temperature, $V_{CC\pm}$ = ± 5V (unless otherwise noted)

PARAMETER		TEST CONDITIONS		T_A (1)	TLE2071M			TLE2071AM			UNIT
					MIN	TYP	MAX	MIN	TYP	MAX	
V_{IO}	Input offset voltage	V_{IC} = 0, R_S = 50Ω	V_O = 0	25°C		0.34	4		0.3	4	mV
				Full range			9.2			7.2	
a_{VIO}	Temperature coefficient of input offset voltage			Full range		3.2	29(2)		3.2	29(2)	μV/°C
I_{IO}	Input offset current	V_{IC} = 0	V_O = 0	25°C		5	100		5	100	pA
				Full range			20			20	nA
I_{IB}	Input bias current			25°C		15	175		15	175	pA
				Full range			60			60	nA
V_{ICR}	Common-mode input voltage range	R_S = 50Ω		25°C	5 to −1	5 to −1.9		5 to −1	5 to −1.9		V
				Full range	5 to −0.8			5 to −0.8			
V_{OM+}	Maximum positive peak output voltage swing	I_O = –200mA		25°C	3.8	4.1		3.8	4.1		V
				Full range	3.6			3.6			
		I_O = –2mA		25°C	3.5	3.9		3.5	3.9		
				Full range	3.3			3.3			
		I_O = –20mA		25°C	1.5	2.3		1.5	2.3		
				Full range	1.4			1.4			
V_{OM-}	Maximum negative peak output voltage swing	I_O = 200mA		25°C	−3.8	−4.2		−3.8	−4.2		V
				Full range	−3.6			−3.6			
		I_O = 2mA		25°C	−3.5	−4.1		−3.5	−4.1		
				Full range	−3.3			−3.3			
		I_O = 20mA		25°C	−1.5	−2.4		−1.5	−2.4		
				Full range	−1.4			−1.4			
A_{VD}	Large-signal differential voltage amplification	V_O = ± 2.3V	R_L = 600Ω	25°C	80	91		80	91		dB
				Full range	78			78			
			R_L = 2kΩ	25°C	90	100		90	100		
				Full range	88			88			
			R_L = 10kΩ	25°C	95	106		95	106		
				Full range	93			93			
r_i	Input resistance	V_{IC} = 0		25°C		10^{12}			10^{12}		Ω
c_i	Input capacitance	V_{IC} = 0	Common mode	25°C		11			11		pF
			Differential	25°C		2.5			2.5		
z_o	Open-loop output impedance	f = 1MHz		25°C		80			80		Ω
CMRR	Common-mode rejection ratio	V_{IC} = V_{ICRmin}, V_O = 0	R_S = 50Ω	25°C	70	89		70	89		dB
				Full range	68			68			
k_{SVR}	Supply-voltage rejection ratio ($\Delta V_{CC\pm}$ /ΔV_{IO})	$V_{CC\pm}$ = ± 5V to ± 15V		25°C	82	99		82	99		dB
		V_O = 0	R_S = 50Ω	Full range	80			80			

Copyright © 2026 Texas Instruments Incorporated

6.11 TLE2071M Electrical Characteristics (continued)

over specified free-air temperature, $V_{CC\pm}$ = ± 5V (unless otherwise noted)

PARAMETER		TEST CONDITIONS		T_A (1)	TLE2071M			TLE2071AM			UNIT
					MIN	TYP	MAX	MIN	TYP	MAX	
I_{CC}	Supply current	V_O = 0	No load	25°C	1.35	1.6	2.2	1.35	1.6	2.2	mA
				Full range			2.2			2.2	
I_{OS}	Short-circuit output current	V_O = 0	V_{ID} =1V	25°C		−35			−35		mA
			V_{ID} = − 1V			45			45		

(1) Full range is − 55°C to 125°C.
(2) On products compliant to MIL-PRF-38535, Class B, this parameter is not production tested.

6.12 TLE2071M Operating Characteristics

at specified free-air temperature, $V_{CC\pm}$ = ± 5V

PARAMETER		TEST CONDITIONS		T_A (1)	TLE2071M			TLE2071AM			UNIT
					MIN	TYP	MAX	MIN	TYP	MAX	
SR+	Positive slew rate	$V_{O(PP)}$ = ± 2.3V A_{VD} = − 1 C_L = 100pF	R_L = 2kΩ	25°C		35			35		V/µs
				Full range	20 (2)			20(2)			
SR−	Negative slew rate			25°C		38			38		V/µs
				Full range	20(2)			20(2)			
t_s	Settling time	A_{VD} = − 1, 2V step, R_L = 1kΩ, C_L = 100pF	To 10mV	25°C		0.25			0.25		µs
			To 1mV			0.4			0.4		
V_n	Equivalent input noise voltage	R_S = 20Ω	f = 10Hz	25°C		48	85 (2)		48	85 (2)	nV/√Hz
			f = 10kHz			12	17 (2)		12	17 (2)	
$V_{N(PP)}$	Peak-to-peak equivalent input noise voltage		f = 10Hz to 10kHz	25°C		6			6		µV
			f = 0.1Hz to 10Hz			0.6			0.6		
I_n	Equivalent input noise current	V_{IC} = 0	f = 10kHz	25°C		2.8			2.8		fA/√Hz
THD + N	Total harmonic distortion plus noise	$V_{O(PP)}$ = 5V, f = 1kHz, R_S = 25Ω	A_{VD} = 10, R_L = 2kΩ	25°C		0.013%			0.013%		
B_1	Unity-gain bandwidth	V_I = 10mV, C_L = 25pF	R_L = 2kΩ	25°C		9.4			9.4		MHz
B_{OM}	Maximum output-swing bandwidth	$V_{O(PP)}$ = 4V R_L = 2kΩ	A_{VD} = − 1, C_L = 25pF	25°C		2.8			2.8		MHz
φ_m	Phase margin at unity gain	V_I = 10mV, C_L = 25pF	R_L = 2kΩ	25°C		56°			56°		

(1) Full range is − 55°C to 125°C.
(2) On products compliant to MIL-PRF-38535, Class B, this parameter is not production tested.

6.13 TLE2071M Electrical Characteristics

at specified free-air temperature, $V_{CC\pm}$ = ± 15V (unless otherwise noted)

PARAMETER		TEST CONDITIONS		T_A [2]	TLE2071M			TLE2071AM			UNIT
					MIN	TYP	MAX	MIN	TYP	MAX	
V_{IO}	Input offset voltage	V_{IC} = 0, R_S = 50Ω	V_O = 0	25°C		0.49	4		0.47	2	mV
				Full range			9.2			7.2	
a_{VIO}	Temperature coefficient of input offset voltage			Full range		3.2	29[1]		3.2	29[1]	µV/°C
I_{IO}	Input offset current	V_{IC} = 0	V_O = 0	25°C		6	100		6	100	pA
				Full range			20			20	nA
I_{IB}	Input bias current			25°C		20	175		20	175	pA
				Full range			60			60	nA
V_{ICR}	Common-mode input voltage range	R_S = 50Ω		25°C	15 to −11	15 to −11.9		15 to −11	15 to −11.9		V
				Full range	15 to −10.9			15 to −10.9			
V_{OM+}	Maximum positive peak output voltage swing	I_O = − 200mA		25°C	13.8	14.1		13.8	14.1		V
				Full range	13.6			13.6			
		I_O = − 2mA		25°C	13.5	13.9		13.5	13.9		
				Full range	13.3			13.3			
		I_O = − 20mA		25°C	11.5	12.3		11.5	12.3		
				Full range	11.4			11.4			
V_{OM-}	Maximum negative peak output voltage swing	I_O = 200mA		25°C	−13.8	−14.2		−13.8	−14.2		V
				Full range	−13.6			−13.6			
		I_O = 2mA		25°C	−13.5	−14		−13.5	−14		
				Full range	−13.3			−13.3			
		I_O = 20mA		25°C	−11.5	−12.4		−11.5	−12.4		
				Full range	−11.4			−11.4			
A_{VD}	Large-signal differential voltage amplification	V_O = ± 10V	R_L = 600Ω	25°C	80	96		80	96		dB
				Full range	78			78			
			R_L = 2kΩ	25°C	90	109		90	109		
				Full range	88			88			
			R_L = 10kΩ	25°C	95	118		95	118		
				Full range	93			93			
r_i	Input resistance	V_{IC} = 0		25°C		10^{12}			10^{12}		Ω
c_i	Input capacitance	V_{IC} = 0	Common mode	25°C		7.5			7.5		pF
			Differential	25°C		2.5			2.5		
z_o	Open-loop output impedance	f = 1MHz		25°C		80			80		Ω
CMRR	Common-mode rejection ratio	V_{IC} = V_{ICRmin}, V_O = 0	R_S = 50Ω	25°C	80	98		80	98		dB
				Full range	78			78			
k_{SVR}	Supply-voltage rejection ratio ($\Delta V_{CC\pm}$ /ΔV_{IO})	$V_{CC\pm}$ = ± 5V to ± 15V		25°C	82	99		82	99		dB
		V_O = 0	R_S = 50Ω	Full range	80			80			

Copyright © 2026 Texas Instruments Incorporated

6.13 TLE2071M Electrical Characteristics (continued)

at specified free-air temperature, $V_{CC\pm}$ = ± 15V (unless otherwise noted)

PARAMETER		TEST CONDITIONS		T_A (2)	TLE2071M			TLE2071AM			UNIT
					MIN	TYP	MAX	MIN	TYP	MAX	
I_{CC}	Supply current	V_O = 0	No load	25°C	1.35	1.7	2.2	1.35	1.7	2.2	mA
				Full range			2.2			2.2	
I_{OS}	Short-circuit output current	V_O = 0	V_{ID} = 1V	25°C	−30	−45		−30	−45		mA
			V_{ID} = − 1V		30	48		30	48		

(1) On products compliant to MIL-PRF-38535, Class B, this parameter is not production tested.
(2) Full range is − 55°C to 125°C.

6.14 TLE2071M Operating Characteristics

at specified free-air temperature, $V_{CC\pm}$ = ± 15V

PARAMETER		TEST CONDITIONS		T_A (2)	TLE2071M			TLE2071AM			UNIT
					MIN	TYP	MAX	MIN	TYP	MAX	
SR+	Positive slew rate	$V_{O(PP)}$ = 10V, R_L = 2kΩ	A_{VD} = − 1, C_L = 100pF	25°C	30	40		30	40		V/µs
				Full range	22			22			
SR−	Negative slew rate			25°C	30	45		30	45		V/µs
				Full range	22			22			
t_s	Settling time	A_{VD} = − 1, 10V step, R_L = 1kΩ, C_L = 100pF	To 10mV	25°C		0.4			0.4		µs
			To 1mV			1.5			1.5		
V_n	Equivalent input noise voltage	R_S = 20Ω	f = 10Hz	25°C		48	85(1)		48	85(1)	nV/√Hz
			f = 10kHz			12	17(1)		12	17(1)	
$V_{N(PP)}$	Peak-to-peak equivalent input noise voltage		f = 10Hz to 10kHz	25°C		6			6		µV
			f = 0.1Hz to 10Hz			0.6			0.6		
I_n	Equivalent input noise current	V_{IC} = 0	f = 10kHz	25°C		2.8			2.8		fA/√Hz
THD + N	Total harmonic distortion plus noise	$V_{O(PP)}$ = 20V, f = 1kHz, R_S = 25Ω	A_{VD} = 10, R_L = 2kΩ	25°C		0.008%			0.008%		
B_1	Unity-gain bandwidth	V_I = 10mV, C_L = 25pF	R_L = 2kΩ	25°C	8(1)	10		8(1)	10		MHz
B_{OM}	Maximum output-swing bandwidth	$V_{O(PP)}$ = 20V, R_L = 2kΩ	A_{VD} = − 1, C_L = 25pF	25°C	478(1)	637		478(1)	637		kHz
φ_m	Phase margin at unity gain	V_I = 10mV, C_L = 25pF	R_L = 2kΩ	25°C		57°			57°		

(1) On products compliant to MIL-PRF-38535, Class B, this parameter is not production tested.
(2) Full range is − 55°C to 125°C.

Copyright © 2026 Texas Instruments Incorporated

6.15 TLE2072C Electrical Characteristics

at specified free-air temperature, $V_{CC\pm}$ = ± 5V (unless otherwise noted)

PARAMETER		TEST CONDITIONS		T_A (1)	TLE2072C			TLE2072AC			UNIT
					MIN	TYP	MAX	MIN	TYP	MAX	
V_{IO}	Input offset voltage	V_{IC} = 0, R_S = 50Ω	V_O = 0	25°C		0.9	6		0.65	3.5	mV
				Full range			7.8			5.3	
a_{VIO}	Temperature coefficient of input offset voltage			Full range		2.3	25		2.3	25	µV/°C
I_{IO}	Input offset current	V_{IC} = 0	V_O = 0	25°C		5	100		5	100	pA
				Full range			1.4			1.4	nA
I_{IB}	Input bias current			25°C		15	175		15	175	pA
				Full range			5			5	nA
V_{ICR}	Common-mode input voltage range	R_S = 50Ω		25°C	5 to −1	5 to −1.9		5 to −1	5 to −1.9		V
				Full range	5 to −0.9			5 to −0.9			
V_{OM+}	Maximum positive peak output voltage swing	I_I = − 200mA		25°C	3.8	4.985		3.8	4.985		V
		I_O = − 2mA		25°C	3.5	4.925		3.5	4.925		
		I_O = − 20mA		25°C	1.5	4.5		1.5	4.5		
V_{OM-}	Maximum negative peak output voltage swing	I_O= 200mA		25°C	−3.8	-4.985		−3.8	-4.985		V
		I_O = 2mA		25°C	−3.5	-4.925		−3.5	-4.925		
		I_O = 20mA		25°C	−1.5	-4.5		−1.5	-4.5		
A_{VD}	Large-signal differential voltage amplification		R_L = 600Ω	25°C	80	91		80	91		dB
			R_L = 2kΩ	25°C	90	100		90	100		
			R_L = 10kΩ	25°C	95	106		95	106		
r_i	Input resistance	V_{IC} = 0	Common mode	25°C		100			100		MΩ
			Differential	25°C		6			6		TΩ
c_i	Input capacitance	V_{IC} = 0	Common mode	25°C		1			1		pF
			Differential	25°C		9			9		
z_o	Open-loop output impedance	I_O = 0A		25°C	See Figure 6-15			See Figure 6-15			Ω
CMRR	Common-mode rejection ratio	V_{IC} = V_{ICRmin}, V_O = 0	R_S = 50Ω	25°C		89			89		dB
k_{SVR}	Supply-voltage rejection ratio ($\Delta V_{CC\pm}$ /ΔV_{IO})	$V_{CC\pm}$ = ± 5V to ± 15V		25°C	82	99		82	99		dB
		V_O = 0	R_S = 50Ω	Full range	80			80			
I_{CC}	Supply current (per channel)	V_O = 0	No load	25°C	1.35	2.4	2.8	1.35	2.4	2.8	mA
a_x	Crosstalk attenuation	V_{IC} = 0	R_L = 2kΩ	25°C		120			120		dB
I_{OS}	Short-circuit output current			25°C		±65			±65		mA

(1) Full range is 0°C to 70°C.

Copyright © 2026 Texas Instruments Incorporated

6.16 TLE2072C Operating Characteristics

at specified free-air temperature, $V_{CC\pm}$ = 5V

PARAMETER		TEST CONDITIONS		T_A	TLE2072C			TLE2072AC			UNIT
					MIN	TYP	MAX	MIN	TYP	MAX	
SR	Slew rate	$V_{O(PP)}$ = ± 2.3V, A_{VD} = − 1, C_L = 20pF	R_L = 2kΩ	25°C		32			32		V/µs
t_s	Settling time	A_{VD} = − 1, 2V step	To 10mV	25°C		0.25			0.25		µs
			To 1mV			0.4			0.4		
V_n	Equivalent input noise voltage	R_S = 20Ω	f = 10Hz	25°C		48			48		nV/√Hz
			f = 10kHz			4.4			4.4		
$V_{N(PP)}$	Peak-to-peak equivalent input noise voltage		f = 0.1Hz to 10Hz			2.77			2.77		μV_{PP}
I_n	Equivalent input noise current	V_{IC} = 0	f = 1kHz	25°C		60			60		fA/√Hz
THD + N	Total harmonic distortion plus noise	V_O = 3V_{RMS}, G = 1, f = 1kHz, R_L = 10k		25°C		0.0032			0.0032		%
				25°C		90			90		dB
B_1	Unity-gain bandwidth			25°C		10.6			10.6		MHz
B_{OM}	Maximum output-swing bandwidth		A_{VD} = − 1, C_L = 25pF	25°C		300			300		kHz
φ_m	Phase margin at unity gain	V_I = 10mV, C_L = 25pF	R_L = 2kΩ	25°C		56°			56°		

6.17 TLE2072C Electrical Characteristics

at specified free-air temperature, $V_{CC\pm}$ = ± 15V (unless otherwise noted)

PARAMETER		TEST CONDITIONS		T_A (1)	TLE2072C			TLE2072AC			UNIT
					MIN	TYP	MAX	MIN	TYP	MAX	
V_{IO}	Input offset voltage	V_{IC} = 0, R_S= 50Ω	V_O = 0	25°C		1.1	6		0.7	3.5	mV
				Full range			7.8			5.3	
a_{VIO}	Temperature coefficient of input offset voltage			Full range		2.4	25		2.4	25	μV/°C
I_{IO}	Input offset current	V_{IC} = 0	V_O = 0	25°C		6	100		6	100	pA
				Full range			1.4			1.4	nA
I_{IB}	Input bias current			25°C		20	175		20	175	pA
				Full range			5			5	nA
V_{ICR}	Common-mode input voltage range	R_S = 50Ω		25°C	15 to −11	15 to −11.9		15 to −11	15 to −11.9		V
				Full range	15 to −10.9			15 to −10.9			
V_{OM+}	Maximum positive peak output voltage swing	I_O = − 200mA		25°C	13.8	14.985		13.8	14.985		V
		I_O = − 2mA		25°C	13.5	14.925		13.5	14.925		
		I_O = − 20mA		25°C	11.5	14.5		11.5	14.5		
V_{OM-}	Maximum negative peak output voltage swing	I_O = 200mA		25°C	−13.8	−14.985		−13.8	−14.985		V
		I_O = 2mA		25°C	−13.5	−14.925		−13.5	−14.925		
		I_O = 20mA		25°C	−11.5	−14.5		−11.5	−14.5		
A_{VD}	Large-signal differential voltage amplification		R_L = 600Ω	25°C	80	96		80	96		dB
			R_L = 2kΩ	25°C	90	109		90	109		
			R_L = 10kΩ	25°C	95	118		95	118		
r_i	Input resistance	V_{IC} = 0	Common mode	25°C		100			100		MΩ
			Differential	25°C		6			6		TΩ
c_i	Input capacitance	V_{IC} = 0	Common mode	25°C		1			1		pF
			Differential	25°C		9			9		
z_o	Open-loop output impedance	I_O = 0A		25°C	See Figure 6-15			See Figure 6-15			Ω
CMRR	Common-mode rejection ratio	V_{IC} = V_{ICRmin}, V_O = 0	R_S = 50Ω	25°C		98			98		dB
k_{SVR}	Supply-voltage rejection ratio ($\Delta V_{CC\pm}/\Delta V_{IO}$)	$V_{CC\pm}$ = ± 5V to ± 15V, V_O = 0,R_S = 50Ω		25°C	82	99		82	99		dB
I_{CC}	Supply current (per channel)	V_O = 0	No load	25°C	1.35	2.4	2.8	1.35	2.4	2.8	mA
a_x	Crosstalk attenuation	V_{IC} = 0	R_L = 2kΩ	25°C		120			120		dB
I_{OS}	Short-circuit output current			25°C		±65			±65		mA

Copyright © 2026 Texas Instruments Incorporated

6.18 TLE2072C Operating Characteristics 15V

at specified free-air temperature, $V_{CC\pm}$ = ± 15V

PARAMETER		TEST CONDITIONS		T_A	TLE2072C			TLE2072AC			UNIT
					MIN	TYP	MAX	MIN	TYP	MAX	
SR	Slew rate	$V_{O(PP)}$ = 10V, R_L = 2kΩ, A_{VD} = − 1, C_L = 20pF		25°C		32			32		V/µs
t_s	Settling time	A_{VD} = − 1, 10V step	To 10mV	25°C		0.4			0.4		µs
			To 1mV			1.5			1.5		
V_n	Equivalent input noise voltage	R_S = 20Ω	f = 10Hz	25°C		48			48		nV√Hz
			f = 10kHz			4.4			4.4		
$V_{N(PP)}$	Peak-to-peak equivalent input noise voltage		f = 1.0Hz to 10kHz	25°C		2.77			2.77		µVpp
I_n	Equivalent input noise current	V_{IC} = 0	f = 1kHz	25°C		60			60		fA/√Hz
THD+ N	Total harmonic distortion plus noise	V_O = 3V_{RMS}, G = 1, f = 1kHz, R_L = 10k		25°C		0.0032			0.0032		%
						90			90		dB
B_1	Unity-gain bandwidth			25°C		10.6			10.6		MHz
B_{OM}	Maximum output-swing bandwidth		A_{VD} = − 1, C_L = 25pF	25°C		300			300		kHz
φm	Phase margin at unity gain	V_I = 10mV, C_L = 25pF	R_L = 2kΩ	25°C		57°			57°		

6.19 TLE2072I Electrical Characteristics

at specified free-air temperature, $V_{CC\pm}$ = ± 5V (unless otherwise noted)

PARAMETER		TEST CONDITIONS		T_A (1)	TLE2072I			TLE2072AI			UNIT
					MIN	TYP	MAX	MIN	TYP	MAX	
V_{IO}	Input offset voltage	V_{IC} = 0, R_S = 50Ω	V_O = 0	25°C		0.9	6		0.65	3.5	mV
				Full range			9.1			6.4	
a_{VIO}	Temperature coefficient of input offset voltage			Full range		2.4	25		2.4	25	μV/°C
I_{IO}	Input offset current	V_{IC} = 0	V_O = 0	25°C		5	100		5	100	pA
				Full range			5			5	nA
I_{IB}	Input bias current			25°C		15	175		15	175	pA
				Full range			10			10	nA
V_{ICR}	Common-mode input voltage range	R_S = 50Ω		25°C	5 to −1	5 to −1.9		5 to −1	5 to −1.9		V
				Full range	5 to −0.8			5 to −0.8			
V_{OM+}	Maximum positive peak output voltage swing	I_O = − 200μA		25°C	3.8	4.985		3.8	4.985		V
		I_O = − 2mA		25°C	3.5	4.925		3.5	4.925		V
		I_O = − 20mA		25°C	1.5	4.5		1.5	4.5		V
V_{OM-}	Maximum negative peak output voltage swing	I_O = 200μA		25°C	−3.5	-4.985		−3.5	-4.985		V
		I_O = 2mA		25°C	−3.7	-4.925		−3.7	-4.925		V
		I_O = 20mA		25°C	−1.5	-4.5		−1.5	-4.5		V
A_{VD}	Large-signal differential voltage amplification		R_L = 600Ω	25°C	80	91		80	91		dB
			R_L = 2kΩ	25°C	90	100		90	100		
			R_L = 10kΩ	25°C	95	106		95	106		
r_i	Input resistance	V_{IC} = 0	Common mode	25°C		100			100		MΩ
			Differential	25°C		6			6		TΩ
c_i	Input capacitance	V_{IC} = 0	Common mode	25°C		1			1		pF
			Differential	25°C		9			9		
z_o	Open-loop output impedance	I_O = 0A		25°C	See Figure 6-15			See Figure 6-15			Ω
CMRR	Common-mode rejection ratio	V_{IC} = V_{ICRmin}, V_O = 0	R_S = 50Ω	25°C		85			85		dB
k_{SVR}	Supply-voltage rejection ratio ($\Delta V_{CC\pm}$ /ΔV_{IO})	$V_{CC\pm}$ = ± 5V to ± 15V		25°C	82	99		82	99		dB
		V_O = 0	R_S = 50Ω	Full range	80			80			
I_{CC}	Supply current (per channel)	V_O = 0	No load	25°C	1.35	2.4	2.8	1.35	2.4	2.8	mA
a_x	Crosstalk attenuation	V_{IC} = 0	R_L = 2kΩ	25°C	120			120			dB
I_{OS}	Short-circuit output current			25°C		±65			±65		mA

(1) Full range is − 40°C to 85°C.

Copyright © 2026 Texas Instruments Incorporated

6.20 TLE2072I Operating Characteristics

at specified free-air temperature, $V_{CC\pm}$= ± 5V

PARAMETER		TEST CONDITIONS		T_A	TLE2072I			TLE2072AI			UNIT
					MIN	TYP	MAX	MIN	TYP	MAX	
SR	Slew rate	$V_{O(PP)}$ = ± 2.3V, A_{VD} = − 1, C_L = 20pF	R_L = 2kΩ	25°C		32			32		V/µs
t_s	Settling time	A_{VD} = − 1, 2V step	To 10mV	25°C		0.25			0.25		µs
			To 1mV			0.4			0.4		
V_n	Equivalent input noise voltage	R_S = 20Ω	f = 10Hz	25°C		48			48		nV/√Hz
			f = 10kHz			4.4			4.4		
$V_{N(PP)}$	Peak-to-peak equivalent input noise voltage		f = 0.1Hz to 10Hz			2.77			2.77		μV_{PP}
I_n	Equivalent input noise current	V_{IC} = 0	f = 1kHz	25°C		60			60		fA/√Hz
THD + N	Total harmonic distortion plus noise	V_O = $3V_{RMS}$,G = 1, f = 1kHz, R_L = 10k		25°C		0.0032			0.0032		%
				25°C		90			90		dB
B_1	Unity-gain bandwidth			25°C		10.6			10.6		MHz
B_{OM}	Maximum output-swing bandwidth		A_{VD} = − 1, C_L = 25pF	25°C		300			300		kHz
φ_m	Phase margin at unity gain	V_I = 10mV, C_L = 25pF	R_L = 2kΩ	25°C		56°			56°		

6.21 TLE2072I Electrical Characteristics

at specified free-air temperature, $V_{CC}\pm$ = ± 15V (unless otherwise noted)

PARAMETER		TEST CONDITIONS		T_A (1)	TLE2072I			TLE2072AI			UNIT
					MIN	TYP	MAX	MIN	TYP	MAX	
V_{IO}	Input offset voltage	V_{IC} = 0, R_S = 50Ω	V_O = 0	25°C		1.1	6		0.7	3.5	mV
				Full range			9.1			6.4	
a_{VIO}	Temperature coefficient of input offset voltage			Full range		2.4	25		2.4	25	μV/°C
I_{IO}	Input offset current	V_{IC} = 0	V_O = 0	25°C		6	100		6	100	pA
				Full range			5			5	nA
I_{IB}	Input bias current			25°C		20	175		20	175	pA
				Full range			10			10	nA
V_{ICR}	Common-mode input voltage range	R_S = 50Ω		25°C	15 to −11	15 to −11.9		15 to −11	15 to −11.9		V
				Full range	15 to −10.8			15 to −10.8			
V_{OM+}	Maximum positive peak output voltage swing	I_O = − 200mA		25°C	13.8	14.985		13.8	14.985		V
		I_O = − 2mA		25°C	13.5	14.925		13.5	14.925		
		I_O = − 20mA		25°C	11.5	14.5		11.5	14.5		
V_{OM-}	Maximum negative peak output voltage swing	I_O = 200mA		25°C	−13.8	−14.985		−13.8	−14.985		V
		I_O = 2mA		25°C	−13.5	−14.925		−13.5	−14.925		
		I_O = 20mA		25°C	−11.5	−14.5		−11.5	−14.5		
A_{VD}	Large-signal differential voltage amplification		R_L = 600Ω	25°C	80	96		80	96		dB
			R_L = 2kΩ	25°C	90	109		90	109		
			R_L = 10kΩ	25°C	95	118		95	118		
r_i	Input resistance	V_{IC} = 0	Common mode	25°C		100			100		MΩ
			Differential	25°C		6			6		TΩ
c_i	Input capacitance	V_{IC} = 0	Common mode	25°C		7.5			7.5		pF
			Differential	25°C		2.5			2.5		
z_o	Open-loop output impedance	I_O = 0A		25°C	See Figure 6-15			See Figure 6-15			Ω
CMRR	Common-mode rejection ratio	V_{IC} = V_{ICRmin}, V_O = 0	R_S = 50Ω	25°C		98			98		dB
k_{SVR}	Supply-voltage rejection ratio ($\Delta V_{CC\pm}/\Delta V_{IO}$)	$V_{CC\pm}$ = ± 5V to ± 15V, V_O = 0, R_S = 50Ω		25°C	82	99		82	99		dB
I_{cc}	Supply current (per channel)	V_O = 0	No load	25°C	1.35	2.4	2.8	1.35	2.4	2.8	mA
a_x	Crosstalk attenuation	V_{IC} = 0	R_L = 2kΩ	25°C		120			120		dB
I_{OS}	Short-circuit output current			25°C		±65			±65		mA

(1) Full range is − 40°C to 85°C.

Copyright © 2026 Texas Instruments Incorporated

6.22 TLE2072I Operating Characteristics

at specified free-air temperature, $V_{CC\pm}$ = ± 15V

PARAMETER		TEST CONDITIONS		T_A	TLE2072I			TLE2072AI			UNIT
					MIN	TYP	MAX	MIN	TYP	MAX	
SR	Slew rate	$V_{O(PP)}$ = 10V, R_L = 2kΩ, A_{VD} = − 1, C_L = 20pF		25°C		32			32		V/µs
t_s	Settling time	A_{VD} = − 1, 10V step	To 10mV	25°C		0.4			0.4		µs
			To 1mV			1.5			1.5		
V_n	Equivalent input noise voltage	R_S = 20Ω	f = 10Hz	25°C		48			48		nV√Hz
			f = 10kHz			4.4			4.4		
$V_{N(PP)}$	Peak-to-peak equivalent input noise voltage		f = 1.0Hz to 10kHz	25°C		2.77			2.77		µVpp
I_n	Equivalent input noise current	V_{IC} = 0	f = 1kHz	25°C		60			60		fA/√Hz
THD+ N	Total harmonic distortion plus noise	V_O = 3V_{RMS}, G = 1, f = 1kHz, R_L= 10k		25°C		0.0032			0.0032		%
						90			90		dB
B_1	Unity-gain bandwidth			25°C		10.6			10.6		MHz
B_{OM}	Maximum output-swing bandwidth		A_{VD} = − 1, C_L = 25pF	25°C		300			300		kHz
φm	Phase margin at unity gain	V_I = 10mV, C_L = 25pF	R_L = 2kΩ	25°C		57°			57°		

6.23 TLE2072M Electrical Characteristics

at specified free-air temperature, $V_{CC\pm}$ = ± 5V

PARAMETER		TEST CONDITIONS		T_A (2)	TLE2072M			TLE2072AM			UNIT
					MIN	TYP	MAX	MIN	TYP	MAX	
V_{IO}	Input offset voltage	V_{IC} = 0, R_S = 50Ω	V_O = 0	25°C		0.9	6		0.65	3.5	mV
				Full range			10.5			8	
a_{VIO}	Temperature coefficient of input offset voltage			Full range		2.3	25(1)		2.3	25(1)	μV/°C
I_{IO}	Input offset current	V_{IC} = 0	V_O = 0	25°C		5	100		5	100	pA
				Full range			20			20	nA
I_{IB}	Input bias current			25°C		15	175		15	175	pA
				Full range			60			60	nA
V_{ICR}	Common-mode input voltage range	R_S = 50Ω		25°C	5 to −1	5 to −1.9		5 to −1	5 to −1.9		V
				Full range	5 to −0.8			5 to −0.8			
V_{OM+}	Maximum positive peak output voltage swing	I_O = − 200mA		25°C	3.8	4.1		3.8	4.1		V
				Full range	3.6			3.6			
		I_O = − 2mA		25°C	3.5	3.9		3.5	3.9		
				Full range	3.3			3.3			
		I_O = − 20mA		25°C	1.5	2.3		1.5	2.3		
				Full range	1.4			1.4			
V_{OM-}	Maximum negative peak output voltage swing	I_O = 200mA		25°C	−3.8	−4.2		−3.8	−4.2		V
				Full range	−3.6			−3.6			
		I_O = 2mA		25°C	−3.5	−4.1		−3.5	−4.1		
				Full range	−3.3			−3.3			
		I_O = 20mA		25°C	−1.5	−2.4		−1.5	−2.4		
				Full range	−1.4			−1.4			
A_{VD}	Large-signal differential voltage amplification	V_O = ± 2.3V	R_L = 600Ω	25°C	80	91		80	91		dB
				Full range	78			78			
			R_L = 2kΩ	25°C	90	100		90	100		
				Full range	88			88			
			R_L = 10kΩ	25°C	95	106		95	106		
				Full range	93			93			
r_i	Input resistance	V_{IC} = 0		25°C		10^{12}			10^{12}		Ω
c_i	Input capacitance	V_{IC} = 0	Common mode	25°C		11			11		pF
			Differential	25°C		2.5			2.5		
z_o	Open-loop output impedance	f = 1MHz		25°C		80			80		Ω
CMRR	Common-mode rejection ratio	V_{IC} = V_{ICRmin}, V_O = 0	R_S = 50Ω	25°C	70	89		70	89		dB
				Full range	68			68			
k_{SVR}	Supply-voltage rejection ratio ($\Delta V_{CC\pm}/\Delta V_{IO}$)	$V_{CC\pm}$ = ± 5V to ± 15V		Full range	80			80			dB
		V_O = 0	R_S = 50Ω								

Copyright © 2026 Texas Instruments Incorporated

6.23 TLE2072M Electrical Characteristics (continued)

at specified free-air temperature, $V_{CC\pm}$ = ± 5V

PARAMETER		TEST CONDITIONS		T_A (2)	TLE2072M			TLE2072AM			UNIT
					MIN	TYP	MAX	MIN	TYP	MAX	
I_{CC}	Supply current (both channels)	V_O = 0	No load	25°C	2.7	2.9	3.6	2.7	2.9	3.6	mA
				Full range			3.6			3.6	
a_x	Crosstalk attenuation	V_{IC} = 0	R_L = 2kΩ	25°C		120			120		dB
I_{OS}	Short-circuit output current	V_O = 0	V_{ID} = 1V	25°C		−35			−35		mA
			V_{ID} = − 1V			45			45		

(1) On products compliant to MIL-PRF-38535, Class B, this parameter is not production tested.
(2) Full range is − 55°C to 125°C.

6.24 TLE2072M Operating Characteristics 5V

at specified free-air temperature, $V_{CC\pm}$ = ± 5V

PARAMETER		TEST CONDITIONS		T_A (2)	TLE2072M			TLE2072AM			UNIT
					MIN	TYP	MAX	MIN	TYP	MAX	
SR+	Positive slew rate	$V_{O(PP)}$ = ± 2.3V, A_{VD} = −1, C_L = 100pF	R_L = 2kΩ	25°C		35			35		V/µs
				Full range	18(1)			18(1)			
SR−	Negative slew rate			25°C		38			38		V/µs
				Full range	18(1)			18(1)			
t_s	Settling time	A_{VD} = −1, 2V step, R_L = 1kΩ, C_L = 100pF	To 10mV	25°C		0.25			0.25		µs
			To 1mV			0.4			0.4		
V_n	Equivalent input noise voltage	R_S = 20Ω	f = 10Hz	25°C		48	85(1)		48	85(1)	nV/√Hz
			f = 10kHz			12	17(1)		12	17(1)	
$V_{N(PP)}$	Peak-to-peak equivalent input noise voltage		f = 10Hz to 10kHz	25°C		6			6		µV
			f = 0.1Hz to 10Hz			0.6			0.6		
I_n	Equivalent input noise current	V_{IC} = 0	f = 10kHz	25°C		2.8			2.8		fA /√Hz
THD + N	Total harmonic distortion plus noise	$V_{O(PP)}$ = 5V, f = 1kHz, R_S = 25Ω	A_{VD} = 10, R_L = 2kΩ	25°C		0.013%			0.013%		
B_1	Unity-gain bandwidth	V_I = 10mV, C_L = 25pF	R_L = 2kΩ	25°C		9.4			9.4		MHz
B_{OM}	Maximum output-swing bandwidth	$V_{O(PP)}$ = 4V, R_L = 2kΩ	A_{VD} = − 1, C_L = 25pF	25°C		2.8			2.8		MHz
φ_m	Phase margin at unity gain	V_I = 10mV, C_L = 25pF	R_L = 2kΩ	25°C		56°			56°		

(1) On products compliant to MIL-PRF-38535, Class B, this parameter is not production tested.
(2) Full range is − 55°C to 125°C.

Copyright © 2026 Texas Instruments Incorporated

6.25 TLE2072M Electrical Characteristics

at specified free-air temperature, $V_{CC\pm}$ = ± 15V (unless otherwise noted)

PARAMETER		TEST CONDITIONS		T_A (2)	TLE2072M			TLE2072AM			UNIT
					MIN	TYP	MAX	MIN	TYP	MAX	
V_{IO}	Input offset voltage	V_{IC} = 0, R_S = 50Ω	V_O = 0	25°C		1.1	6		0.7	3.5	mV
				Full range			10.5			8	
a_{VIO}	Temperature coefficient of input offset voltage			Full range		2.4	25(1)		2.4	25(1)	μV/°C
I_{IO}	Input offset current	V_{IC} = 0	V_O = 0	25°C		6	100		6	100	pA
				Full range			20			20	nA
I_{IB}	Input bias current			25°C		20	175		20	175	pA
				Full range			60			60	nA
V_{ICR}	Common-mode input voltage range	R_S = 50Ω		25°C	15 to −11	15 to −11.9		15 to −11	15 to −11.9		V
				Full range	15 to −10.8			15 to −10.8			
V_{OM+}	Maximum positive peak output voltage swing	I_O = − 200mA		25°C	13.8	14.1		13.8	14.1		V
				Full range	13.6			13.6			
		I_O = − 2mA		25°C	13.5	13.9		13.5	13.9		
				Full range	13.3			13.3			
		I_O = − 20mA		25°C	11.5	12.3		11.5	12.3		
				Full range	11.4			11.4			
V_{OM-}	Maximum negative peak output voltage swing	I_O = 200mA		25°C	−13.8	−14.2		−13.8	−14.2		V
				Full range	−13.6			−13.6			
		I_O = 2mA		25°C	−13.5	−14		−13.5	−14		
				Full range	−13.3			−13.3			
		I_O = 20mA		25°C	−11.5	−12.4		−11.5	−12.4		
				Full range	−11.4			−11.4			
A_{VD}	Large-signal differential voltage amplification	V_O = ± 10V	R_L = 600Ω	25°C	80	96		80	96		dB
				Full range	78			78			
			R_L = 2kΩ	25°C	90	109		90	109		
				Full range	89			89			
			R_L = 10kΩ	25°C	95	118		95	118		
				Full range	93			93			
r_i	Input resistance	V_{IC} = 0		25°C		10^{12}			10^{12}		Ω
c_i	Input capacitance	V_{IC} = 0	Common mode	25°C		7.5			7.5		pF
			Differential	25°C		2.5			2.5		
z_o	Open-loop output impedance	f = 1MHz		25°C		80			80		Ω
CMRR	Common-mode rejection ratio	V_{IC} = V_{ICRmin}, V_O = 0	R_S = 50Ω	25°C	80	98		80	98		dB
				Full range	78			78			
k_{SVR}	Supply-voltage rejection ratio ($\Delta V_{CC\pm}$ /ΔV_{IO})	$V_{CC\pm}$ = ± 5V to ± 15V		25°C	82	99		82	99		dB
		V_O = 0	R_S = 50Ω	Full range	80			80			

Copyright © 2026 Texas Instruments Incorporated

6.25 TLE2072M Electrical Characteristics (continued)

at specified free-air temperature, $V_{CC\pm}$ = ± 15V (unless otherwise noted)

PARAMETER		TEST CONDITIONS		T_A (2)	TLE2072M			TLE2072AM			UNIT
					MIN	TYP	MAX	MIN	TYP	MAX	
I_{CC}	Supply current (both channels)	V_O = 0	No load	25°C	2.7	3.1	3.6	2.7	3.1	3.6	mA
				Full range			3.6			3.6	
a_x	Crosstalk attenuation	V_{IC} = 0	R_L = 2kΩ	25°C		120			120		dB
I_{OS}	Short-circuit output current	V_O = 0	V_{ID} = 1V	25°C	−30	−45		−30	−45		mA
			V_{ID} = − 1V		30	48		30	48		

(1) On products compliant to MIL-PRF-38535, Class B, this parameter is not production tested.
(2) Full range is − 55°C to 125°C.

6.26 TLE2072M Operating Characteristics

at specified free-air temperature, $V_{CC\pm}$ = ± 15V

PARAMETER		TEST CONDITIONS		T_A (2)	TLE2072M			TLE2072AM			UNIT
					MIN	TYP	MAX	MIN	TYP	MAX	
SR+	Positive slew rate	$V_{O(PP)}$ = 10V, R_L = 2kΩ	A_{VD} = −1, CL = 100pF	25°C	28	40		28	40		V/µs
				Full range	20			20			
SR−	Negative slew rate			25°C	30	45		30	45		V/µs
				Full range	20			20			
t_s	Settling time	A_{VD} = − 1, 10V step, R_L = 1kΩ, C_L = 100pF	To 10mV	25°C		0.4			0.4		µs
			To 1mV			1.5			1.5		
V_n	Equivalent input noise voltage	R_S = 20Ω	f = 10Hz	25°C		48	85(1)		48	85(1)	nV/√Hz
			f = 10kHz			12	17(1)		12	17(1)	
$V_{N(PP)}$	Peak-to-peak equivalent input noise voltage		f = 10Hz to 10kHz	25°C		6			6		µV
			f = 0.1Hz to 10Hz			0.6			0.6		
I_n	Equivalent input noise current	V_{IC} = 0	f = 10kHz	25°C		2.8			2.8		fA /√Hz
THD + N	Total harmonic distortion plus noise	$V_{O(PP)}$ = 20V, f = 1kHz, R_S = 25Ω	A_{VD} = 10, R_L = 2kΩ	25°C		0.008%			0.008%		
B_1	Unity-gain bandwidth	V_I = 10mV, C_L = 25pF	R_L = 2kΩ	25°C	8(1)	10		8(1)	10		MHz
B_{OM}	Maximum output-swing bandwidth	$V_{O(PP)}$ = 20V, R_L = 2kΩ	A_{VD} = − 1, C_L = 25pF	25°C	478(1)	637		478(1)	637		kHz
φ_m	Phase margin at unity gain	V_I = 10mV, C_L = 25pF	R_L= 2kΩ	25°C		57°			57°		

(1) On products compliant to MIL-PRF-38535, Class B, this parameter is not production tested.
(2) Full range is − 55°C to 125°C.

6.27 TLE2074C Electrical Characteristics

at specified free-air temperature, $V_{CC\pm}$ = ± 5V (unless otherwise noted)

PARAMETER		TEST CONDITIONS		T_A (1)	TLE2074C			TLE2074AC			UNIT
					MIN	TYP	MAX	MIN	TYP	MAX	
V_{IO}	Input offset voltage	V_{IC} = 0, R_S = 50Ω	V_O = 0	25°C		−1.6	5		−0.5	3	mV
				Full range			7.1			5.1	
a_{VIO}	Temperature coefficient of input offset voltage			Full range		10.1	30		10.1	30	μV/°C
I_{IO}	Input offset current	V_{IC} = 0	V_O = 0	25°C		15	100		15	100	pA
				Full range			1400			1400	
I_{IB}	Input bias current			25°C		20	175		20	175	pA
				Full range			5000			5000	
V_{ICR}	Common-mode input voltage range	R_S = 50Ω		25°C	5 to −1	5 to −1.9		5 to −1	5 to −1.9		V
				Full range	5 to −0.9			5 to −0.9			
V_{OM+}	Maximum positive peak output voltage swing	I_O = − 200mA		25°C	3.8	4.985		3.8	4.985		V
		I_O = − 2mA		25°C	3.5	4.925		3.5	4.925		
		I_O = − 20mA		25°C	1.5	4.5		1.5	4.5		
V_{OM-}	Maximum negative peak output voltage swing	I_O = 200mA		25°C	−3.5	-4.985		−3.5	-4.985		V
		I_O = 2mA		25°C	−3.7	-4.925		−3.7	-4.925		
		I_O = 20mA		25°C	−1.5	-4.5		−1.5	-4.5		
A_{VD}	Large-signal differential voltage amplification		R_L = 600Ω	25°C	80	91		80	91		dB
			R_L = 2kΩ	25°C	90	100		90	100		
			R_L = 10kΩ	25°C	95	106		95	106		
r_i	Input resistance	V_{IC} = 0	Common mode	25°C		100			100		MΩ
			Differential	25°C		6			6		TΩ
c_i	Input capacitance	V_{IC} = 0	Common mode	25°C		1			1		pF
			Differential	25°C		9			9		
z_o	Open-loop output impedance	I_O = 0A		25°C	See Figure 6-15			See Figure 6-15			Ω
CMRR	Common-mode rejection ratio	V_{IC} = V_{ICRmin}, V_O = 0	R_S = 50Ω	25°C		85			85		dB
k_{SVR}	Supply-voltage rejection ratio ($\Delta V_{CC\pm}/\Delta V_{IO}$)	$V_{CC\pm}$ = ± 5V to ± 15V		25°C	82	99		82	99		dB
		V_O = 0	R_S = 50Ω	Full range	80			80			
I_{CC}	Supply current (per amplifier)	V_O = 0	No load	25°C	1.35	2.4	2.8	1.35	2.4	2.8	mA
	Crosstalk attenuation	V_{IC} = 0	R_L = 2kΩ	25°C		120			120		dB
I_{OS}	Short-circuit output current			25°C		±65			±65		mA

(1) Full range is 0°C to 70°C.

Copyright © 2026 Texas Instruments Incorporated

6.28 TLE2074C Operating Characteristics

at specified free-air temperature, $V_{CC\pm}$ = ± 5V

PARAMETER		TEST CONDITIONS		T_A	TLE2074C			TLE2074AC			UNIT
					MIN	TYP	MAX	MIN	TYP	MAX	
SR	Slew rate	$V_{O(PP)}$ = ± 2.3V, A_{VD} = − 1, C_L = 20pF	R_L = 2kΩ	25°C		32			32		V/µs
t_s	Settling time	A_{VD} = − 1, 2V step	To 10mV	25°C		0.25			0.25		µs
			To 1mV			0.4			0.4		
V_n	Equivalent input noise voltage	R_S = 20Ω	f = 10Hz	25°C		48			48		nV/√Hz
			f = 10kHz			4.4			4.4		
$V_{N(PP)}$	Peak-to-peak equivalent input noise voltage		f = 0.1Hz to 10Hz			2.77			2.77		μV_{PP}
I_n	Equivalent input noise current	V_{IC} = 0	f = 1kHz	25°C		60			60		fA/√Hz
THD + N	Total harmonic distortion plus noise	V_O = 3V_{RMS}, G = 1, f = 1kHz, R_L = 10k		25°C		0.0032			0.0032		%
				25°C		90			90		dB
B_1	Unity-gain bandwidth			25°C		10.6			10.6		MHz
B_{OM}	Maximum output-swing bandwidth	A_{VD} = − 1	C_L = 25pF	25°C		300			300		kHz
φ_m	Phase margin at unity gain	V_I = 10mV, C_L = 25pF	R_L = 2kΩ	25°C		56°			56°		

Copyright © 2026 Texas Instruments Incorporated

6.29 TLE2074C Electrical Characteristics

at specified free-air temperature, $V_{CC\pm}$ = ± 15V (unless otherwise noted)

PARAMETER		TEST CONDITIONS		T_A (1)	TLE2074C			TLE2074AC			UNIT
					MIN	TYP	MAX	MIN	TYP	MAX	
V_{IO}	Input offset voltage	V_{IC} = 0, R_S = 50Ω	V_O = 0	25°C		−1.6	5		−0.5	3	mV
				Full range			7.1			5.1	
a_{VIO}	Temperature coefficient of input offset voltage			Full range		10.1	30		10.1	30	μV/°C
I_{IO}	Input offset current	V_{IC} = 0	V_O = 0	25°C		15	100		15	100	pA
				Full range			1400			1400	
I_{IB}	Input bias current			25°C		25	175		25	175	pA
				Full range			5000			5000	
V_{ICR}	Common-mode input voltage range	R_S = 50Ω		25°C	15 to −11	15 to −11.9		15 to −11	15 to −11.9		V
				Full range	15 to −10.9			15 to −10.9			
V_{OM+}	Maximum positive peak output voltage swing	I_O = − 200mA		25°C	13.8	14.985		13.8	14.985		V
		I_O = − 2mA		25°C	13.5	14.925		13.5	14.925		
		I_O = − 20mA		25°C	11.5	14.5		11.5	14.5		
V_{OM-}	Maximum negative peak output voltage swing	I_O = 200mA		25°C	−13.8	−14.985		−13.8	−14.985		V
		I_O = 2mA		25°C	−13.5	−14.925		−13.5	−14.925		
		I_O = 20mA		25°C	−11.5	−14.5		−11.5	−14.5		
A_{VD}	Large-signal differential voltage amplification		R_L = 600Ω	25°C	80	96		80	96		dB
			R_L = 2kΩ	25°C	90	109		90	109		
			R_L = 10kΩ	25°C	95	118		95	118		
r_i	Input resistance	V_{IC} = 0	Common mode	25°C		100			100		MΩ
			Differential	25°C		6			6		TΩ
c_i	Input capacitance	V_{IC} = 0	Common mode	25°C		7.5			7.5		pF
			Differential	25°C		2.5			2.5		
z_o	Open-loop output impedance	I_O = 0A		25°C	See Figure 6-15			See Figure 6-15			Ω
CMRR	Common-mode rejection ratio	V_{IC} = V_{ICRmin}, V_O = 0	R_S = 50Ω	25°C		98			98		dB
k_{SVR}	Supply-voltage rejection ratio ($\Delta V_{CC\pm}$ /ΔV_{IO})	$V_{CC\pm}$ = ± 5V to ± 15V		25°C	82	99		82	99		dB
I_{CC}	Supply current (per amplifier)	V_O = 0	No load	25°C	1.35	2.4	2.8	1.35	2.4	2.8	mA
	Crosstalk attenuation	V_{IC} = 0	R_L = 2kΩ	25°C		120			120		dB
I_{OS}	Short-circuit output current			25°C		±65			±65		mA

(1) Full range is 0°C to 70°C.

Copyright © 2026 Texas Instruments Incorporated

6.30 TLE2074C Operating Characteristics

at specified free-air temperature, $V_{CC\pm}$ = ± 15V

PARAMETER		TEST CONDITIONS		T_A	TLE2074C			TLE2074AC			UNIT
					MIN	TYP	MAX	MIN	TYP	MAX	
SR	Slew rate	$V_{O(PP)}$ = 10V, R_L = 2kΩ, A_{VD} = − 1, C_L = 20pF		25°C		32			32		V/µs
t_s	Settling time	A_{VD} = − 1, 10V step	To 10mV	25°C		0.4			0.4		µs
			To 1mV			1.5			1.5		
V_n	Equivalent input noise voltage	R_S = 20Ω	f = 10Hz	25°C		48			48		nV√Hz
			f = 10kHz			4.4			4.4		
$V_{N(PP)}$	Peak-to-peak equivalent input noise voltage		f = 1.0Hz to 10kHz	25°C		2.77			2.77		µVpp
I_n	Equivalent input noise current	V_{IC} = 0	f = 1kHz	25°C		60			60		fA/√Hz
THD + N	Total harmonic distortion plus noise	V_O = 3V_{RMS}, G = 1, f = 1kHz, R_L = 10k		25°C		0.0032			0.0032		%
						90			90		dB
B_1	Unity-gain bandwidth			25°C		10.6			10.6		MHz
B_{OM}	Maximum output-swing bandwidth		A_{VD} = − 1, C_L = 25pF	25°C		300			300		kHz
φm	Phase margin at unity gain	V_I = 10mV, C_L = 25pF	R_L = 2kΩ	25°C		57°			57°		

6.31 TLE2074I Electrical Characteristics

at specified free-air temperature, $V_{CC\pm}$ = ± 5V (unless otherwise noted)

PARAMETER		TEST CONDITIONS		T_A (1)	TLE2074I			TLE2074AI			UNIT
					MIN	TYP	MAX	MIN	TYP	MAX	
V_{IO}	Input offset voltage	V_{IC} = 0, R_S = 50Ω	V_O = 0	25°C		−1.6	5		−0.5	3	mV
				Full range			9			7	
a_{VIO}	Temperature coefficient of input offset voltage			Full range		10.1	30		10.1	30	μV/°C
I_{IO}	Input offset current	V_{IC} = 0	V_O = 0	25°C		15	100		15	100	pA
				Full range			5			5	nA
I_{IB}	Input bias current			25°C		20	175		20	175	pA
				Full range			10			10	nA
V_{ICR}	Common-mode input voltage range	R_S = 50Ω		25°C	5 to −1	5 to −1.9		5 to −1	5 to −1.9		V
				Full range	5 to −0.8			5 to −0.8			
V_{OM+}	Maximum positive peak output voltage swing	I_O = − 200mA		25°C	3.8	4.985		3.8	4.985		V
		I_O = − 2mA		25°C	3.5	4.925		3.5	4.925		
		I_O = − 20mA		25°C	1.5	4.5		1.5	4.5		
V_{OM-}	Maximum negative peak output voltage swing	I_O = 200mA		25°C	−3.5	-4.985		−3.5	-4.985		V
		I_O = 2mA		25°C	−3.7	-4.925		−3.7	-4.925		
		I_O = 20mA		25°C	−1.5	-4.5		−1.5	-4.5		
A_{VD}	Large-signal differential voltage amplification		R_L = 600Ω	25°C	80	91		80	91		dB
			R_L = 2kΩ	25°C	90	100		90	100		
			R_L = 10kΩ	25°C	95	106		95	106		
r_i	Input resistance	V_{IC} = 0	Common mode	25°C		100			100		MΩ
			Differential	25°C		6			6		TΩ
c_i	Input capacitance	V_{IC} = 0	Common mode	25°C		1			1		pF
			Differential	25°C		9			9		
z_o	Open-loop output impedance	I_O = 0A		25°C	See Figure 6-15			See Figure 6-15			Ω
CMRR	Common-mode rejection ratio	V_{IC} = V_{ICRmin}, V_O = 0	R_S = 50Ω	25°C		85			85		dB
k_{SVR}	Supply-voltage rejection ratio ($\Delta V_{CC\pm}$ /ΔV_{IO})	$V_{CC\pm}$ = ± 5V to ± 15V		25°C	82	99		82	99		dB
		V_O = 0	R_S = 50Ω	Full range	80			80			
I_{CC}	Supply current (per amplifier)	V_O = 0	No load	25°C	1.35	2.4	2.8	1.35	2.4	2.8	mA
	Crosstalk attenuation	V_{IC} = 0	R_L = 2kΩ	25°C		120			120		dB
I_{OS}	Short-circuit output current			25°C		±65			±65		mA

(1) Full range is − 40°C to 85°C.

Copyright © 2026 Texas Instruments Incorporated

6.32 TLE2074I Operating Characteristics

at specified free-air temperature, $V_{CC\pm}$ = ± 5V

PARAMETER		TEST CONDITIONS		T_A	TLE2074I			TLE2074AI			UNIT
					MIN	TYP	MAX	MIN	TYP	MAX	
SR	Slew rate	$V_{O(PP)}$ = ± 2.3V, A_{VD} = − 1, C_L = 20pF	R_L = 2kΩ	25°C		32			32		V/µs
t_s	Settling time	A_{VD} = − 1, 2V step	To 10mV	25°C		0.25			0.25		µs
			To 1mV			0.4			0.4		
V_n	Equivalent input noise voltage	R_S = 20Ω	f = 10Hz	25°C		48			48		nV/√Hz
			f = 10kHz			4.4			4.4		
$V_{N(PP)}$	Peak-to-peak equivalent input noise voltage		f = 0.1Hz to 10Hz			2.77			2.77		μV_{PP}
I_n	Equivalent input noise current	V_{IC} = 0	f = 1kHz	25°C		60			60		fA/√Hz
THD + N	Total harmonic distortion plus noise	V_O = $3V_{RMS}$, G = 1, f = 1kHz	R_L= 10k	25°C		0.0032			0.0032		%
				25°C		90			90		dB
B_1	Unity-gain bandwidth			25°C		10.6			10.6		MHz
B_{OM}	Maximum output-swing bandwidth		A_{VD} = − 1, C_L = 25pF	25°C		300			300		kHz
φ_m	Phase margin at unity gain	V_I = 10mV, C_L = 25pF	R_L = 2kΩ	25°C		56°			56°		

6.33 TLE2074I Electrical Characteristics

at specified free-air temperature, $V_{CC\pm}$ = ± 15V (unless otherwise noted)

PARAMETER		TEST CONDITIONS		T_A (1)	TLE2074I			TLE2074AI			UNIT
					MIN	TYP	MAX	MIN	TYP	MAX	
V_{IO}	Input offset voltage	V_{IC} = 0, R_D = 50Ω	V_O = 0	25°C		−1.6	5		−0.5	3	mV
				Full range			9			7	
a_{VIO}	Temperature coefficient of input offset voltage			Full range		10.1	30		10.1	30	μV/°C
I_{IO}	Input offset current	V_{IC} = 0	V_O = 0	25°C		15	100		15	100	pA
				Full range			5			5	nA
I_{IB}	Input bias current			25°C		25	175		25	175	pA
				Full range			10			10	nA
V_{ICR}	Common-mode input voltage range	R_S = 50Ω		25°C	15 to −11	15 to −11.9		15 to −11	15 to −11.9		V
				Full range	15 to −10.8			15 to −10.8			
V_{OM+}	Maximum positive peak output voltage swing	I_O = − 200mA		25°C	13.8	14.985		13.8	14.985		V
		I_O = − 2mA		25°C	13.5	14.925		13.5	14.925		
		I_O = − 20mA		25°C	11.5	14.5		11.5	14.5		
V_{OM-}	Maximum negative peak output voltage swing	I_O = 200mA		25°C	−13.8	−14.985		−13.8	−14.985		V
		I_O = 2mA		25°C	−13.5	−14.925		−13.5	−14.925		
		I_O = 20mA		25°C	−11.5	−14.5		−11.5	−14.5		
A_{VD}	Large-signal differential voltage amplification		R_L= 600Ω	25°C	80	96		80	96		dB
			R_L = 2kΩ	25°C	90	109		90	109		
			R_L = 10kΩ	25°C	95	118		95	118		
r_i	Input resistance	V_{IC} = 0	Common mode	25°C		100			100		MΩ
			Differential	25°C		6			6		TΩ
c_i	Input capacitance	V_{IC} = 0	Common mode	25°C		1			1		pF
			Differential	25°C		9			9		
z_o	Open-loop output impedance	I_O = 0A		25°C	See Figure 6-15			See Figure 6-15			Ω
CMRR	Common-mode rejection ratio	V_{IC} = V_{ICRmin}, V_O = 0	R_S = 50Ω	25°C		98			98		dB
k_{SVR}	Supply-voltage rejection ratio ($\Delta V_{CC\pm}/\Delta V_{IO}$)	$V_{CC\pm}$ = ± 5V to ± 15V, V_O = 0,R_S = 50Ω		25°C	82	99		82	99		dB
I_{CC}	Supply current (per amplifier)	V_O = 0	No load	25°C	1.35	2.4	2.8	1.35	2.4	2.8	mA
	Crosstalk attenuation	V_{IC} = 0	R_L = 2kΩ	25°C		120			120		dB
I_{OS}	Short-circuit output current			25°C		±65			±65		mA

(1) Full range is − 40°C to 85°C.

Copyright © 2026 Texas Instruments Incorporated

6.34 TLE2074I Operating Characteristics

at specified free-air temperature, $V_{CC\pm}$ = ± 15V

PARAMETER		TEST CONDITIONS		T_A	TLE2074I			TLE2074AI			UNIT
					MIN	TYP	MAX	MIN	TYP	MAX	
SR	Slew rate	$V_{O(PP)}$ = 10V, R_L = 2kΩ, A_{VD} = − 1, C_L = 20pF		25°C		32			32		V/µs
t_s	Settling time	A_{VD} = − 1, 10V step	To 10mV	25°C		0.4			0.4		µs
			To 1mV			1.5			1.5		
V_n	Equivalent input noise voltage	R_S = 20Ω	f = 10Hz	25°C		48			48		nV√Hz
			f = 10kHz			4.4			4.4		
$V_{N(PP)}$	Peak-to-peak equivalent input noise voltage		f = 1.0Hz to 10kHz	25°C		2.77			2.77		µVpp
I_n	Equivalent input noise current	V_{IC} = 0	f = 1kHz	25°C		60			60		fA/√Hz
THD+ N	Total harmonic distortion plus noise	V_O = 3V_{RMS}, G = 1	R_L = 10kf = 1kHz	25°C		0.0032			0.0032		%
						90			90		dB
B_1	Unity-gain bandwidth			25°C		10.6			10.6		MHz
B_{OM}	Maximum output-swing bandwidth		A_{VD} = − 1, C_L = 25pF	25°C		300			300		kHz
φm	Phase margin at unity gain	V_I = 10mV, C_L = 25pF	R_L = 2kΩ	25°C		57°			57°		

6.35 TLE2074M Electrical Characteristics

at specified free-air temperature, $V_{CC\pm}$ = ± 5V (unless otherwise noted)

PARAMETER			TEST CONDITIONS		T_A [2]	TLE2074M			TLE2074AM			UNIT
						MIN	TYP	MAX	MIN	TYP	MAX	
V_{IO}	Input offset voltage		V_{IC} = 0, R_S = 50Ω	V_O = 0	25°C		−1.6	5		−0.5	3	mV
					Full range			10.5			8.5	
a_{VIO}	Temperature coefficient of input offset voltage				Full range		10.1	30[1]		10.1	30[1]	μV/°C
I_{IO}	Input offset current		V_{IC} = 0	V_O = 0	25°C		15	100		15	100	pA
					Full range			20			20	nA
I_{IB}	Input bias current				25°C		20	175		20	175	pA
					Full range			60			60	nA
V_{ICR}	Common-mode input voltage range		R_S = 50Ω		25°C	5 to −1	5 to −1.9		5 to −1	5 to −1.9		V
					Full range	5 to −0.8			5 to −0.8			
V_{OM+}	Maximum positive peak output voltage swing		I_O = − 200mA		25°C	3.8	4.1		3.8	4.1		V
					Full range	3.6			3.6			
			I_O = − 2mA		25°C	3.5	3.9		3.5	3.9		
					Full range	3.3			3.3			
			I_O = − 20mA		25°C	1.5	2.3		1.5	2.3		
					Full range	1.4			1.4			
V_{OM-}	Maximum negative peak output voltage swing		I_O = 200mA		25°C	−3.8	−4.2		−3.8	−4.2		V
					Full range	−3.6			−3.6			
			I_O = 2mA		25°C	−3.5	−4.1		−3.5	−4.1		
					Full range	−3.3			−3.3			
			I_O = 20mA		25°C	−1.5	−2.4		−1.5	−2.4		
					Full range	−1.4			−1.4			
A_{VD}	Large-signal differential voltage amplification		V_O = ± 2.3V	R_L = 600Ω	25°C	80	91		80	91		dB
					Full range	78			78			
				R_L = 2kΩ	25°C	90	100		90	100		
					Full range	88			88			
				R_L = 10kΩ	25°C	95	106		95	106		
					Full range	93			93			
r_i	Input resistance		V_{IC} = 0		25°C		10^{12}			10^{12}		Ω
c_i	Input capacitance	Common mode	V_{IC} = 0		25°C		11			11		pF
		Differential			25°C		2.5			2.5		
z_o	Open-loop output impedance		f = 1MHz		25°C		80			80		Ω
CMRR	Common-mode rejection ratio		V_{IC} = V_{ICRmin}, V_O = 0	R_S = 50Ω	25°C	70	89		70	89		dB
					Full range	68			68			
k_{SVR}	Supply-voltage rejection ratio ($\Delta V_{CC\pm}/\Delta V_{IO}$)		$V_{CC\pm}$ = ± 5V to ± 15V		25°C	82	99		82	99		dB
			V_O = 0	R_S = 50Ω	Full range	80			80			

Copyright © 2026 Texas Instruments Incorporated

6.35 TLE2074M Electrical Characteristics (continued)

at specified free-air temperature, $V_{CC\pm}$ = ± 5V (unless otherwise noted)

PARAMETER		TEST CONDITIONS		T_A (2)	TLE2074M			TLE2074AM			UNIT
					MIN	TYP	MAX	MIN	TYP	MAX	
I_{CC}	Supply current (per amplifier)	V_O = 0	No load	25°C	5.2	6.3	7.5	5.2	6.3	7.5	mA
				Full range			7.5			7.5	
	Crosstalk attenuation	V_{IC} = 0	R_L = 2kΩ	25°C		120			120		dB
I_{OS}	Short-circuit output current	V_O = 0	V_{ID} = 1V	25°C		–35			–35		mA
			V_{ID} = − 1V			45			45		

6.36 TLE2074M Operating Characteristics

at specified free-air temperature, $V_{CC\pm}$ = ± 5V

PARAMETER		TEST CONDITIONS		T_A (1)	TLE2074M			TLE2074AM			UNIT
					MIN	TYP	MAX	MIN	TYP	MAX	
SR+	Positive slew rate	$V_{O(PP)}$ = ± 2.3V, A_{VD} = − 1, C_L = 100pF	R_L = 2kΩ	25°C		35			35		V/µs
				Full range	18 (2)			18 (2)			
SR−	Negative slew rate			25°C		38			38		V/µs
				Full range	18 (2)			18 (2)			
t_s	Settling time	A_{VD} = − 1, 2V step, R_L = 1kΩ, C_L = 100pF	To 10mV	25°C		0.25			0.25		µs
			To 1mV			0.4			0.4		
V_n	Equivalent input noise voltage	R_S = 20Ω	f = 10Hz	25°C		48	85 (2)		48	85 (2)	nV/√Hz
			f = 10kHz			12	17 (2)		12	17 (2)	
$V_{N(PP)}$	Peak-to-peak equivalent input noise voltage		f = 10Hz to 10kHz	25°C		6			6		µV
			f = 0.1Hz to 10Hz			0.6			0.6		
I_n	Equivalent input noise current	V_{IC} = 0	f = 10kHz	25°C		2.8			2.8		fA/√Hz
THD + N	Total harmonic distortion plus noise	$V_{O(PP)}$ = 5V, f = 1kHz, R_S = 25Ω	A_{VD} = 10, R_L = 2kΩ,	25°C		0.013%			0.013%		
B_1	Unity-gain bandwidth	V_I = 10mV, C_L = 25pF	R_L = 2kΩ	25°C		9.4			9.4		MHz
B_{OM}	Maximum output-swing bandwidth	$V_{O(PP)}$ = 4V, R_L = 2kΩ	A_{VD} = − 1, C_L = 25pF	25°C		2.8			2.8		MHz
φ_m	Phase margin at unity gain	V_I = 10mV, C_L = 25pF	R_L = 2kΩ	25°C		56°			56°		

(1) Full range is −55°C to 125°C.
(2) On products compliant to MIL-PRF-38535, Class B, this parameter is not production tested.

6.37 TLE2074M Electrical Characteristics

at specified free-air temperature, $V_{CC\pm}$ = ± 15V (unless otherwise noted)

PARAMETER		TEST CONDITIONS		T_A (1)	TLE2074M			TLE2074AM			UNIT
					MIN	TYP	MAX	MIN	TYP	MAX	
V_{IO}	Input offset voltage	V_{IC} = 0, R_S = 50Ω	V_O = 0	25°C		−1.6	5		−0.5	3	mV
				Full range			10.5			8.5	
a_{VIO}	Temperature coefficient of input offset voltage			Full range		10.1	30(2)		10.1	30(2)	μV/°C
I_{IO}	Input offset current	V_{IC} = 0	V_O = 0	25°C		15	100		15	100	pA
				Full range			20			20	nA
I_{IB}	Input bias current			25°C		25	175		25	175	pA
				Full range			60			60	nA
V_{ICR}	Common-mode input voltage range	R_S = 50Ω		25°C	15 to −11	15 to −11.9		15 to −11	15 to −11.9		V
				Full range	15 to −10.8			15 to −10.8			
V_{OM+}	Maximum positive peak output voltage swing	I_O = − 200mA		25°C	13.8	14.1		13.8	14.1		V
				Full range	13.6			13.6			
		I_O = − 2mA		25°C	13.5	13.9		13.5	13.9		
				Full range	13.3			13.3			
		I_O = − 20mA		25°C	11.5	12.3		11.5	12.3		
				Full range	11.4			11.4			
V_{OM-}	Maximum negative peak output voltage swing	I_O = 200mA		25°C	−13.8	−14.2		−13.8	−14.2		V
				Full range	−13.6			−13.6			
		I_O = 2mA		25°C	−13.5	−14		−13.5	−14		
				Full range	−13.3			−13.3			
		I_O = 20mA		25°C	−11.5	−12.4		−11.5	−12.4		
				Full range	−11.4			−11.4			
A_{VD}	Large-signal differential voltage amplification	V_O = ± 10V	R_L = 600Ω	25°C	80	96		80	96		dB
				Full range	78			78			
			R_L = 2kΩ	25°C	90	109		90	109		
				Full range	88			88			
			R_L = 10kΩ	25°C	95	118		95	118		
				Full range	93			93			
r_i	Input resistance	V_{IC} = 0		25°C		10^{12}			10^{12}		Ω
c_i	Input capacitance, Common mode	V_{IC} = 0		25°C		7.5			7.5		pF
	Input capacitance, Differential			25°C		2.5		2.5			
z_o	Open-loop output impedance	f = 1MHz		25°C		80			80		Ω
CMRR	Common-mode rejection ratio	V_{IC} = V_{ICRmin}, V_O = 0	R_S = 50Ω	25°C	80	98		80	98		dB
				Full range	78			78			
k_{SVR}	Supply-voltage rejection ratio ($\Delta V_{CC\pm}/\Delta V_{IO}$)	$V_{CC\pm}$ = ± 5V to ± 15V		25°C	82	99		82	99		dB
		V_O = 0	R_S = 50Ω	Full range	80			80			

Copyright © 2026 Texas Instruments Incorporated

6.37 TLE2074M Electrical Characteristics (continued)

at specified free-air temperature, $V_{CC\pm}$ = ± 15V (unless otherwise noted)

PARAMETER		TEST CONDITIONS		T_A (1)	TLE2074M			TLE2074AM			UNIT
					MIN	TYP	MAX	MIN	TYP	MAX	
I_{CC}	Supply current (four amplifiers)	V_O = 0	No load	25°C	5.2	6.5	7.5	5.2	6.5	7.5	mA
				Full range			7.5			7.5	
	Crosstalk attenuation	V_{IC} = 0	R_L = 2kΩ	25°C		120			120		dB
I_{OS}	Short-circuit output current	V_O = 0	V_{ID} = 1V	25°C	–30	–45		–30	–45		mA
			V_{ID} = − 1V		30	48		30	48		

(1) Full range is − 55°C to 125°C.
(2) On products compliant to MIL-PRF-38535, Class B, this parameter is not production tested.

6.38 TLE2074M Operating Characteristics

at specified free-air temperature, $V_{CC\pm}$ = ± 15V

PARAMETER		TEST CONDITIONS		T_A (1)	TLE2074M			TLE2074AM			UNIT
					MIN	TYP	MAX	MIN	TYP	MAX	
SR+	Positive slew rate	$V_{O(PP)}$ = 10V, R_L = 2kΩ	A_{VD} = − 1, C_L = 100pF	25°C	25	40		25	40		V/µs
				Full range	17			17			
SR−	Negative slew rate			25°C	30	45		30	45		V/µs
				Full range	20			20			
t_s	Settling time	A_{VD} = − 1, 10V step, R_L = 1kΩ, C_L = 100pF	To 10mV	25°C		0.4			0.4		µs
			To 1mV			1.5			1.5		
V_n	Equivalent input noise voltage	R_S = 20Ω	f = 10Hz	25°C		48	85 (2)		48	85 (2)	nV/√Hz
			f = 10kHz			12	17 (2)		12	17 (2)	
$V_{N(PP)}$	Peak-to-peak equivalent input noise voltage		f = 10Hz to 10kHz	25°C		6			6		µV
			f = 0Hz to 10Hz			0.6			0.6		
I_n	Equivalent input noise current	V_{IC} = 0	f = 10kHz	25°C		2.8			2.8		fA/√Hz
THD + N	Total harmonic distortion plus noise	$V_{O(PP)}$ = 20V, f = 1kHz, R_S = 25Ω	A_{VD} = 10, R_L = 2kΩ	25°C		0.008%			0.008%		
B_1	Unity-gain bandwidth	V_I = 10mV, C_L = 25pF	R_L = 2kΩ	25°C	8 (2)	10		8 (2)	10		MHz
B_{OM}	Maximum output-swing bandwidth	$V_{O(PP)}$ = 20V, R_L = 2kΩ	A_{VD} = − 1, C_L = 25pF	25°C	478 (2)	637		478 (2)	637		kHz
φ_m	Phase margin at unity gain	V_I = 10mV, C_L = 25pF	R_L = 2kΩ	25°C		57°			57°		

(1) Full range is − 55°C to 125°C.
(2) On products compliant to MIL-PRF-38535, Class B, this parameter is not production tested.

6.39 Typical Characteristics

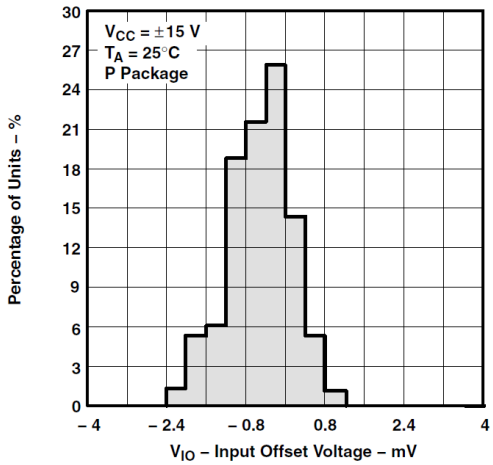

Figure 6-1. Distribution of TLE2071 Input Offset Voltage

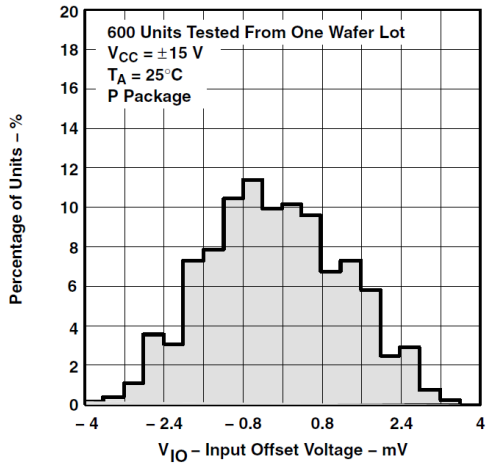

Figure 6-2. Distribution of TLE2072 Input Offset Voltage

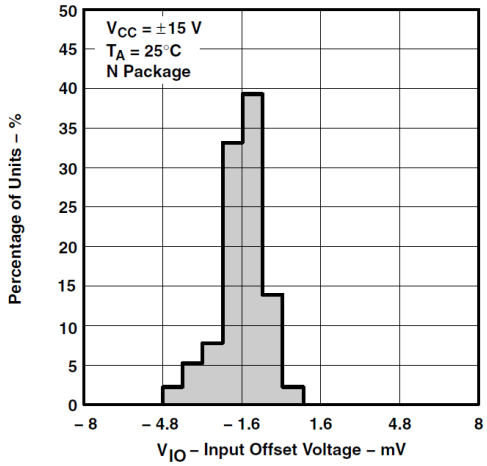

Figure 6-3. Distribution of TLE2074 Input Offset Voltage

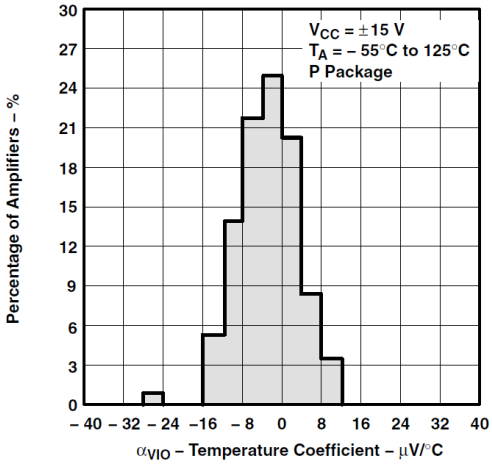

Figure 6-4. Distribution of TLE2071 Input Offset Voltage Temperature Coefficient

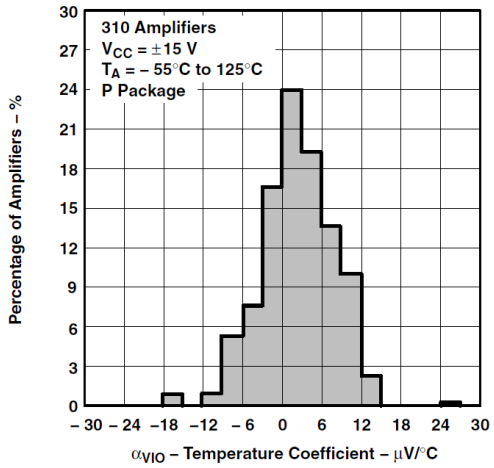

Figure 6-5. Distribution of TLE2072 Input Offset Voltage Temperature Coefficient

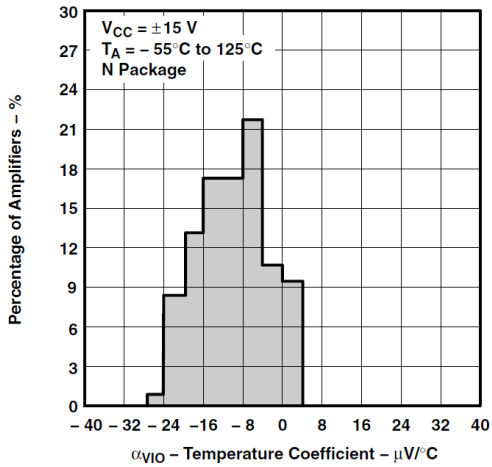

Figure 6-6. Distribution of TLE2074 Input Offset Voltage Temperature Coefficient

Copyright © 2026 Texas Instruments Incorporated

6.39 Typical Characteristics (continued)

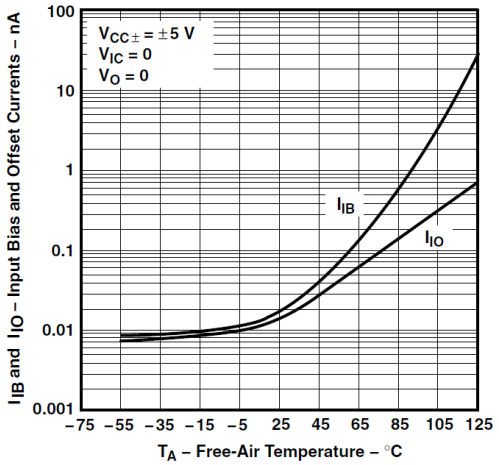

Figure 6-7. Input Bias Current and Input Offset Current vs Free-Air Temperature

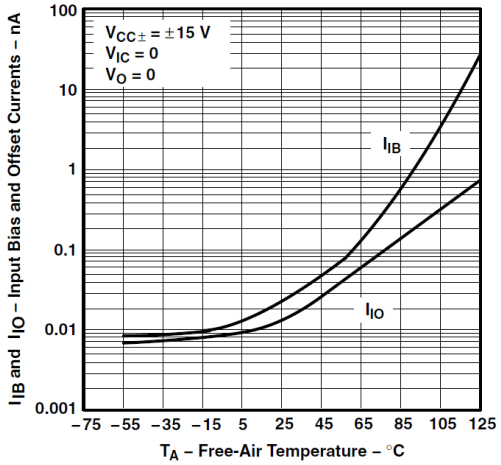

Figure 6-8. Input Bias Current and Input Offset Current vs Free-Air Temperature

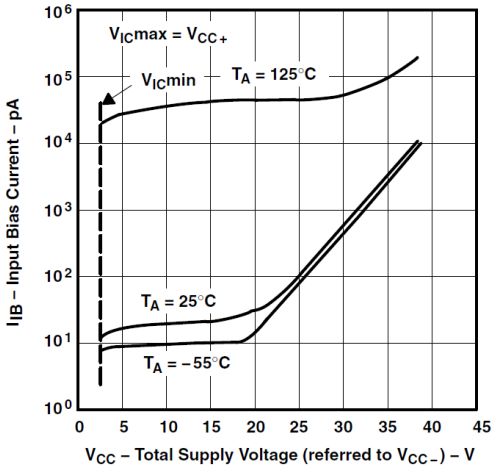

Figure 6-9. Input Bias Current vs Total Supply Voltage

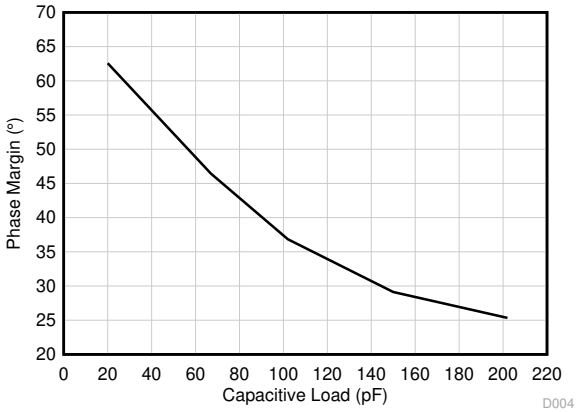

Figure 6-10. Phase Margin vs Load Capacitance

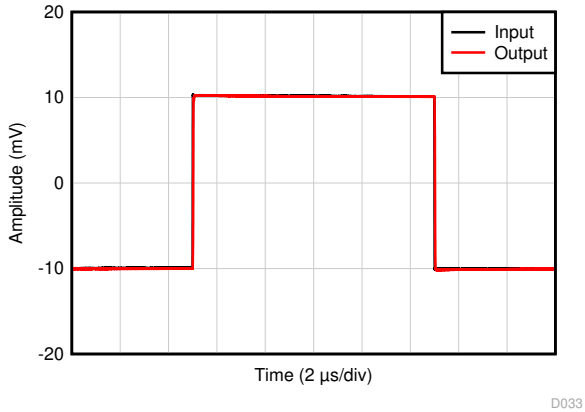

Figure 6-11. Non-inverting Large-Signal Pulse Response

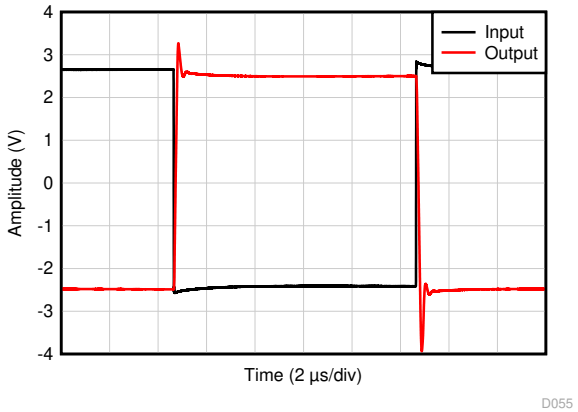

Figure 6-12. Non-inverting Large-Signal Pulse Response

6.39 Typical Characteristics (continued)

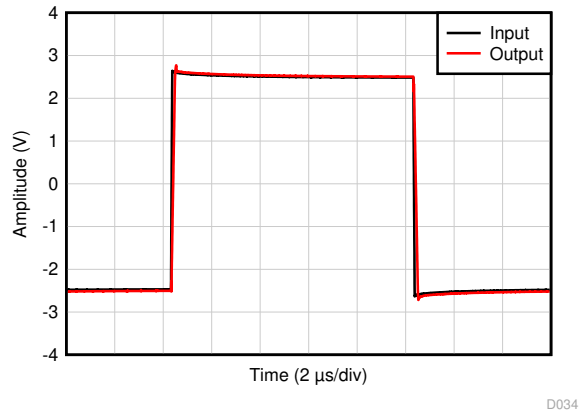

Figure 6-13. Small-Signal Pulse Response

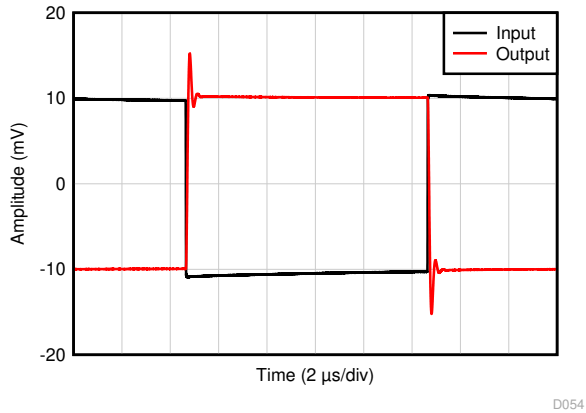

Figure 6-14. Small-Signal Pulse Response

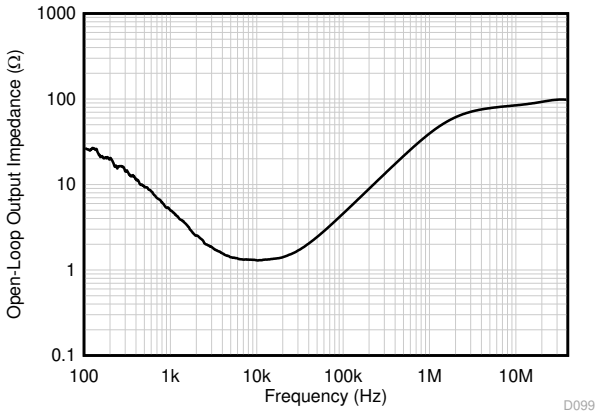

Figure 6-15. Open-Loop Output Impedance vs Frequency

Copyright © 2026 Texas Instruments Incorporated

7 Application and Implementation

Note

Information in the following applications sections is not part of the TI component specification, and TI does not warrant its accuracy or completeness. TI's customers are responsible for determining suitability of components for their purposes, as well as validating and testing their design implementation to confirm system functionality.

7.1 Application Information

7.1.1 Input Characteristics

The TLE207x, TLE207xA, and TLE207xB are specified with a minimum and a maximum input voltage that if exceeded at either input can cause the device to malfunction. Because of the extremely high input impedance and resulting low bias current requirements, the TLE207x, TLE207xA, and TLE207xB are well suited for low-level signal processing; however, leakage currents on printed-circuit boards and sockets can easily exceed bias current requirements and cause degradation in system performance. Including guard rings around inputs is considered to be good practice (see Figure 7-1). These guards can be driven from a low-impedance source at the same voltage level as the common-mode input.

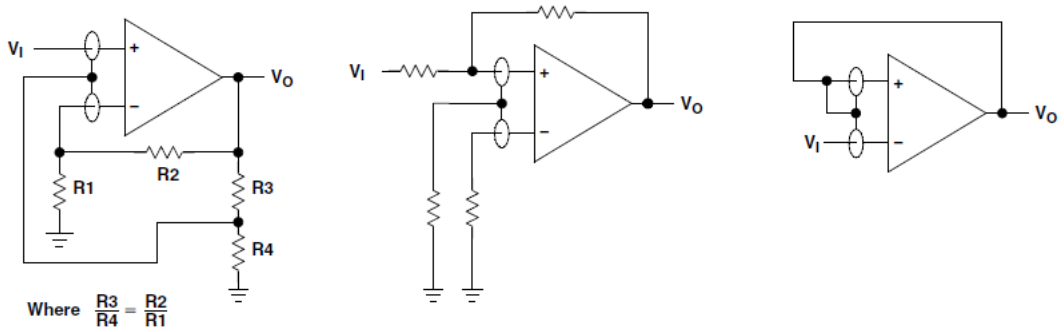

Figure 7-1. Use of Guard Rings

8 Device and Documentation Support

TI offers an extensive line of development tools. Tools and software to evaluate the performance of the device, generate code, and develop solutions are listed below.

8.1 Receiving Notification of Documentation Updates

To receive notification of documentation updates, navigate to the device product folder on ti.com. Click on *Notifications* to register and receive a weekly digest of any product information that has changed. For change details, review the revision history included in any revised document.

8.2 Support Resources

TI E2E™ support forums are an engineer's go-to source for fast, verified answers and design help — straight from the experts. Search existing answers or ask your own question to get the quick design help you need.

Linked content is provided "AS IS" by the respective contributors. They do not constitute TI specifications and do not necessarily reflect TI's views; see TI's Terms of Use.

8.3 Trademarks

TI E2E™ is a trademark of Texas Instruments.
All trademarks are the property of their respective owners.

8.4 Electrostatic Discharge Caution

This integrated circuit can be damaged by ESD. Texas Instruments recommends that all integrated circuits be handled with appropriate precautions. Failure to observe proper handling and installation procedures can cause damage.

ESD damage can range from subtle performance degradation to complete device failure. Precision integrated circuits may be more susceptible to damage because very small parametric changes could cause the device not to meet its published specifications.

8.5 Glossary

TI Glossary	This glossary lists and explains terms, acronyms, and definitions.

9 Revision History

NOTE: Page numbers for previous revisions may differ from page numbers in the current version.

Changes from Revision C (February 1997) to Revision D (January 2025)	Page
• Deleted "On chip offset voltage trimming for improved DC performance"	1
• Deleted "Direct upgrades to TL05x, TL07x, and TL08x Operational Amplifiers"	1
• Changed Low bias current from ±1pA to ±15pA	1
• Removed Total current in and out of VCC	7
• Changed Supply voltage values	7
• Changed Common mode input voltage input range	7
• Changed minimum from –19V to 0V	7
• Changed Maximum Positive peak output voltage swing typical value from 4.1V to 4.985V	8
• Changed Maximum Positive peak output voltage swing typical value from 3.9V to 4.925V	8
• Changed Maximum Positive peak output voltage swing typical value from 2.3V to 4.5V	8
• Deleted Full range values in I_{OS} CMRR	8
• Changed Maximum negative peak output voltage swing typical value from -4.2V to -4.985V	8
• Changed Maximum negative peak output voltage swing typical value from -4.1V to -4.925V	8
• Changed Maximum negative peak output voltage swing typical value from −2.4V to −4.5V	8
• Deleted Full range values in A_{VD}	8
• Changed Input resistance separated for differential and common mode, values to 100MΩ and 6TΩ	8
• Changed Input capacitance from 11pF to 1pF, 2.9pF to 9pF	8
• Changed CMRR typical value from 89dB to 85dB	8
• Changed Supply current values from 1.6mA to 2.48mA and 2.2mA to 2.92mA	8

Copyright © 2026 Texas Instruments Incorporated

- Changed Short circuit output current values from −35mA to ±65mA. 8
- Changed Slew rate typical values from 35V/µs to 32V/µs in EC table of specifications. 9
- Merged positive and negative slew rates in EC table of specifications. 9
- Deleted maximum value for Equivalent input noise voltage and at 10Khz typical value updated from 12nV/√Hz to 4.4nV/√Hz in EC table of specifications. 9
- Changed Peak to peak equivalent input noise voltage, from 0.6µV_{PP} to 2.77µV_{PP} in EC table of specifications. 9
- Changed Equivalent input noise current from 2.8fA/√Hz to 60fA/√Hz at 1KHz in EC table of specifications. 9
- Changed THD+N value from 0.013% to 0.0032% and 90dB in EC table of specifications. 9
- Changed Unity gain bandwidth values from 9.4MHz to 10.6MHz in EC table of specifications. 9
- Changed Maximum output swing bandwidth from 2.8Mhz to 300KHz in EC table of specifications. 9
- Changed V_{OM+} values from 14.1V to 14.985V at 200µA from 13.9V to 14.925V at 2mA, from 12.3V to 14.5V at 20mA. 9
- Changed V_{OM-} valued from –14.2V to –14.985V at 200µA from –14V to –14.925V at 2mA, from -12.4V to -14.5V at 20mA. 9
- Deleted Full range for CMRR. 9
- Changed Input capacitance Differential mode from 2.5pF to 9pF. 9
- Changed Input capacitance Common mode from 7.5pF to 1pF. 9
- Changed Supply current typical from 1.7mA to 2.48mA. 9
- Changed Supply current maximum from 2.2mA to 2.92mA. 9
- Changed Short-circuit output current typical value to ±65mA. 9
- Updated Phase Margin vs Load Capacitance plot. 44
- Updated Non-inverting Large-Signal Pulse Response plot. 44
- Updated Small-Signal Pulse Response plot. 44
- Updated Open-Loop Output Impedance vs Frequency plot. 44
- Removed several plots from *Typical Characteristics* section. 44

10 Mechanical, Packaging, and Orderable Information

The following pages include mechanical, packaging, and orderable information. This information is the most current data available for the designated devices. This data is subject to change without notice and revision of this document. For browser-based versions of this data sheet, refer to the left-hand navigation.

PACKAGING INFORMATION

Orderable part number	Status (1)	Material type (2)	Package | Pins	Package qty | Carrier	RoHS (3)	Lead finish/ Ball material (4)	MSL rating/ Peak reflow (5)	Op temp (°C)	Part marking (6)
5962-9460201Q2A	Active	Production	LCCC (FK) | 20	55 | TUBE	No	SNPB	N/A for Pkg Type	-55 to 125	5962-9460201Q2A TLE2071 MFKB
5962-9460201QPA	Active	Production	CDIP (JG) | 8	50 | TUBE	No	SNPB	N/A for Pkg Type	-55 to 125	9460201QPA TLE2071M
5962-9460202Q2A	Active	Production	LCCC (FK) | 20	55 | TUBE	No	SNPB	N/A for Pkg Type	-55 to 125	5962-9460202Q2A TLE2072 MFKB
5962-9460202QHA	Active	Production	CFP (U) | 10	25 | TUBE	No	SNPB	N/A for Pkg Type	-55 to 125	9460202QHA TLE2072M
5962-9460202QPA	Active	Production	CDIP (JG) | 8	50 | TUBE	No	SNPB	N/A for Pkg Type	-55 to 125	9460202QPA TLE2072M
5962-9460203Q2A	Active	Production	LCCC (FK) | 20	55 | TUBE	No	SNPB	N/A for Pkg Type	-55 to 125	5962-9460203Q2A TLE2074 MFKB
5962-9460203QCA	Active	Production	CDIP (J) | 14	25 | TUBE	No	SNPB	N/A for Pkg Type	-55 to 125	5962-9460203QC A TLE2074MJB
5962-9460204Q2A	Active	Production	LCCC (FK) | 20	55 | TUBE	No	SNPB	N/A for Pkg Type	-55 to 125	5962 9460204Q2A TLE2071 AMFKB
5962-9460204QHA	Active	Production	CFP (U) | 10	25 | TUBE	No	SNPB	N/A for Pkg Type	-55 to 125	9460204QHA TLE2071AM
5962-9460204QPA	Active	Production	CDIP (JG) | 8	50 | TUBE	No	SNPB	N/A for Pkg Type	-55 to 125	9460204QPA TLE2071AM
5962-9460205Q2A	Active	Production	LCCC (FK) | 20	55 | TUBE	No	SNPB	N/A for Pkg Type	-55 to 125	5962-9460205Q2A TLE2072 AMFKB
5962-9460205QHA	Active	Production	CFP (U) | 10	25 | TUBE	No	SNPB	N/A for Pkg Type	-55 to 125	9460205QHA TLE2072AM

Orderable part number	Status (1)	Material type (2)	Package | Pins	Package qty | Carrier	RoHS (3)	Lead finish/ Ball material (4)	MSL rating/ Peak reflow (5)	Op temp (°C)	Part marking (6)
5962-9460205QPA	Active	Production	CDIP (JG) | 8	50 | TUBE	No	SNPB	N/A for Pkg Type	-55 to 125	9460205QPA TLE2072AM
5962-9460206Q2A	Active	Production	LCCC (FK) | 20	55 | TUBE	No	SNPB	N/A for Pkg Type	-55 to 125	5962-9460206Q2A TLE2074 AMFKB
5962-9460206QCA	Active	Production	CDIP (J) | 14	25 | TUBE	No	SNPB	N/A for Pkg Type	-55 to 125	5962-9460206QCA TLE2074AMJB
5962-9460206QDA	Active	Production	CFP (W) | 14	25 | TUBE	No	SNPB	N/A for Pkg Type	-55 to 125	5962-9460206QDA TLE2074AMWB
TLE2071ACD	Obsolete	Production	SOIC (D) | 8	-	-	Call TI	Call TI	0 to 70	2071AC
TLE2071ACDR	Active	Production	SOIC (D) | 8	2500 | LARGE T&R	Yes	NIPDAU	Level-1-260C-UNLIM	-40 to 85	2071AC
TLE2071ACDR.A	Active	Production	SOIC (D) | 8	2500 | LARGE T&R	Yes	NIPDAU	Level-1-260C-UNLIM	-40 to 85	2071AC
TLE2071ACP	Active	Production	PDIP (P) | 8	50 | TUBE	Yes	NIPDAU	N/A for Pkg Type	-40 to 85	TLE2071AC
TLE2071ACP.A	Active	Production	PDIP (P) | 8	50 | TUBE	Yes	NIPDAU	N/A for Pkg Type	-40 to 85	TLE2071AC
TLE2071AID	Obsolete	Production	SOIC (D) | 8	-	-	Call TI	Call TI	-40 to 85	2071AI
TLE2071AIDR	Active	Production	SOIC (D) | 8	2500 | LARGE T&R	Yes	NIPDAU	Level-1-260C-UNLIM	-40 to 85	2071AI
TLE2071AIDR.A	Active	Production	SOIC (D) | 8	2500 | LARGE T&R	Yes	NIPDAU	Level-1-260C-UNLIM	-40 to 85	2071AI
TLE2071AIP	Active	Production	PDIP (P) | 8	50 | TUBE	Yes	NIPDAU	N/A for Pkg Type	-40 to 85	TLE2071AI
TLE2071AIP.A	Active	Production	PDIP (P) | 8	50 | TUBE	Yes	NIPDAU	N/A for Pkg Type	-40 to 85	TLE2071AI
TLE2071AMFKB	Active	Production	LCCC (FK) | 20	55 | TUBE	No	SNPB	N/A for Pkg Type	-55 to 125	5962 9460204Q2A TLE2071 AMFKB
TLE2071AMFKB.A	Active	Production	LCCC (FK) | 20	55 | TUBE	No	SNPB	N/A for Pkg Type	-55 to 125	5962 9460204Q2A TLE2071 AMFKB
TLE2071AMJG	Active	Production	CDIP (JG) | 8	50 | TUBE	No	SNPB	N/A for Pkg Type	-55 to 125	TLE2071 AMJG
TLE2071AMJG.A	Active	Production	CDIP (JG) | 8	50 | TUBE	No	SNPB	N/A for Pkg Type	-55 to 125	TLE2071 AMJG

Orderable part number	Status (1)	Material type (2)	Package | Pins	Package qty | Carrier	RoHS (3)	Lead finish/ Ball material (4)	MSL rating/ Peak reflow (5)	Op temp (°C)	Part marking (6)
TLE2071AMJGB	Active	Production	CDIP (JG) | 8	50 | TUBE	No	SNPB	N/A for Pkg Type	-55 to 125	9460204QPA TLE2071AM
TLE2071AMJGB.A	Active	Production	CDIP (JG) | 8	50 | TUBE	No	SNPB	N/A for Pkg Type	-55 to 125	9460204QPA TLE2071AM
TLE2071AMUB	Active	Production	CFP (U) | 10	25 | TUBE	No	SNPB	N/A for Pkg Type	-55 to 125	9460204QHA TLE2071AM
TLE2071AMUB.A	Active	Production	CFP (U) | 10	25 | TUBE	No	SNPB	N/A for Pkg Type	-55 to 125	9460204QHA TLE2071AM
TLE2071CD	Obsolete	Production	SOIC (D) | 8	-	-	Call TI	Call TI	0 to 70	2071C
TLE2071CP	Active	Production	PDIP (P) | 8	50 | TUBE	Yes	NIPDAU	N/A for Pkg Type	-40 to 85	TLE2071CP
TLE2071CP.A	Active	Production	PDIP (P) | 8	50 | TUBE	Yes	NIPDAU	N/A for Pkg Type	-40 to 85	TLE2071CP
TLE2071CPE4	Active	Production	PDIP (P) | 8	50 | TUBE	-	Call TI	Call TI	-40 to 85	
TLE2071ID	Obsolete	Production	SOIC (D) | 8	-	-	Call TI	Call TI	-40 to 85	2071I
TLE2071IDR	Active	Production	SOIC (D) | 8	2500 | LARGE T&R	Yes	NIPDAU	Level-1-260C-UNLIM	-40 to 85	2071I
TLE2071IDR.A	Active	Production	SOIC (D) | 8	2500 | LARGE T&R	Yes	NIPDAU	Level-1-260C-UNLIM	-40 to 85	2071I
TLE2071IP	Active	Production	PDIP (P) | 8	50 | TUBE	Yes	NIPDAU	N/A for Pkg Type	-40 to 85	TLE2071IP
TLE2071IP.A	Active	Production	PDIP (P) | 8	50 | TUBE	Yes	NIPDAU	N/A for Pkg Type	-40 to 85	TLE2071IP
TLE2071MFKB	Active	Production	LCCC (FK) | 20	55 | TUBE	No	SNPB	N/A for Pkg Type	-55 to 125	5962-9460201Q2A TLE2071 MFKB
TLE2071MFKB.A	Active	Production	LCCC (FK) | 20	55 | TUBE	No	SNPB	N/A for Pkg Type	-55 to 125	5962-9460201Q2A TLE2071 MFKB
TLE2071MJG	Active	Production	CDIP (JG) | 8	50 | TUBE	No	SNPB	N/A for Pkg Type	-55 to 125	TLE2071MJG
TLE2071MJG.A	Active	Production	CDIP (JG) | 8	50 | TUBE	No	SNPB	N/A for Pkg Type	-55 to 125	TLE2071MJG
TLE2071MJGB	Active	Production	CDIP (JG) | 8	50 | TUBE	No	SNPB	N/A for Pkg Type	-55 to 125	9460201QPA TLE2071M
TLE2071MJGB.A	Active	Production	CDIP (JG) | 8	50 | TUBE	No	SNPB	N/A for Pkg Type	-55 to 125	9460201QPA TLE2071M
TLE2072ACD	Obsolete	Production	SOIC (D) | 8	-	-	Call TI	Call TI	0 to 70	2072AC
TLE2072ACP	Active	Production	PDIP (P) | 8	50 | TUBE	Yes	NIPDAU	N/A for Pkg Type	-40 to 85	TLE2072AC
TLE2072ACP.A	Active	Production	PDIP (P) | 8	50 | TUBE	Yes	NIPDAU	N/A for Pkg Type	-40 to 85	TLE2072AC

Orderable part number	Status (1)	Material type (2)	Package | Pins	Package qty | Carrier	RoHS (3)	Lead finish/ Ball material (4)	MSL rating/ Peak reflow (5)	Op temp (°C)	Part marking (6)
TLE2072ACPE4	Active	Production	PDIP (P) | 8	50 | TUBE	-	Call TI	Call TI	-40 to 85	
TLE2072AID	Obsolete	Production	SOIC (D) | 8	-	-	Call TI	Call TI	-40 to 85	2072AI
TLE2072AIDR	Active	Production	SOIC (D) | 8	2500 | LARGE T&R	Yes	NIPDAU	Level-1-260C-UNLIM	-40 to 85	2072AI
TLE2072AIDR.A	Active	Production	SOIC (D) | 8	2500 | LARGE T&R	Yes	NIPDAU	Level-1-260C-UNLIM	-40 to 85	2072AI
TLE2072AIP	Active	Production	PDIP (P) | 8	50 | TUBE	Yes	NIPDAU	N/A for Pkg Type	-40 to 85	TLE2072AI
TLE2072AIP.A	Active	Production	PDIP (P) | 8	50 | TUBE	Yes	NIPDAU	N/A for Pkg Type	-40 to 85	TLE2072AI
TLE2072AMFKB	Active	Production	LCCC (FK) | 20	55 | TUBE	No	SNPB	N/A for Pkg Type	-55 to 125	5962-9460205Q2A TLE2072 AMFKB
TLE2072AMFKB.A	Active	Production	LCCC (FK) | 20	55 | TUBE	No	SNPB	N/A for Pkg Type	-55 to 125	5962-9460205Q2A TLE2072 AMFKB
TLE2072AMJG	Active	Production	CDIP (JG) | 8	50 | TUBE	No	SNPB	N/A for Pkg Type	-55 to 125	TLE2072 AMJG
TLE2072AMJG.A	Active	Production	CDIP (JG) | 8	50 | TUBE	No	SNPB	N/A for Pkg Type	-55 to 125	TLE2072 AMJG
TLE2072AMJGB	Active	Production	CDIP (JG) | 8	50 | TUBE	No	SNPB	N/A for Pkg Type	-55 to 125	9460205QPA TLE2072AM
TLE2072AMJGB.A	Active	Production	CDIP (JG) | 8	50 | TUBE	No	SNPB	N/A for Pkg Type	-55 to 125	9460205QPA TLE2072AM
TLE2072AMUB	Active	Production	CFP (U) | 10	25 | TUBE	No	SNPB	N/A for Pkg Type	-55 to 125	9460205QHA TLE2072AM
TLE2072AMUB.A	Active	Production	CFP (U) | 10	25 | TUBE	No	SNPB	N/A for Pkg Type	-55 to 125	9460205QHA TLE2072AM
TLE2072CD	Obsolete	Production	SOIC (D) | 8	-	-	Call TI	Call TI	-	2072C
TLE2072CDR	Active	Production	SOIC (D) | 8	2500 | LARGE T&R	Yes	NIPDAU	Level-1-260C-UNLIM	-	2072C
TLE2072CDR.A	Active	Production	SOIC (D) | 8	2500 | LARGE T&R	Yes	NIPDAU	Level-1-260C-UNLIM	-40 to 85	2072C
TLE2072CP	Active	Production	PDIP (P) | 8	50 | TUBE	Yes	NIPDAU	N/A for Pkg Type	-	TLE2072CP
TLE2072CP.A	Active	Production	PDIP (P) | 8	50 | TUBE	Yes	NIPDAU	N/A for Pkg Type	-40 to 85	TLE2072CP
TLE2072ID	Obsolete	Production	SOIC (D) | 8	-	-	Call TI	Call TI	-	2072I
TLE2072IDR	Active	Production	SOIC (D) | 8	2500 | LARGE T&R	Yes	NIPDAU	Level-1-260C-UNLIM	-40 to 85	2072I
TLE2072IDR.A	Active	Production	SOIC (D) | 8	2500 | LARGE T&R	Yes	NIPDAU	Level-1-260C-UNLIM	-40 to 85	2072I

Orderable part number	Status (1)	Material type (2)	Package | Pins	Package qty | Carrier	RoHS (3)	Lead finish/ Ball material (4)	MSL rating/ Peak reflow (5)	Op temp (°C)	Part marking (6)
TLE2072IDRG4	Active	Production	SOIC (D) | 8	2500 | LARGE T&R	-	Call TI	Call TI	-40 to 85	
TLE2072IP	Active	Production	PDIP (P) | 8	50 | TUBE	Yes	NIPDAU	N/A for Pkg Type	-	TLE2072IP
TLE2072IP.A	Active	Production	PDIP (P) | 8	50 | TUBE	Yes	NIPDAU	N/A for Pkg Type	-40 to 85	TLE2072IP
TLE2072MFKB	Active	Production	LCCC (FK) | 20	55 | TUBE	No	SNPB	N/A for Pkg Type	-55 to 125	5962-9460202Q2A TLE2072 MFKB
TLE2072MFKB.A	Active	Production	LCCC (FK) | 20	55 | TUBE	No	SNPB	N/A for Pkg Type	-55 to 125	5962-9460202Q2A TLE2072 MFKB
TLE2072MJG	Active	Production	CDIP (JG) | 8	50 | TUBE	No	SNPB	N/A for Pkg Type	-55 to 125	TLE2072MJG
TLE2072MJG.A	Active	Production	CDIP (JG) | 8	50 | TUBE	No	SNPB	N/A for Pkg Type	-55 to 125	TLE2072MJG
TLE2072MJGB	Active	Production	CDIP (JG) | 8	50 | TUBE	No	SNPB	N/A for Pkg Type	-55 to 125	9460202QPA TLE2072M
TLE2072MJGB.A	Active	Production	CDIP (JG) | 8	50 | TUBE	No	SNPB	N/A for Pkg Type	-55 to 125	9460202QPA TLE2072M
TLE2072MUB	Active	Production	CFP (U) | 10	25 | TUBE	No	SNPB	N/A for Pkg Type	-55 to 125	9460202QHA TLE2072M
TLE2072MUB.A	Active	Production	CFP (U) | 10	25 | TUBE	No	SNPB	N/A for Pkg Type	-55 to 125	9460202QHA TLE2072M
TLE2074ACDW	Active	Production	SOIC (DW) | 16	40 | TUBE	Yes	NIPDAU	Level-1-260C-UNLIM	0 to 70	TLE2074AC
TLE2074ACDW.A	Active	Production	SOIC (DW) | 16	40 | TUBE	Yes	NIPDAU	Level-1-260C-UNLIM	0 to 70	TLE2074AC
TLE2074ACN	Active	Production	PDIP (N) | 14	25 | TUBE	Yes	NIPDAU	N/A for Pkg Type	-	TLE2074ACN
TLE2074ACN.A	Active	Production	PDIP (N) | 14	25 | TUBE	Yes	NIPDAU	N/A for Pkg Type	-40 to 85	TLE2074ACN
TLE2074ACNE4	Active	Production	PDIP (N) | 14	25 | TUBE	-	Call TI	Call TI	See TLE2074ACN	
TLE2074AIDW	Active	Production	SOIC (DW) | 16	40 | TUBE	Yes	NIPDAU	Level-1-260C-UNLIM	-40 to 85	TLE2074AI
TLE2074AIDW.A	Active	Production	SOIC (DW) | 16	40 | TUBE	Yes	NIPDAU	Level-1-260C-UNLIM	-40 to 85	TLE2074AI
TLE2074AIN	Active	Production	PDIP (N) | 14	25 | TUBE	Yes	NIPDAU	N/A for Pkg Type	-	TLE2074AIN
TLE2074AIN.A	Active	Production	PDIP (N) | 14	25 | TUBE	Yes	NIPDAU	N/A for Pkg Type	-40 to 85	TLE2074AIN
TLE2074AINE4	Active	Production	PDIP (N) | 14	25 | TUBE	-	Call TI	Call TI	See TLE2074AIN	

Orderable part number	Status (1)	Material type (2)	Package | Pins	Package qty | Carrier	RoHS (3)	Lead finish/ Ball material (4)	MSL rating/ Peak reflow (5)	Op temp (°C)	Part marking (6)
TLE2074AMFKB	Active	Production	LCCC (FK) | 20	55 | TUBE	No	SNPB	N/A for Pkg Type	-55 to 125	5962-9460206Q2A TLE2074 AMFKB
TLE2074AMFKB.A	Active	Production	LCCC (FK) | 20	55 | TUBE	No	SNPB	N/A for Pkg Type	-55 to 125	5962-9460206Q2A TLE2074 AMFKB
TLE2074AMJ	Active	Production	CDIP (J) | 14	25 | TUBE	No	SNPB	N/A for Pkg Type	-55 to 125	TLE2074AMJ
TLE2074AMJ.A	Active	Production	CDIP (J) | 14	25 | TUBE	No	SNPB	N/A for Pkg Type	-55 to 125	TLE2074AMJ
TLE2074AMJB	Active	Production	CDIP (J) | 14	25 | TUBE	No	SNPB	N/A for Pkg Type	-55 to 125	5962-9460206QCA TLE2074AMJB
TLE2074AMJB.A	Active	Production	CDIP (J) | 14	25 | TUBE	No	SNPB	N/A for Pkg Type	-55 to 125	5962-9460206QCA TLE2074AMJB
TLE2074AMWB	Active	Production	CFP (W) | 14	25 | TUBE	No	SNPB	N/A for Pkg Type	-55 to 125	5962-9460206QDA TLE2074AMWB
TLE2074AMWB.A	Active	Production	CFP (W) | 14	25 | TUBE	No	SNPB	N/A for Pkg Type	-55 to 125	5962-9460206QDA TLE2074AMWB
TLE2074CDW	Active	Production	SOIC (DW) | 16	40 | TUBE	Yes	NIPDAU	Level-1-260C-UNLIM	0 to 70	TLE2074C
TLE2074CDW.A	Active	Production	SOIC (DW) | 16	40 | TUBE	Yes	NIPDAU	Level-1-260C-UNLIM	0 to 70	TLE2074C
TLE2074CDWR	Active	Production	SOIC (DW) | 16	2000 | LARGE T&R	Yes	NIPDAU	Level-1-260C-UNLIM	-	TLE2074C
TLE2074CDWR.A	Active	Production	SOIC (DW) | 16	2000 | LARGE T&R	Yes	NIPDAU	Level-1-260C-UNLIM	-40 to 85	TLE2074C
TLE2074CN	Active	Production	PDIP (N) | 14	25 | TUBE	Yes	NIPDAU	N/A for Pkg Type	-	TLE2074CN
TLE2074CN.A	Active	Production	PDIP (N) | 14	25 | TUBE	Yes	NIPDAU	N/A for Pkg Type	-40 to 85	TLE2074CN
TLE2074IDW	Active	Production	SOIC (DW) | 16	40 | TUBE	Yes	NIPDAU	Level-1-260C-UNLIM	-40 to 85	TLE2074I
TLE2074IDW.A	Active	Production	SOIC (DW) | 16	40 | TUBE	Yes	NIPDAU	Level-1-260C-UNLIM	-40 to 85	TLE2074I
TLE2074IDWG4	Active	Production	SOIC (DW) | 16	40 | TUBE	-	Call TI	Call TI	-40 to 85	
TLE2074IDWR	Active	Production	SOIC (DW) | 16	2000 | LARGE T&R	Yes	NIPDAU	Level-1-260C-UNLIM	-	TLE2074I
TLE2074IDWR.A	Active	Production	SOIC (DW) | 16	2000 | LARGE T&R	Yes	NIPDAU	Level-1-260C-UNLIM	-40 to 85	TLE2074I
TLE2074IN	Active	Production	PDIP (N) | 14	25 | TUBE	Yes	NIPDAU	N/A for Pkg Type	-	TLE2074IN

Orderable part number	Status (1)	Material type (2)	Package | Pins	Package qty | Carrier	RoHS (3)	Lead finish/ Ball material (4)	MSL rating/ Peak reflow (5)	Op temp (°C)	Part marking (6)
TLE2074IN.A	Active	Production	PDIP (N) | 14	25 | TUBE	Yes	NIPDAU	N/A for Pkg Type	-40 to 85	TLE2074IN
TLE2074MFKB	Active	Production	LCCC (FK) | 20	55 | TUBE	No	SNPB	N/A for Pkg Type	-55 to 125	5962-9460203Q2A TLE2074 MFKB
TLE2074MFKB.A	Active	Production	LCCC (FK) | 20	55 | TUBE	No	SNPB	N/A for Pkg Type	-55 to 125	5962-9460203Q2A TLE2074 MFKB
TLE2074MJ	Active	Production	CDIP (J) | 14	25 | TUBE	No	SNPB	N/A for Pkg Type	-55 to 125	TLE2074MJ
TLE2074MJ.A	Active	Production	CDIP (J) | 14	25 | TUBE	No	SNPB	N/A for Pkg Type	-55 to 125	TLE2074MJ
TLE2074MJB	Active	Production	CDIP (J) | 14	25 | TUBE	No	SNPB	N/A for Pkg Type	-55 to 125	5962-9460203QCA TLE2074MJB
TLE2074MJB.A	Active	Production	CDIP (J) | 14	25 | TUBE	No	SNPB	N/A for Pkg Type	-55 to 125	5962-9460203QCA TLE2074MJB

(1) **Status:** For more details on status, see our product life cycle.

(2) **Material type:** When designated, preproduction parts are prototypes/experimental devices, and are not yet approved or released for full production. Testing and final process, including without limitation quality assurance, reliability performance testing, and/or process qualification, may not yet be complete, and this item is subject to further changes or possible discontinuation. If available for ordering, purchases will be subject to an additional waiver at checkout, and are intended for early internal evaluation purposes only. These items are sold without warranties of any kind.

(3) **RoHS values:** Yes, No, RoHS Exempt. See the TI RoHS Statement for additional information and value definition.

(4) **Lead finish/Ball material:** Parts may have multiple material finish options. Finish options are separated by a vertical ruled line. Lead finish/Ball material values may wrap to two lines if the finish value exceeds the maximum column width.

(5) **MSL rating/Peak reflow:** The moisture sensitivity level ratings and peak solder (reflow) temperatures. In the event that a part has multiple moisture sensitivity ratings, only the lowest level per JEDEC standards is shown. Refer to the shipping label for the actual reflow temperature that will be used to mount the part to the printed circuit board.

(6) **Part marking:** There may be an additional marking, which relates to the logo, the lot trace code information, or the environmental category of the part.

Multiple part markings will be inside parentheses. Only one part marking contained in parentheses and separated by a "~" will appear on a part. If a line is indented then it is a continuation of the previous line and the two combined represent the entire part marking for that device.

Important Information and Disclaimer: The information provided on this page represents TI's knowledge and belief as of the date that it is provided. TI bases its knowledge and belief on information provided by third parties, and makes no representation or warranty as to the accuracy of such information. Efforts are underway to better integrate information from third parties. TI has taken and continues to take reasonable steps to provide representative and accurate information but may not have conducted destructive testing or chemical analysis on incoming materials and chemicals. TI and TI suppliers consider certain information to be proprietary, and thus CAS numbers and other limited information may not be available for release.

In no event shall TI's liability arising out of such information exceed the total purchase price of the TI part(s) at issue in this document sold by TI to Customer on an annual basis.

OTHER QUALIFIED VERSIONS OF TLE2071, TLE2071A, TLE2071AM, TLE2071M, TLE2072, TLE2072A, TLE2072AM, TLE2072M, TLE2074, TLE2074A, TLE2074AM, TLE2074M :

- Catalog : TLE2071A, TLE2071, TLE2072A, TLE2072, TLE2074A, TLE2074
- Automotive : TLE2071A-Q1, TLE2071A-Q1, TLE2072A-Q1, TLE2072A-Q1
- Military : TLE2071M, TLE2071AM, TLE2072M, TLE2072AM, TLE2074M, TLE2074AM

NOTE: Qualified Version Definitions:

- Catalog - TI's standard catalog product
- Automotive - Q100 devices qualified for high-reliability automotive applications targeting zero defects
- Military - QML certified for Military and Defense Applications

TAPE AND REEL INFORMATION

REEL DIMENSIONS

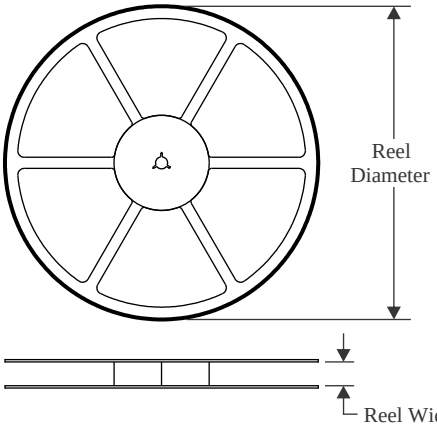

TAPE DIMENSIONS

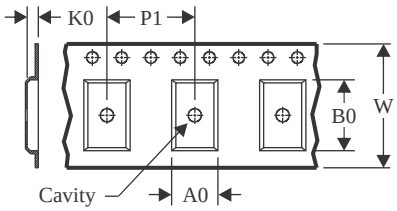

A0	Dimension designed to accommodate the component width
B0	Dimension designed to accommodate the component length
K0	Dimension designed to accommodate the component thickness
W	Overall width of the carrier tape
P1	Pitch between successive cavity centers

QUADRANT ASSIGNMENTS FOR PIN 1 ORIENTATION IN TAPE

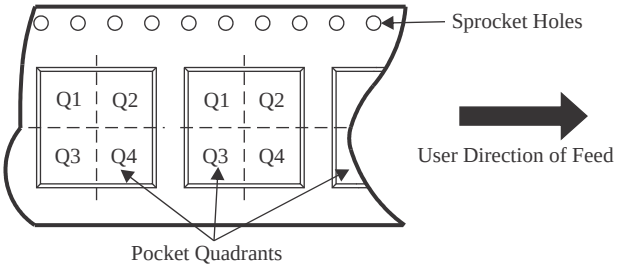

*All dimensions are nominal

Device	Package Type	Package Drawing	Pins	SPQ	Reel Diameter (mm)	Reel Width W1 (mm)	A0 (mm)	B0 (mm)	K0 (mm)	P1 (mm)	W (mm)	Pin1 Quadrant
TLE2071ACDR	SOIC	D	8	2500	330.0	12.4	6.4	5.2	2.1	8.0	12.0	Q1
TLE2071ACDR	SOIC	D	8	2500	330.0	12.4	6.4	5.2	2.1	8.0	12.0	Q1
TLE2071AIDR	SOIC	D	8	2500	330.0	12.4	6.4	5.2	2.1	8.0	12.0	Q1
TLE2071AIDR	SOIC	D	8	2500	330.0	12.4	6.4	5.2	2.1	8.0	12.0	Q1
TLE2071IDR	SOIC	D	8	2500	330.0	12.4	6.4	5.2	2.1	8.0	12.0	Q1
TLE2071IDR	SOIC	D	8	2500	330.0	12.4	6.4	5.2	2.1	8.0	12.0	Q1
TLE2072AIDR	SOIC	D	8	2500	330.0	12.4	6.4	5.2	2.1	8.0	12.0	Q1
TLE2072AIDR	SOIC	D	8	2500	330.0	12.4	6.4	5.2	2.1	8.0	12.0	Q1
TLE2072CDR	SOIC	D	8	2500	330.0	12.4	6.4	5.2	2.1	8.0	12.0	Q1
TLE2072CDR	SOIC	D	8	2500	330.0	12.4	6.4	5.2	2.1	8.0	12.0	Q1
TLE2072IDR	SOIC	D	8	2500	330.0	12.4	6.4	5.2	2.1	8.0	12.0	Q1
TLE2072IDR	SOIC	D	8	2500	330.0	12.4	6.4	5.2	2.1	8.0	12.0	Q1
TLE2074CDWR	SOIC	DW	16	2000	330.0	16.4	10.75	10.7	2.7	12.0	16.0	Q1
TLE2074IDWR	SOIC	DW	16	2000	330.0	16.4	10.75	10.7	2.7	12.0	16.0	Q1

TAPE AND REEL BOX DIMENSIONS

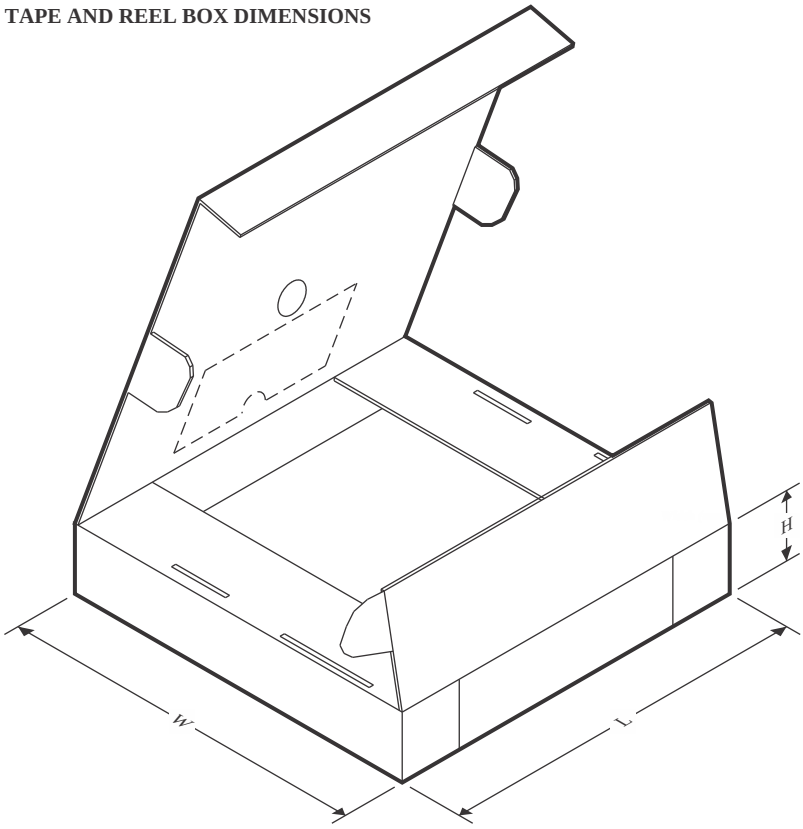

*All dimensions are nominal

Device	Package Type	Package Drawing	Pins	SPQ	Length (mm)	Width (mm)	Height (mm)
TLE2071ACDR	SOIC	D	8	2500	353.0	353.0	32.0
TLE2071ACDR	SOIC	D	8	2500	353.0	353.0	32.0
TLE2071AIDR	SOIC	D	8	2500	353.0	353.0	32.0
TLE2071AIDR	SOIC	D	8	2500	353.0	353.0	32.0
TLE2071IDR	SOIC	D	8	2500	353.0	353.0	32.0
TLE2071IDR	SOIC	D	8	2500	353.0	353.0	32.0
TLE2072AIDR	SOIC	D	8	2500	353.0	353.0	32.0
TLE2072AIDR	SOIC	D	8	2500	353.0	353.0	32.0
TLE2072CDR	SOIC	D	8	2500	353.0	353.0	32.0
TLE2072CDR	SOIC	D	8	2500	353.0	353.0	32.0
TLE2072IDR	SOIC	D	8	2500	353.0	353.0	32.0
TLE2072IDR	SOIC	D	8	2500	353.0	353.0	32.0
TLE2074CDWR	SOIC	DW	16	2000	350.0	350.0	43.0
TLE2074IDWR	SOIC	DW	16	2000	350.0	350.0	43.0

TUBE

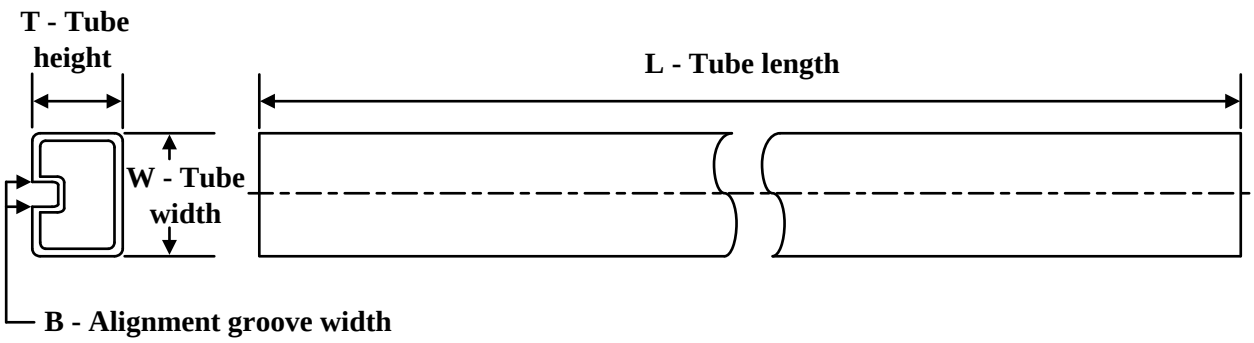

*All dimensions are nominal

Device	Package Name	Package Type	Pins	SPQ	L (mm)	W (mm)	T (µm)	B (mm)
5962-9460201Q2A	FK	LCCC	20	55	506.98	12.06	2030	NA
5962-9460202Q2A	FK	LCCC	20	55	506.98	12.06	2030	NA
5962-9460202QHA	U	CFP	10	25	506.98	26.16	6220	NA
5962-9460203Q2A	FK	LCCC	20	55	506.98	12.06	2030	NA
5962-9460204Q2A	FK	LCCC	20	55	506.98	12.06	2030	NA
5962-9460204QHA	U	CFP	10	25	506.98	26.16	6220	NA
5962-9460205Q2A	FK	LCCC	20	55	506.98	12.06	2030	NA
5962-9460205QHA	U	CFP	10	25	506.98	26.16	6220	NA
5962-9460206Q2A	FK	LCCC	20	55	506.98	12.06	2030	NA
5962-9460206QDA	W	CFP	14	25	506.98	26.16	6220	NA
TLE2071ACP	P	PDIP	8	50	506	13.97	11230	4.32
TLE2071ACP.A	P	PDIP	8	50	506	13.97	11230	4.32
TLE2071AIP	P	PDIP	8	50	506	13.97	11230	4.32
TLE2071AIP.A	P	PDIP	8	50	506	13.97	11230	4.32
TLE2071AMFKB	FK	LCCC	20	55	506.98	12.06	2030	NA
TLE2071AMFKB.A	FK	LCCC	20	55	506.98	12.06	2030	NA
TLE2071AMUB	U	CFP	10	25	506.98	26.16	6220	NA
TLE2071AMUB.A	U	CFP	10	25	506.98	26.16	6220	NA
TLE2071CP	P	PDIP	8	50	506	13.97	11230	4.32
TLE2071CP.A	P	PDIP	8	50	506	13.97	11230	4.32
TLE2071IP	P	PDIP	8	50	506	13.97	11230	4.32
TLE2071IP.A	P	PDIP	8	50	506	13.97	11230	4.32
TLE2071MFKB	FK	LCCC	20	55	506.98	12.06	2030	NA
TLE2071MFKB.A	FK	LCCC	20	55	506.98	12.06	2030	NA
TLE2072ACP	P	PDIP	8	50	506	13.97	11230	4.32
TLE2072ACP.A	P	PDIP	8	50	506	13.97	11230	4.32
TLE2072AIP	P	PDIP	8	50	506	13.97	11230	4.32
TLE2072AIP.A	P	PDIP	8	50	506	13.97	11230	4.32
TLE2072AMFKB	FK	LCCC	20	55	506.98	12.06	2030	NA

Device	Package Name	Package Type	Pins	SPQ	L (mm)	W (mm)	T (µm)	B (mm)
TLE2072AMFKB.A	FK	LCCC	20	55	506.98	12.06	2030	NA
TLE2072AMUB	U	CFP	10	25	506.98	26.16	6220	NA
TLE2072AMUB.A	U	CFP	10	25	506.98	26.16	6220	NA
TLE2072CP	P	PDIP	8	50	506	13.97	11230	4.32
TLE2072CP.A	P	PDIP	8	50	506	13.97	11230	4.32
TLE2072IP	P	PDIP	8	50	506	13.97	11230	4.32
TLE2072IP.A	P	PDIP	8	50	506	13.97	11230	4.32
TLE2072MFKB	FK	LCCC	20	55	506.98	12.06	2030	NA
TLE2072MFKB.A	FK	LCCC	20	55	506.98	12.06	2030	NA
TLE2072MUB	U	CFP	10	25	506.98	26.16	6220	NA
TLE2072MUB.A	U	CFP	10	25	506.98	26.16	6220	NA
TLE2074ACDW	DW	SOIC	16	40	506.98	12.7	4826	6.6
TLE2074ACDW.A	DW	SOIC	16	40	506.98	12.7	4826	6.6
TLE2074ACN	N	PDIP	14	25	506	13.97	11230	4.32
TLE2074ACN.A	N	PDIP	14	25	506	13.97	11230	4.32
TLE2074AIDW	DW	SOIC	16	40	506.98	12.7	4826	6.6
TLE2074AIDW.A	DW	SOIC	16	40	506.98	12.7	4826	6.6
TLE2074AIN	N	PDIP	14	25	506	13.97	11230	4.32
TLE2074AIN.A	N	PDIP	14	25	506	13.97	11230	4.32
TLE2074AMFKB	FK	LCCC	20	55	506.98	12.06	2030	NA
TLE2074AMFKB.A	FK	LCCC	20	55	506.98	12.06	2030	NA
TLE2074AMWB	W	CFP	14	25	506.98	26.16	6220	NA
TLE2074AMWB.A	W	CFP	14	25	506.98	26.16	6220	NA
TLE2074CDW	DW	SOIC	16	40	506.98	12.7	4826	6.6
TLE2074CDW.A	DW	SOIC	16	40	506.98	12.7	4826	6.6
TLE2074CN	N	PDIP	14	25	506	13.97	11230	4.32
TLE2074CN.A	N	PDIP	14	25	506	13.97	11230	4.32
TLE2074IDW	DW	SOIC	16	40	506.98	12.7	4826	6.6
TLE2074IDW.A	DW	SOIC	16	40	506.98	12.7	4826	6.6
TLE2074IN	N	PDIP	14	25	506	13.97	11230	4.32
TLE2074IN.A	N	PDIP	14	25	506	13.97	11230	4.32
TLE2074MFKB	FK	LCCC	20	55	506.98	12.06	2030	NA
TLE2074MFKB.A	FK	LCCC	20	55	506.98	12.06	2030	NA

W (R–GDFP–F14) CERAMIC DUAL FLATPACK

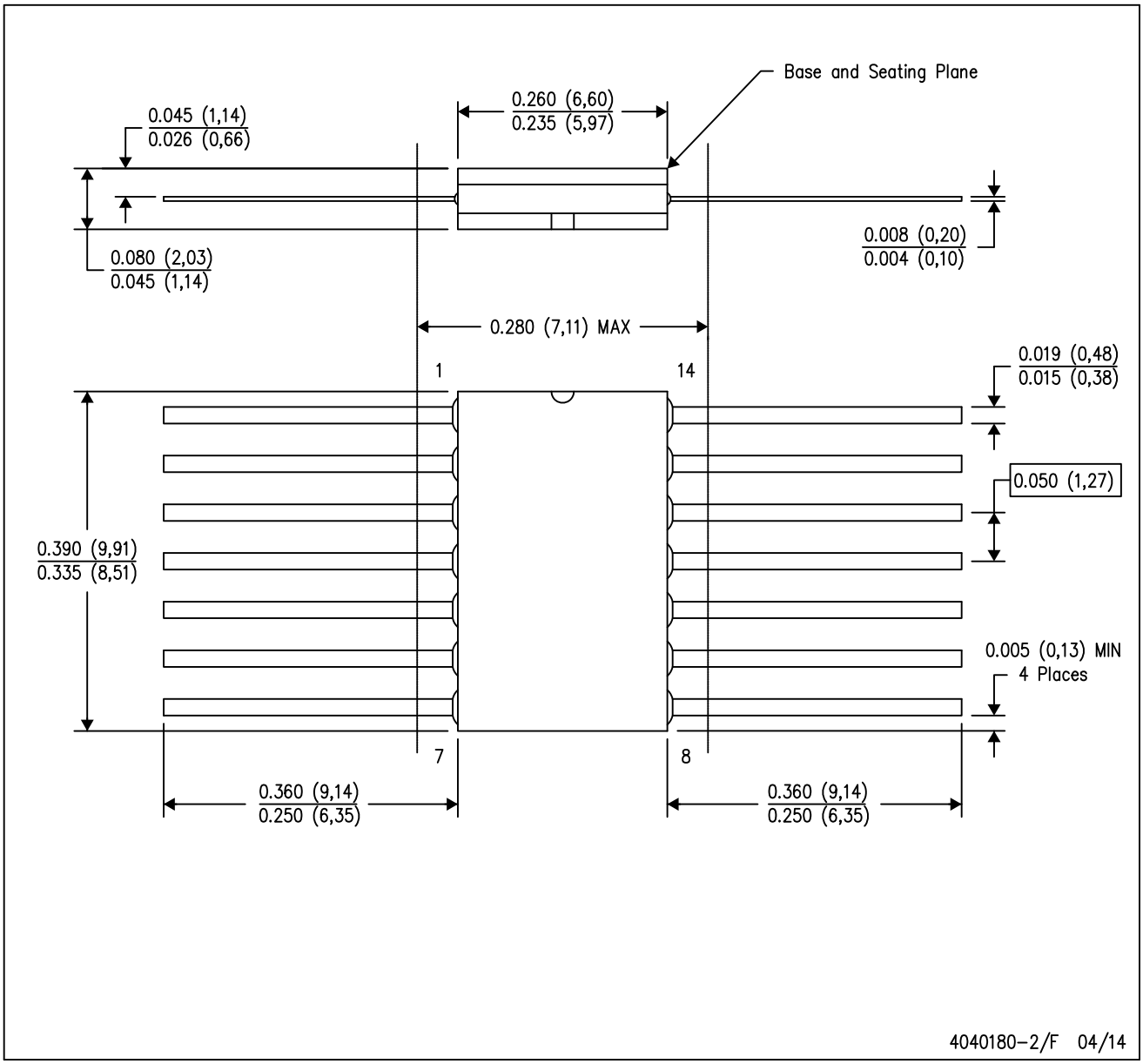

NOTES:
A. All linear dimensions are in inches (millimeters).
B. This drawing is subject to change without notice.
C. This package can be hermetically sealed with a ceramic lid using glass frit.
D. Index point is provided on cap for terminal identification only.
E. Falls within MIL STD 1835 GDFP1–F14

GENERIC PACKAGE VIEW

DW 16

SOIC - 2.65 mm max height

7.5 x 10.3, 1.27 mm pitch

SMALL OUTLINE INTEGRATED CIRCUIT

This image is a representation of the package family, actual package may vary.
Refer to the product data sheet for package details.

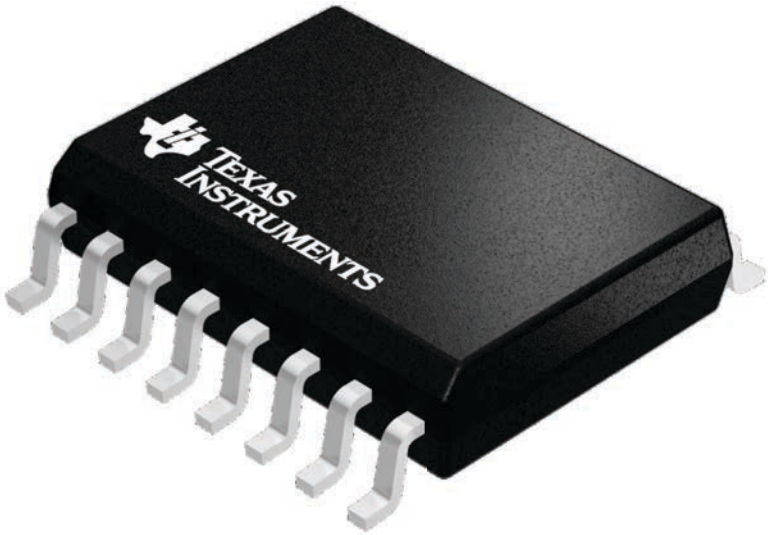

4224780/A

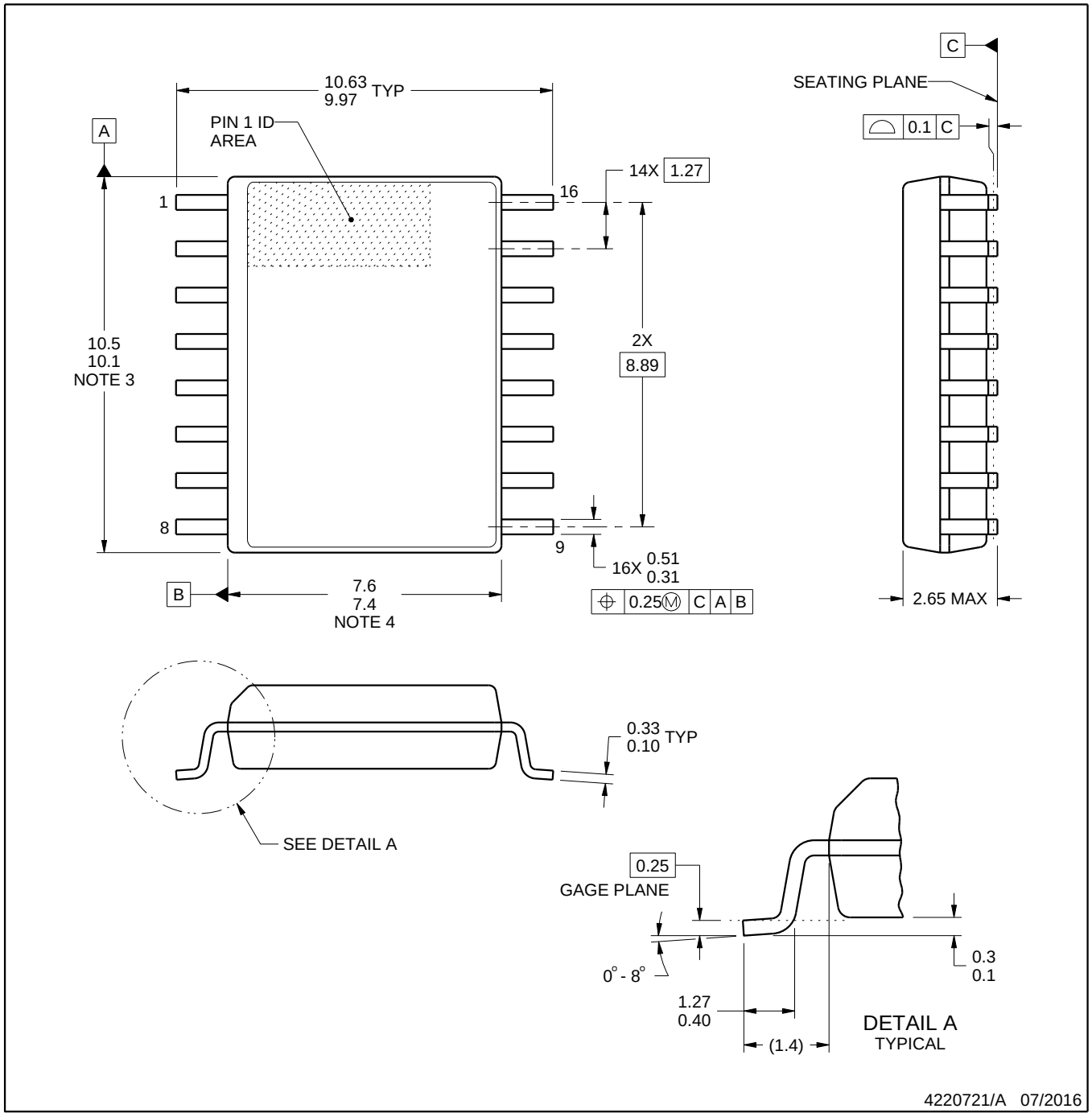

NOTES:

1. All linear dimensions are in millimeters. Dimensions in parenthesis are for reference only. Dimensioning and tolerancing per ASME Y14.5M.
2. This drawing is subject to change without notice.
3. This dimension does not include mold flash, protrusions, or gate burrs. Mold flash, protrusions, or gate burrs shall not exceed 0.15 mm, per side.
4. This dimension does not include interlead flash. Interlead flash shall not exceed 0.25 mm, per side.
5. Reference JEDEC registration MS-013.

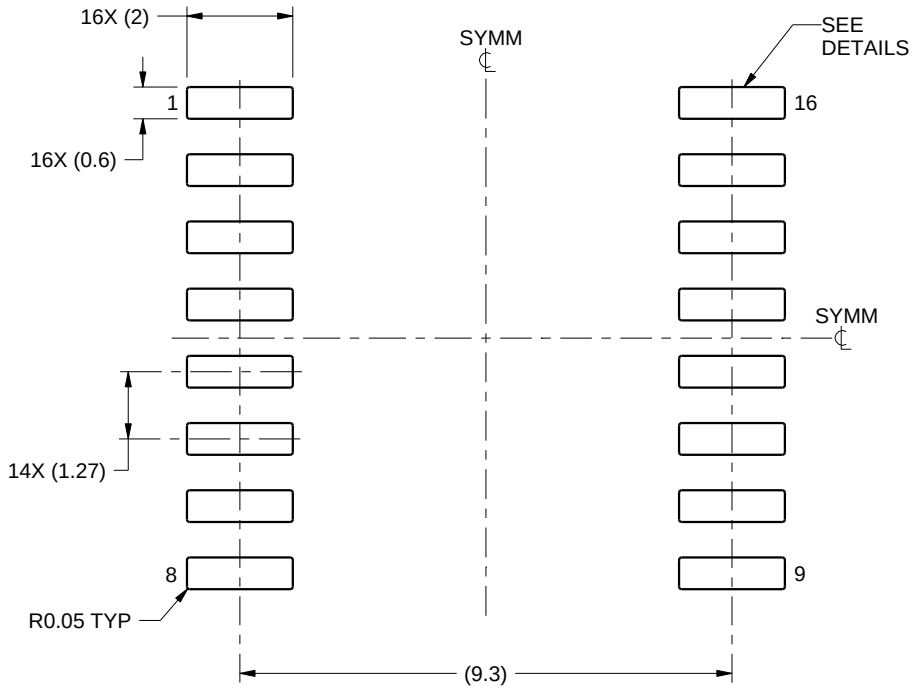

LAND PATTERN EXAMPLE
SCALE:7X

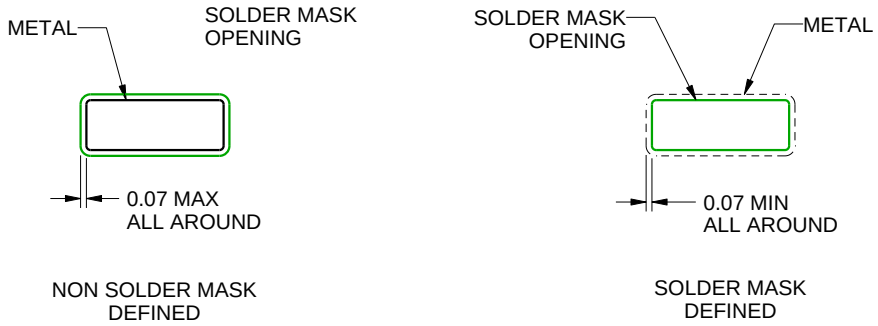

SOLDER MASK DETAILS

4220721/A 07/2016

NOTES: (continued)

6. Publication IPC-7351 may have alternate designs.
7. Solder mask tolerances between and around signal pads can vary based on board fabrication site.

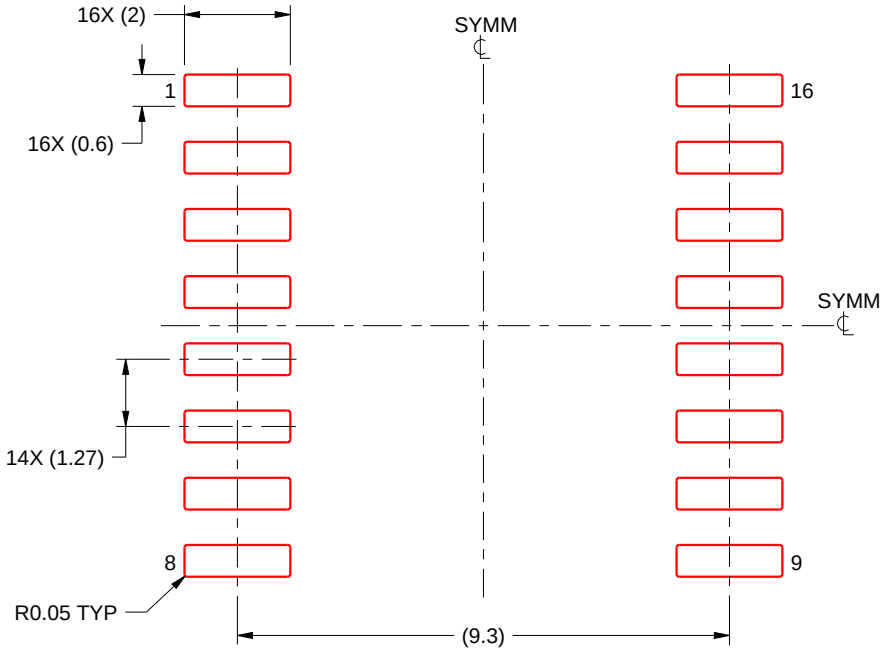

SOLDER PASTE EXAMPLE
BASED ON 0.125 mm THICK STENCIL
SCALE:7X

4220721/A 07/2016

NOTES: (continued)

8. Laser cutting apertures with trapezoidal walls and rounded corners may offer better paste release. IPC-7525 may have alternate design recommendations.
9. Board assembly site may have different recommendations for stencil design.

GENERIC PACKAGE VIEW

FK 20

LCCC - 2.03 mm max height

8.89 x 8.89, 1.27 mm pitch

LEADLESS CERAMIC CHIP CARRIER

This image is a representation of the package family, actual package may vary.
Refer to the product data sheet for package details.

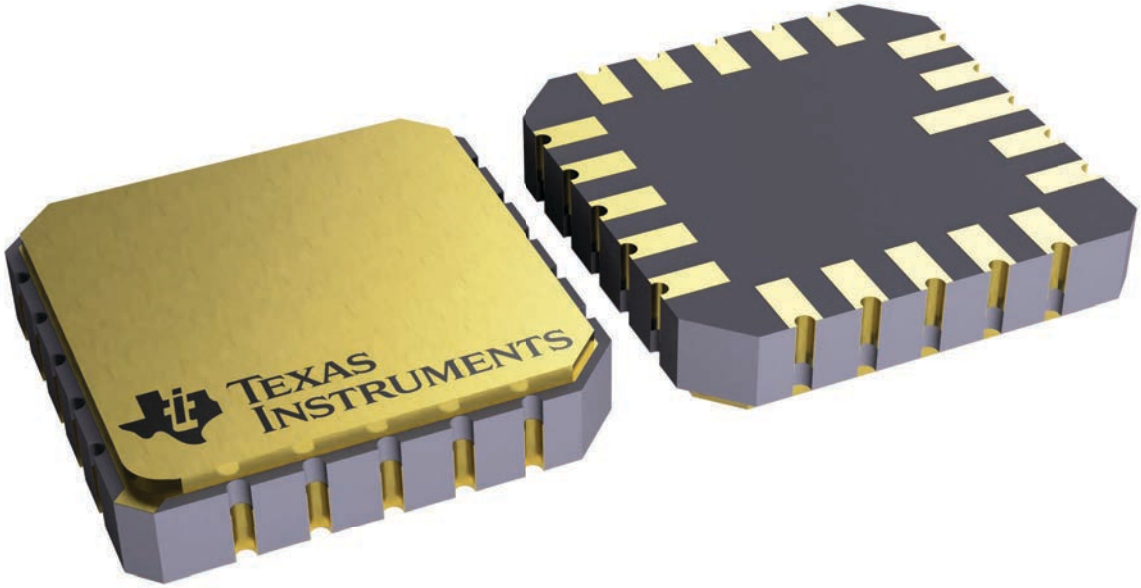

4229370VA\

J 14 CDIP - 5.08 mm max height

CERAMIC DUAL IN LINE PACKAGE

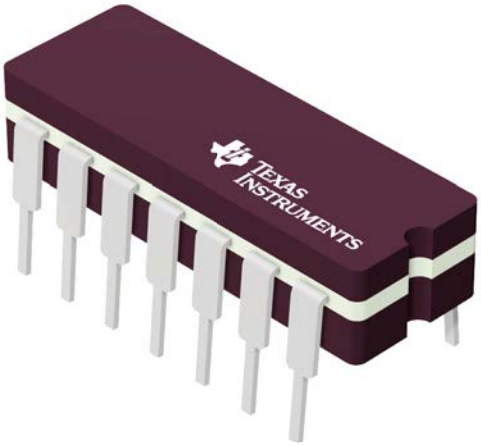

Images above are just a representation of the package family, actual package may vary.
Refer to the product data sheet for package details.

4040083-5/G

PACKAGE OUTLINE

J0014A

CDIP - 5.08 mm max height

CERAMIC DUAL IN LINE PACKAGE

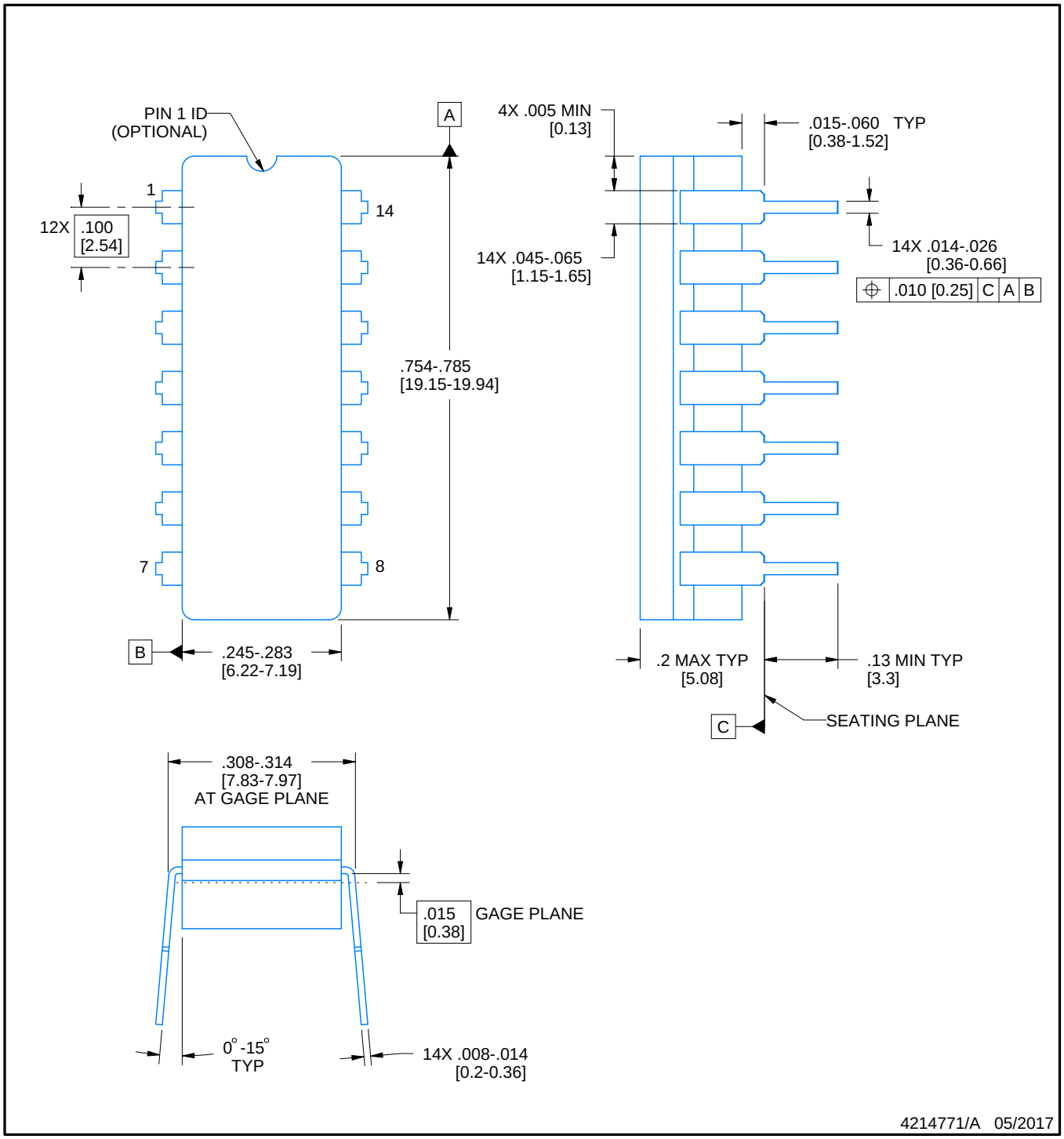

NOTES:

1. All controlling linear dimensions are in inches. Dimensions in brackets are in millimeters. Any dimension in brackets or parenthesis are for reference only. Dimensioning and tolerancing per ASME Y14.5M.
2. This drawing is subject to change without notice.
3. This package is hermitically sealed with a ceramic lid using glass frit.
4. Index point is provided on cap for terminal identification only and on press ceramic glass frit seal only.
5. Falls within MIL-STD-1835 and GDIP1-T14.

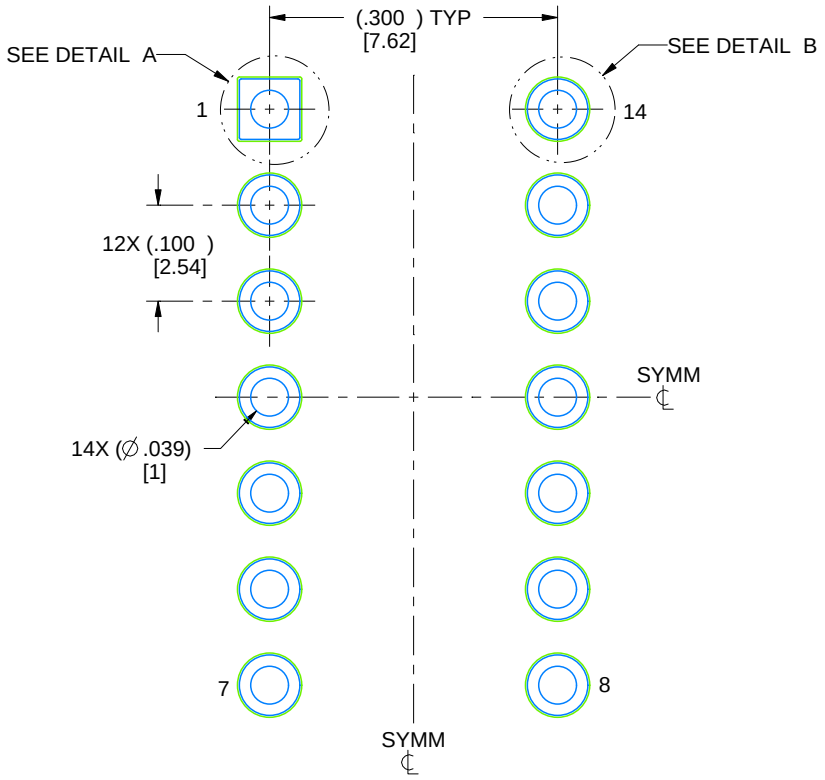

LAND PATTERN EXAMPLE
NON-SOLDER MASK DEFINED
SCALE: 5X

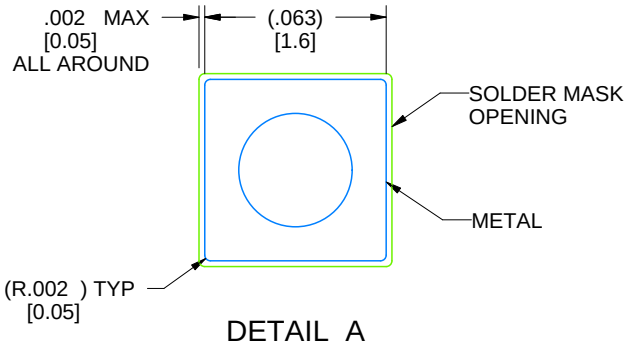

DETAIL A
SCALE: 15X

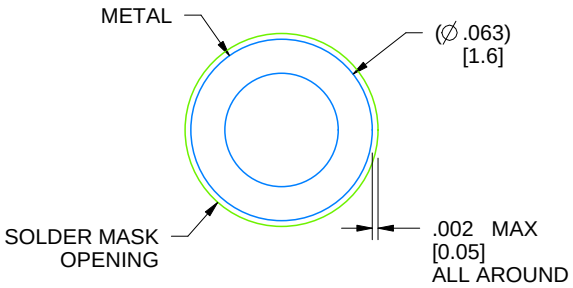

DETAIL B
13X, SCALE: 15X

4214771/A 05/2017

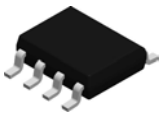

PACKAGE OUTLINE

D0008A

SOIC - 1.75 mm max height

SMALL OUTLINE INTEGRATED CIRCUIT

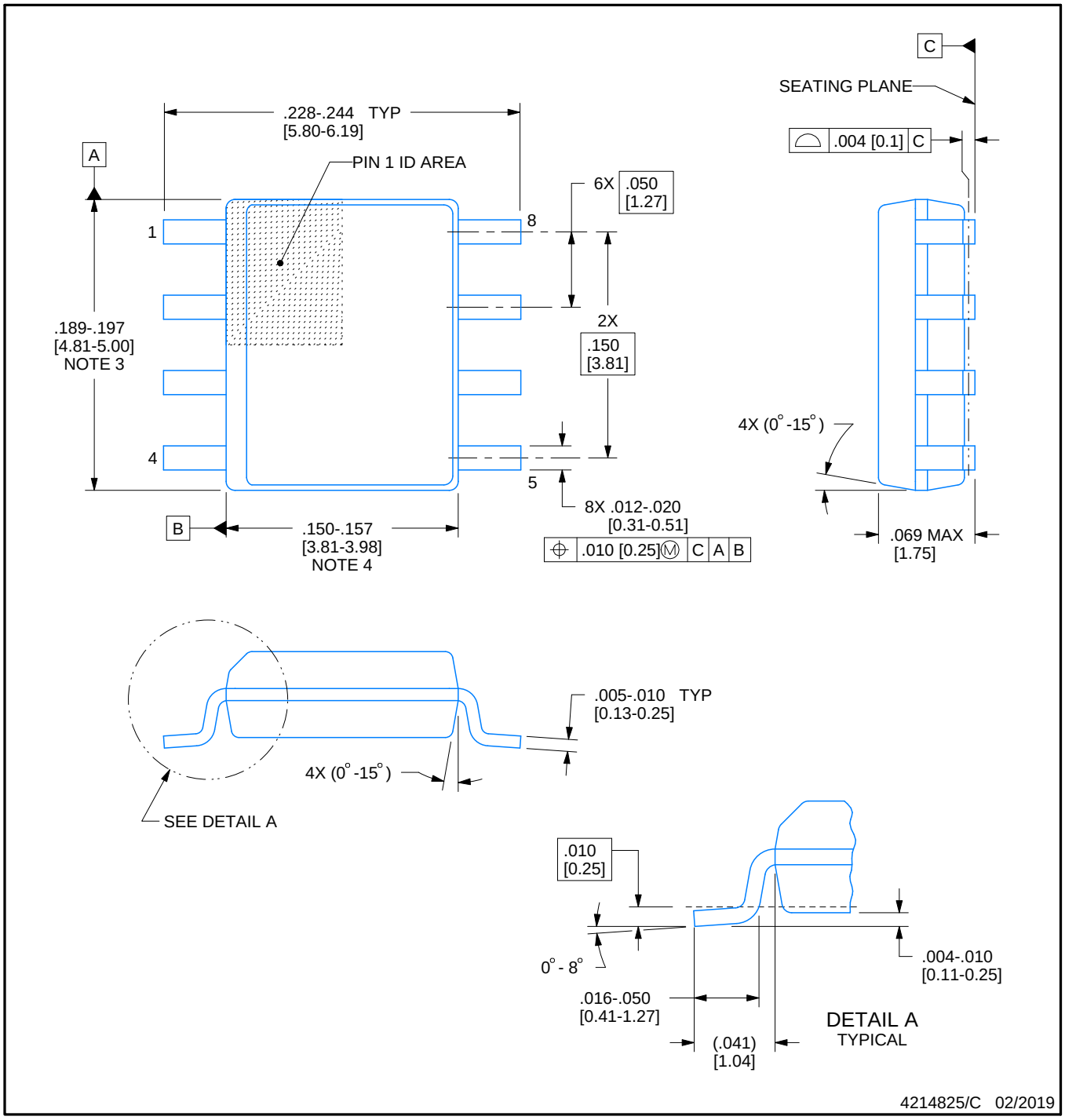

NOTES:

1. Linear dimensions are in inches [millimeters]. Dimensions in parenthesis are for reference only. Controlling dimensions are in inches. Dimensioning and tolerancing per ASME Y14.5M.
2. This drawing is subject to change without notice.
3. This dimension does not include mold flash, protrusions, or gate burrs. Mold flash, protrusions, or gate burrs shall not exceed .006 [0.15] per side.
4. This dimension does not include interlead flash.
5. Reference JEDEC registration MS-012, variation AA.

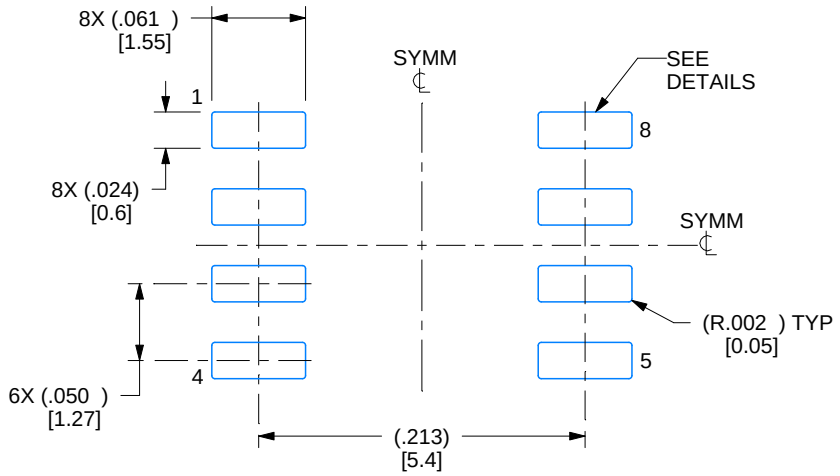

LAND PATTERN EXAMPLE
EXPOSED METAL SHOWN
SCALE:8X

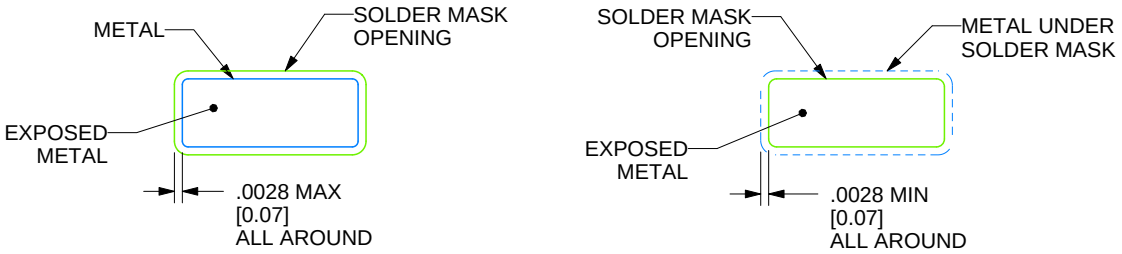

SOLDER MASK DETAILS

4214825/C 02/2019

NOTES: (continued)

6. Publication IPC-7351 may have alternate designs.
7. Solder mask tolerances between and around signal pads can vary based on board fabrication site.

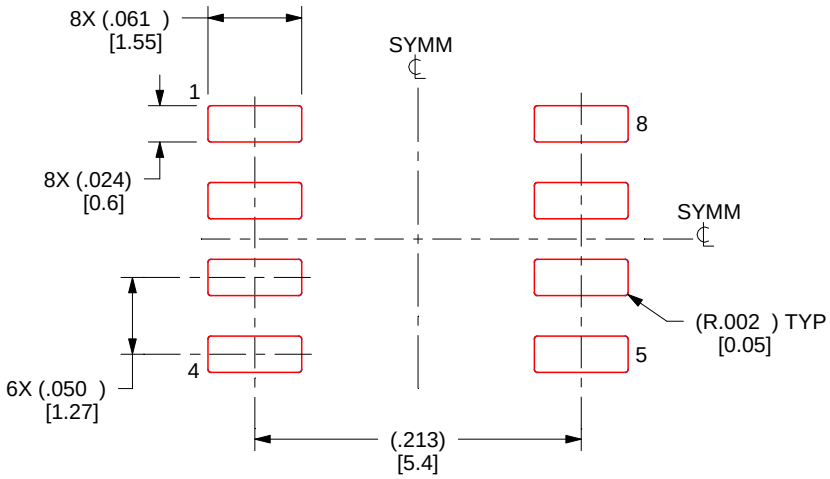

SOLDER PASTE EXAMPLE
BASED ON .005 INCH [0.125 MM] THICK STENCIL
SCALE:8X

4214825/C 02/2019

NOTES: (continued)

8. Laser cutting apertures with trapezoidal walls and rounded corners may offer better paste release. IPC-7525 may have alternate design recommendations.
9. Board assembly site may have different recommendations for stencil design.

P (R–PDIP–T8) PLASTIC DUAL–IN–LINE PACKAGE

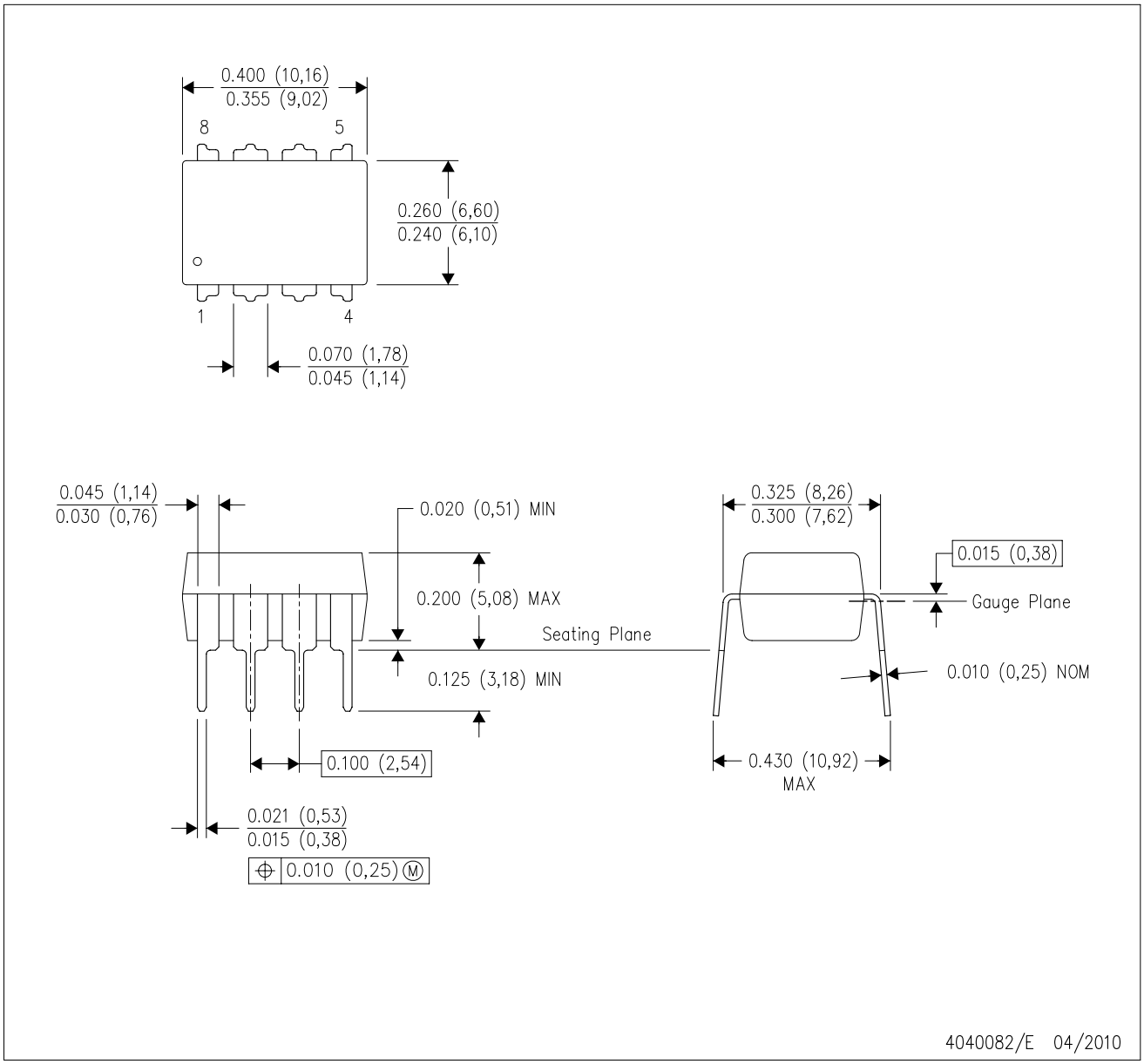

NOTES:
A. All linear dimensions are in inches (millimeters).
B. This drawing is subject to change without notice.
C. Falls within JEDEC MS–001 variation BA.

N (R–PDIP–T**) PLASTIC DUAL–IN–LINE PACKAGE

16 PINS SHOWN

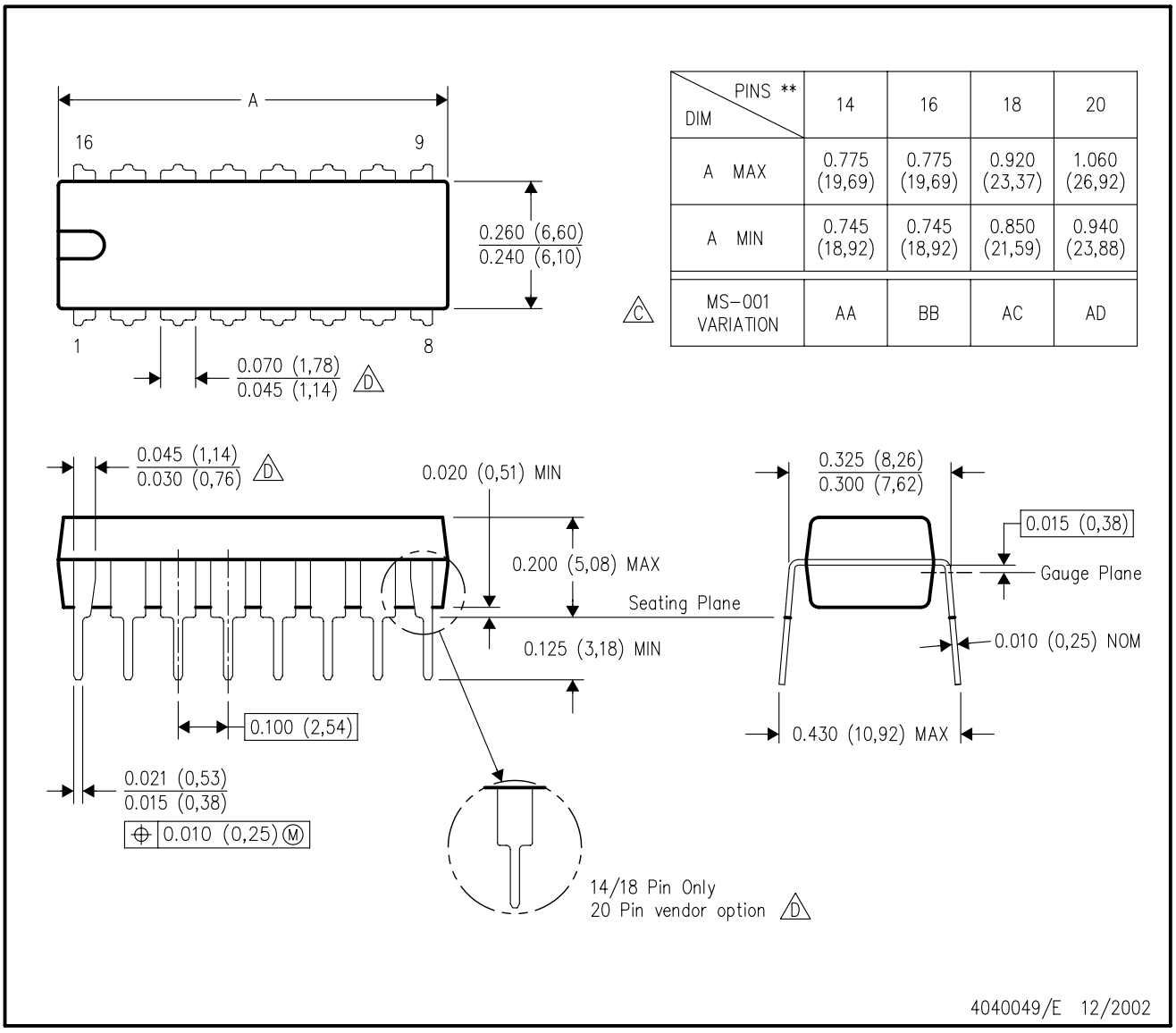

DIM \ PINS **	14	16	18	20
A MAX	0.775 (19,69)	0.775 (19,69)	0.920 (23,37)	1.060 (26,92)
A MIN	0.745 (18,92)	0.745 (18,92)	0.850 (21,59)	0.940 (23,88)
MS–001 VARIATION (C)	AA	BB	AC	AD

NOTES:
A. All linear dimensions are in inches (millimeters).
B. This drawing is subject to change without notice.
C. Falls within JEDEC MS–001, except 18 and 20 pin minimum body length (Dim A).
D. The 20 pin end lead shoulder width is a vendor option, either half or full width.

JG0008A

CDIP - 5.08 mm max height

CERAMIC DUAL IN-LINE PACKAGE

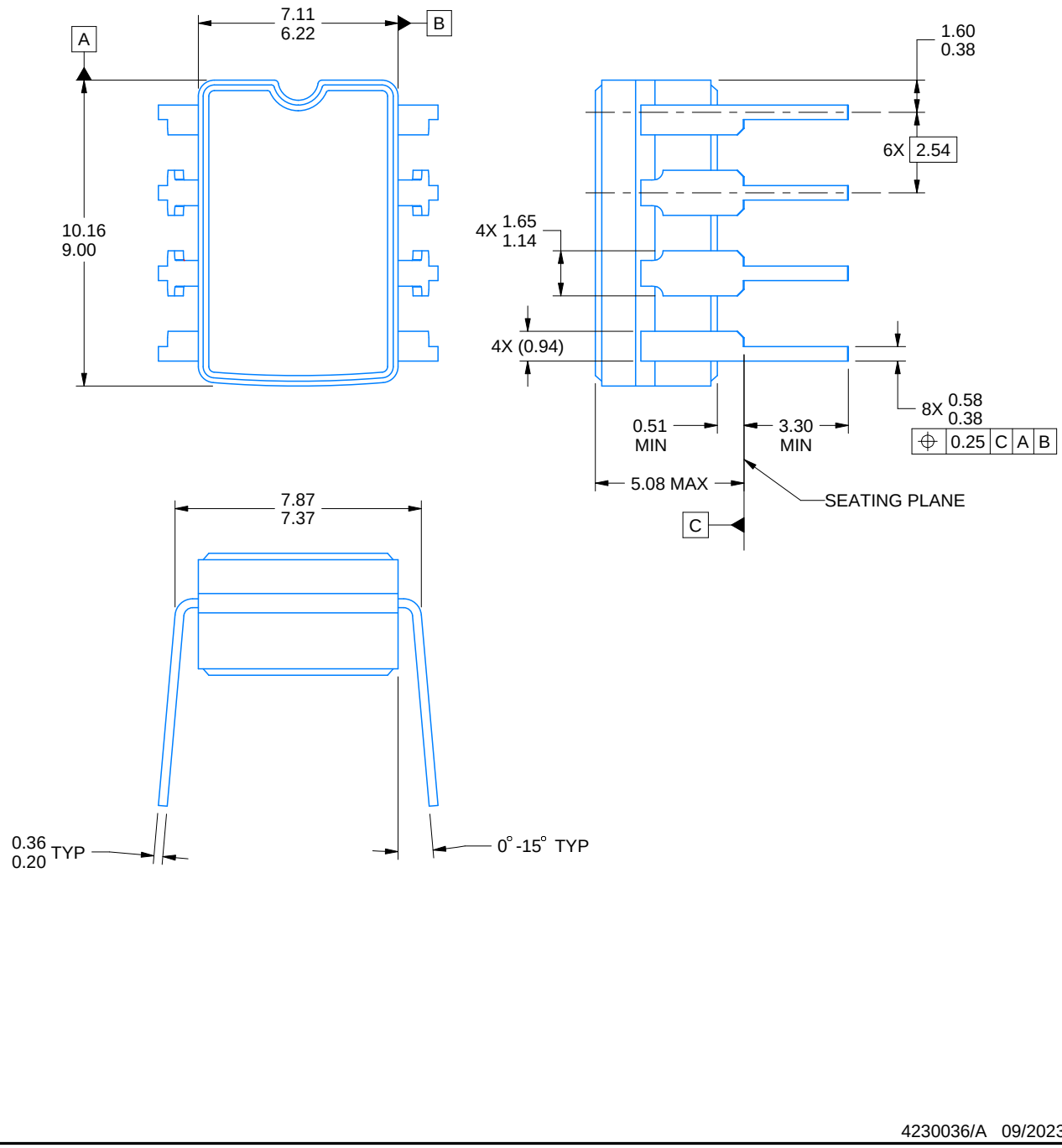

4230036/A 09/2023

NOTES:

1. All linear dimensions are in millimeters. Any dimensions in parenthesis are for reference only. Dimensioning and tolerancing per ASME Y14.5M.
2. This drawing is subject to change without notice.
3. This package can be hermetically sealed with a ceramic lid using glass frit.
4. Index point is provided on cap for terminal identification.
5. Falls within MIL STD 1835 GDIP1-T8

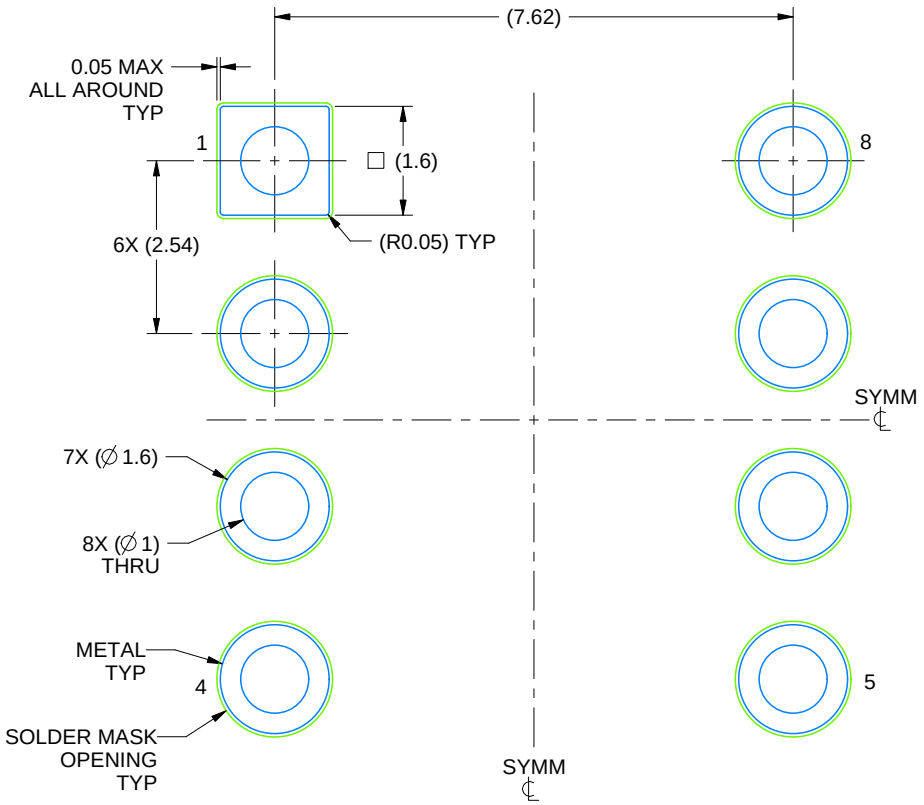

LAND PATTERN EXAMPLE
NON SOLDER MASK DEFINED
SCALE: 9X

4230036/A 09/2023

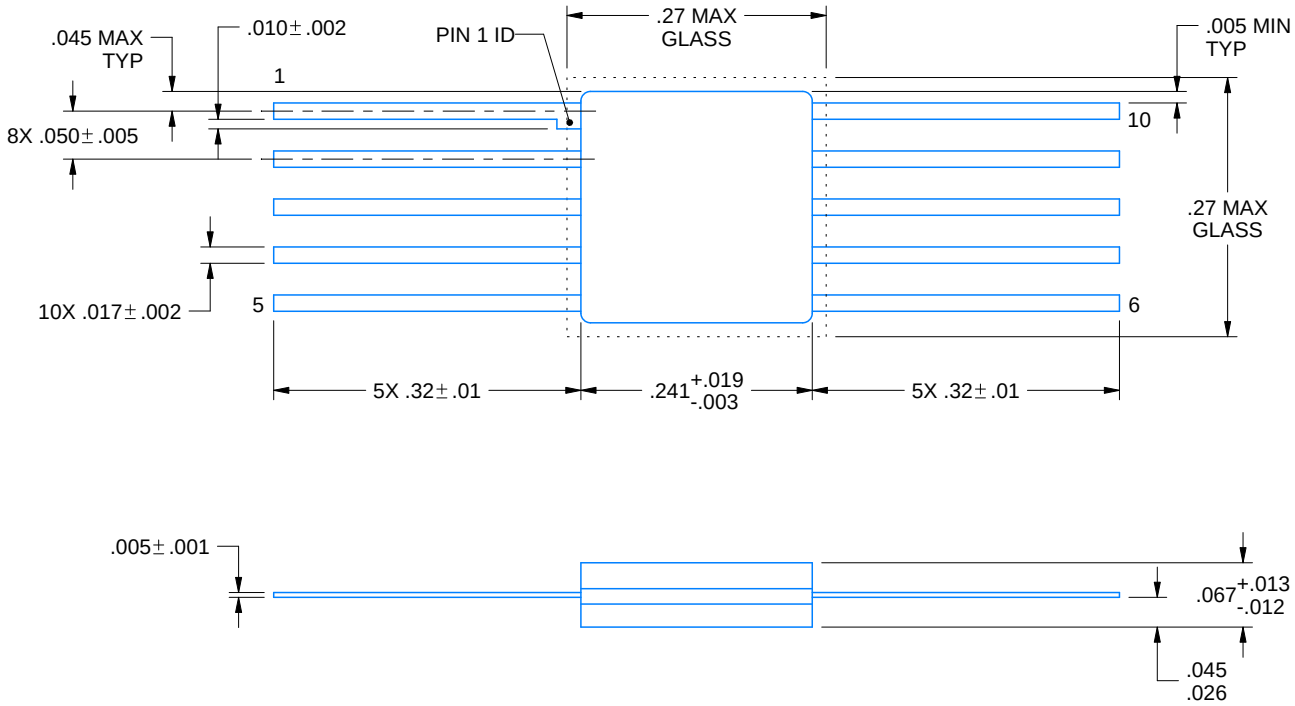

4225582/A 01/2020

NOTES:

1. All linear dimensions are in inches. Any dimensions in parenthesis are for reference only. Dimensioning and tolerancing per ASME Y14.5M.
2. This drawing is subject to change without notice.

IMPORTANT NOTICE AND DISCLAIMER

TI PROVIDES TECHNICAL AND RELIABILITY DATA (INCLUDING DATASHEETS), DESIGN RESOURCES (INCLUDING REFERENCE DESIGNS), APPLICATION OR OTHER DESIGN ADVICE, WEB TOOLS, SAFETY INFORMATION, AND OTHER RESOURCES “AS IS” AND WITH ALL FAULTS, AND DISCLAIMS ALL WARRANTIES, EXPRESS AND IMPLIED, INCLUDING WITHOUT LIMITATION ANY IMPLIED WARRANTIES OF MERCHANTABILITY, FITNESS FOR A PARTICULAR PURPOSE OR NON-INFRINGEMENT OF THIRD PARTY INTELLECTUAL PROPERTY RIGHTS.

These resources are intended for skilled developers designing with TI products. You are solely responsible for (1) selecting the appropriate TI products for your application, (2) designing, validating and testing your application, and (3) ensuring your application meets applicable standards, and any other safety, security, regulatory or other requirements.

These resources are subject to change without notice. TI grants you permission to use these resources only for development of an application that uses the TI products described in the resource. Other reproduction and display of these resources is prohibited. No license is granted to any other TI intellectual property right or to any third party intellectual property right. TI disclaims responsibility for, and you fully indemnify TI and its representatives against any claims, damages, costs, losses, and liabilities arising out of your use of these resources.

TI’s products are provided subject to TI’s Terms of Sale, TI’s General Quality Guidelines, or other applicable terms available either on ti.com or provided in conjunction with such TI products. TI’s provision of these resources does not expand or otherwise alter TI’s applicable warranties or warranty disclaimers for TI products. Unless TI explicitly designates a product as custom or customer-specified, TI products are standard, catalog, general purpose devices.

TI objects to and rejects any additional or different terms you may propose.

Copyright © 2026, Texas Instruments Incorporated

Last updated 10/2025