- **Maximum Throughput . . . 140/200 KSPS**
- **Built-In Conversion Clock**
- **INL/DNL: ±1 LSB Max, SINAD: 72 dB, SFDR: 85 dB, f_i = 20 kHz**
- **SPI/DSP-Compatible Serial Interface**
- **Single Supply: 2.7 Vdc to 5.5 Vdc**
- **Rail-to-Rail Analog Input With 500 kHz BW**
- **Three Options Available:**
  - **TLV2541: Single Channel Input**
  - **TLV2542: Dual Channels With Autosweep**
  - **TLV2545: Single Channel With Pseudo-Differential Input**
- **Low Power With Autopower Down**
  - **Operating Current: 1 mA at 2.7 V, 1.5 mA at 5 V**
    Autopower Down: 2 μA at 2.7 V, 5 μA at 5 V
- **Small 8-Pin MSOP and SOIC Packages**

TOP VIEW
TLV2541

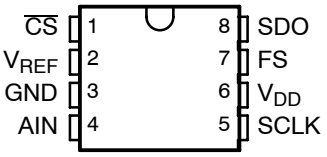

TOP VIEW
TLV2542

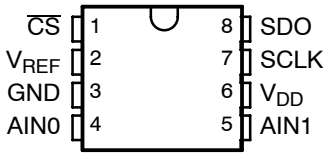

TOP VIEW
TLV2545

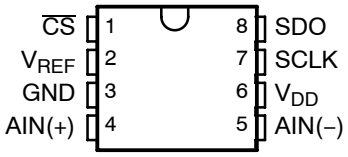

description

The TLV2541, TLV2542, and TLV2545 are a family of high performance, 12-bit, low power, miniature, CMOS analog-to-digital converters (ADC). The TLV254x family operates from a single 2.7-V to 5.5-V supply. Devices are available with single, dual, or single pseudo-differential inputs. Each device has a chip select ($\overline{CS}$), serial clock (SCLK), and serial data output (SDO) that provides a direct 3-wire interface to the serial port of most popular host microprocessors (SPI interface). When interfaced with a TMS320™ DSP, a frame sync signal (FS) can be used to indicate the start of a serial data frame on $\overline{CS}$ for all devices or FS for the TLV2541.

TLV2541, TLV2542, and TLV2545 are designed to operate with very low power consumption. The power saving feature is further enhanced with an autopower-down mode. This product family features a high-speed serial link to modern host processors with SCLK up to 20 MHz. The maximum SCLK frequency is dependent upon the mode of operation (see Table 1). The TLV254x family uses the built-in oscillator as the conversion clock, providing a 3.5-μs conversion time.

AVAILABLE OPTIONS

T_A	PACKAGED DEVICES	
	8-MSOP (DGK)	8-SOIC (D)
0°C to 70°C	TLV2541CDGK (AGZ)	
	TLV2542CDGK (AHB)	
	TLV2545CDGK (AHD)	
–40°C to 85°C	TLV2541IDGK (AHA)	TLV2541ID
	TLV2542IDGK (AHC)	TLV2542ID
	TLV2545IDGK (AHE)	TLV2545ID

Please be aware that an important notice concerning availability, standard warranty, and use in critical applications of Texas Instruments semiconductor products and disclaimers thereto appears at the end of this data sheet.

TMS320 is a trademark of Texas Instruments.

PRODUCTION DATA information is current as of publication date. Products conform to specifications per the terms of Texas Instruments standard warranty. Production processing does not necessarily include testing of all parameters.

Copyright © 2000 – 2003, Texas Instruments Incorporated

functional block diagram

TLV2541

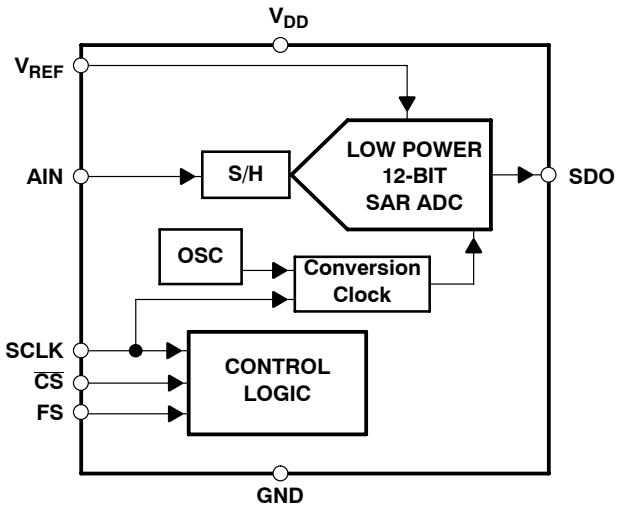

TLV2542

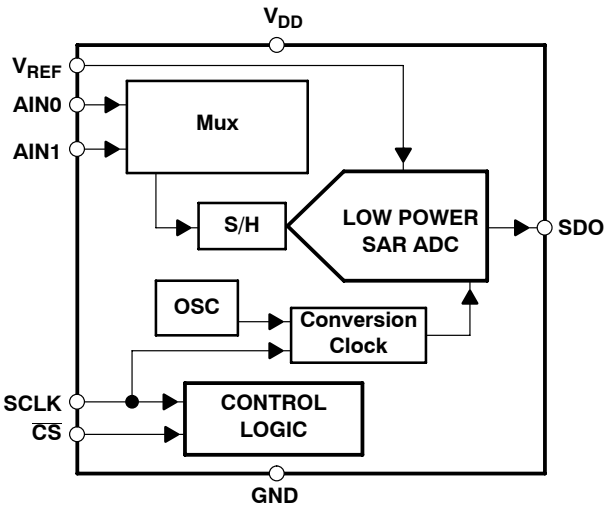

TLV2545

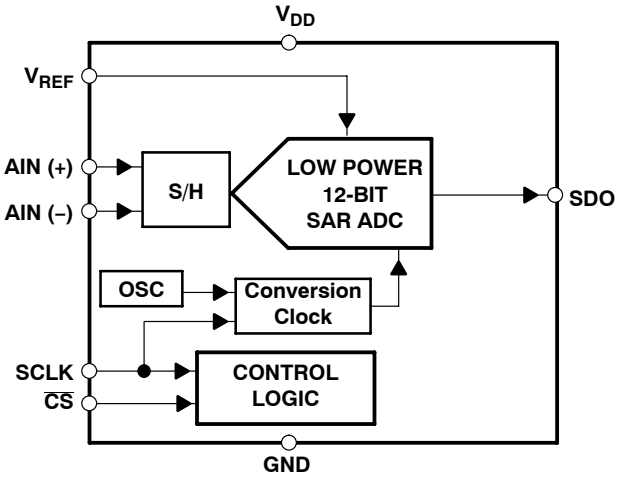

TEXAS INSTRUMENTS
POST OFFICE BOX 655303 • DALLAS, TEXAS 75265
POST OFFICE BOX 1443 • HOUSTON, TEXAS 77251–1443

Terminal Functions

TLV2541

TERMINAL		I/O	DESCRIPTION
NAME	NO.		
AIN	4	I	Analog input channel
$\overline{CS}$	1	I	Chip select. A high-to-low transition on the $\overline{CS}$ input removes SDO from 3-state within a maximum setup time. $\overline{CS}$ can be used as the FS pin when a dedicated DSP serial port is used.
FS	7	I	DSP frame sync input. Indication of the start of a serial data frame. Tie this terminal to V_{DD} if not used.
GND	3	I	Ground return for the internal circuitry. Unless otherwise noted, all voltage measurements are with respect to GND.
SCLK	5	I	Output serial clock. This terminal receives the serial SCLK from the host processor.
SDO	8	O	The 3-state serial output for the A/D conversion result. SDO is kept in the high-impedance state until $\overline{CS}$ falling edge or FS rising edge, whichever occurs first. The output format is MSB first. When FS is not used (FS = 1 at the falling edge of $\overline{CS}$): The MSB is presented to the SDO pin after $\overline{CS}$ falling edge and output data is valid on the first falling edge of SCLK. When $\overline{CS}$ and FS are both used (FS = 0 at the falling edge of $\overline{CS}$): The MSB is presented to the SDO pin after the falling edge of $\overline{CS}$. When $\overline{CS}$ is tied/held low, the MSB is presented on SDO after the rising FS. Output data is valid on the first falling edge of SCLK. (This is typically used with an active FS from a DSP using a dedicated serial port.)
V_{DD}	6	I	Positive supply voltage
V_{REF}	2	I	External reference input

TLV2542/45

TERMINAL		I/O	DESCRIPTION
NAME	NO.		
AIN0 /AIN(+)	4	I	Analog input channel 0 for TLV2542—Positive input for TLV2545.
AIN1/AIN (–)	5	I	Analog input channel 1 for TLV2542—Inverted input for TLV2545.
$\overline{CS}$	1	I	Chip select. A high-to-low transition on $\overline{CS}$ removes SDO from 3-state within a maximum delay time. This pin can be connected to the frame sync of a DSP using a dedicated serial port.
GND	3	I	Ground return for the internal circuitry. Unless otherwise noted, all voltage measurements are with respect to GND.
SCLK	7	I	Output serial clock. This terminal receives the serial SCLK from the host processor.
SDO	8	O	The 3-state serial output for the A/D conversion result. SDO is kept in the high-impedance state when $\overline{CS}$ is high and presents output data after the $\overline{CS}$ falling edge until the LSB is presented. The output format is MSB first. SDO returns to the Hi-Z state after the 16th SCLK. Output data is valid on the falling SCLK edge.
V_{DD}	6	I	Positive supply voltage
V_{REF}	2	I	External reference input

detailed description

The TLV2541, TLV2542, and TLV2545 are successive approximation (SAR) ADCs utilizing a charge redistribution DAC. Figure 1 shows a simplified version of the ADC.

The sampling capacitor acquires the signal on AIN during the sampling period. When the conversion process starts, the SAR control logic and charge redistribution DAC are used to add and subtract fixed amounts of charge from the sampling capacitor to bring the comparator into a balanced condition. When the comparator is balanced, the conversion is complete and the ADC output code is generated.

detailed description (continued)

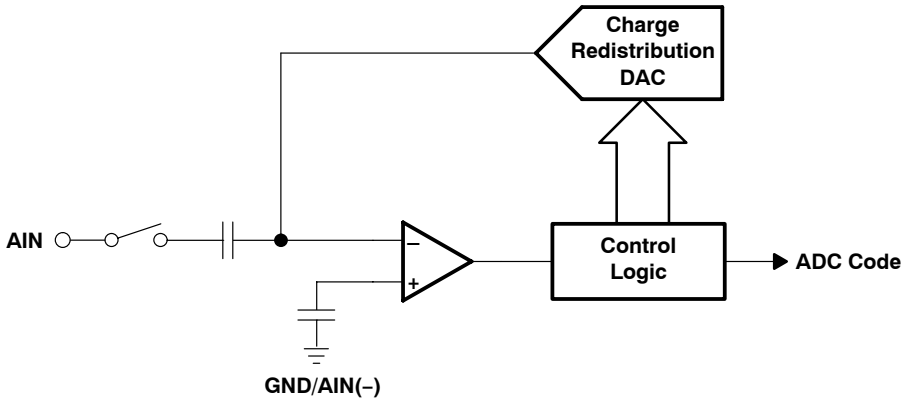

Figure 1. Simplified SAR Circuit

serial interface

OUTPUT DATA FORMAT	
MSB	**LSB**
D15–D4	D3–D0
Conversion result (OD11–OD0)	Don't care

The output data format is binary (unipolar straight binary).

binary

Zero-scale code = 000h, Vcode = GND
Full-scale code = FFFh, Vcode = V_{REF} – 1 LSB

pseudo-differential inputs

The TLV2545 operates in pseudo-differential mode. The inverted input is available on pin 5. It can have a maximum input ripple of ±0.2 V. This is normally used for ground noise rejection.

control and timing

start of the cycle

Each cycle may be started by either $\overline{CS}$, FS, or a combination of both. The internal state machine requires one SCLK high-to-low transition to determine the state of these control signals so internal blocks can be powered up in an active cycle. Special care to SPI mode is necessary. Make sure there is at least one SCLK whenever $\overline{CS}$ (pin 1) is high to ensure proper operation.

TLV2541

- Control via $\overline{CS}$ (FS = 1 at the falling edge of $\overline{CS}$)—The falling edge of $\overline{CS}$ is the start of the cycle. The MSB should be read on the first falling SCLK edge after $\overline{CS}$ is low. Output data changes on the rising edge of SCLK. This is typically used for a microcontroller with an SPI interface, although it can also be used for a DSP. The microcontroller SPI interface should be programmed for CPOL = 0 (serial clock referenced to ground) and CPHA = 1 (data is valid on the falling edge of the serial clock). At least one falling edge transition on SCLK is needed whenever $\overline{CS}$ is brought high.
- Control via FS ($\overline{CS}$ is tied/held low)—The MSB is presented after the rising edge of FS. The falling edge of FS is the start of the cycle. The MSB should be read on the first falling edge of SCLK after FS is low. This is the typical configuration when the ADC is the only device on the DSP serial port.

control and timing (continued)

- Control via both $\overline{CS}$ and FS—The MSB is presented after the falling edge of $\overline{CS}$. The falling edge of FS is the start of the sampling cycle. The MSB should be read on the first falling SCLK edge after FS is low. Output data changes on the rising edge of SCLK. This configuration is typically used for multiple devices connected to a TMS320 DSP.

TLV2542/5

All control is provided using $\overline{CS}$ (pin 1) on the TLV2542 and TLV2545. The cycle is started on the falling edge transition provided by either a $\overline{CS}$ signal from an SPI microcontroller or FS signal from a TMS320 DSP. Timing is similar to the TLV2541, with control via $\overline{CS}$ only.

TLV2542 channel MUX reset cycle

The TLV2542 uses $\overline{CS}$ to reset the analog input multiplexer. A short active $\overline{CS}$ cycle (4 to 7 SCLKs) resets the MUX to AIN0. When the $\overline{CS}$ cycle time is greater than 7 SCLKs in duration, as in the case for a complete conversion cycle ($\overline{CS}$ is low for 16 SCLKs plus maximum conversion time), the MUX toggles to the next channel (see Figure 4 for timing). One dummy conversion cycle is recommended after power up before attempting to reset the MUX.

sampling

The converter sample time is 12 SCLKs in duration, beginning on the fifth SCLK received after the converter has received a high-to-low $\overline{CS}$ transition (or a high-to-low FS transition for the TLV2541).

conversion

The TLV2541, TLV2542, and TLV2545 complete conversions in the following manner. The conversion is started after the 16th SCLK falling edge and takes 3.5 μs to complete. Enough time (for conversion) should be allowed before a rising $\overline{CS}$ or FS edge so that no conversion is terminated prematurely.

TLV2542 input channel selection is toggled on each rising $\overline{CS}$ edge. The MUX channel can be reset to AIN0 via $\overline{CS}$ as described in the earlier section and in Figure 4. The input is sampled for 12 SCLKs, converted, and the result is presented on SDO during the next cycle. Care should also be taken to allow enough time between samples to avoid prematurely terminating the cycle, which occurs on a rising $\overline{CS}$ transition if the conversion is not complete.

The SDO data presented during a cycle is the result of the conversion of the sample taken during the previous cycle.

timing diagrams/conversion cycles

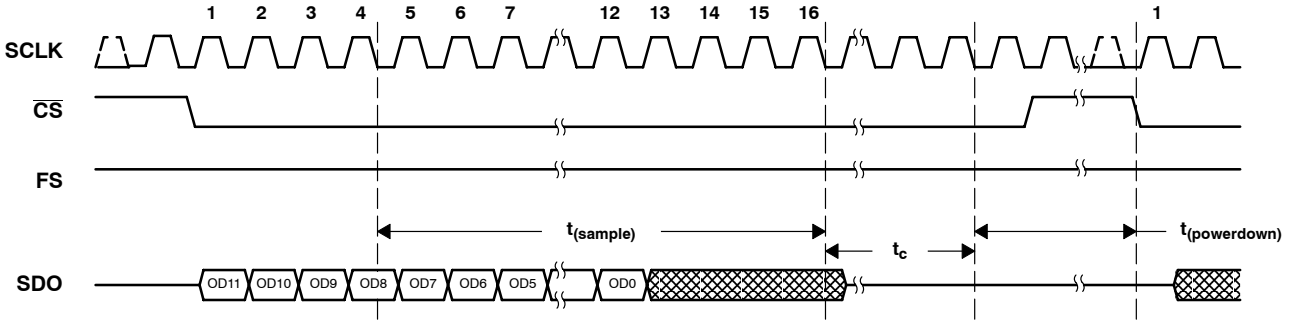

Figure 2. TLV2541 Timing: Control via $\overline{CS}$ (FS = 1)

timing diagrams/conversion cycles (continued)

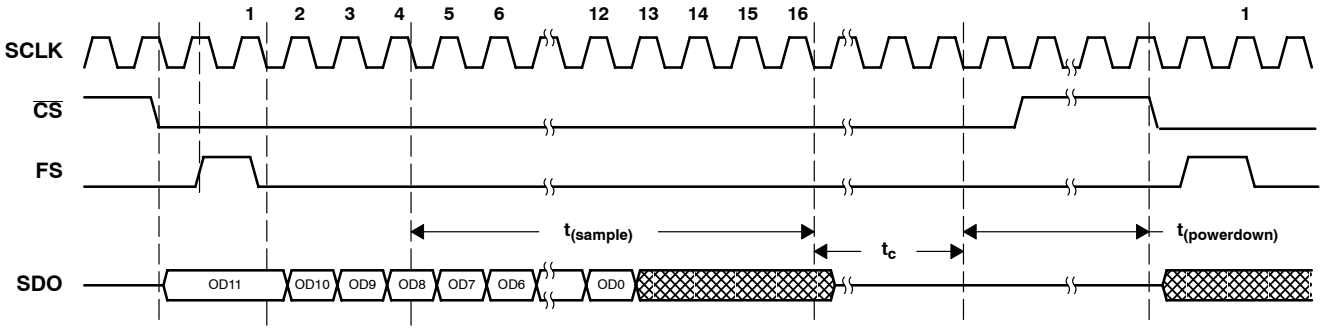

Figure 3. TLV2541 Timing: Control via $\overline{CS}$ and FS or FS Only

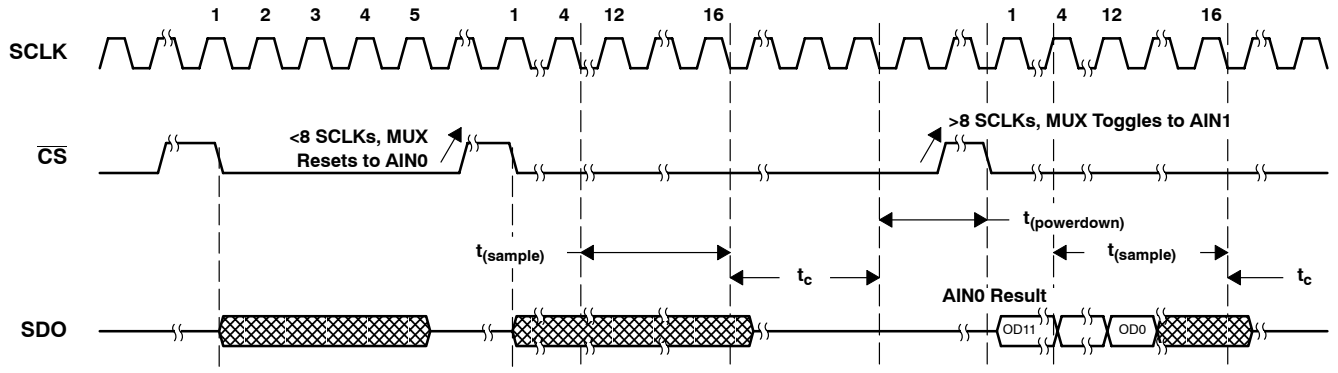

Figure 4. TLV2542 Reset Timing

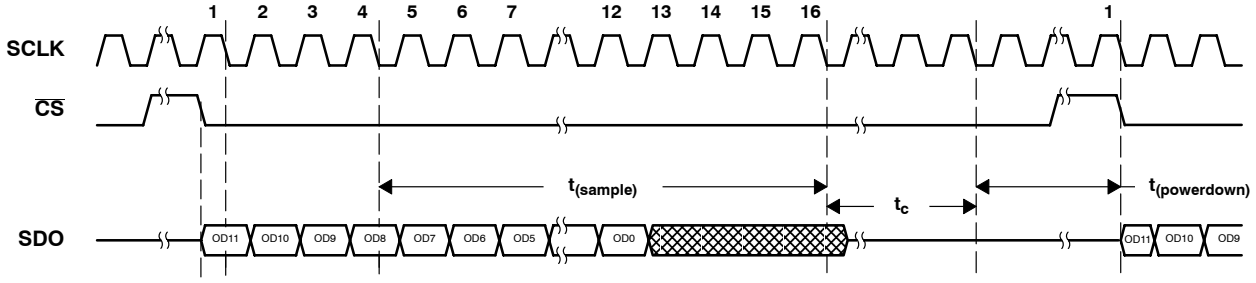

Figure 5. TLV2542 and TLV2545 Timing

using $\overline{CS}$ as the FS input

When interfacing the TLV2541 with the TMS320 DSP, the FSR signal from the DSP may be connected to the $\overline{CS}$ input if this is the only device on the serial port. This saves one output terminal from the DSP. (Output data changes on the falling edge of SCLK. This is the default configuration for the TLV2542 and TLV2545.)

using $\overline{CS}$ as the FS input (continued)

SCLK and conversion speed

The input frequency of SCLK can range from 100 kHz to 20 MHz maximum. The ADC conversion uses a separate internal oscillator with a minimum frequency of 4 MHz. The conversion cycle takes 14 internal oscillator clocks to complete. This leads to a 3.5-μs conversion time. For a 20-MHz SCLK, the minimum total cycle time is given by: 16x(1/20M)+14x(1/4M)+one SCLK = 4.35 μs. An additional SCLK is added to account for the required $\overline{CS}$ and/or FS high time. These times specify the minimum cycle time for an active $\overline{CS}$ or FS signal. If violated, the conversion terminates, invalidating the next data output cycle. Table 1 gives the maximum SCLK frequency for a given supply voltage and operational mode.

control via pin 1 ($\overline{CS}$, SPI interface)

All devices are compatible with this mode operation. A falling $\overline{CS}$ initiates the cycle (for TLV2541, the FS input is tied to V_{DD}). $\overline{CS}$ remains low for the entire cycle time (sample+convert+one SCLK) and can then be released.

NOTE:

IMPORTANT: A single SCLK is required whenever $\overline{CS}$ is high.

control via pin 1 ($\overline{CS}$, DSP interface)

All devices are compatible with this mode of operation. The FS signal from a DSP is connected directly to the $\overline{CS}$ input of the ADC. A falling edge on the $\overline{CS}$ input initiates the cycle. (For the TLV2541, the FS input can be tied to V_{DD}, although better performance can be achieved when using the FS input for control. Refer to the next section.) The $\overline{CS}$ input should remain low for the entire cycle time (sample+convert+one SCLK) and can then be released.

NOTE:

IMPORTANT: A single SCLK is required whenever $\overline{CS}$ is high. This should be of little consequence, since SCLK is normally always present when interfacing with a DSP.

control via pin 1 and pin 7 ($\overline{CS}$ and FS or FS only, DSP interface)

Only the TLV2541 is compatible with this mode of operation. The $\overline{CS}$ input to the ADC can be controlled via a general-purpose I/O pin from the DSP. The FS signal from the DSP is connected directly to the FS input of the ADC. A falling edge on $\overline{CS}$, if used, releases the MSB on the SDO output. When $\overline{CS}$ is not used, the rising FS edge releases the MSB. The falling edge on the FS input while SCLK is high initiates the cycle. The $\overline{CS}$ and FS inputs should remain low for the entire cycle time (sample+convert+one SCLK) and can then be released.

reference voltage

An external reference is applied via V_{REF}. The voltage level applied to this pin establishes the upper limit of the analog inputs to produce a full-scale reading. The value of V_{REF} and the analog input should not exceed the positive supply or be less than GND, consistent with the specified absolute maximum ratings. The digital output is at full scale when the input signal is equal to or higher than V_{REF} and at zero when the input signal is equal to or lower than GND.

power down and power up

Autopower down is built into these devices in order to reduce power consumption. The actual power savings depends on the inactive time between cycles and the power supply (loading) decoupling/storage capacitors. *Power-down takes effect immediately after the conversion is complete*. This is fast enough to provide some power savings between cycles with longer than 1 SCLK inactive time. *The device power goes down to 5 μA within 0.5 μs.* To achieve the lowest power-down current *(deep powerdown)* of 1 μA requires 2-ms inactive time between cycles. The power-down state is initiated at the end of conversion. These devices wake up *immediately* at the next falling edge of $\overline{CS}$ or the rising edge of FS.

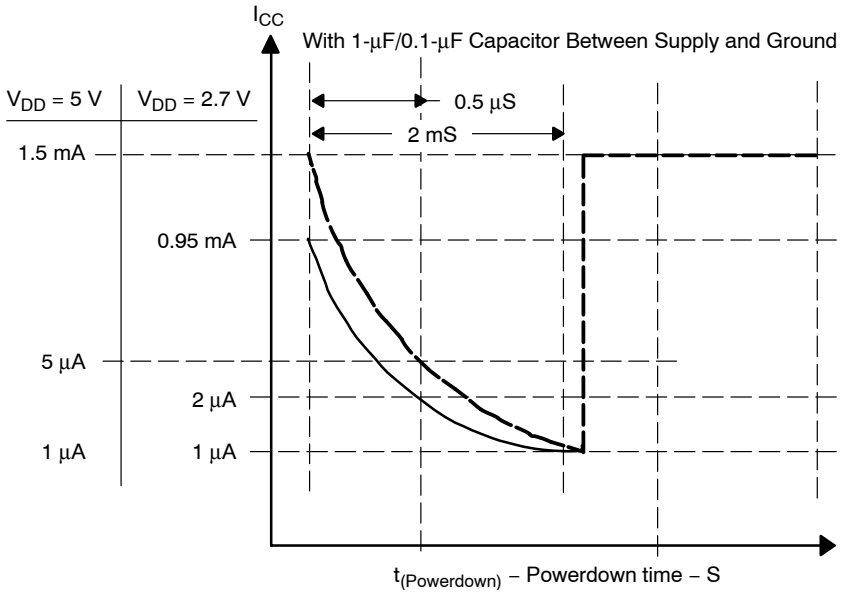

Table 1. Modes of Operation and Data Throughput

CONTROL PIN(s)/DEVICE	MAX SCLK (MHz) (50/50 duty cycle)		APPROXIMATE CONVERSION THROUGHPUT (ksps)	
	V_{DD} = 2.7 V	V_{DD} = 4.5 V	V_{DD} = 2.7 V	V_{DD} = 4.5 V
$\overline{CS}$ control only (TLV2541 only)				
For SPI interface†	10	15	175	200
For DSP interface (Use $\overline{CS}$ as FS)‡	5	8	140	175
$\overline{CS}$ and FS control (TLV2541 only)§				
DSP interface	15	20	200	200

† See Figure 29(a).
‡ See Figure 29(b).
§ See Figure 29(c).

absolute maximum ratings over operating free-air temperature (unless otherwise noted)¶

Supply voltage range, GND to V_{DD} . . . . . –0.3 V to 6.5 V
Analog input voltage range . . . . . –0.3 V to V_{DD} + 0.3 V
Reference input voltage . . . . . V_{DD} + 0.3 V
Digital input voltage range . . . . . –0.3 V to V_{DD}+ 0.3 V
Operating virtual junction temperature range, T_J . . . . . –40°C to 150°C
Operating free-air temperature range, T_A: C . . . . . 0°C to 70°C
I . . . . . –40°C to 85°C
Storage temperature range, T_{stg} . . . . . –65°C to 150°C
Lead temperature 1,6 mm (1/16 inch) from case for 10 seconds . . . . . 260°C

¶ Stresses beyond those listed under “absolute maximum ratings” may cause permanent damage to the device. These are stress ratings only, and functional operation of the device at these or any other conditions beyond those indicated under “recommended operating conditions” is not implied. Exposure to absolute-maximum-rated conditions for extended periods may affect device reliability.

recommended operating conditions

		MIN	NOM	MAX	UNIT
Supply voltage, V_{DD}		2.7	3.3	5.5	V
Positive external reference voltage input, V_{REFP} (see Note 1)		2		V_{DD}	V
Analog input voltage (see Note 1)		0		V_{DD}	V
High level control input voltage, V_{IH}		2.1			V
Low-level control input voltage, V_{IL}				0.6	V
Setup time, $\overline{CS}$ falling edge before first SCLK falling edge, $t_{su(CSL-SCLKL)}$	V_{DD} = REF = 4.5 V	40			ns
	V_{DD} = REF = 2.7 V	70			
Hold time, $\overline{CS}$ falling edge after SCLK falling edge, $t_{h(SCLKL-CSL)}$		5			ns
Delay time, delay from $\overline{CS}$ falling edge to FS rising edge, $t_{d(CSL-FSH)}$ (TLV2541 only)		0.5		7	SCLKs
Setup time, FS rising edge before SCLK falling edge, $t_{su(FSH-SCLKL)}$ (TLV2541 only)		0.35			SCLKs
Hold time, FS high after SCLK falling edge, $t_{h(SCLKL-FSL)}$ (TLV2541 only)				0.65	SCLKs
Pulse width $\overline{CS}$ high time, $t_{w(H_CS)}$		100			ns
Pulse width FS high time, $t_{w(H_FS)}$ (TLV2541 only)		0.75			SCLKs
SCLK cycle time, V_{DD} = 3.6 V to 2.7 V, $t_{c(SCLK)}$ (maximum tolerance of 40/60 duty cycle)		90		10000	ns
SCLK cycle time, V_{DD} = 5.5 V to 4.5 V, $t_{c(SCLK)}$ (maximum tolerance of 40/60 duty cycle)		50		10000	ns
Pulse width low time, $t_{w(L_SCLK)}$		0.4		0.6	SCLK
Pulse width high time, $t_{w(H_SCLK)}$		0.4		0.6	SCLK
Hold time, hold from end of conversion to $\overline{CS}$ high, $t_{h(EOC-CSH)}$ (EOC is internal, indicates end of conversion time, t_c)			0.05		µs
Active $\overline{CS}$ cycle time to reset internal MUX to AIN0, $t_{(reset\ cycle)}$ (TLV2542 only)		4		7	SCLKs
Delay time, delay from $\overline{CS}$ falling edge to SDO valid, $t_{d(CSL-SDOV)}$	V_{DD} = REF = 4.5 V, 25-pF load			40	ns
	V_{DD} = REF = 2.7 V, 25-pF load			70	
Delay time, delay from FS falling edge to SDO valid, $t_{d(FSL-SDOV)}$ (TLV2541 only)	V_{DD} = REF = 4.5 V, 25-pF load			1	ns
	V_{DD} = REF = 2.7 V, 25-pF load			1	
Delay time, delay from SCLK rising edge to SDO valid, $t_{d(SCLKH-SDOV)}$	V_{DD} = REF = 4.5 V, 25-pF load			11	ns
	V_{DD} = REF = 2.7 V, 25-pF load			21	
Delay time, delay from 17th SCLK rising edge to SDO 3-state, $t_{d(SCLK17H-SDOZ)}$	V_{DD} = REF = 4.5 V, 25-pF load			30	ns
	V_{DD} = REF = 2.7 V, 25-pF load			60	
Conversion time, t_c	Conversion clock = internal oscillator	2.1	2.6	3.5	µs
Sampling time, $t_{(sample)}$	See Note 2	300			ns
Operating free-air temperature, T_A	TLV2541/2/5C	0		70	°C
	TLV2541/2/5I	–40		85	

NOTES: 1. Analog input voltages greater than that applied to V_{REF} convert as all ones (111111111111), while input voltages less than that applied to GND convert as all zeros(000000000000).
2. Minimal $t_{(sample)}$ is given by $0.9 \times 50\ pF \times (R_S + 0.5\ k\Omega)$, where R_S is the source output impedance.

electrical characteristics over recommended operating free-air temperature range, $V_{DD} = V_{REF} = 2.7$ V to 5.5 V (unless otherwise noted)

PARAMETER		TEST CONDITIONS		MIN	TYP†	MAX	UNIT
V_{OH}	High-level output voltage	V_{DD} = 5.5 V, I_{OH} = –0.2 mA at 30-pF load		2.4			V
		V_{DD} = 2.7 V, I_{OH} = -20 μA at 30-pF load		V_{DD}–0.2			
V_{OL}	Low-level output voltage	V_{DD} = 5.5 V, I_{OL} = 0.8 mA at 30-pF load				0.4	V
		V_{DD} = 2.7 V, I_{OL} = 20 μA at 30-pF load				0.1	
I_{OZ}	Off-state output current (high-impedance-state)	$V_O = V_{DD}$	$\overline{CS} = V_{DD}$		1	2.5	μA
		V_O = 0			–1	–2.5	
I_{IH}	High-level input current	$V_I = V_{DD}$			0.005	2.5	μA
I_{IL}	Low-level input current	V_I = 0 V			–0.005	2.5	μA
I_{CC}	Operating supply current	$\overline{CS}$ at 0 V	V_{DD} = 4.5 V to 5.5 V		1.3	1.5	mA
			V_{DD} = 2.7 V to 3.3 V		0.85	0.95	
$I_{CC(AUTOPWDN)}$	Autopower-down current $t_{(powerdown)} \geq 0.5$ μs	For all digital inputs, 0≤ $V_I \leq$ 0.3 V or $V_I \geq V_{DD}$– 0.3 V, SCLK = 0, V_{DD} = 4.5 V to 5.5 V, Ext ref				5	μA
		V_{DD} = 2.7 V to 3.3 V, Ext ref				2	
	Deep autopower-down current $t_{(powerdown)} \geq 2$ ms	For all digital inputs, 0≤ $V_I \leq$ 0.3 V or $V_I \geq V_{DD}$– 0.3 V, SCLK = 0, V_{DD} = 4.5 V to 5.5 V, Ext ref				1	μA
		V_{DD} = 2.7 V to 3.3 V				1	
	Selected analog input channel leakage current	Selected channel at V_{DD}				1	μA
		Selected channel at 0 V				–1	
C_i	Input capacitance	Analog inputs		20	45	50	pF
		Control Inputs			5	25	
	Input on resistance	V_{DD} = 5.5 V				500	Ω
		V_{DD} = 2.7 V				600	
	Autopower down				0.5		SCLK

† All typical values are at V_{DD} = 5 V, T_A = 25°C.

TEXAS INSTRUMENTS
POST OFFICE BOX 655303 • DALLAS, TEXAS 75265
POST OFFICE BOX 1443 • HOUSTON, TEXAS 77251–1443

ac specifications (f_i = 20 kHz)

PARAMETER		TEST CONDITIONS	MIN	TYP	MAX	UNIT
SINAD	Signal-to-noise ratio +distortion	200 KSPS, $V_{DD} = V_{REF}$ = 5.5 V	70	72		dB
		150 KSPS, $V_{DD} = V_{REF}$ = 2.7 V	68	71		
THD	Total harmonic distortion	200 KSPS, $V_{DD} = V_{REF}$ = 5.5 V		–84	–80	dB
		150 KSPS, $V_{DD} = V_{REF}$ = 2.7 V		–84	–80	
ENOB	Effective number of bits	200 KSPS, $V_{DD} = V_{REF}$ = 5.5 V		11.8		Bits
		150 KSPS, $V_{DD} = V_{REF}$ = 2.7 V		11.6		
SFDR	Spurious free dynamic range	200 KSPS, $V_{DD} = V_{REF}$ = 5.5 V		–84	–80	dB
		150 KSPS, $V_{DD} = V_{REF}$ = 2.7 V		–84	–80	
Analog Input						
	Full-power bandwidth, –3 dB			1		MHz
	Full-power bandwidth, –1 dB			500		kHz

external reference specifications

PARAMETER		TEST CONDITIONS		MIN	TYP	MAX	UNIT
	Reference input voltage	V_{DD} = 2.7 V to 5.5 V		2		V_{DD}	V
	Reference input impedance	V_{DD} = 5.5 V	$\overline{CS}$ = 1, SCLK = 0	100			MΩ
			$\overline{CS}$ = 0, SCLK = 20 MHz	20	25		kΩ
		V_{DD} = 2.7 V	$\overline{CS}$ = 1, SCLK = 0	100			MΩ
			$\overline{CS}$ = 0, SCLK = 20 MHz	20	25		kΩ
	Reference current	$V_{DD} = V_{REF}$ = 5.5 V,	$\overline{CS}$ = 0, SCLK = 20 MHz		100	400	μA
		$V_{DD} = V_{REF}$ = 2.7 V,	$\overline{CS}$ = 0, SCLK = 20 MHz		50	200	
	Reference input capacitance	$V_{DD} = V_{REF}$ = 5.5 V	$\overline{CS}$ = 1, SCLK = 0	5		15	pF
			$\overline{CS}$ = 0, SCLK = 20 MHz	20	45	50	
		$V_{DD} = V_{REF}$ = 2.7 V	$\overline{CS}$ = 1, SCLK = 0	5		15	
			$\overline{CS}$ = 0, SCLK = 20 MHz	20	45	50	
V_{REF}	Reference voltage	V_{DD} = 2.7 V to 5.5 V				V_{DD}	V

dc specification, $V_{DD} = V_{REF}$ = 2.7 V to 5.5 V, SCLK frequency = 20 MHz at 5 V, 15 MHz at 3 V (unless otherwise noted)

PARAMETER		TEST CONDITIONS		MIN	TYP	MAX	UNIT
INL	Integral linearity error (see Note 4)				±0.6	±1	LSB
DNL	Differential linearity error	See Note 3			±0.5	±1	LSB
E_O	Offset error (see Note 5)	See Note 3	TLV2541/42			±1.5	LSB
			TLV2545			±2.5	
E_G	Gain error (see Note 5)	See Note 3	TLV2541/42			±2	LSB
			TLV2545			±5	
E_t	Total unadjusted error (see Note 6)	See Note 3	TLV2541/42			±2	LSB
			TLV2545			±5	

NOTES: 3. Analog input voltages greater than that applied to V_{REF} convert as all ones (111111111111).
4. Linear error is the maximum deviation from the best straight line through the A/D transfer characteristics.
5. Zero error is the difference between 000000000000 and the converted output for zero input voltage: full-scale error is the difference between 111111111111 and the converted output for full-scale input voltage.
6. Total unadjusted error comprises linearity, zero, and full-scale errors.

PARAMETER MEASUREMENT INFORMATION

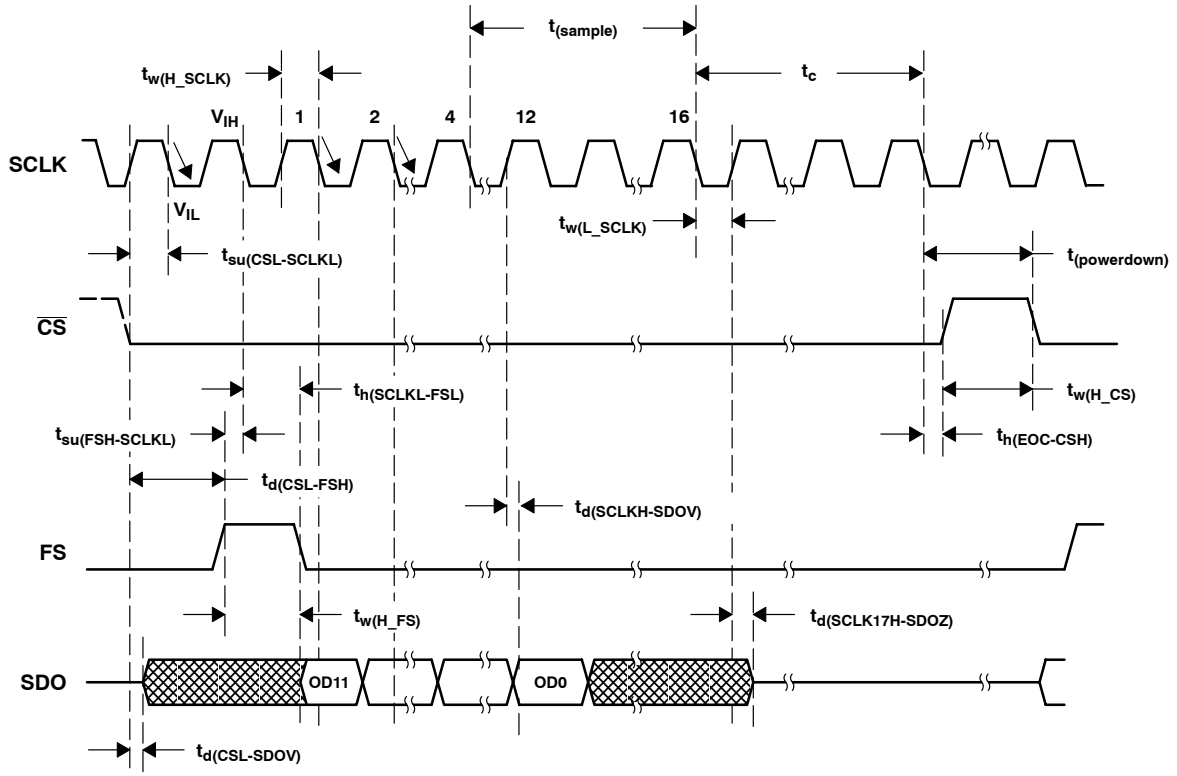

Figure 6. TLV2541 Critical Timing (Control via $\overline{CS}$ and FS or FS only)

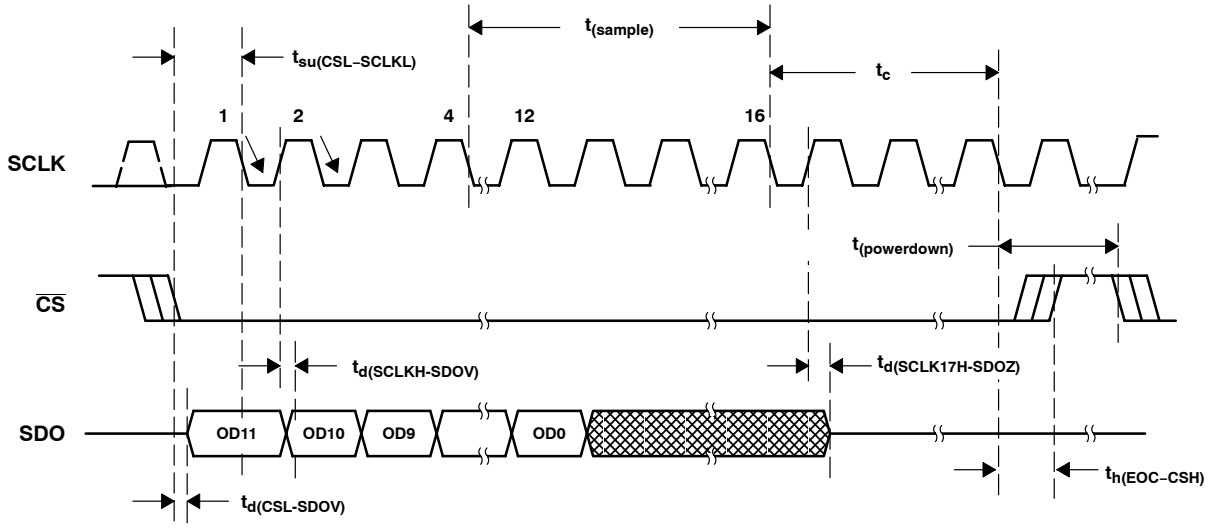

Figure 7. TLV2541 Critical Timing (Control via $\overline{CS}$ only, FS = 1)

TEXAS INSTRUMENTS
POST OFFICE BOX 655303 • DALLAS, TEXAS 75265
POST OFFICE BOX 1443 • HOUSTON, TEXAS 77251–1443

PARAMETER MEASUREMENT INFORMATION

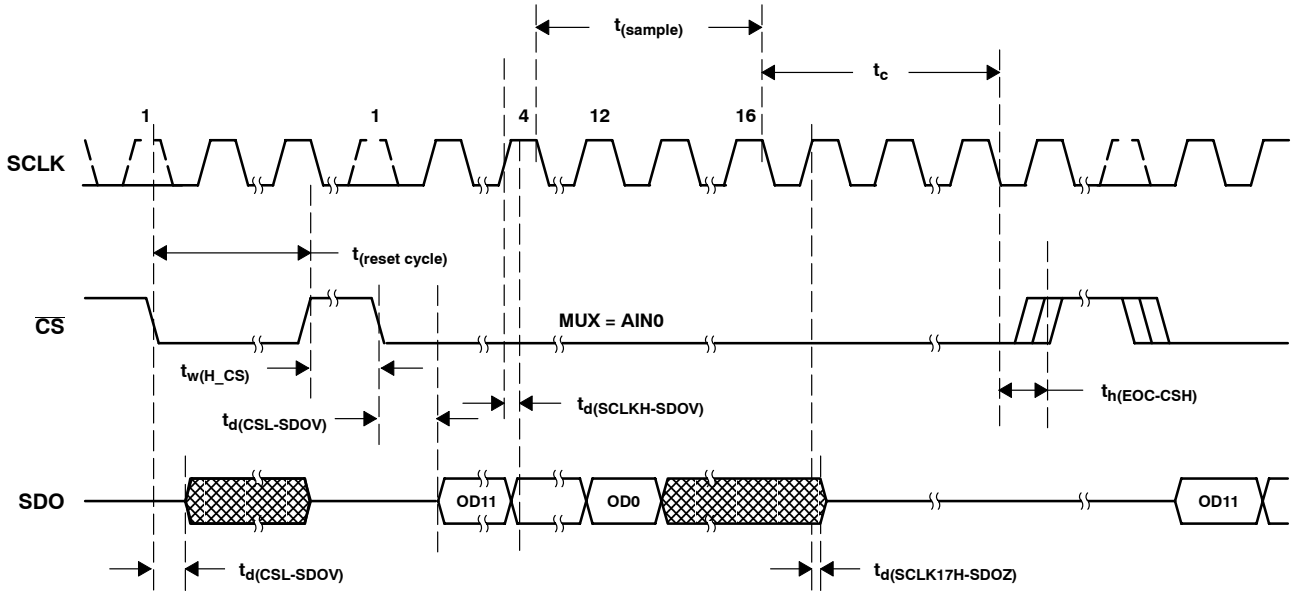

Figure 8. TLV2542 Reset Cycle Critical Timing

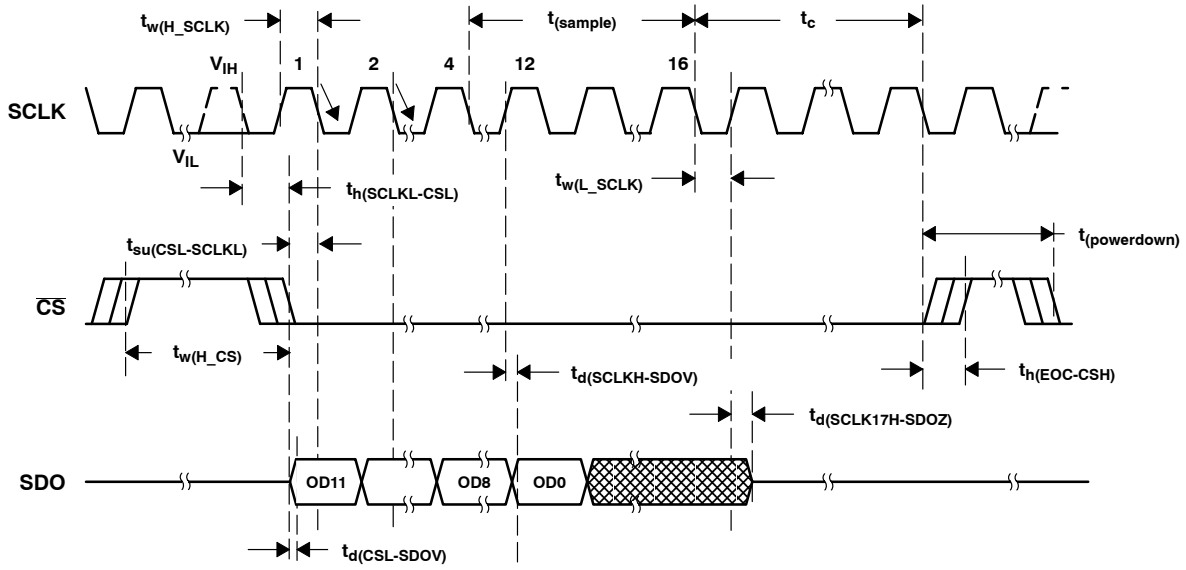

Figure 9. TLV2542 and TLV2545 Conversion Cycle Critical Timing

TYPICAL CHARACTERISTICS

INTEGRAL NONLINEARITY vs FREE-AIR TEMPERATURE

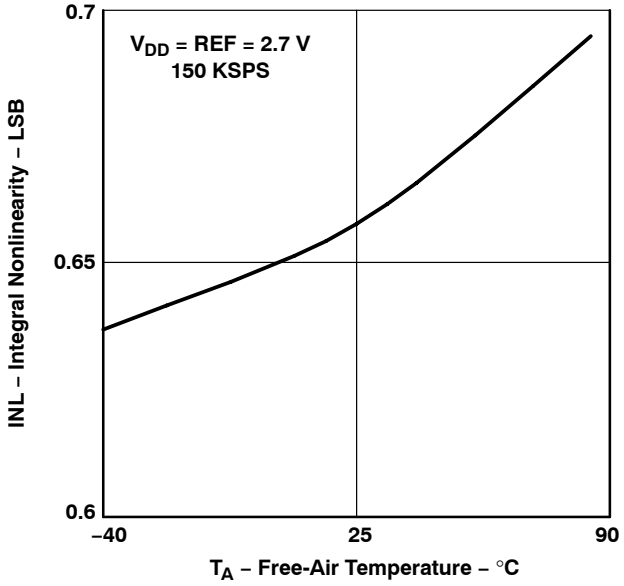

Figure 10

INTEGRAL NONLINEARITY vs FREE-AIR TEMPERATURE

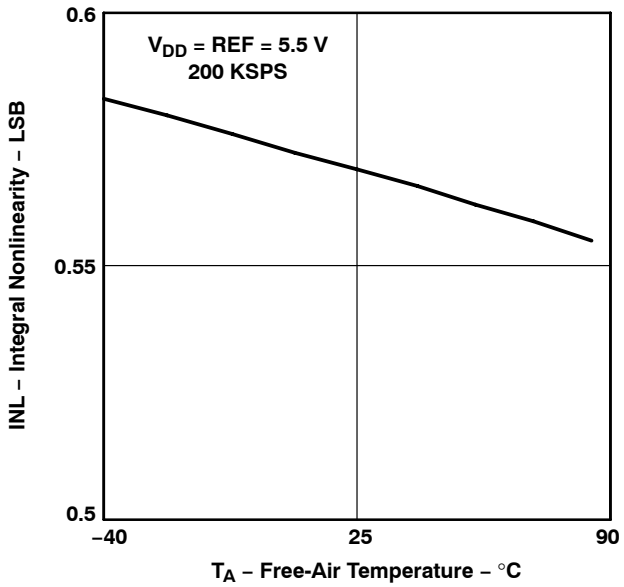

Figure 11

DIFFERENTIAL NONLINEARITY vs FREE-AIR TEMPERATURE

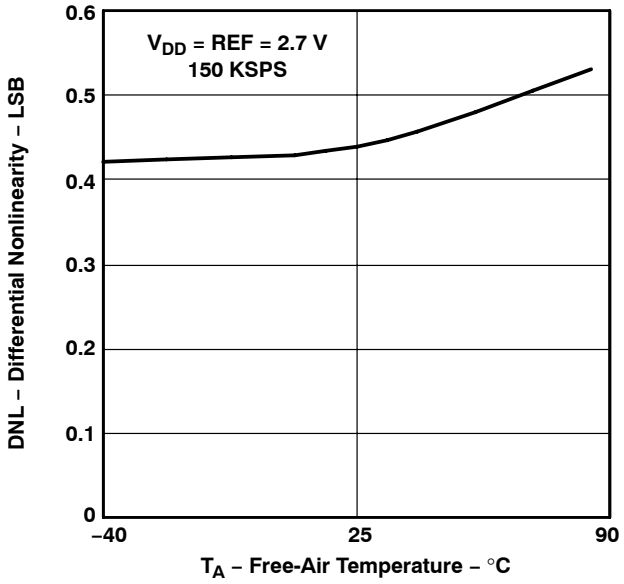

Figure 12

DIFFERENTIAL NONLINEARITY vs FREE-AIR TEMPERATURE

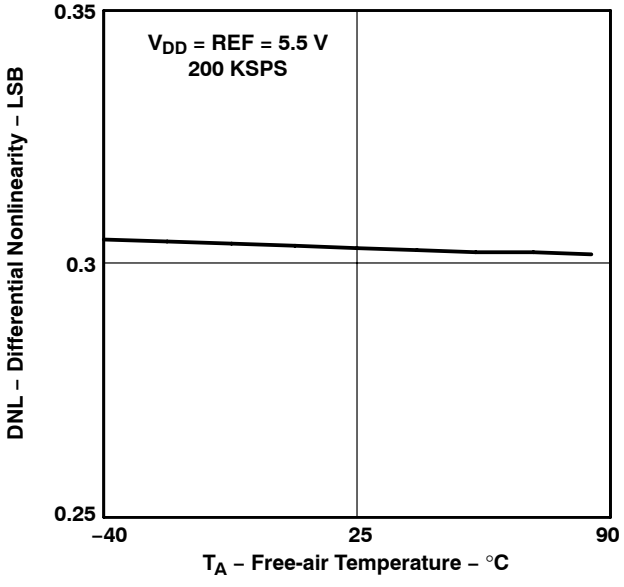

Figure 13

TYPICAL CHARACTERISTICS

OFFSET ERROR vs FREE-AIR TEMPERATURE

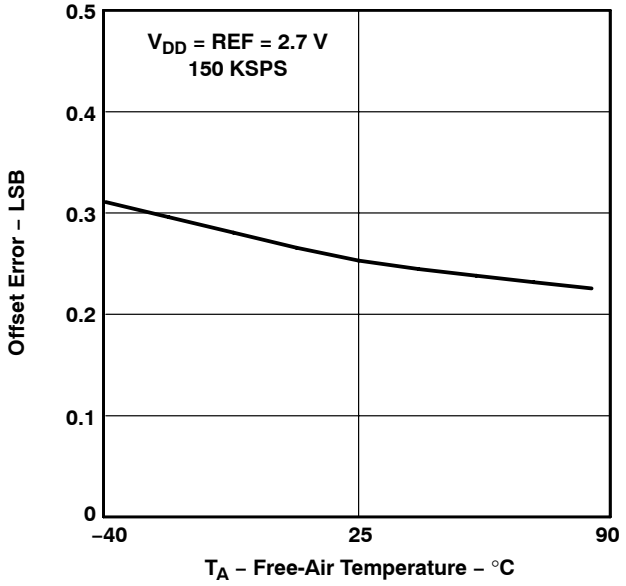

Figure 14

GAIN ERROR vs FREE-AIR TEMPERATURE

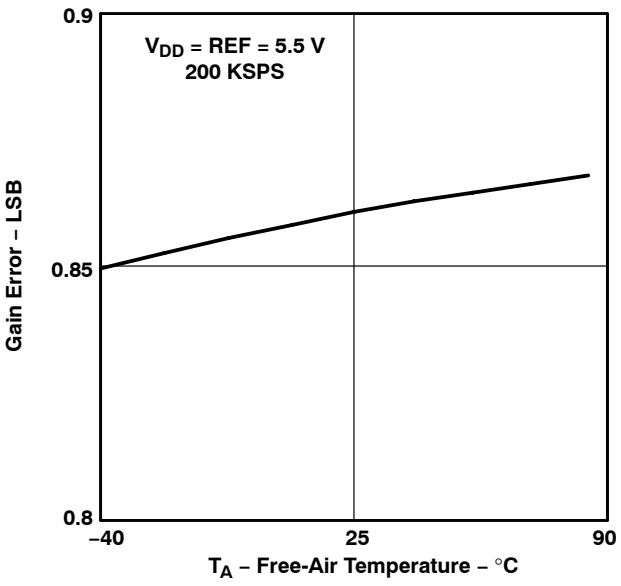

Figure 15

SUPPLY CURRENT vs FREE-AIR TEMPERATURE

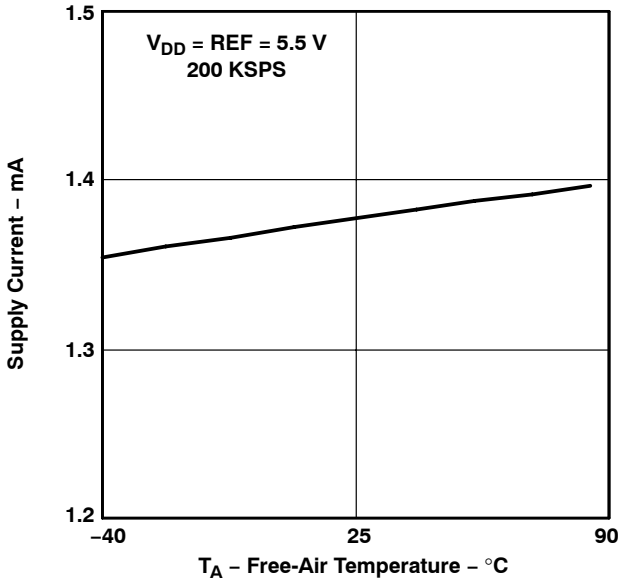

Figure 16

TYPICAL CHARACTERISTICS

INTEGRAL NONLINEARITY ERROR vs DIGITAL OUTPUT CODES

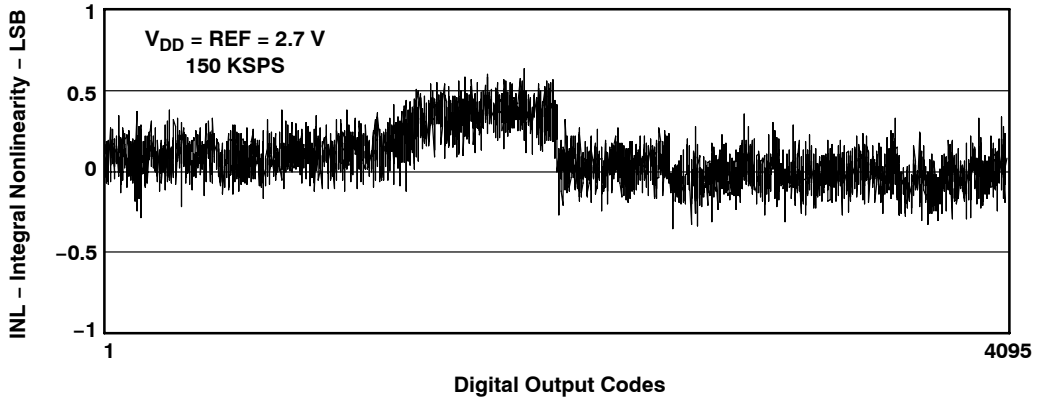

Figure 17

DIFFERENTIAL NONLINEARITY ERROR vs DIGITAL OUTPUT CODES

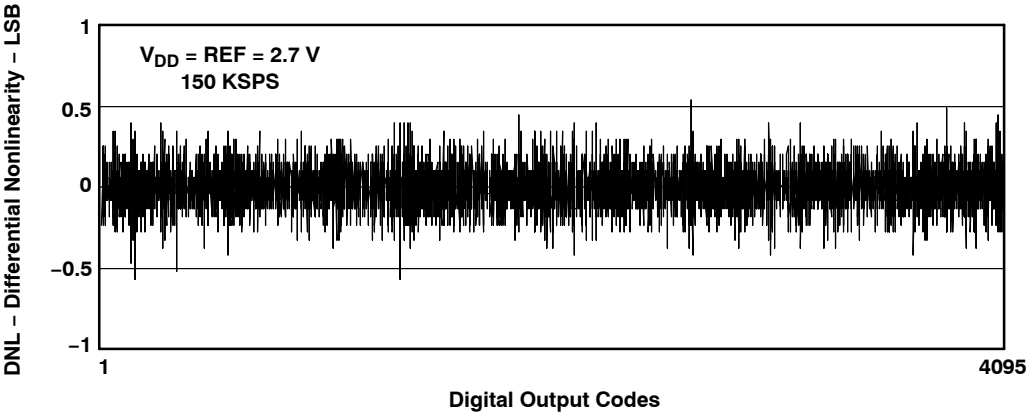

Figure 18

TYPICAL CHARACTERISTICS

INTEGRAL NONLINEARITY ERROR
vs
DIGITAL OUTPUT CODES

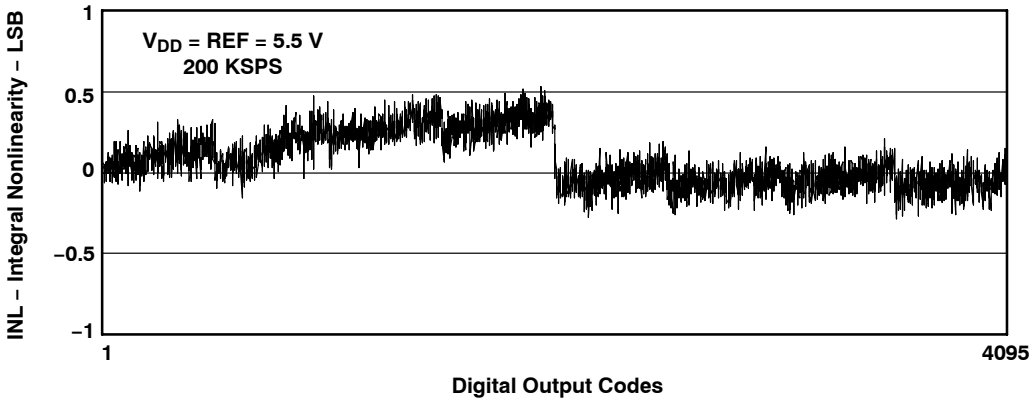

Figure 19

DIFFERENTIAL NONLINEARITY ERROR
vs
DIGITAL OUTPUT CODES

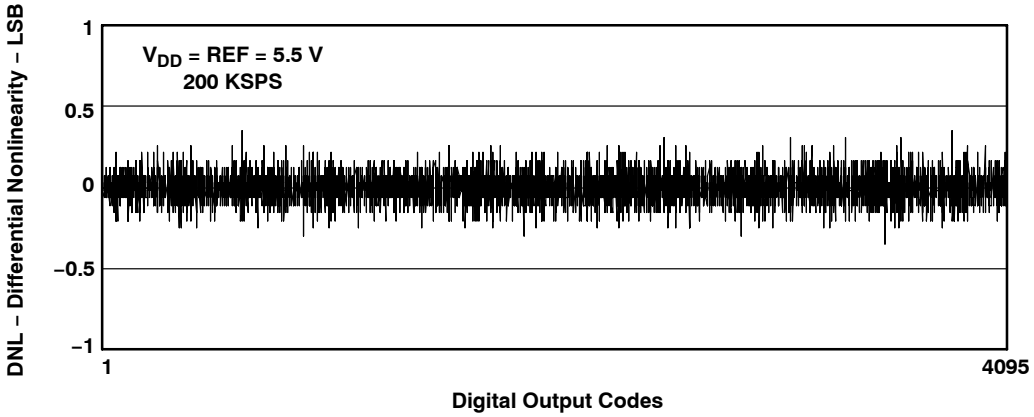

Figure 20

TYPICAL CHARACTERISTICS

2048 POINTS FAST FOURIER TRANSFORM (FFT)

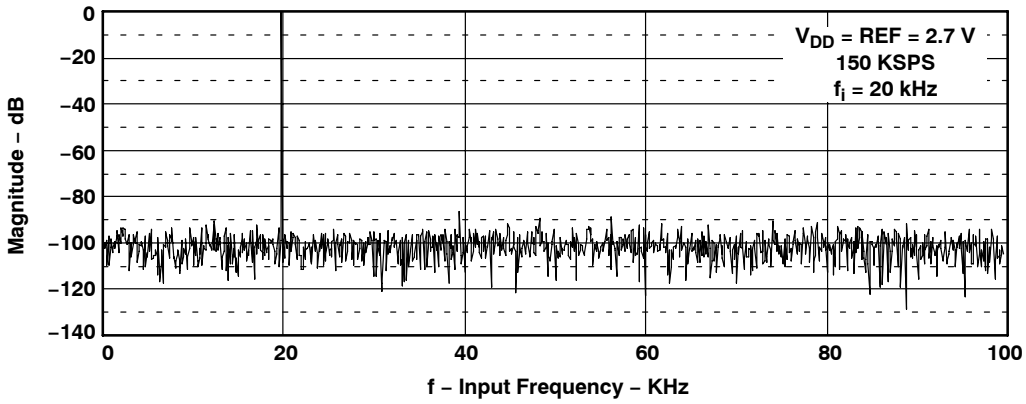

Figure 21

2048 POINTS FAST FOURIER TRANSFORM (FFT)

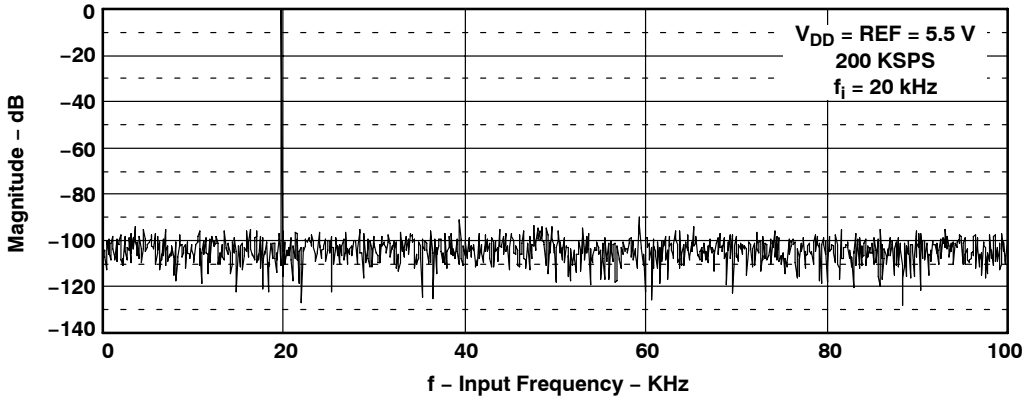

Figure 22

TYPICAL CHARACTERISTICS

SIGNAL-TO-NOISE + DISTORTION vs INPUT FREQUENCY

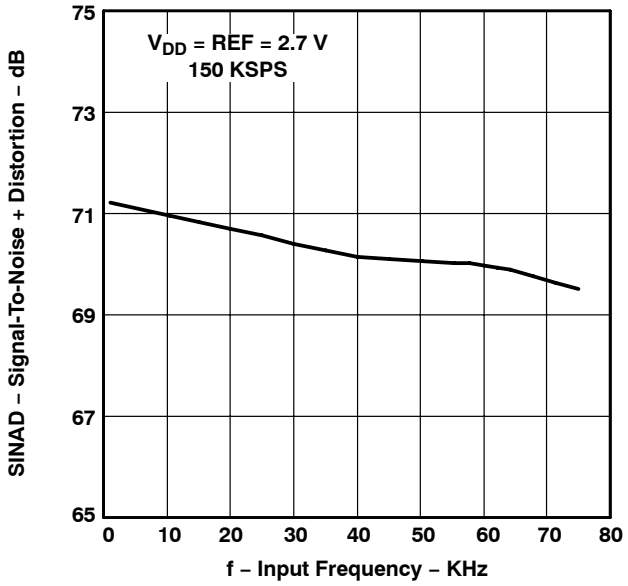

Figure 23

SIGNAL-TO-NOISE + DISTORTION vs INPUT FREQUENCY

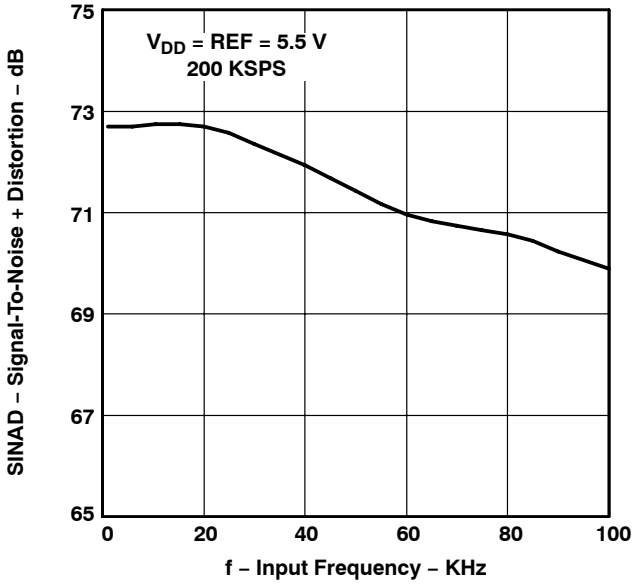

Figure 24

EFFECTIVE NUMBER OF BITS vs INPUT FREQUENCY

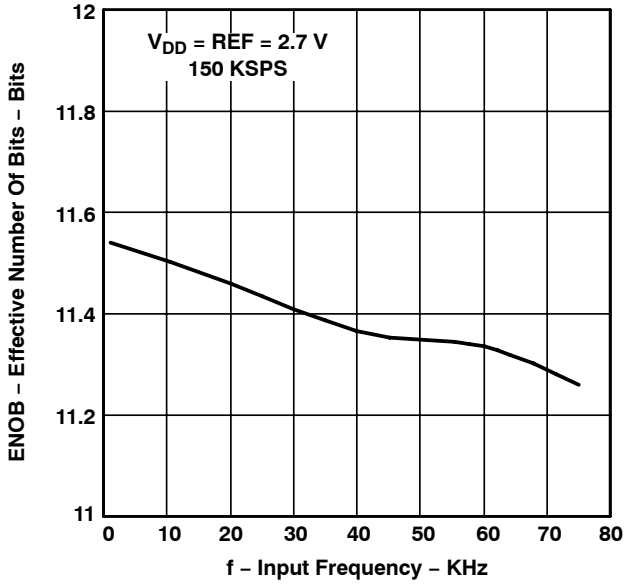

Figure 25

EFFECTIVE NUMBER OF BITS vs INPUT FREQUENCY

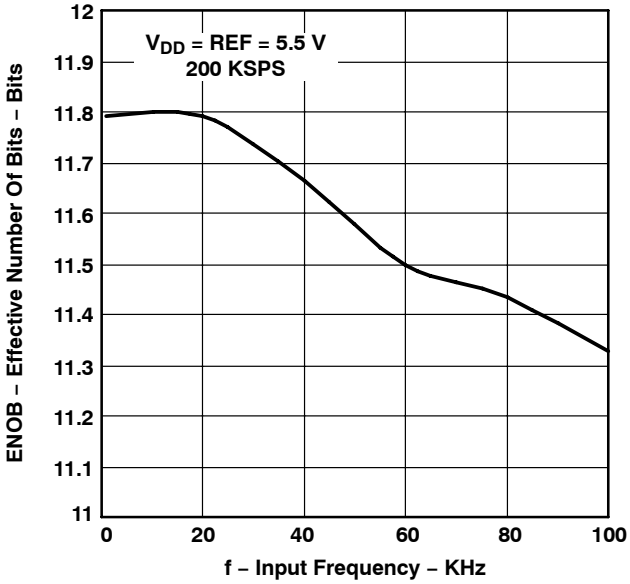

Figure 26

TYPICAL CHARACTERISTICS

TOTAL HARMONIC DISTORTION vs INPUT FREQUENCY

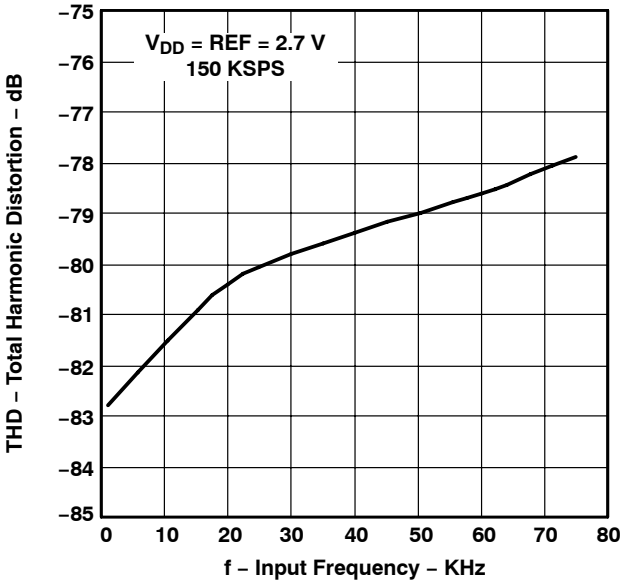

Figure 27

TOTAL HARMONIC DISTORTION vs INPUT FREQUENCY

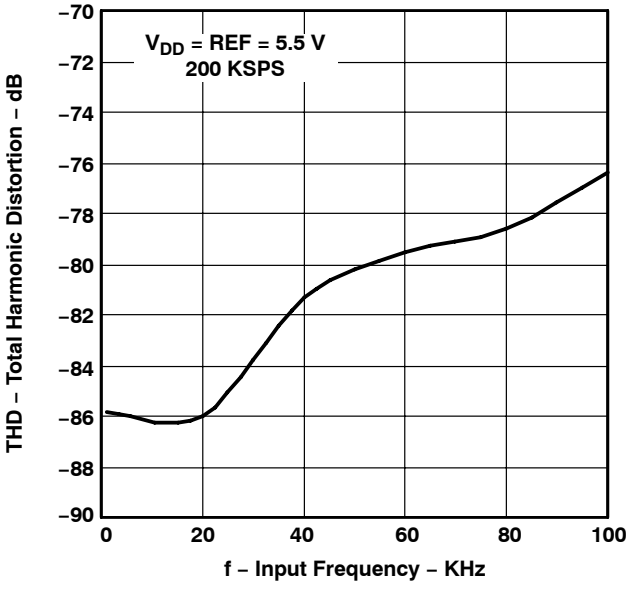

Figure 28

APPLICATION INFORMATION

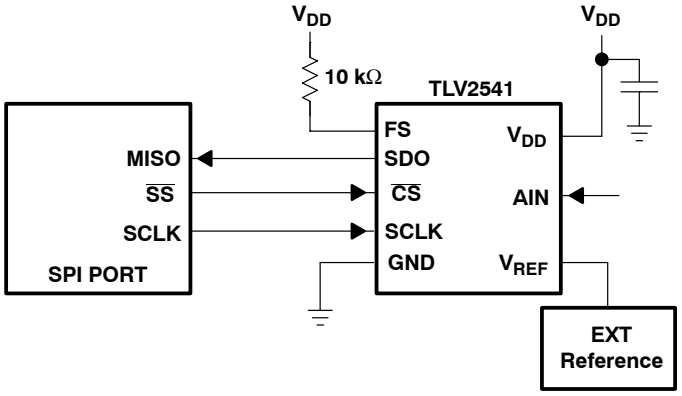

(a)

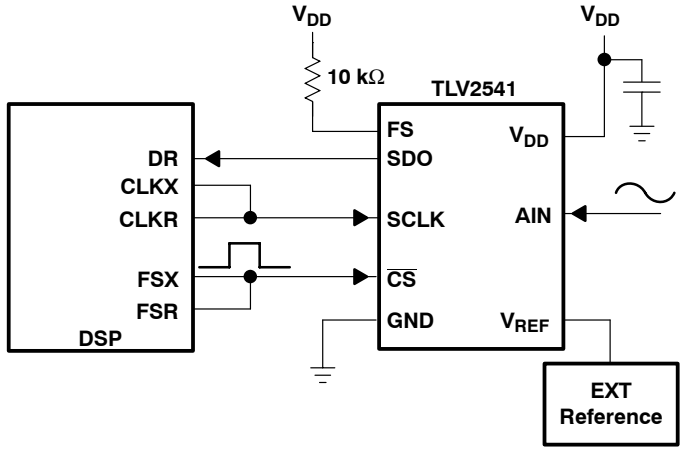

(b)

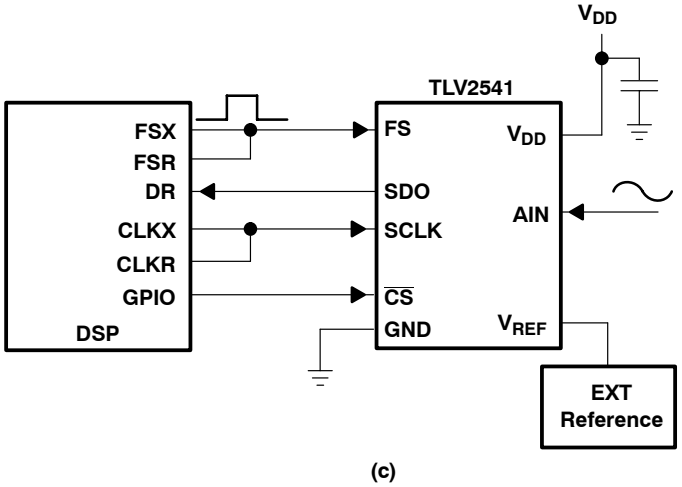

(c)

Figure 29. Typical TLV2541 Interface to a TMS320 DSP

APPLICATION INFORMATION

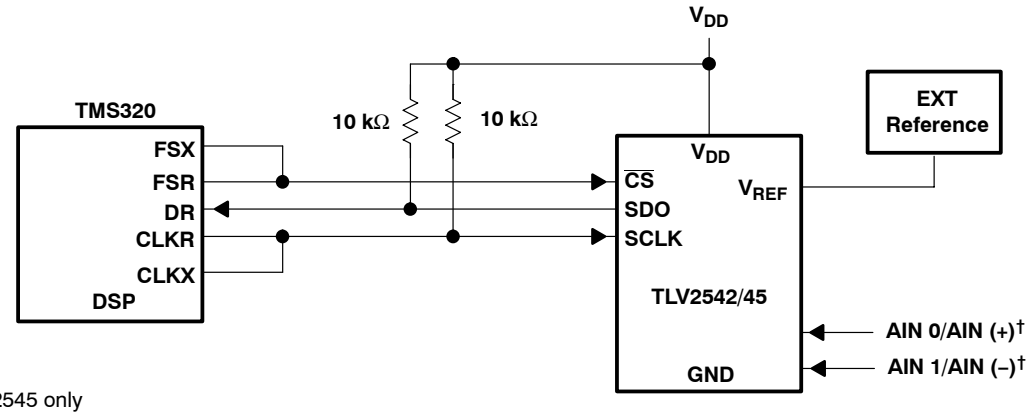

† For TLV2545 only

Figure 30. Typical TLV2542/45 Interface to a TMS320 DSP

TEXAS INSTRUMENTS
POST OFFICE BOX 655303 • DALLAS, TEXAS 75265
POST OFFICE BOX 1443 • HOUSTON, TEXAS 77251–1443

PACKAGING INFORMATION

Orderable part number	Status (1)	Material type (2)	Package | Pins	Package qty | Carrier	RoHS (3)	Lead finish/ Ball material (4)	MSL rating/ Peak reflow (5)	Op temp (°C)	Part marking (6)
TLV2541CDGK	Active	Production	VSSOP (DGK) | 8	80 | TUBE	Yes	NIPDAUAG	Level-1-260C-UNLIM	0 to 70	AGZ
TLV2541CDGK.A	Active	Production	VSSOP (DGK) | 8	80 | TUBE	Yes	NIPDAUAG	Level-1-260C-UNLIM	0 to 70	AGZ
TLV2541CDGKR	Active	Production	VSSOP (DGK) | 8	2500 | LARGE T&R	Yes	NIPDAUAG	Level-1-260C-UNLIM	0 to 70	AGZ
TLV2541CDGKR.A	Active	Production	VSSOP (DGK) | 8	2500 | LARGE T&R	Yes	NIPDAUAG	Level-1-260C-UNLIM	0 to 70	AGZ
TLV2541ID	Active	Production	SOIC (D) | 8	75 | TUBE	Yes	NIPDAU	Level-1-260C-UNLIM	-40 to 85	2541I
TLV2541ID.A	Active	Production	SOIC (D) | 8	75 | TUBE	Yes	NIPDAU	Level-1-260C-UNLIM	-40 to 85	2541I
TLV2541IDG4	Active	Production	SOIC (D) | 8	75 | TUBE	Yes	NIPDAU	Level-1-260C-UNLIM	-40 to 85	2541I
TLV2541IDGK	Active	Production	VSSOP (DGK) | 8	80 | TUBE	Yes	NIPDAUAG	Level-1-260C-UNLIM	-40 to 85	AHA
TLV2541IDGK.A	Active	Production	VSSOP (DGK) | 8	80 | TUBE	Yes	NIPDAUAG	Level-1-260C-UNLIM	-40 to 85	AHA
TLV2541IDGKR	Active	Production	VSSOP (DGK) | 8	2500 | LARGE T&R	Yes	NIPDAUAG	Level-1-260C-UNLIM	-40 to 85	AHA
TLV2541IDGKR.A	Active	Production	VSSOP (DGK) | 8	2500 | LARGE T&R	Yes	NIPDAUAG	Level-1-260C-UNLIM	-40 to 85	AHA
TLV2541IDR	Active	Production	SOIC (D) | 8	2500 | LARGE T&R	Yes	NIPDAU	Level-1-260C-UNLIM	-40 to 85	2541I
TLV2541IDR.A	Active	Production	SOIC (D) | 8	2500 | LARGE T&R	Yes	NIPDAU	Level-1-260C-UNLIM	-40 to 85	2541I
TLV2542CDGK	Active	Production	VSSOP (DGK) | 8	80 | TUBE	Yes	NIPDAUAG	Level-1-260C-UNLIM	0 to 70	AHB
TLV2542CDGK.A	Active	Production	VSSOP (DGK) | 8	80 | TUBE	Yes	NIPDAUAG	Level-1-260C-UNLIM	0 to 70	AHB
TLV2542ID	Active	Production	SOIC (D) | 8	75 | TUBE	Yes	NIPDAU	Level-1-260C-UNLIM	-40 to 85	2542I
TLV2542ID.A	Active	Production	SOIC (D) | 8	75 | TUBE	Yes	NIPDAU	Level-1-260C-UNLIM	-40 to 85	2542I
TLV2542IDGK	Active	Production	VSSOP (DGK) | 8	80 | TUBE	Yes	NIPDAUAG	Level-1-260C-UNLIM	-40 to 85	AHC
TLV2542IDGK.A	Active	Production	VSSOP (DGK) | 8	80 | TUBE	Yes	NIPDAUAG	Level-1-260C-UNLIM	-40 to 85	AHC
TLV2542IDGKR	Active	Production	VSSOP (DGK) | 8	2500 | LARGE T&R	Yes	NIPDAUAG	Level-1-260C-UNLIM	-40 to 85	AHC
TLV2542IDGKR.A	Active	Production	VSSOP (DGK) | 8	2500 | LARGE T&R	Yes	NIPDAUAG	Level-1-260C-UNLIM	-40 to 85	AHC
TLV2542IDR	Active	Production	SOIC (D) | 8	2500 | LARGE T&R	Yes	NIPDAU	Level-1-260C-UNLIM	-40 to 85	2542I
TLV2542IDR.A	Active	Production	SOIC (D) | 8	2500 | LARGE T&R	Yes	NIPDAU	Level-1-260C-UNLIM	-40 to 85	2542I
TLV2545CDGK	Active	Production	VSSOP (DGK) | 8	80 | TUBE	Yes	NIPDAUAG	Level-1-260C-UNLIM	0 to 70	AHD
TLV2545CDGK.A	Active	Production	VSSOP (DGK) | 8	80 | TUBE	Yes	NIPDAUAG	Level-1-260C-UNLIM	0 to 70	AHD
TLV2545ID	Active	Production	SOIC (D) | 8	75 | TUBE	Yes	NIPDAU	Level-1-260C-UNLIM	-40 to 85	2545I
TLV2545ID.A	Active	Production	SOIC (D) | 8	75 | TUBE	Yes	NIPDAU	Level-1-260C-UNLIM	-40 to 85	2545I
TLV2545IDGK	Active	Production	VSSOP (DGK) | 8	80 | TUBE	Yes	NIPDAUAG	Level-1-260C-UNLIM	-40 to 85	AHE
TLV2545IDGK.A	Active	Production	VSSOP (DGK) | 8	80 | TUBE	Yes	NIPDAUAG	Level-1-260C-UNLIM	-40 to 85	AHE

[(1)] **Status:** For more details on status, see our product life cycle.

[(2)] **Material type:** When designated, preproduction parts are prototypes/experimental devices, and are not yet approved or released for full production. Testing and final process, including without limitation quality assurance, reliability performance testing, and/or process qualification, may not yet be complete, and this item is subject to further changes or possible discontinuation. If available for ordering, purchases will be subject to an additional waiver at checkout, and are intended for early internal evaluation purposes only. These items are sold without warranties of any kind.

[(3)] **RoHS values:** Yes, No, RoHS Exempt. See the TI RoHS Statement for additional information and value definition.

[(4)] **Lead finish/Ball material:** Parts may have multiple material finish options. Finish options are separated by a vertical ruled line. Lead finish/Ball material values may wrap to two lines if the finish value exceeds the maximum column width.

[(5)] **MSL rating/Peak reflow:** The moisture sensitivity level ratings and peak solder (reflow) temperatures. In the event that a part has multiple moisture sensitivity ratings, only the lowest level per JEDEC standards is shown. Refer to the shipping label for the actual reflow temperature that will be used to mount the part to the printed circuit board.

[(6)] **Part marking:** There may be an additional marking, which relates to the logo, the lot trace code information, or the environmental category of the part.

Multiple part markings will be inside parentheses. Only one part marking contained in parentheses and separated by a "~" will appear on a part. If a line is indented then it is a continuation of the previous line and the two combined represent the entire part marking for that device.

Important Information and Disclaimer: The information provided on this page represents TI's knowledge and belief as of the date that it is provided. TI bases its knowledge and belief on information provided by third parties, and makes no representation or warranty as to the accuracy of such information. Efforts are underway to better integrate information from third parties. TI has taken and continues to take reasonable steps to provide representative and accurate information but may not have conducted destructive testing or chemical analysis on incoming materials and chemicals. TI and TI suppliers consider certain information to be proprietary, and thus CAS numbers and other limited information may not be available for release.

In no event shall TI's liability arising out of such information exceed the total purchase price of the TI part(s) at issue in this document sold by TI to Customer on an annual basis.

TAPE AND REEL INFORMATION

REEL DIMENSIONS

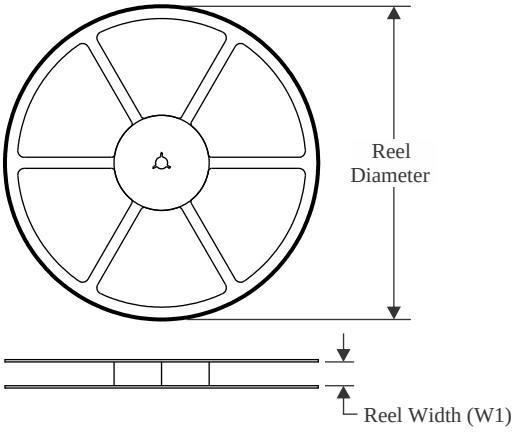

TAPE DIMENSIONS

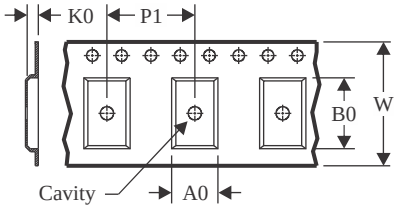

A0	Dimension designed to accommodate the component width
B0	Dimension designed to accommodate the component length
K0	Dimension designed to accommodate the component thickness
W	Overall width of the carrier tape
P1	Pitch between successive cavity centers

QUADRANT ASSIGNMENTS FOR PIN 1 ORIENTATION IN TAPE

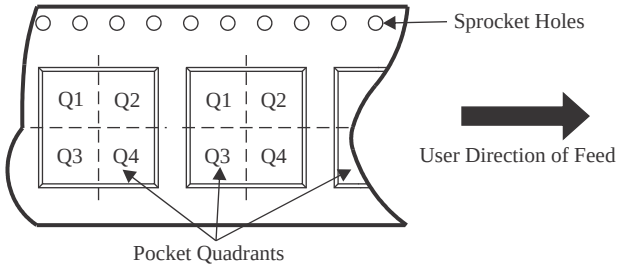

*All dimensions are nominal

Device	Package Type	Package Drawing	Pins	SPQ	Reel Diameter (mm)	Reel Width W1 (mm)	A0 (mm)	B0 (mm)	K0 (mm)	P1 (mm)	W (mm)	Pin1 Quadrant
TLV2541CDGKR	VSSOP	DGK	8	2500	330.0	12.4	5.3	3.4	1.4	8.0	12.0	Q1
TLV2541IDGKR	VSSOP	DGK	8	2500	330.0	12.4	5.3	3.4	1.4	8.0	12.0	Q1
TLV2541IDR	SOIC	D	8	2500	330.0	12.4	6.4	5.2	2.1	8.0	12.0	Q1
TLV2542IDGKR	VSSOP	DGK	8	2500	330.0	12.4	5.3	3.4	1.4	8.0	12.0	Q1
TLV2542IDR	SOIC	D	8	2500	330.0	12.4	6.4	5.2	2.1	8.0	12.0	Q1

TAPE AND REEL BOX DIMENSIONS

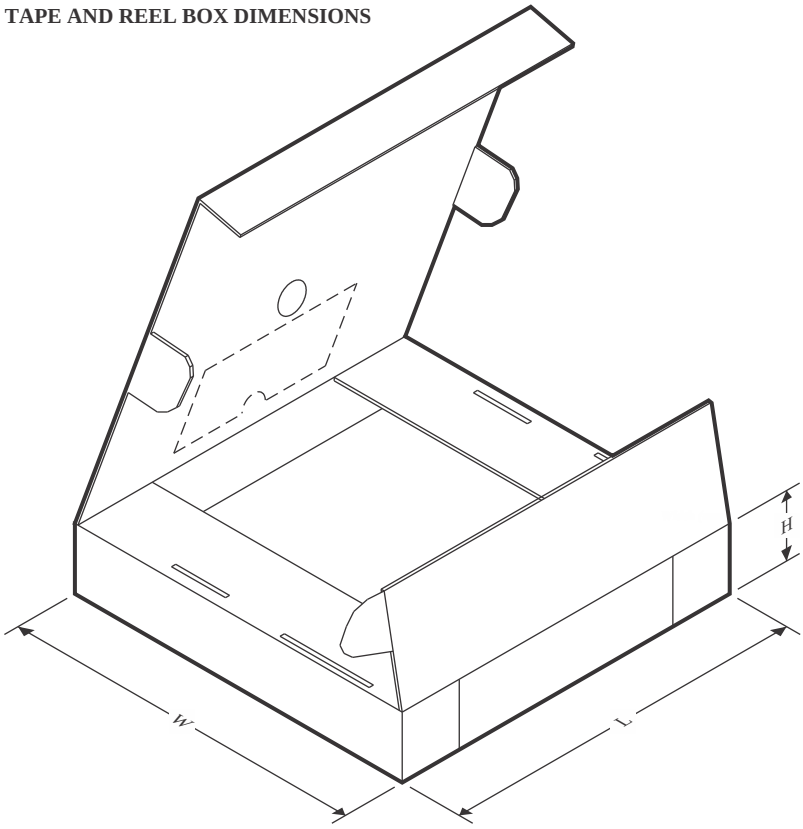

*All dimensions are nominal

Device	Package Type	Package Drawing	Pins	SPQ	Length (mm)	Width (mm)	Height (mm)
TLV2541CDGKR	VSSOP	DGK	8	2500	350.0	350.0	43.0
TLV2541IDGKR	VSSOP	DGK	8	2500	350.0	350.0	43.0
TLV2541IDR	SOIC	D	8	2500	350.0	350.0	43.0
TLV2542IDGKR	VSSOP	DGK	8	2500	350.0	350.0	43.0
TLV2542IDR	SOIC	D	8	2500	350.0	350.0	43.0

TUBE

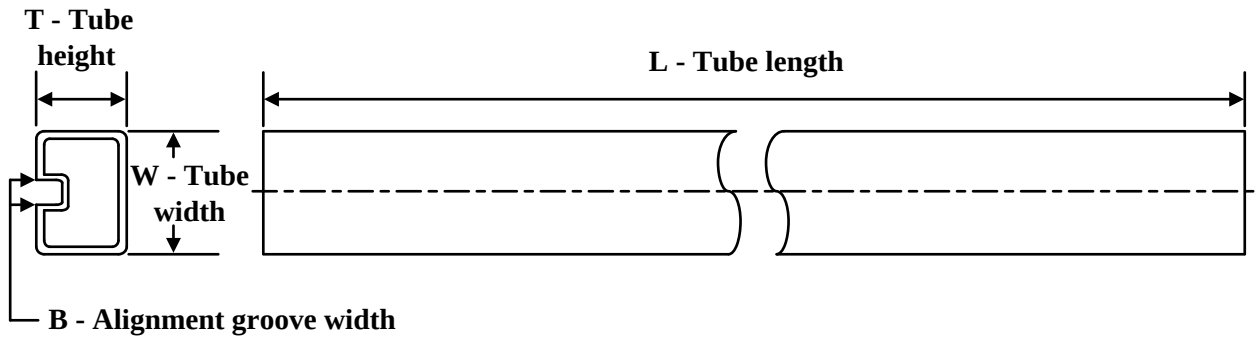

*All dimensions are nominal

Device	Package Name	Package Type	Pins	SPQ	L (mm)	W (mm)	T (µm)	B (mm)
TLV2541CDGK	DGK	VSSOP	8	80	331.47	6.55	3000	2.88
TLV2541CDGK.A	DGK	VSSOP	8	80	331.47	6.55	3000	2.88
TLV2541ID	D	SOIC	8	75	505.46	6.76	3810	4
TLV2541ID.A	D	SOIC	8	75	505.46	6.76	3810	4
TLV2541IDG4	D	SOIC	8	75	505.46	6.76	3810	4
TLV2541IDGK	DGK	VSSOP	8	80	331.47	6.55	3000	2.88
TLV2541IDGK.A	DGK	VSSOP	8	80	331.47	6.55	3000	2.88
TLV2542CDGK	DGK	VSSOP	8	80	331.47	6.55	3000	2.88
TLV2542CDGK.A	DGK	VSSOP	8	80	331.47	6.55	3000	2.88
TLV2542ID	D	SOIC	8	75	505.46	6.76	3810	4
TLV2542ID.A	D	SOIC	8	75	505.46	6.76	3810	4
TLV2542IDGK	DGK	VSSOP	8	80	331.47	6.55	3000	2.88
TLV2542IDGK.A	DGK	VSSOP	8	80	331.47	6.55	3000	2.88
TLV2545CDGK	DGK	VSSOP	8	80	331.47	6.55	3000	2.88
TLV2545CDGK.A	DGK	VSSOP	8	80	331.47	6.55	3000	2.88
TLV2545ID	D	SOIC	8	75	505.46	6.76	3810	4
TLV2545ID.A	D	SOIC	8	75	505.46	6.76	3810	4
TLV2545IDGK	DGK	VSSOP	8	80	331.47	6.55	3000	2.88
TLV2545IDGK.A	DGK	VSSOP	8	80	331.47	6.55	3000	2.88

PACKAGE OUTLINE

DGK0008A

VSSOP - 1.1 mm max height

SMALL OUTLINE PACKAGE

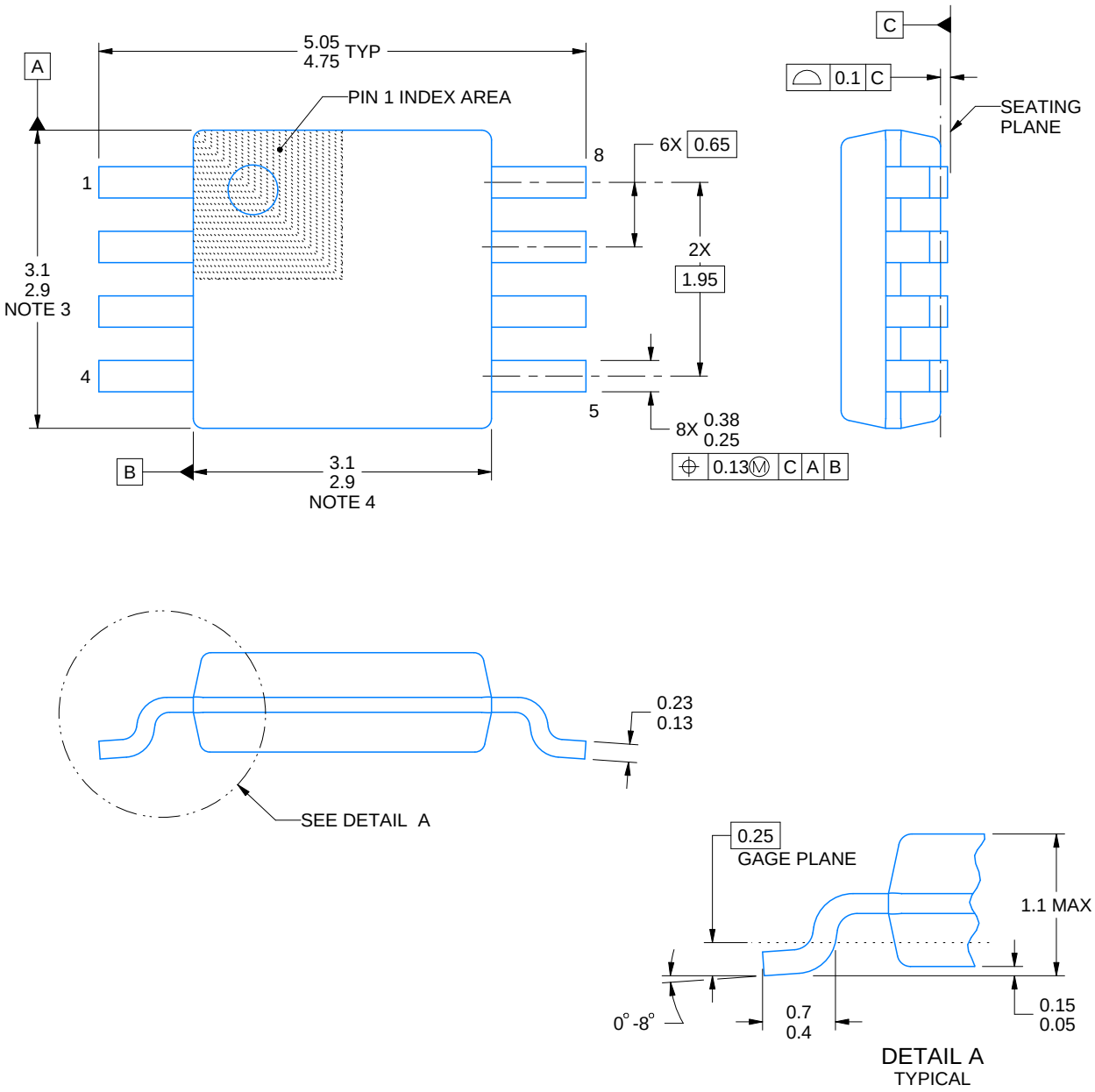

PowerPAD is a trademark of Texas Instruments.

NOTES:

1. All linear dimensions are in millimeters. Any dimensions in parenthesis are for reference only. Dimensioning and tolerancing per ASME Y14.5M.
2. This drawing is subject to change without notice.
3. This dimension does not include mold flash, protrusions, or gate burrs. Mold flash, protrusions, or gate burrs shall not exceed 0.15 mm per side.
4. This dimension does not include interlead flash. Interlead flash shall not exceed 0.25 mm per side.
5. Reference JEDEC registration MO-187.

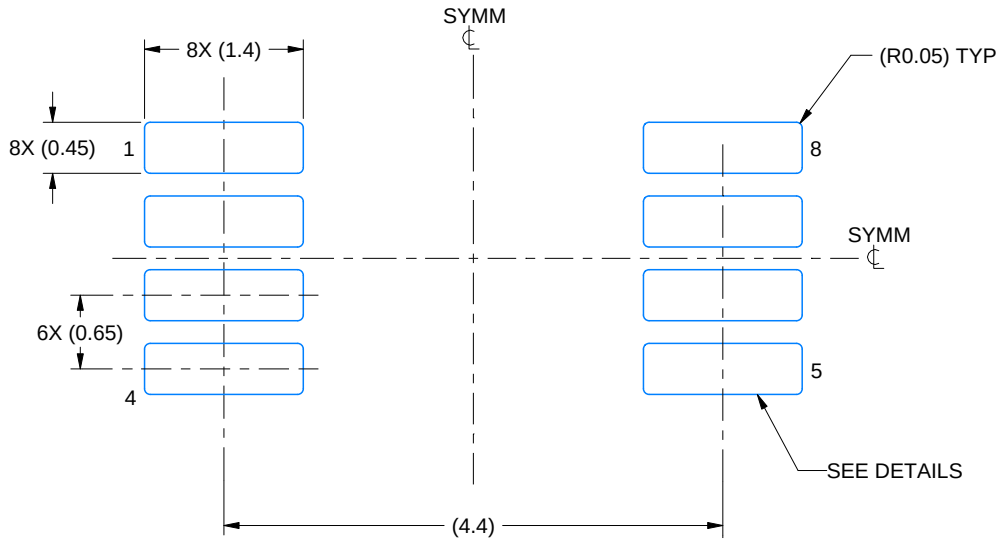

LAND PATTERN EXAMPLE
EXPOSED METAL SHOWN
SCALE: 15X

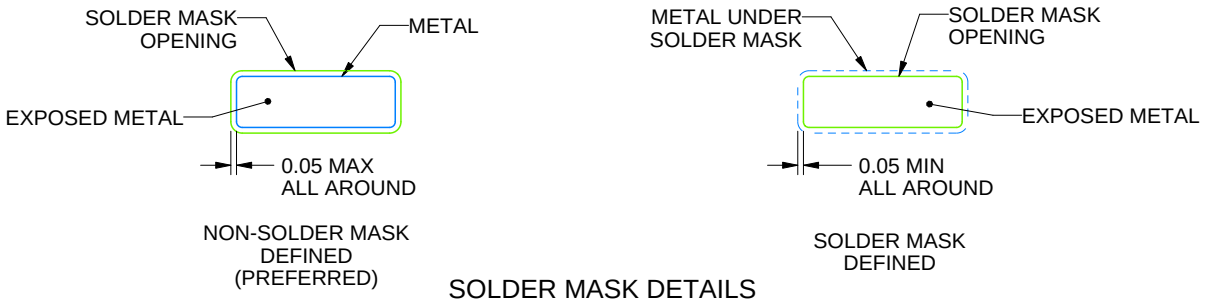

SOLDER MASK DETAILS

4214862/A 04/2023

NOTES: (continued)

6. Publication IPC-7351 may have alternate designs.
7. Solder mask tolerances between and around signal pads can vary based on board fabrication site.
8. Vias are optional depending on application, refer to device data sheet. If any vias are implemented, refer to their locations shown on this view. It is recommended that vias under paste be filled, plugged or tented.
9. Size of metal pad may vary due to creepage requirement.

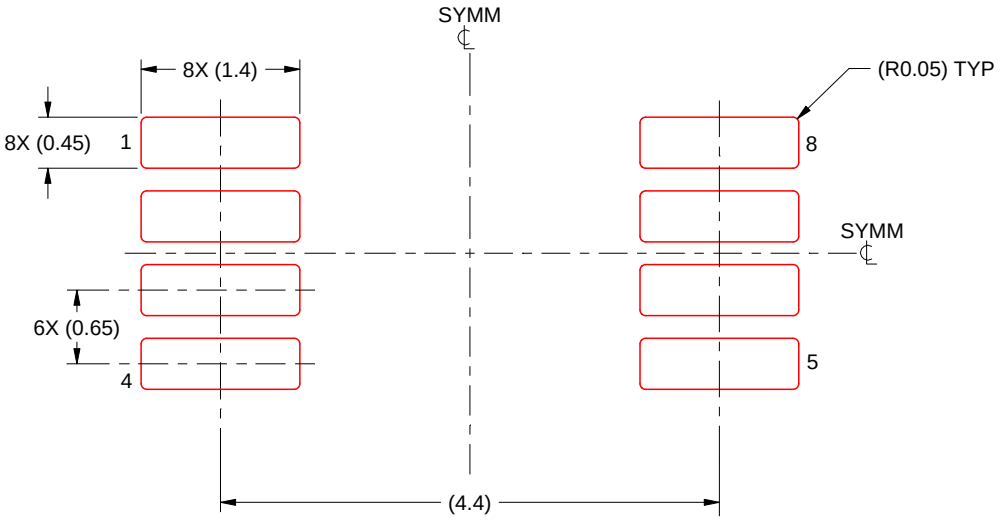

SOLDER PASTE EXAMPLE
SCALE: 15X

4214862/A 04/2023

NOTES: (continued)

11. Laser cutting apertures with trapezoidal walls and rounded corners may offer better paste release. IPC-7525 may have alternate design recommendations.
12. Board assembly site may have different recommendations for stencil design.

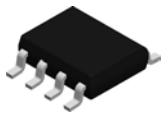

PACKAGE OUTLINE

D0008A

SOIC - 1.75 mm max height

SMALL OUTLINE INTEGRATED CIRCUIT

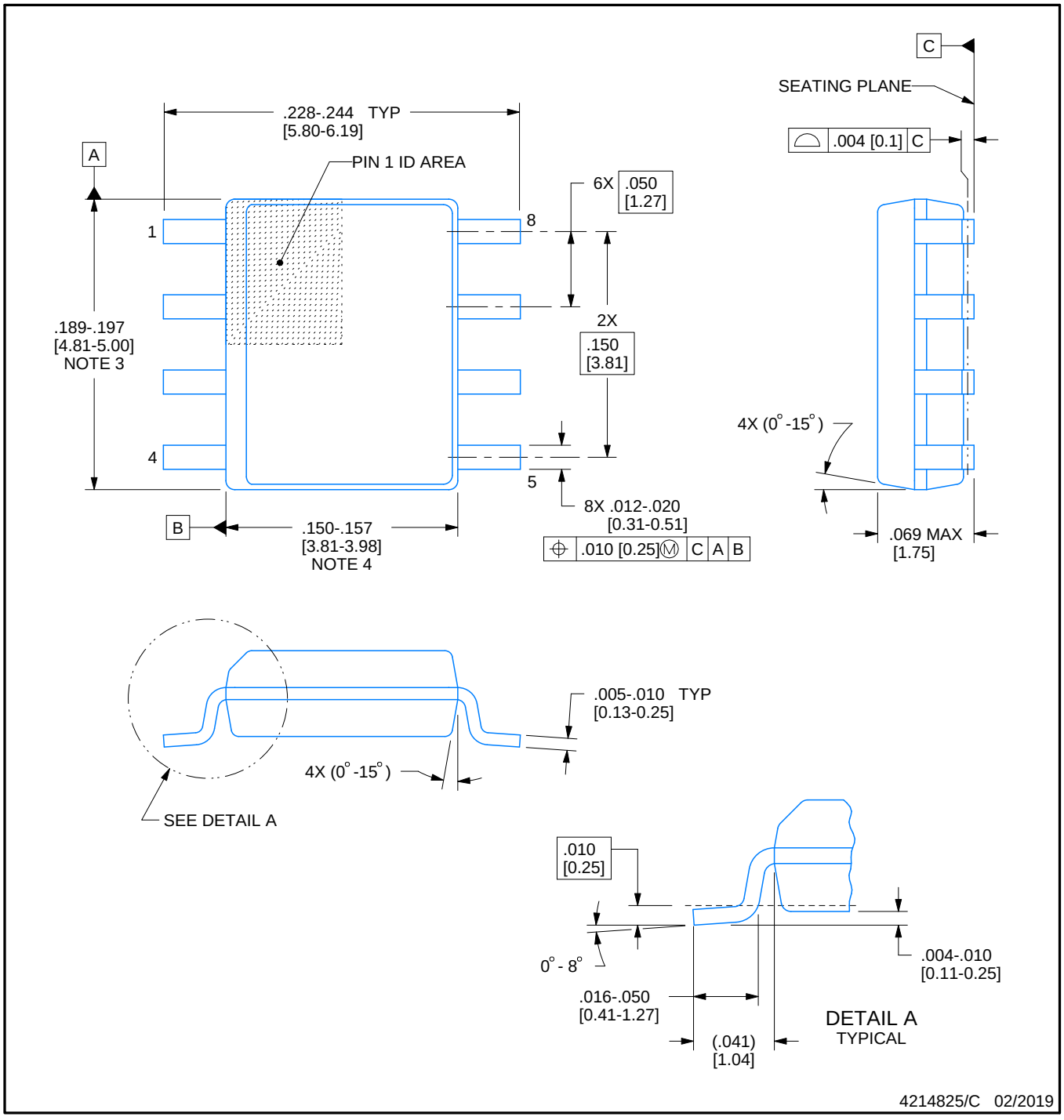

NOTES:

1. Linear dimensions are in inches [millimeters]. Dimensions in parenthesis are for reference only. Controlling dimensions are in inches. Dimensioning and tolerancing per ASME Y14.5M.
2. This drawing is subject to change without notice.
3. This dimension does not include mold flash, protrusions, or gate burrs. Mold flash, protrusions, or gate burrs shall not exceed .006 [0.15] per side.
4. This dimension does not include interlead flash.
5. Reference JEDEC registration MS-012, variation AA.

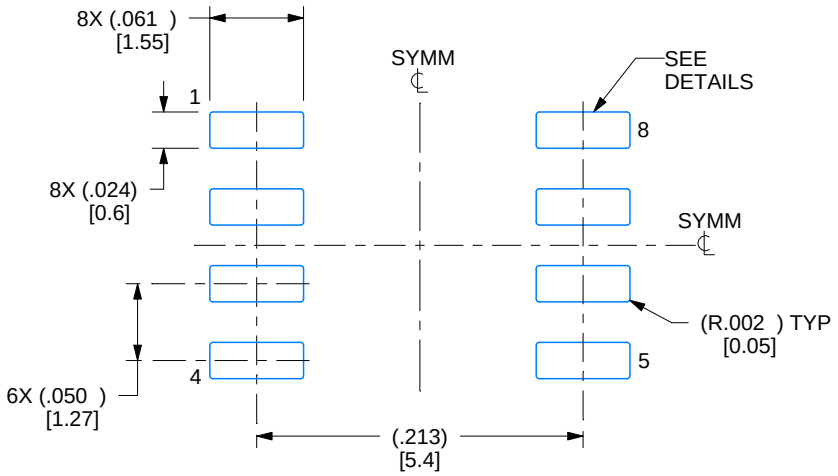

LAND PATTERN EXAMPLE
EXPOSED METAL SHOWN
SCALE:8X

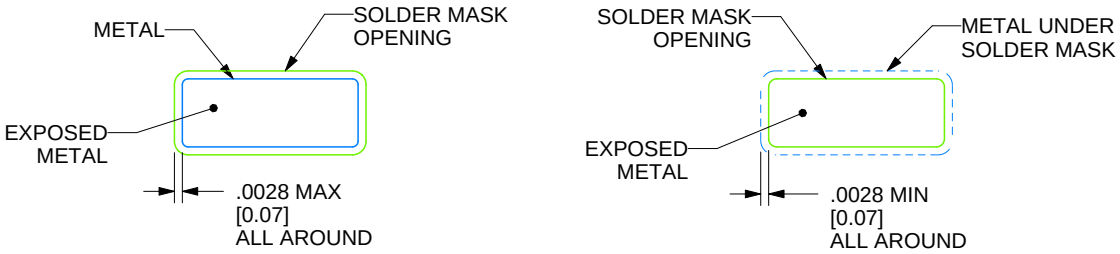

SOLDER MASK DETAILS

4214825/C 02/2019

NOTES: (continued)

6. Publication IPC-7351 may have alternate designs.
7. Solder mask tolerances between and around signal pads can vary based on board fabrication site.

EXAMPLE STENCIL DESIGN

D0008A

SOIC - 1.75 mm max height

SMALL OUTLINE INTEGRATED CIRCUIT

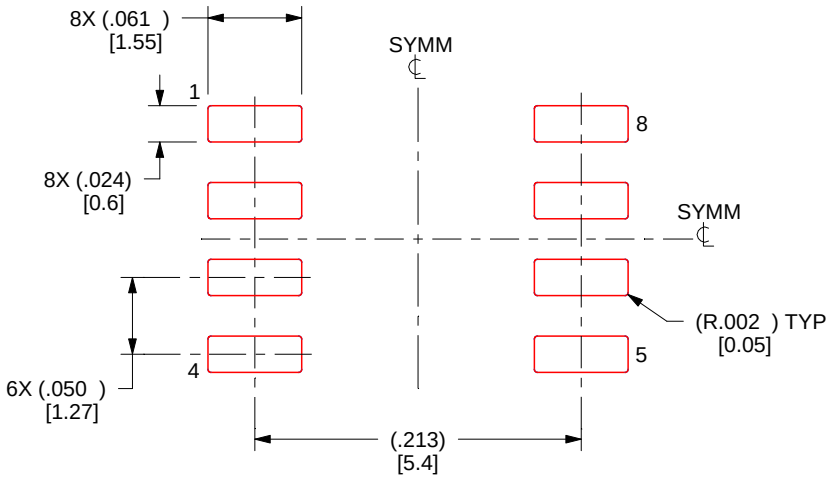

SOLDER PASTE EXAMPLE
BASED ON .005 INCH [0.125 MM] THICK STENCIL
SCALE:8X

4214825/C 02/2019

NOTES: (continued)

8. Laser cutting apertures with trapezoidal walls and rounded corners may offer better paste release. IPC-7525 may have alternate design recommendations.
9. Board assembly site may have different recommendations for stencil design.

IMPORTANT NOTICE AND DISCLAIMER

TI PROVIDES TECHNICAL AND RELIABILITY DATA (INCLUDING DATASHEETS), DESIGN RESOURCES (INCLUDING REFERENCE DESIGNS), APPLICATION OR OTHER DESIGN ADVICE, WEB TOOLS, SAFETY INFORMATION, AND OTHER RESOURCES “AS IS” AND WITH ALL FAULTS, AND DISCLAIMS ALL WARRANTIES, EXPRESS AND IMPLIED, INCLUDING WITHOUT LIMITATION ANY IMPLIED WARRANTIES OF MERCHANTABILITY, FITNESS FOR A PARTICULAR PURPOSE OR NON-INFRINGEMENT OF THIRD PARTY INTELLECTUAL PROPERTY RIGHTS.

These resources are intended for skilled developers designing with TI products. You are solely responsible for (1) selecting the appropriate TI products for your application, (2) designing, validating and testing your application, and (3) ensuring your application meets applicable standards, and any other safety, security, regulatory or other requirements.

These resources are subject to change without notice. TI grants you permission to use these resources only for development of an application that uses the TI products described in the resource. Other reproduction and display of these resources is prohibited. No license is granted to any other TI intellectual property right or to any third party intellectual property right. TI disclaims responsibility for, and you fully indemnify TI and its representatives against any claims, damages, costs, losses, and liabilities arising out of your use of these resources.

TI’s products are provided subject to TI’s Terms of Sale, TI’s General Quality Guidelines, or other applicable terms available either on ti.com or provided in conjunction with such TI products. TI’s provision of these resources does not expand or otherwise alter TI’s applicable warranties or warranty disclaimers for TI products. Unless TI explicitly designates a product as custom or customer-specified, TI products are standard, catalog, general purpose devices.

TI objects to and rejects any additional or different terms you may propose.

Copyright © 2026, Texas Instruments Incorporated

Last updated 10/2025