- **Maximum Throughput 200-KSPS**
- **Built-In Reference, Conversion Clock and 8× FIFO**
- **Differential/Integral Nonlinearity Error: ±1.2 LSB at −55°C to 125°C**
- **Signal-to-Noise and Distortion Ratio: 65 dB, f_i = 12-kHz at −55°C to 125°C**
- **Spurious Free Dynamic Range: 75 dB, f_i = 12- kHz**
- **SPI/DSP-Compatible Serial Interfaces With SCLK up to 20-MHz**
- **Single Wide Range Supply 3 Vdc to 5.5 Vdc**
- **Analog Input Range 0-V to Supply Voltage With 500 kHz BW**
- **Hardware Controlled and Programmable Sampling Period**
- **Low Operating Current (1-mA at 3.3-V, 2-mA at 5.5-V With External Ref, 1.7-mA at 3.3-V, 2.4-mA at 5.5-V With Internal Ref)**
- **Power Down: Software/Hardware Power-Down Mode (1 μA Typ, Ext Ref), Autopower-Down Mode (1 μA Typ, Ext Ref)**
- **Programmable Auto-Channel Sweep**
- **Available in Q-Temp Automotive**
  High Reliability Automotive Applications
  Configuration Control/Print Support
  Qualification to Automotive Standards

TLV2548Q . . . DW PACKAGE
(TOP VIEW)

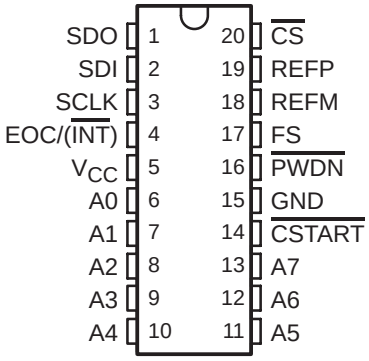

TLV2544Q . . . D PACKAGE
(TOP VIEW)

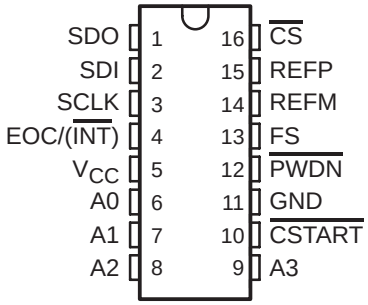

TLV2548M . . . FK PACKAGE
(TOP VIEW)

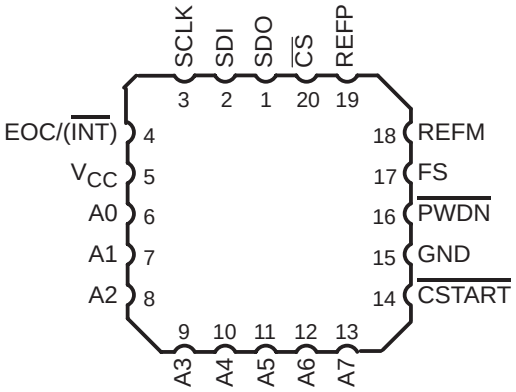

description

The TLV2544Q, TLV2548Q, and TLV2548M are a family of high performance, 12-bit low power, 3.5 μs, CMOS analog-to-digital converters (ADC) which operate from a single 3-V to 5.5-V power supply. These devices have three digital inputs and a 3-state output [chip select ($\overline{CS}$), serial input-output clock (SCLK), serial data input (SDI), and serial data output (SDO)] that provide a direct 4-wire interface to the serial port of most popular host microprocessors (SPI interface). When interfaced with a DSP, a frame sync (FS) signal is used to indicate the start of a serial data frame.

Please be aware that an important notice concerning availability, standard warranty, and use in critical applications of Texas Instruments semiconductor products and disclaimers thereto appears at the end of this data sheet.

PRODUCTION DATA information is current as of publication date. Products conform to specifications per the terms of Texas Instruments standard warranty. Production processing does not necessarily include testing of all parameters.

Copyright © 2009, Texas Instruments Incorporated

description (continued)

In addition to a high-speed A/D converter and versatile control capability, these devices have an on-chip analog multiplexer that can select any analog inputs or one of three internal self-test voltages. The sample-and-hold function is automatically started after the fourth SCLK edge (normal sampling) or can be controlled by a special pin, $\overline{\text{CSTART}}$, to extend the sampling period (extended sampling). The normal sampling period can also be programmed as short (12 SCLKs) or as long (24 SCLKs) to accommodate faster SCLK operation popular among high-performance signal processors. The TLV2548 and TLV2544 are designed to operate with very low power consumption. The power-saving feature is further enhanced with software/hardware/autopower-down modes and programmable conversion speeds. The conversion clock (OSC) and reference are built-in. The converter can use the external SCLK as the source of the conversion clock to achieve higher (up to 2.8 μs when a 20 MHz SCLK is used) conversion speed. Two different internal reference voltages are available. An optional external reference can also be used to achieve maximum flexibility.

The TLV2544Q and the TLV2548Q are characterized for operation from −40°C to 125°C. The TLV2548M is characterized for operation from −55°C to 125°C.

functional block diagram

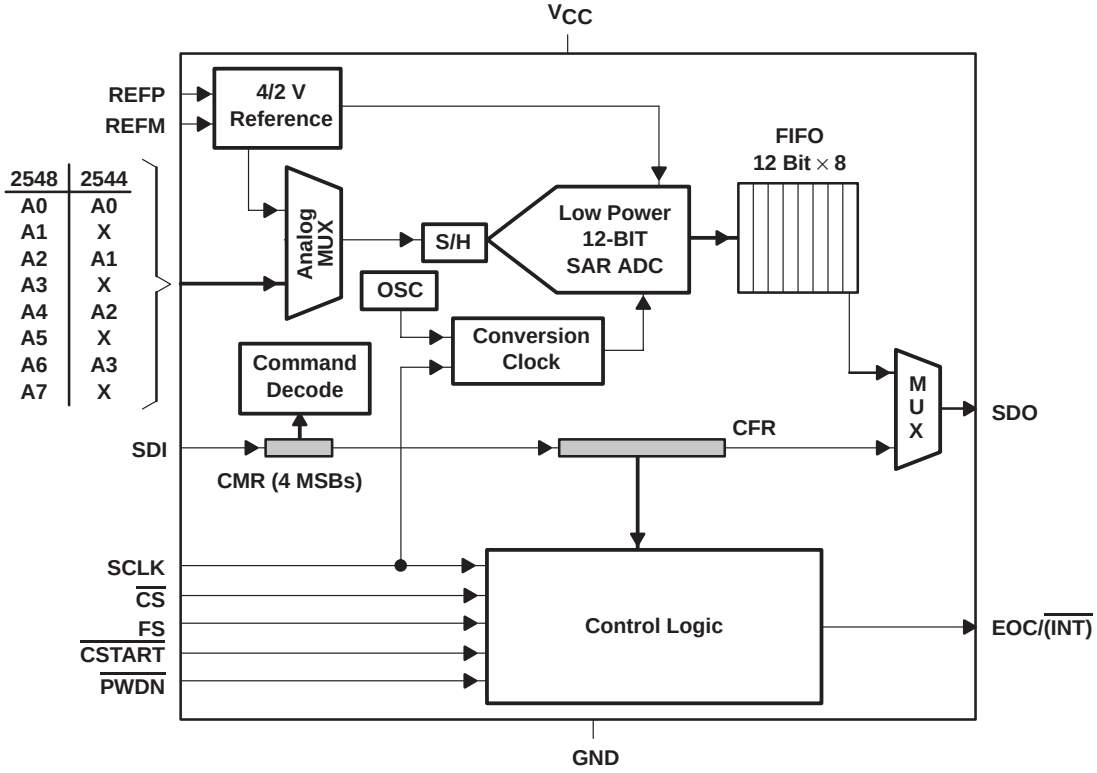

AVAILABLE OPTIONS

T_A	20-SOIC (DW)	16-SOIC (D)	20-LCCC (FK)
−40°C to 125°C	TLV2548QDW	TLV2544QD	—
−55°C to 125°C	—	—	TLV2548MFK

Terminal Functions

TERMINAL NAME	TERMINAL NO. TLV2544	TERMINAL NO. TLV2548	I/O	DESCRIPTION
A0 A1 A2 A3	6 7 8 9	6 7 8 9	I	Analog signal inputs. The analog inputs are applied to these terminals and are internally multiplexed. The driving source impedance should be less than or equal to 1 kΩ. For a source impedance greater than 1 kΩ, use the asynchronous conversion start signal $\overline{\text{CSTART}}$ ($\overline{\text{CSTART}}$ low time controls the sampling period) or program long sampling period to increase the sampling time.
A0 A1 A2 A3 A4 A5 A6 A7		6 7 8 9 10 11 12 13		
$\overline{\text{CS}}$	16	20	I	Chip select. A high-to-low transition on the $\overline{\text{CS}}$ input resets the internal 4-bit counter, enables SDI, and removes SDO from 3-state within a maximum setup time. SDI is disabled within a setup time after the 4-bit counter counts to 16 (clock edges) or a low-to-high transition of $\overline{\text{CS}}$ whichever happens first. NOTE: $\overline{\text{CS}}$ falling and rising edges need to happen when SCLK is low for a microprocessor interface such as SPI.
$\overline{\text{CSTART}}$	10	14	I	This terminal controls the start of sampling of the analog input from a selected multiplex channel. Sampling time starts with the falling edge of $\overline{\text{CSTART}}$ and ends with the rising edge of $\overline{\text{CSTART}}$ as long as $\overline{\text{CS}}$ is held high. In mode 01, select cycle, $\overline{\text{CSTART}}$ can be issued as soon as CHANNEL is selected which means the fifth SCLK during the select cycle, but the effective sampling time is not started until $\overline{\text{CS}}$ goes to high. The rising edge of $\overline{\text{CSTART}}$ (when $\overline{\text{CS}}$ = 1) also starts the conversion. Tie this terminal to V_{CC} if not used.
EOC/($\overline{\text{INT}}$)	4	4	O	End of conversion or interrupt to host processor. [PROGRAMMED AS EOC]: This output goes from a high-to-low logic level at the end of the sampling period and remains low until the conversion is complete and data are ready for transfer. EOC is used in conversion mode 00 only. [PROGRAMMED AS $\overline{\text{INT}}$]: This pin can also be programmed as an interrupt output signal to the host processor. The falling edge of $\overline{\text{INT}}$ indicates data are ready for output. The following $\overline{\text{CS}}\downarrow$ or $\overline{\text{FS}}$ clears $\overline{\text{INT}}$.
FS	13	17	I	DSP frame sync input. Indication of the start of a serial data frame in or out of the device. If FS remains low after the falling edge of $\overline{\text{CS}}$, SDI is not enabled until an active FS is presented. A high-to-low transition on the FS input resets the internal 4-bit counter and enables SDI within a maximum setup time. SDI is disabled within a setup time after the 4-bit counter counts to 16 (clock edges) or a low-to-high transition of $\overline{\text{CS}}$ whichever happens first. Tie this terminal to V_{CC} if not used. NOTE: The current silicon will react to FS input irrespective of the state of $\overline{\text{CS}}$ signal.
GND	11	15	I	Ground return for the internal circuitry. Unless otherwise noted, all voltage measurements are with respect to GND.
$\overline{\text{PWDN}}$	12	16	I	Both analog and reference circuits are powered down when this pin is at logic zero. The device can be restarted by active $\overline{\text{CS}}$, $\overline{\text{FS}}$ or $\overline{\text{CSTART}}$ after this pin is pulled back to logic one.
SCLK	3	3	I	Input serial clock. This terminal receives the serial SCLK from the host processor. SCLK is used to clock the input SDI to the input register. When programmed, it may also be used as the source of the conversion clock. NOTE: This device supports CPOL (clock polarity) = 0, which is SCLK returns to zero when idling for SPI compatible interface.
SDI	2	2	I	Serial data input. The input data is presented with the MSB (D15) first. The first 4-bit MSBs, D(15−12) are decoded as one of the 16 commands (12 only for the TLV2544). The configure write commands require an additional 12 bits of data. When FS is not used (FS =1), the first MSB (D15) is expected after the falling edge of CS and is latched in on the rising edges of SCLK (after $\overline{\text{CS}}\downarrow$). When FS is used (typical with an active FS from a DSP) the first MSB (D15) is expected after the falling edge of FS and is latched in on the falling edges of SCLK.

Terminal Functions (Continued)

TERMINAL			I/O	DESCRIPTION
NAME	NO.			
	TLV2544	TLV2548		
SDO	1	1	O	The 3-state serial output for the A/D conversion result. SDO is kept in the high-impedance state when $\overline{CS}$ is high and after the $\overline{CS}$ falling edge and until the MSB (D15) is presented. The output format is MSB (D15) first. When FS is not used (FS = 1 at the falling edge of $\overline{CS}$), the MSB (D15) is presented to the SDO pin after the $\overline{CS}$ falling edge, and successive data are available at the rising edge of SCLK. When FS is used (FS = 0 at the falling edge of $\overline{CS}$), the MSB (D15) is presented to SDO after the falling edge of $\overline{CS}$ and FS = 0 is detected. Successive data are available at the falling edge of SCLK. (This is typically used with an active FS from a DSP.) For conversion and FIFO read cycles, the first 12 bits are result from previous conversion (data) followed by 4 don't care bits. The first four bits from SDO for CFR read cycles should be ignored. The register content is in the last 12 bits. SDO is 3-state (float) after the 16th bit.
REFM	14	18	I	External reference input or internal reference decoupling.
REFP	15	19	I	External reference input or internal reference decoupling. (Shunt capacitors of 10 μF and 0.1 μF between REFP and REFM.) The maximum input voltage range is determined by the difference between the voltage applied to this terminal and the REFM terminal when an external reference is used.
V_{CC}	5	5	I	Positive supply voltage

detailed description

analog inputs and internal test voltages

The 4/8 analog inputs and three internal test inputs are selected by the analog multiplexer depending on the command entered. The input multiplexer is a break-before-make type to reduce input-to-input noise injection resulting from channel switching.

converter

The TLV2544/48 uses a 12-bit successive approximation ADC utilizing a charge redistribution DAC. Figure 1 shows a simplified version of the ADC.

The sampling capacitor acquires the signal on Ain during the sampling period. When the conversion process starts, the SAR control logic and charge redistribution DAC are used to add and subtract fixed amounts of charge from the sampling capacitor to bring the comparator into a balanced condition. When the comparator is balanced, the conversion is complete and the ADC output code is generated.

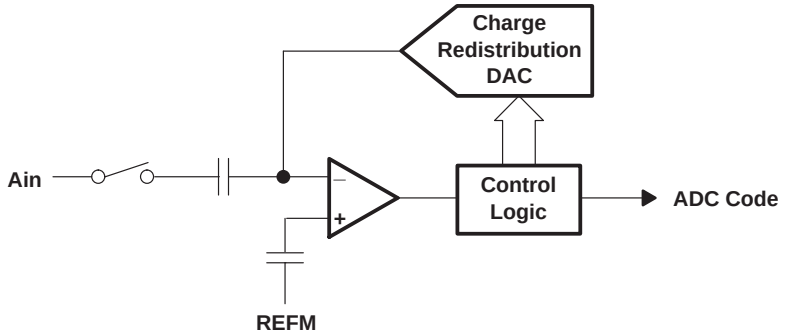

Figure 1. Simplified Model of the Successive-Approximation System

detailed description (continued)

serial interface

INPUT DATA FORMAT	
MSB	**LSB**
D15−D12	D11−D0
Command	Configuration data field

Input data is binary. All trailing blanks can be filled with zeros.

OUTPUT DATA FORMAT READ CFR	
MSB	**LSB**
D15−D12	D11−D0
Don't care	Register content

OUTPUT DATA FORMAT CONVERSION/READ FIFO	
MSB	**LSB**
D15−D4	D3−D0
Conversion result	Don't care

The output data format is binary (unipolar straight binary).

binary

Zero scale code = 000h, Vcode = VREFM
Full scale code = FFFh, Vcode = VREFP − 1 LSB

control and timing

power up and initialization requirements

- Determine processor type by writing A000h to the TLV2544/48 ($\overline{CS}$ must be toggled)
- Configure the device ($\overline{CS}$ must make a high-to-low transition, then can be held low if in DSP mode; i.e., active FS.)

The first conversion after power up or resuming from power down is not valid.

start of the cycle:

- When FS is not used (FS = 1 at the falling edge of $\overline{CS}$), the falling edge of $\overline{CS}$ is the start of the cycle.
- When FS is used (FS is an active signal from a DSP), the falling edge of FS is the start of the cycle.

first 4-MSBs: the command register (CMR)

The TLV2544/TLV2548 have a 4-bit command set (see Table 1) plus a 12-bit configuration data field. Most of the commands require only the first 4 MSBs, i.e., without the 12-bit data field.

NOTE:

The device requires a write CFR (configuration register) with 000h data (write A000h to the serial input) at power up to initialize host select mode.

The valid commands are listed in Table 1.

Table 1. TLV2544/TLV2548 Command Set

SDI D(15−12) BINARY		TLV2548 COMMAND	TLV2544 COMMAND
0000b	0h	Select analog input channel 0	Select analog input channel 0
0001b	1h	Select analog input channel 1	N/A
0010b	2h	Select analog input channel 2	Select analog input channel 1
0011b	3h	Select analog input channel 3	N/A
0100b	4h	Select analog input channel 4	Select analog input channel 2
0101b	5h	Select analog input channel 5	N/A
0110b	6h	Select analog input channel 6	Select analog input channel 3
0111b	7h	Select analog input channel 7	N/A
1000b	8h	SW power down (analog + reference)	
1001b	9h	Read CFR register data shown as SDO D(11−0)	
1010b	Ah plus data	Write CFR followed by 12-bit data, e.g., 0A100h means external reference, short sampling, SCLK/4, single shot, $\overline{\text{INT}}$	
1011b	Bh	Select test, voltage = (REFP+REFM)/2	
1100b	Ch	Select test, voltage = REFM	
1101b	Dh	Select test, voltage = REFP	
1110b	Eh	FIFO read, FIFO contents shown as SDO D(15−4), D(3−0) = 0000	
1111b	Fh plus data	Reserved	

configuration

Configuration data is stored in one 12-bit configuration register (CFR) (see Table 2 for CFR bit definitions). Once configured after first power up, the information is retained in the H/W or S/W power down state. When the device is being configured, a write CFR cycle is issued by the host processor. This is a 16-bit write. If the SCLK stops after the first 8 bits are entered, then the next eight bits can be taken after the SCLK is resumed. The status of the CFR can be read with a read CFR command when the device is programmed for one-shot conversion mode (CFR D[6,5] = 00).

control and timing (continued)

Table 2. TLV2544/TLV2548 Configuration Register (CFR) Bit Definitions

BIT	DEFINITION	
D11	Reference select 0: External 1: internal	
D10	Internal reference voltage select 0: Internal ref = 4 V 1: internal ref = 2 V	
D9	Sample period select 0: Short sampling 12 SCLKs (1x sampling time) 1: Long sampling 24 SCLKs (2x sampling time)	
D(8−7)	Conversion clock source select 00: Conversion clock = internal OSC 01: Conversion clock = SCLK 10: Conversion clock = SCLK/4 11: Conversion clock = SCLK/2	
D(6,5)	Conversion mode select 00: Single shot mode [FIFO not used, D(1,0) has no effect.] 01: Repeat mode 10: Sweep mode 11: Repeat sweep mode	
D(4,3)†	**TLV2548**	**TLV2544**
	Sweep auto sequence select 00: 0−1−2−3−4−5−6−7 01: 0−2−4−6−0−2−4−6 10: 0−0−2−2−4−4−6−6 11: 0−2−0−2−0−2−0−2	Sweep auto sequence select 00: N/A 01: 0−1−2−3−0−1−2−3 10: 0−0−1−1−2−2−3−3 11: 0−1−0−1−0−1−0−1
D2	EOC/$\overline{\text{INT}}$ − pin function select 0: Pin used as $\overline{\text{INT}}$ 1: Pin used as EOC	
D(1,0)	FIFO trigger level (sweep sequence length) 00: Full ($\overline{\text{INT}}$ generated after FIFO level 7 filled) 01: 3/4 ($\overline{\text{INT}}$ generated after FIFO level 5 filled) 10: 1/2 ($\overline{\text{INT}}$ generated after FIFO level 3 filled) 11: 1/4 ($\overline{\text{INT}}$ generated after FIFO level 1 filled)	

† These bits only take effect in conversion modes 10 and 11.

sampling

The sampling period starts after the first 4 input data are shifted in if they are decoded as one of the conversion commands. These are select analog input (channel 0 through 7) and select test (channel 1 through 3).

normal sampling

When the converter is using normal sampling, the sampling period is programmable. It can be 12 SCLKs (short sampling) or 24 SCLKs (long sampling). Long sampling helps when SCLK is faster than 10 MHz or when input source resistance is high.

extended sampling

$\overline{\text{CSTART}}$ − An asynchronous (to the SCLK) signal, via dedicated hardware pin, $\overline{\text{CSTART}}$, can be used in order to have total control of the sampling period and the start of a conversion. This extended sampling is user-defined and is totally independent of SCLK. While $\overline{\text{CS}}$ is high, the falling edge of $\overline{\text{CSTART}}$ is the start of the sampling period and is controlled by the low time of $\overline{\text{CSTART}}$. The minimum low time for $\overline{\text{CSTART}}$ should be at least equal to the minimum $t_{(SAMPLE)}$. In a select cycle used in mode 01 (REPEAT MODE), $\overline{\text{CSTART}}$ can be started as soon as the channel is selected (after the fifth SCLK). In this case the sampling period is not started until $\overline{\text{CS}}$ has become inactive. Therefore the nonoverlapped $\overline{\text{CSTART}}$ low time must meet the minimum sampling time requirement. The low-to-high transition of $\overline{\text{CSTART}}$ terminates the sampling period and starts the conversion period. The conversion clock can also be configured to use either internal OSC or external SCLK. This function is useful for an application that requires:

- The use of an extended sampling period to accommodate different input source impedance
- The use of a faster I/O clock on the serial port but not enough sampling time is available due to the fixed number of SCLKs. This could be due to a high input source impedance or due to higher MUX ON resistance at lower supply voltage.

Once the conversion is complete, the processor can initiate a read cycle by using either the read FIFO command to read the conversion result or by simply selecting the next channel number for conversion. Since the device has a valid conversion result in the output buffer, the conversion result is simply presented at the serial data output. To completely get out of the extended sampling mode, $\overline{\text{CS}}$ must be toggled twice from a high-to-low transition while $\overline{\text{CSTART}}$ is high. The read cycle mentioned above followed by another configuration cycle of the ADC qualifies this condition and will successfully put the ADC back to its normal sampling mode. This can be viewed in Figure 9.

Table 3. Sample and Convert Conditions

	CONDITIONS	SAMPLE	CONVERT
$\overline{\text{CSTART}}$	$\overline{\text{CS}}$ = 1	**No sampling clock (SCLK) required.** Sampling period is totally controlled by the low time of $\overline{\text{CSTART}}$. The high-to-low transition of $\overline{\text{CSTART}}$ (when CS=1) starts the sampling of the analog input signal. The low time of $\overline{\text{CSTART}}$ dictates the sampling period. The low-to-high transition of $\overline{\text{CSTART}}$ ends sampling period and begins the conversion cycle. (Note: this trigger only works when internal reference is selected for conversion modes 01, 10, and 11.)	1) If internal clock OSC is selected a minimum of 3 MHz (equivalent to 4.6 µs conversion speed) can be achieved. 2) If external SCLK is selected, conversion time is $t_{conv} = 14 \times DIV/f_{(SCLK)}$, where DIV can be 1, 2, or 4.
$\overline{\text{CS}}$	$\overline{\text{CSTART}}$ = 1 FS = 1	**SCLK is required.** Sampling period is programmable under normal sampling. When programmed to sample under short sampling, 12 SCLKs are generated to complete sampling period. 24 SCLKs are generated when programmed for long sampling. A command set to configure the device requires 4 SCLKs thereby extending to 16 or 28 SCLKs respectively before conversion takes place. (Note: Because the ADC only bypasses a valid channel select command, the user can use *select channel 0, 0000b,* as the SDI input when either $\overline{\text{CS}}$ or FS is used as trigger for conversion. The ADC responds to commands such as SW power-down, 1000b.)	
FS	$\overline{\text{CSTART}}$ = 1 $\overline{\text{CS}}$ = 0		

TLV2544/TLV2548 conversion modes

The TLV2544 and TLV2548 have four different conversion modes (mode 00, 01, 10, 11). The operation of each mode is slightly different, depending on how the converter performs the sampling and which host interface is used. The trigger for a conversion can be an active $\overline{\text{CSTART}}$ (extended sampling), $\overline{\text{CS}}$ (normal sampling, SPI interface), or FS (normal sampling, TMS320 DSP interface). When FS is used as the trigger, $\overline{\text{CS}}$ can be held active, i.e. $\overline{\text{CS}}$ does not need to be toggled through the trigger sequence. SDI can be one of the channel select commands, such as SELECT CHANNEL 0. Different types of triggers should not be mixed throughout the repeat and sweep operations. When $\overline{\text{CSTART}}$ is used as the trigger, the conversion starts on the rising edge of $\overline{\text{CSTART}}$. The minimum low time for $\overline{\text{CSTART}}$ is equal to $t_{(SAMPLE)}$. If an active $\overline{\text{CS}}$ or FS is used as the trigger, the conversion is started after the 16th or 28th SCLK edge. Enough time (for conversion) should be allowed between consecutive triggers so that no conversion is terminated prematurely.

one shot mode (mode 00)

One shot mode (mode 00) does not use the FIFO, and the EOC is generated as the conversion is in progress (or $\overline{\text{INT}}$ is generated after the conversion is done).

repeat mode (mode 01)

Repeat mode (mode 01) uses the FIFO. This mode setup requires configuration cycle and channel select cycle. Once the programmed FIFO threshold is reached, the FIFO must be read, or the data is lost when the sequence starts over again with the SELECT cycle and series of triggers. No configuration is required except for reselecting the channel unless the operation mode is changed. This allows the host to set up the converter and continue monitoring a fixed input and come back to get a set of samples when preferred.

Triggered by $\overline{\text{CSTART}}$: The first conversion can be started with a select cycle or $\overline{\text{CSTART}}$. To do so, the user can issue $\overline{\text{CSTART}}$ during the select cycle, immediately after the four-bit channel select command. The first sample started as soon as the select cycle is finished (i.e., $\overline{\text{CS}}$ returns to 1). If there is enough time (2 μs) left between the SELECT cycle and the following $\overline{\text{CSTART}}$, a conversion is carried out. In this case, you will need one less trigger to fill the FIFO. Succeeding samples are triggered by $\overline{\text{CSTART}}$.

sweep mode (mode 10)

Sweep mode (mode 10) also uses the FIFO. Once it is programmed in this mode, all of the channels listed in the selected sweep sequence are visited in sequence. The results are converted and stored in the FIFO. This sweep sequence may not be completed if the FIFO threshold is reached before the list is completed. This allows the system designer to change the sweep sequence length. Once the FIFO has reached its programmed threshold, an interrupt ($\overline{\text{INT}}$) is generated. The host must issue a read FIFO command to read and clear the FIFO before the next sweep can start.

repeat sweep mode (mode 11)

Repeat sweep mode (mode 11) works the same way as mode 10 except the operation has an option to continue even if the FIFO threshold is reached. Once the FIFO has reached its programmed threshold, an interrupt ($\overline{\text{INT}}$) is generated. Then two things may happen:

1. The host may choose to act on it (read the FIFO) or ignore it. If the next cycle is a read FIFO cycle, all of the data stored in the FIFO is retained until it has been read in order.
2. If the next cycle is not a read FIFO cycle, or another $\overline{\text{CSTART}}$ is generated, all of the content stored in the FIFO is cleared before the next conversion result is stored in the FIFO, and the sweep is continued.

TLV2544/TLV2548 conversion modes (continued)

Table 4. TLV2544/TLV2548 Conversion Mode

CONVERSION MODE	CFR D(6,5)	SAMPLING TYPE	OPERATION
One shot	00	Normal	• Single conversion from a selected channel • $\overline{CS}$ or $\overline{FS}$ to start select/sampling/conversion/read • One $\overline{INT}$ or EOC generated after each conversion • Host must serve $\overline{INT}$ by selecting channel, and converting and reading the previous output.
		Extended	• Single conversion from a selected channel • $\overline{CS}$ to select/read • $\overline{CSTART}$ to start sampling and conversion • One $\overline{INT}$ or EOC generated after each conversion • Host must serve $\overline{INT}$ by selecting next channel and reading the previous output.
Repeat	01	Normal	• Repeated conversions from a selected channel • $\overline{CS}$ or $\overline{FS}$ to start sampling/conversion • One $\overline{INT}$ generated after FIFO is filled up to the threshold • Host must serve $\overline{INT}$ by either 1) (FIFO read) reading out all of the FIFO contents up to the threshold, then repeat conversions from the same selected channel or 2) writing another command(s) to change the conversion mode. If the FIFO is not read when $\overline{INT}$ is served, it is cleared.
		Extended	• Same as normal sampling except $\overline{CSTART}$ starts each sampling and conversion when $\overline{CS}$ is high.
Sweep	10	Normal	• One conversion per channel from a sequence of channels • $\overline{CS}$ or $\overline{FS}$ to start sampling/conversion • One $\overline{INT}$ generated after FIFO is filled up to the threshold • Host must serve $\overline{INT}$ by (FIFO read) reading out all of the FIFO contents up to the threshold, then write another command(s) to change the conversion mode.
		Extended	• Same as normal sampling except $\overline{CSTART}$ starts each sampling and conversion when $\overline{CS}$ is high.
Repeat sweep	11	Normal	• Repeated conversions from a sequence of channels • $\overline{CS}$ or $\overline{FS}$ to start sampling/conversion • One $\overline{INT}$ generated after FIFO is filled up to the threshold • Host must serve $\overline{INT}$ by either 1) (FIFO read) reading out all of the FIFO contents up to the threshold, then repeat conversions from the same selected channel or 2) writing another command(s) to change the conversion mode. If the FIFO is not read when $\overline{INT}$ is served it is cleared.
		Extended	• Same as normal sampling except $\overline{CSTART}$ starts each sampling and conversion when $\overline{CS}$ is high.

NOTES: 1. Programming the EOC/$\overline{INT}$ pin as the EOC signal works for mode 00 only. The other three modes automatically generate an $\overline{INT}$ signal irrespective of how EOC/$\overline{INT}$ is programmed.
2. When using $\overline{CSTART}$ to sample in extended mode, the falling edge of the next $\overline{CSTART}$ trigger should occur no more than 2.5 μs after the falling $\overline{CS}$ edge (or falling FS edge if FS is active) of the channel select cycle. This is to prevent an ongoing conversion from being canceled.

timing diagrams

The timing diagrams can be categorized into two major groups: nonconversion and conversion. The nonconversion cycles are read and write (configuration). None of these cycles carry a conversion. Conversion cycles are those four modes of conversion.

read cycle (read FIFO or read CFR)

read CFR cycle:

The read command is decoded in the first 4 clocks. SDO outputs the contents of the CFR after the 4th SCLK.

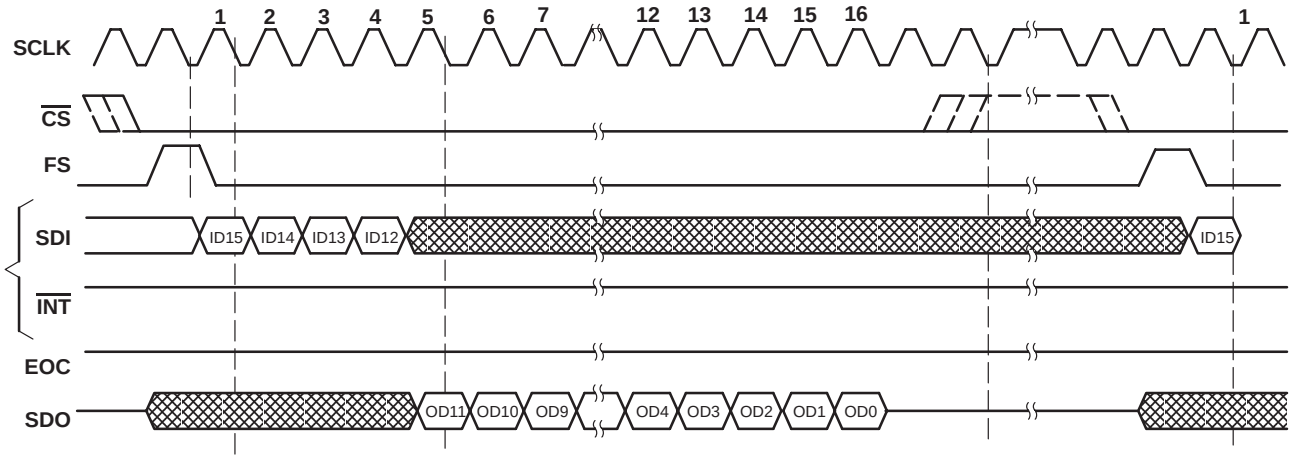

Figure 2. TLV2544/TLV2548 Read CFR Cycle (FS active)

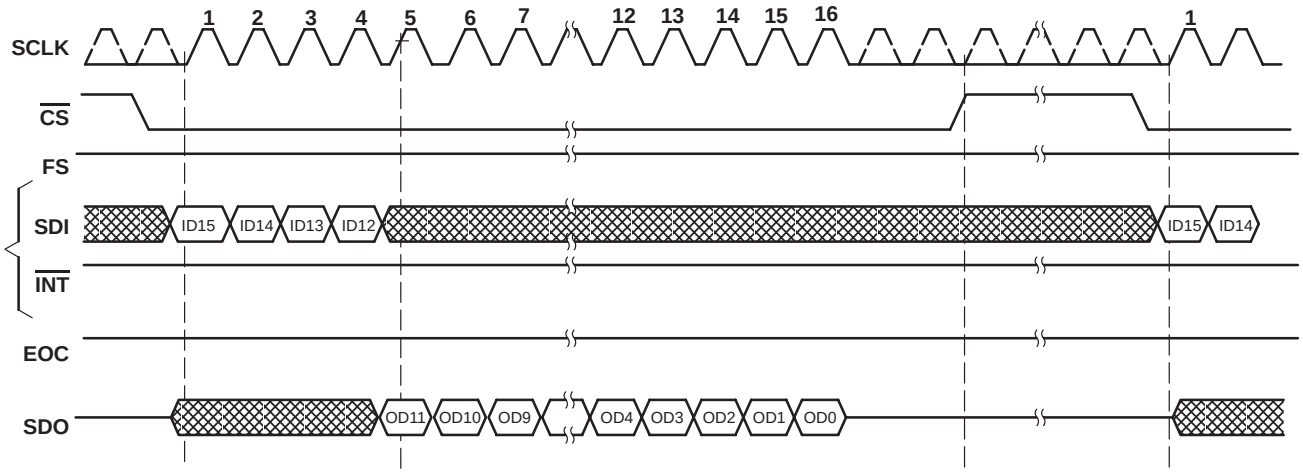

Figure 3. TLV2544/TLV2548 Read CFR Cycle (FS = 1)

read cycle (read FIFO or read CFR) (continued)

FIFO read cycle

The first command in the active cycle after $\overline{\text{INT}}$ is generated, if the FIFO is used, is assumed as the FIFO read command. The first FIFO content is output immediately before the command is decoded. If this command is not a FIFO read, then the output is terminated but the first data in the FIFO is retained until a valid FIFO read command is decoded. Use of more layers of the FIFO reduces the time taken to read multiple data. This is because the read cycle does not generate EOC or $\overline{\text{INT}}$, nor does it carry out any conversion.

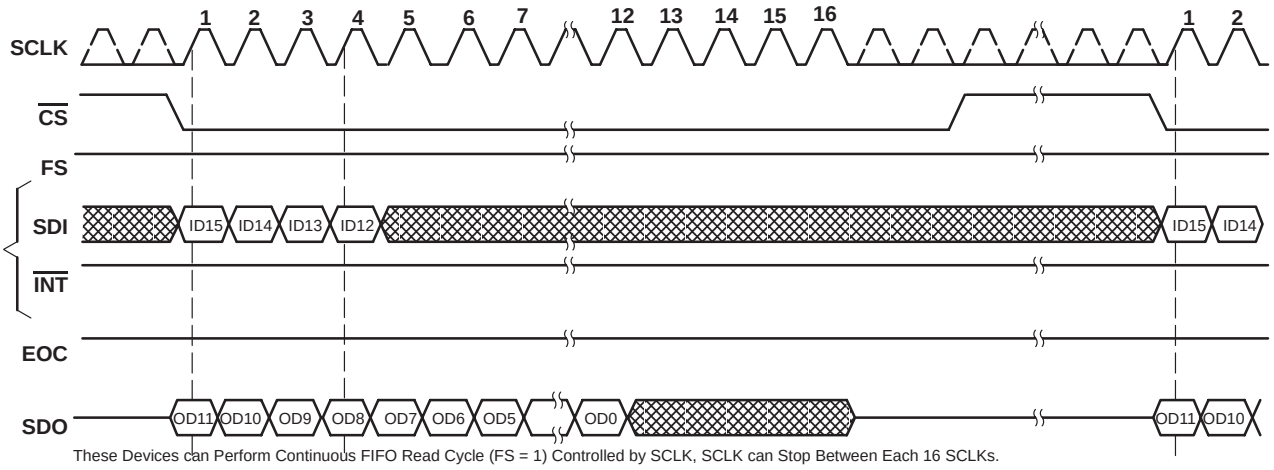

Figure 4. TLV2544/TLV2548 FIFO Read Cycle (FS = 1)

write cycle (write CFR)

The write cycle is used to write to the configuration register CFR (with 12-bit register content). The write cycle does not generate an EOC or $\overline{\text{INT}}$, nor does it carry out any conversion (see power up and initialization requirements).

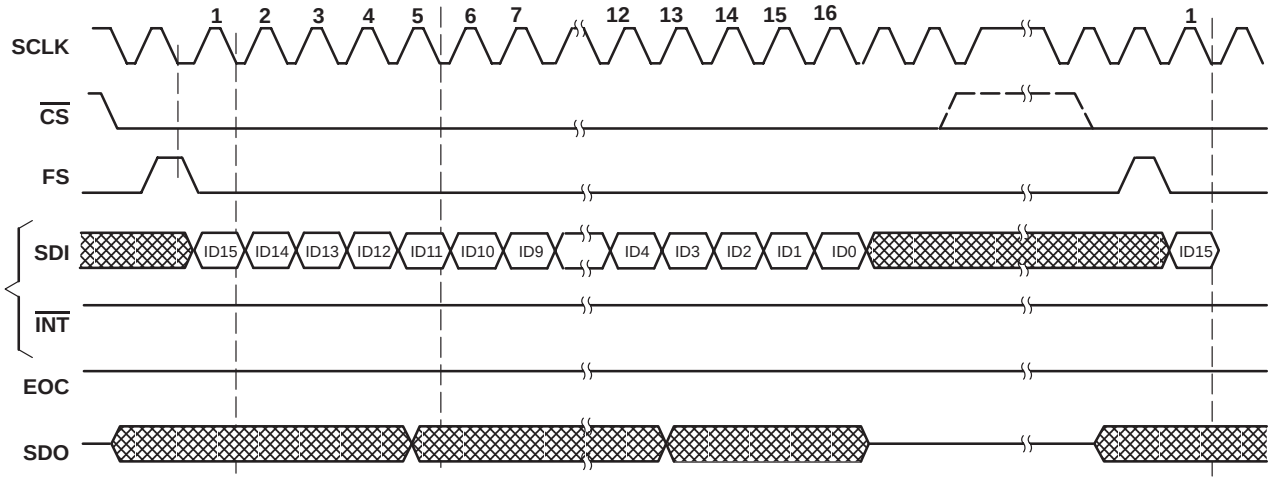

Figure 5. TLV2544/TLV2548 Write Cycle (FS Active)

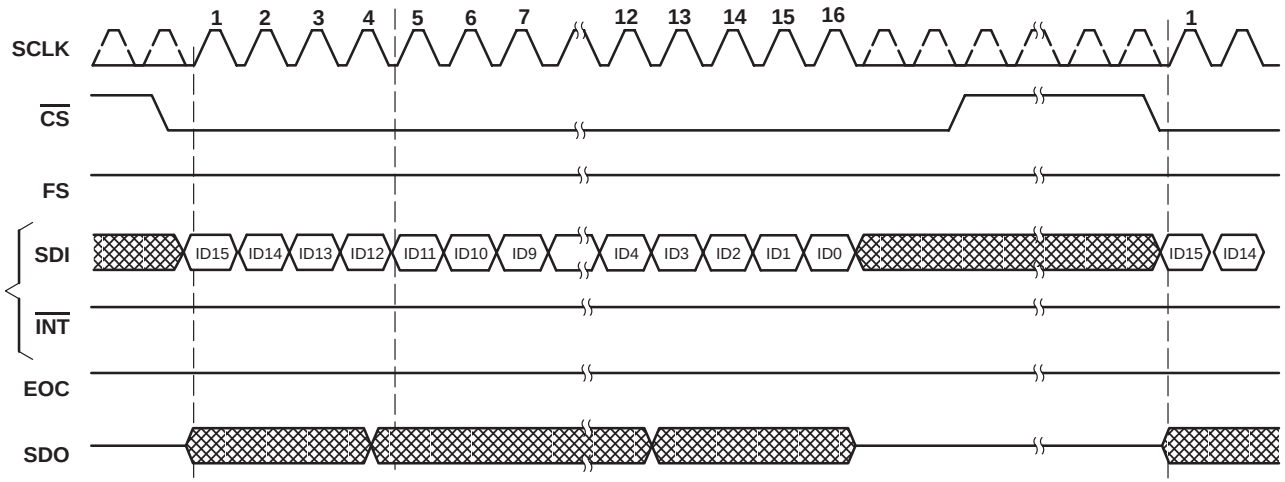

Figure 6. TLV2544/TLV2548 Write Cycle (FS = 1)

conversion cycles

DSP/normal sampling

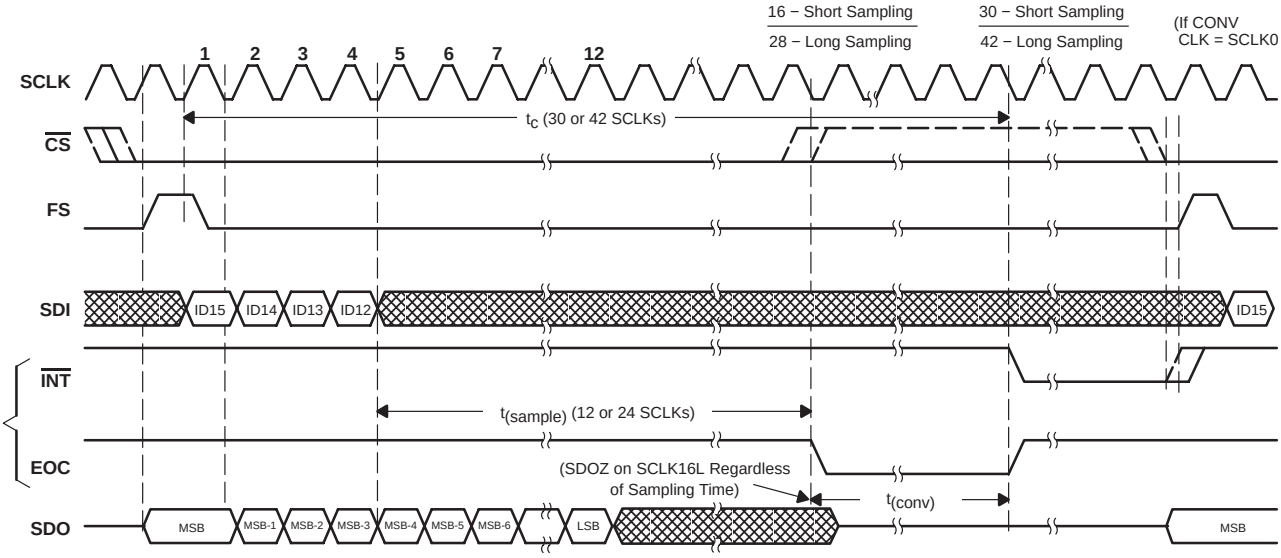

Figure 7. Mode 00 Single Shot/Normal Sampling (FS Signal Used)

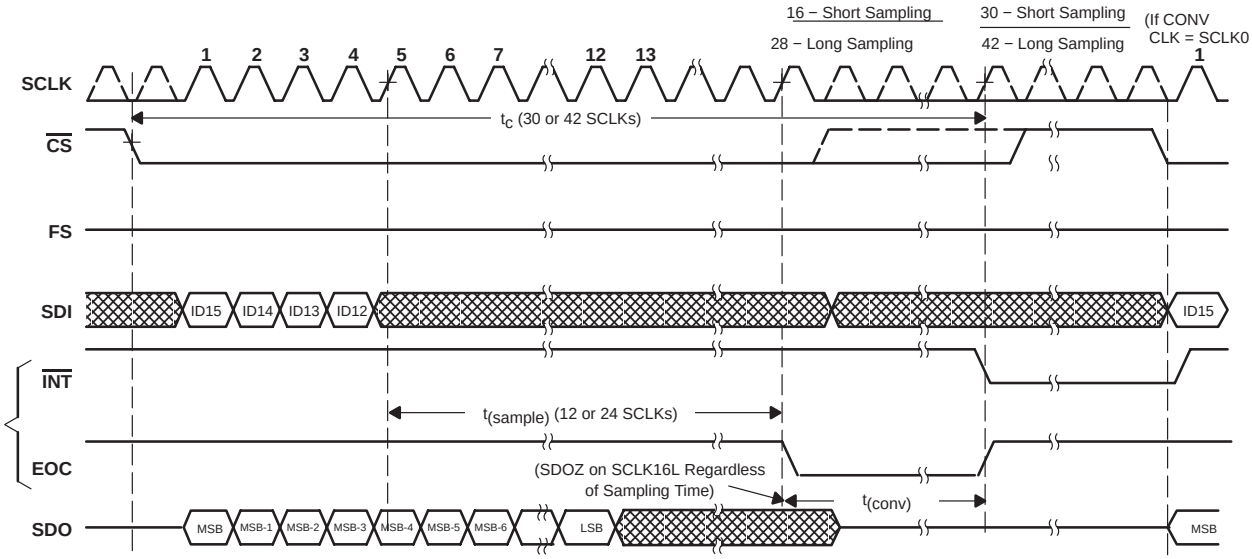

Figure 8. Mode 00 Single Shot/Normal Sampling (FS = 1, FS Signal not Used)

conversion cycles (continued)

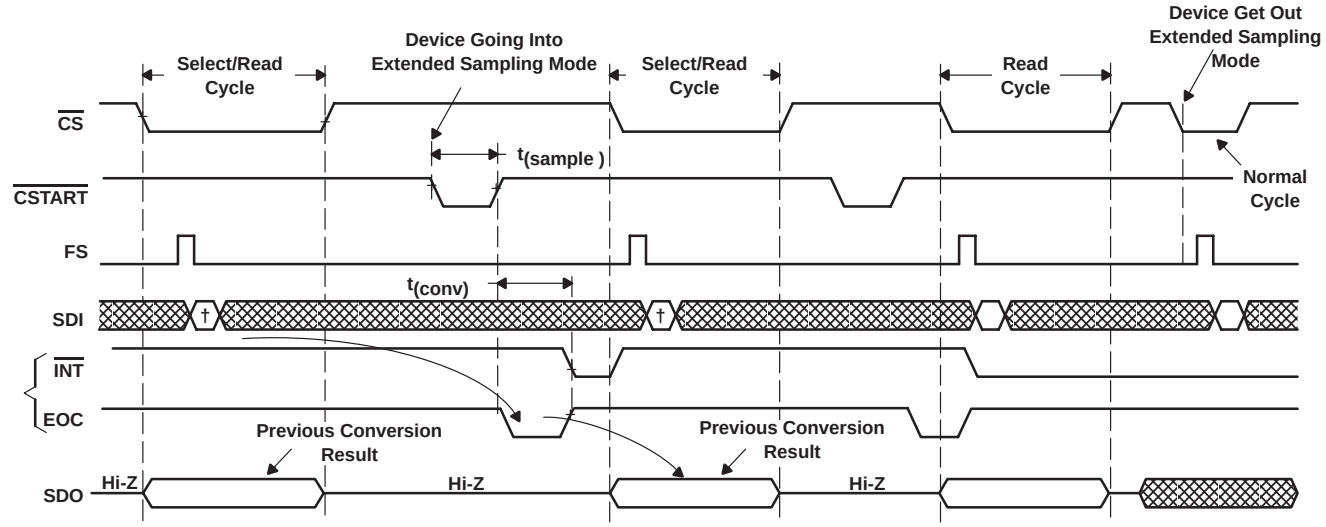

† This is one of the single shot commands. Conversion starts on next rising edge of $\overline{\text{CSTART}}$.

Figure 9. Mode 00 Single Shot/Extended Sampling (FS Signal Used, FS Pin Connected to TMS320 DSP)

modes using the FIFO: modes 01, 10, 11 timing

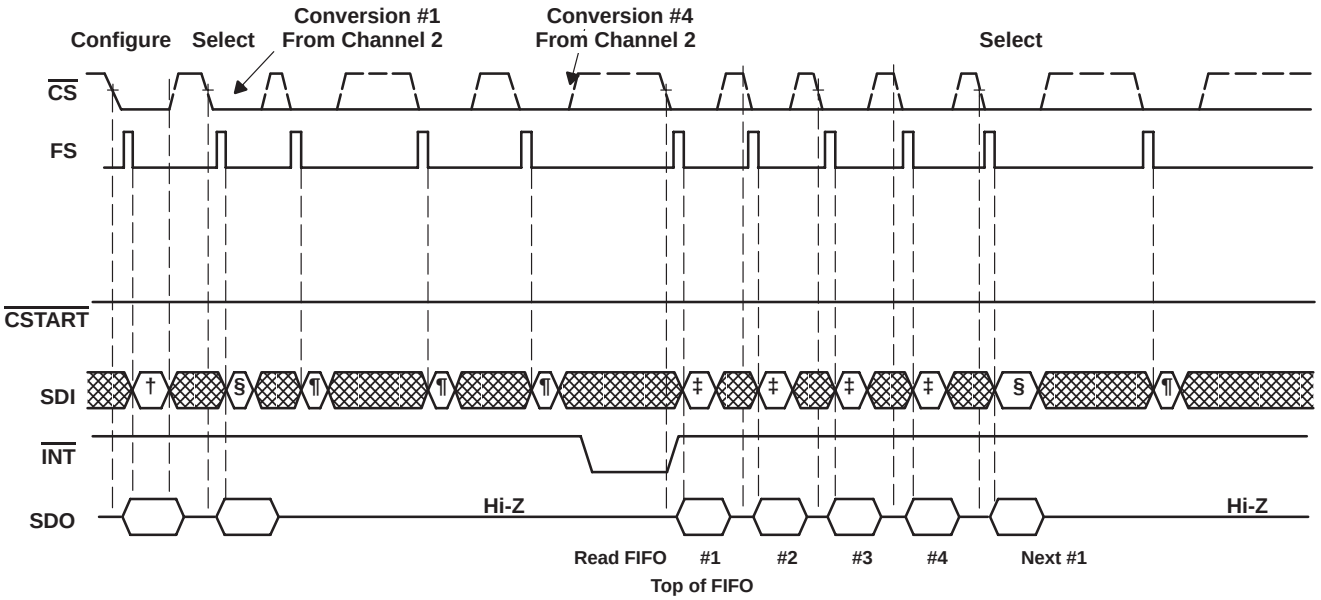

† Command = Configure write for mode 01, FIFO threshold = 1/2
‡ Command = Read FIFO, 1st FIFO read
§ Command = Select ch2.
¶ Use any channel select command to trigger SDI input.

Figure 10. TLV2544/TLV2548 Mode 01 DSP Serial Interface (Conversions Triggered by FS)

modes using the FIFO: modes 01, 10, 11 timing (continued)

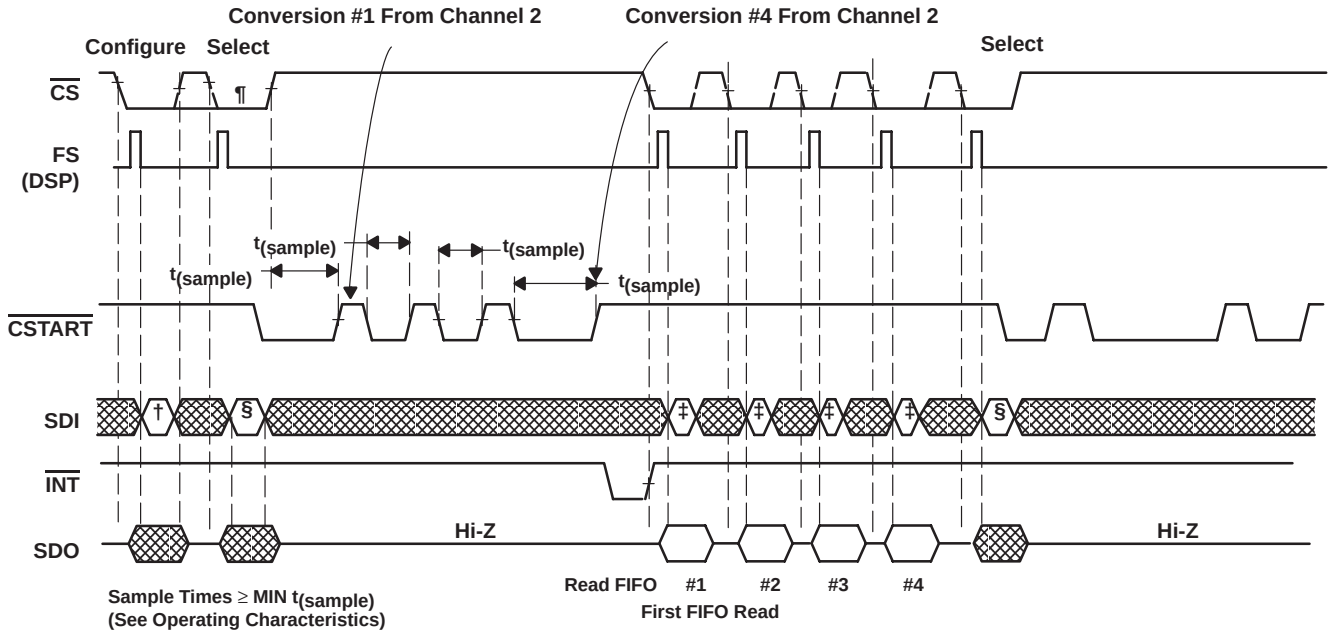

† Command = Configure write for mode 01, FIFO threshold = 1/2
‡ Command = Read FIFO, 1st FIFO read
§ Command = Select ch2.
¶ Minimum $\overline{CS}$ low time for select cycle is 6 SCLKs. The same amount of time is required between FS low to $\overline{CSTART}$ for proper channel decoding. The low time of $\overline{CSTART}$, not overlapped with $\overline{CS}$ low time, is the valid sampling time for the select cycle (see Figure 18).

Figure 11. TLV2544/TLV2548 Mode 01 µp/DSP Serial Interface (Conversions Triggered by $\overline{CSTART}$)

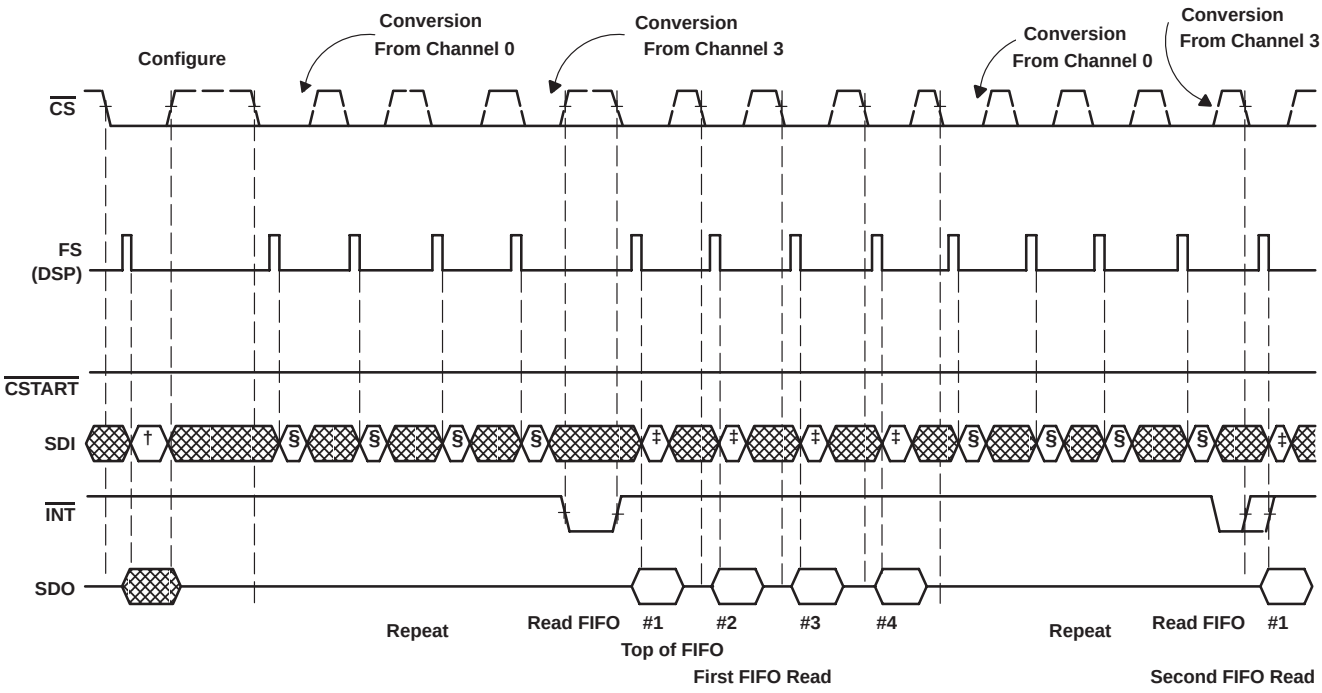

† Command = Configure write for mode 10 or 11, FIFO threshold = 1/2, sweep seq = 0−1−2−3.
‡ Command = Read FIFO
§ Use any channel select command to trigger SDI input.

Figure 12. TLV2544/TLV2548 Mode 10/11 DSP Serial Interface (Conversions Triggered by FS)

modes using the FIFO: modes 01, 10, 11 timing (continued)

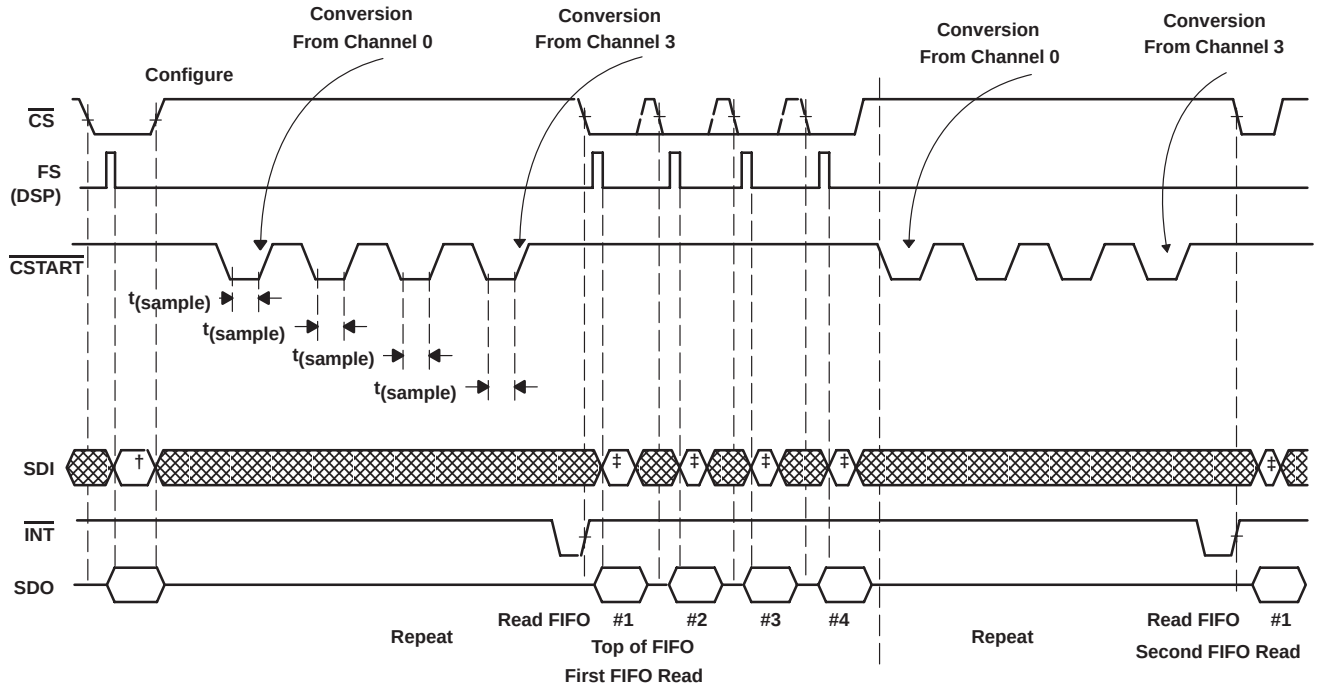

† Command = Configure write for mode 10 or 11, FIFO threshold = 1/2, sweep seq = 0−1−2−3.
‡ Command = Read FIFO

Figure 13. TLV2544/TLV2548 Mode 10/11 DSP Serial Interface (Conversions Triggered by $\overline{\text{CSTART}}$)

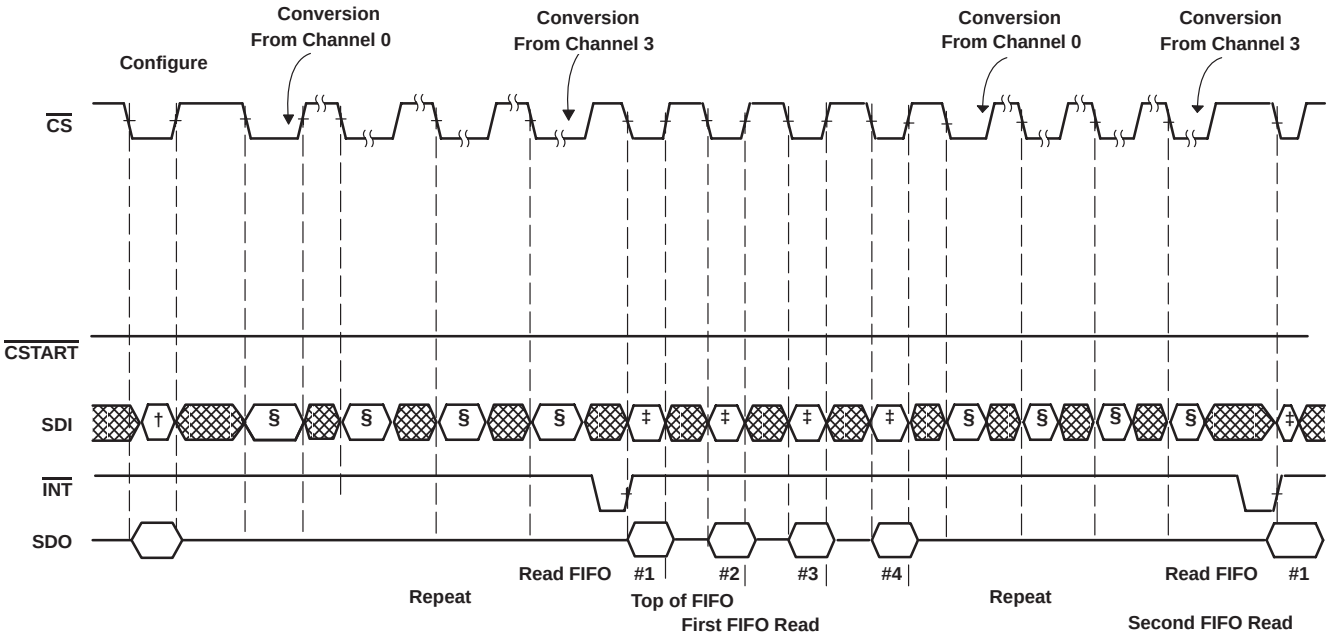

† Command = Configure write for mode 10 or 11, FIFO threshold = 1/2, sweep seq = 0−1−2−3.
‡ Command = Read FIFO
§ Use any channel select command to trigger SDI input.

Figure 14. TLV2544/TLV2548 Mode 10/11 µp Serial Interface (Conversions Triggered by $\overline{\text{CS}}$)

FIFO operation

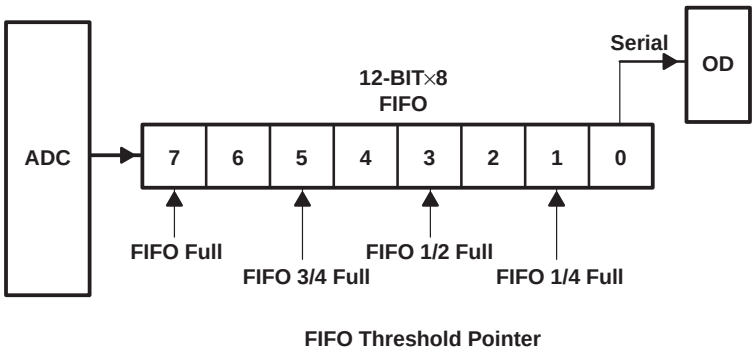

Figure 15. TLV2544/TLV2548 FIFO

The device has an 8-layer FIFO that can be programmed for different thresholds. An interrupt is sent to the host after the preprogrammed threshold is reached. The FIFO can be used to store data from either a fixed channel or a series of channels based on a preprogrammed sweep sequence. For example, an application may require eight measurements from channel 3. In this case, the FIFO is filled with eight data sequentially taken from channel 3. Another application may require data from channel 0, channel 2, channel 4, and channel 6 in an orderly manner. Therefore, the threshold is set for 1/2 and the sweep sequence 0−2−4−6−0−2−4−6 is chosen. An interrupt is sent to the host as soon as all four data are in the FIFO.

In single shot mode, the FIFO automatically uses a 1/8 FIFO depth. Therefore the CFR bits (D1,0) controlling FIFO depth are *don't care*.

SCLK and conversion speed

There are two ways to adjust the conversion speed.

- The SCLK can be used as the source of the conversion clock.

  The onboard OSC is approximately 4 MHz and 14 conversion clocks are required to complete a conversion. (Corresponding 3.5 μs conversion time) The devices can operate with an SCLK up to 20 MHz for the supply voltage range specified. When a more accurate conversion time is desired, the SCLK can be used as the source of the conversion clock. The clock divider provides speed options appropriate for an application where a high speed SCLK is used for faster I/O. The total conversion time is $14 \times (DIV/f_{SCLK})$ where DIV is 1, 2, or 4. For example a 20 MHz SCLK with the divide by 4 option produces a $\{14 \times (4/20\ M)\} = 2.8$ μs conversion time. When an external serial clock (SCLK) is used as the source of the conversion clock, the maximum equivalent conversion clock (f_{SCLK}/DIV) should not exceed 6 MHz.

- Autopower down can be used. This mode is always on. If the device is not accessed (by $\overline{CS}$ or $\overline{CSTART}$), the converter is powered down to save power. The built-in reference is left on in order to quickly resume operation within one half SCLK period. This provides unlimited choices to trade speed with power savings.

reference voltage

The device has a built-in reference with a programmable level of 2 V or 4 V. If the internal reference is used, REFP is set to 2 V or 4 V and REFM is set to 0 V. An external reference can also be used through two reference input pins, REFP and REFM, if the reference source is programmed as external. The voltage levels applied to these pins establish the upper and lower limits of the analog inputs to produce a full-scale and zero-scale reading respectively. The values of REFP, REFM, and the analog input should not exceed the positive supply or be lower than GND consistent with the specified absolute maximum ratings. The digital output is at full scale when the input signal is equal to or higher than REFP and at zero when the input signal is equal to or lower than REFM.

reference block equivalent circuit

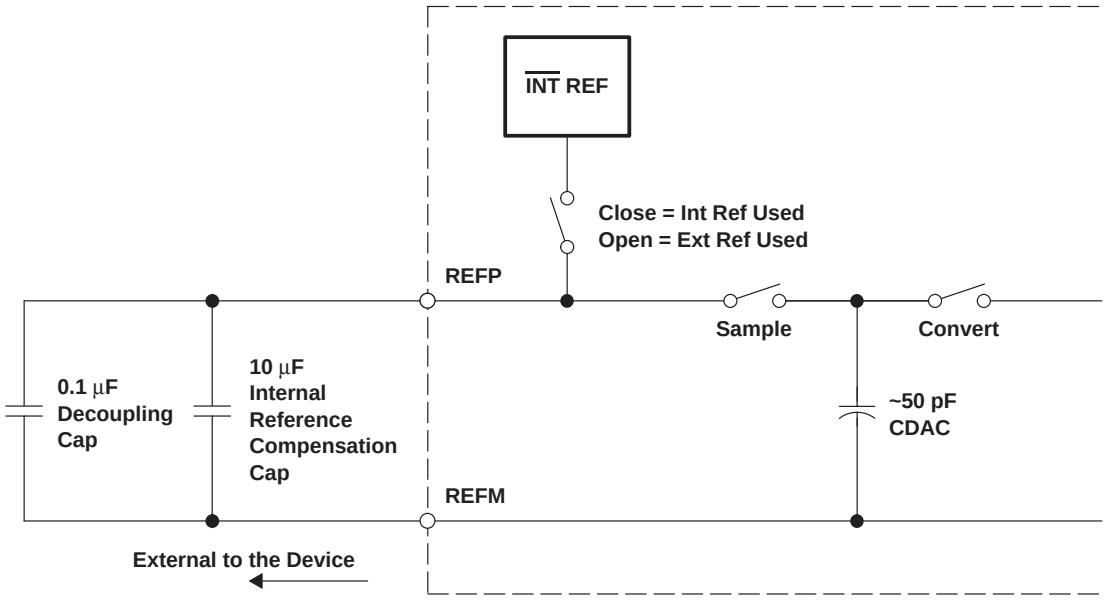

NOTES: A. If internal reference is used, tie REFM to AGND and install a 10 μF (or 4.7 μF) internal reference compensation capacitor between REFP and REFM to store the charge as shown in the figure above.

B. If external reference is used, the 10 μF (internal reference compensation) capacitor is optional. REFM can be connected to external REFM or AGND.

C. Internal reference voltage drift, due to temperature variations, is approximately ±10 mV about the nominal 2 V (typically) from −10°C to 100°C . The nominal value also varies approximately ±50 mV across devices.

D. Internal reference leakage during low ON time: Leakage resistance is on the order of 100 MΩ or more. This means the time constant is about 1000 s with 10 μF compensation capacitance. Since the REF voltage does not vary much, the reference will come up quickly after resuming from auto power down. At power up and power down the internal reference sees a glitch of about 500 μV when 2 V internal reference is used (1 mV when 4 V internal reference is used). This glitch settles out after about 50 μs.

power down

Writing 8000h to the device puts the device into a software power down state. For a hardware power-down, the dedicated $\overline{\text{PWDN}}$ pin provides another way to power down the device asynchronously. These two power-down modes power down the entire device including the built-in reference to save power. It requires 20 ms to resume from either a software or hardware power down.

Auto power-down mode is always enabled. This mode maintains the built-in reference if an internal reference is used so resumption is fast enough to be used between cycles.

The configuration register is not affected by any of the power down modes but the sweep operation sequence has to be started over again. All FIFO contents are cleared by the power-down modes.

absolute maximum ratings over operating free-air temperature (unless otherwise noted)†

Supply voltage range, GND to V_{CC} . . . . . −0.3 V to 6.5 V
Analog input voltage range . . . . . −0.3 V to V_{CC} + 0.3 V
Reference input voltage . . . . . V_{CC} + 0.3 V
Digital input voltage range . . . . . −0.3 V to V_{CC} + 0.3 V
Operating virtual junction temperature range, T_J . . . . . −55°C to 150°C
Operating free-air temperature range, T_A: TLV2544/48Q . . . . . −40°C to 125°C
TLV2548M . . . . . −55°C to 125°C
Storage temperature range, T_{stg} . . . . . −65°C to 150°C
Lead temperature 1,6 mm (1/16 inch) from case for 10 seconds . . . . . 260°C

† Stresses beyond those listed under “absolute maximum ratings” may cause permanent damage to the device. These are stress ratings only, and functional operation of the device at these or any other conditions beyond those indicated under “recommended operating conditions” is not implied. Exposure to absolute-maximum-rated conditions for extended periods may affect device reliability.

DISSIPATION RATING TABLE

PACKAGE	$T_A \le 25°C$ POWER RATING	DERATING FACTOR ABOVE $T_A = 25°C$‡	$T_A = 70°C$ POWER RATING	$T_A = 85°C$ POWER RATING	$T_A = 125°C$ POWER RATING
D	1110 mW	8.9 mW/°C	710 mW	577 mW	222 mW
DW	1294 mW	10.4 mW/°C	828 mW	673 mW	259 mW
FK	1375 mW	11.0 mW/°C	880 mW	715 mW	275 mW

‡ This is the inverse of the traditional junction-to-ambient thermal resistance ($R_{\Theta JA}$). Thermal resistance is not production tested and the values given are for informational purposes only.

recommended operating conditions

			MIN	NOM	MAX	UNIT
Supply voltage, V_{CC}			3	3.3	5.5	V
Analog input voltage (see Note 3)			0		V_{CC}	V
High level control input voltage, V_{IH}			2.1			V
Low-level control input voltage, V_{IL}					0.6	V
Setup time, $t_{su(CS-SCLK)}$ CS falling edge before SCLK rising edge (FS=1) or before SCLK falling edge (when FS is active)	V_{CC} = 4.5 V, SCLK = 20 MHz		20			ns
	V_{CC} = 3 V, SCLK = 20 MHz		30			
Hold time, CS rising edge after SCLK rising edge (FS=1) or after SCLK falling edge (when FS is active), $t_{h(SCLK-CS)}$	V_{CC} = 4.5 V		10			ns
	V_{CC} = 3 V		15			
Delay time, delay from CS falling edge to FS rising edge, $t_{d(CSL-FSH)}$			0.5			SCLKs
Delay time, delay time from 16th SCLK falling edge to CS rising edge (FS is active), $t_{d(SCLK16L-CSH)}$			0.5			SCLKs
Setup time, FS rising edge before SCLK falling edge, $t_{su(FSH-SCLKL)}$			20			ns
Hold time, FS hold high after SCLK falling edge, $t_{h(FSH-SCLKL)}$			30		37	ns
Pulse width, CS high time, $t_{wH(CS)}$			100			ns
Pulse width, FS high time, t_{wH}(FS)			0.75		1	SCLKs
SCLK cycle time, V_{CC} = 3 V to 3.6V, $t_{c(SCLK)}$			67		10000	ns
SCLK cycle time, V_{CC} = 4.5 V to 5.5V, $t_{c(SCLK)}$			50		10000	ns
Pulse width, SCLK low time, $t_{wL(SCLK)}$		V_{CC} = 4.5 V	22			ns
		V_{CC} = 3 V	27			
Pulse width, SCLK high time, $t_{wH(SCLK)}$		V_{CC} = 4.5 V	22			ns
		V_{CC} = 3 V	27			
Setup time, SDI valid before falling edge of SCLK (FS is active) or the rising edge of SCLK (FS=1), $t_{su(DI-SCLK)}$			25			ns
Hold time, SDI hold valid after falling edge of SCLK (FS is active) or the rising edge of SCLK (FS=1), $t_{h(DI-SCLK)}$			5			ns
Delay time, delay from CS falling edge to SDO valid, $t_{d(CSL-DOV)}$					25	ns
Delay time, delay from FS falling edge to SDO valid, $t_{d(FSL-DOV)}$					25	ns
Delay time, delay from SCLK falling edge (FS is active) or SCLK rising edge (FS=1) to SDO valid, $t_{d(SCLK-DOV)}$	V_{CC} = 5.5 V	SDO = 0 pF		0.5 SCLK + 5		ns
		SDO = 60 pF			0.5 SCLK + 24	
	V_{CC} = 3.3 V	SDO = 0 pF		0.5 SCLK + 12		
		SDO = 60 pF			0.5 SCLK + 33	
Delay time, delay from CS rising edge to SDO 3-state, $t_{d(CSH-DOZ)}$				80		ns
Delay time, delay from 17th SCLK rising edge (FS is active) or the 16th falling edge (FS=1) to EOC falling edge, $t_{d(SCLK-EOCL)}$				45		ns
Delay time, delay from 16th SCLK falling edge to $\overline{INT}$ falling edge (FS =1) or from the 17th rising edge SCLK to $\overline{INT}$ falling edge (when FS active), $t_{d(SCLK-INT)}$			Min $t_{(conv)}$			µs
Delay time, delay from CS falling edge to $\overline{INT}$ rising edge, $t_{d(CSL-INTH)}$					50	ns
Delay time, delay from CS rising edge to $\overline{CSTART}$ falling edge, $t_{d(CSH-CSTARTL)}$			100			ns
Delay time, delay from CSTART rising edge to EOC falling edge, $t_{d(CSTARTH-EOCL)}$					50	ns
Pulse width, $\overline{CSTART}$ low time, $t_{wL(\overline{CSTART})}$			Min $t_{(sample)}$			µs

NOTE 3: When binary output format is used, analog input voltages greater than that applied to REFP convert as all ones (111111111111), while input voltages less than that applied to REFM convert as all zeros (000000000000). The device is functional with reference down to 1 V. (VREFP − VREFM − 1); however, the electrical specifications are no longer applicable.

recommended operating conditions (continued)

		MIN	NOM	MAX	UNIT
Delay time, delay from $\overline{CSTART}$ rising edge to $\overline{CSTART}$ falling edge, $t_{d(CSTARTH-CSTARTL)}$		Max $t_{(conv)}$			µs
Delay time, delay from $\overline{CSTART}$ rising edge to $\overline{INT}$ falling edge, $t_{d(CSTARTH-INTL)}$			Max $t_{(conv)}$		µs
Operating free-air temperature, T_A	TLV2544Q/TLV2548Q	−40		125	°C
	TLV2548M	−55		125	

electrical characteristics over recommended operating free-air temperature range, V_{CC} = V_{REFP} = 3 V to 5.5 V, SCLK frequency = 20 MHz at 5 V, 15 MHz at 3 V (unless otherwise noted)

PARAMETER		TEST CONDITIONS		MIN	TYP†	MAX	UNIT
V_{OH}	High-level output voltage	V_{CC} = 5.5 V, I_{OH} = −0.2 mA at 30 pF load		2.4			V
		V_{CC} = 3 V, I_{OH} = -20 µA at 30 pF load		V_{CC}−0.2			
V_{OL}	Low-level output voltage	V_{CC} = 5.5 V, I_{OL} = 0.8 mA at 30 pF load				0.4	V
		V_{CC} = 3 V, I_{OL} = 20 µA at 30 pF load				0.1	
I_{OZ}	Off-state output current (high-impedance-state)	V_O = V_{CC}	$\overline{CS}$ = V_{CC}		1	2.5	µA
I_{OZ}	Off-state output current (high-impedance-state)	V_O = 0	$\overline{CS}$ = V_{CC}	−2.5	−1		µA
I_{IH}	High-level input current	V_I = V_{CC}			0.005	2.5	µA
I_{IL}	Low-level input current	V_I = 0 V			−0.005	2.5	µA
I_{CC}	Operating supply current, normal sampling (short)	$\overline{CS}$ at 0 V, Ext ref	V_{CC} = 4.5 V to 5.5 V			2	mA
			V_{CC} = 3 V to 3.3 V			1	
		$\overline{CS}$ at 0 V, Int ref	V_{CC} = 4.5 V to 5.5 V			2.4	mA
			V_{CC} = 3 V to 3.3 V			1.7	
	Operating supply current, extended sampling	$\overline{CS}$ at 0 V, Ext ref	V_{CC} = 4.5 V to 5.5 V		1.1		mA
			V_{CC} = 3 V to 3.3 V		1		
		$\overline{CS}$ at 0 V, Int ref	V_{CC} = 4.5 V to 5.5 V		2.1		mA
			V_{CC} = 3 V to 3.3 V		1.7		
	Internal reference supply current	$\overline{CS}$ at 0 V, V_{CC} = 4.5 V to 5.5 V				1	mA
		V_{CC} = 3 V to 3.3 V				0.7	
$I_{CC(PD)}$	Power down supply current for all digital inputs, $0 \le V_I \le 0.3$ V or $V_I \ge V_{CC} - 0.3$ V, SCLK = 0	V_{CC} = 4.5 V to 5.5 V, Ext clock			1		µA
		V_{CC} = 3 V to 3.3 V, Ext clock			1		
$I_{CC(AUTOPWDN)}$	Auto power-down current for all digital inputs, $0 \le V_I \le 0.3$ V or $V_I \ge V_{CC} - 0.3$ V, SCLK = 0	V_{CC} = 4.5 V to 5.5 V, Ext clock, Ext ref			1‡		µA
		V_{CC} = 3 V to 3.3 V, Ext ref, Ext clock			1§		
	Selected channel leakage current	Selected channel at V_{CC}				2.5	µA
		Selected channel at 0 V				2.5	
	Maximum EXT analog reference current into REFP (use external reference)	V_{REFP} = V_{CC} = 5.5 V, V_{REFM} = GND				20	µA
C_i	Input capacitance	Analog inputs			45	50	pF
		Control Inputs			5	25	
Z_i	Input MUX ON resistance	V_{CC} = 4.5 V				500	Ω
		V_{CC} = 3 V				600	

† All typical values are at V_{CC} = 5 V, T_A = 25°C.
‡ 1.2 mA typical if internal reference is used, 165 µA typical if internal clock is used.
§ 0.8 mA typical if internal reference is used, 116 µA typical if internal clock is used.

electrical characteristics over recommended operating free-air temperature range, V_{CC} = V_{REFP} = 3 V to 5.5 V, SCLK frequency = 20 MHz at 5 V, 15 MHz at 3 V (unless otherwise noted) (continued)

ac specifications

PARAMETER		TEST CONDITIONS		MIN	TYP	MAX	UNIT
SINAD	Signal-to-noise ratio +distortion	f_I = 12 kHz at 200 KSPS		65	71		dB
THD	Total harmonic distortion	f_I = 12 kHz at 200 KSPS	T_A = −55°C		−82	−73	dB
			All other temperatures		−82	−75	
ENOB	Effective number of bits	f_I = 12 kHz at 200 KSPS			11.6		Bits
SFDR	Spurious free dynamic range	f_I = 12 kHz at 200 KSPS			−84	−75	dB
Analog input							
	Full power-bandwidth, −3 dB				1		MHz
	Full-power bandwidth, −1 dB				500		kHz

reference specifications (0.1 μF and 10 μF between REFP and REFM pins)

PARAMETER	TEST CONDITIONS		MIN	TYP	MAX	UNIT
Positive reference input voltage, REFP	V_{CC} = 3 V to 5.5 V		2		V_{CC}	V
Negative reference input voltage, REFM	V_{CC} = 3 V to 5.5 V		0		2	V
Reference Input impedance	V_{CC} = 5.5 V	CS = 1, SCLK = 0, (off)	100			MΩ
		CS = 0, SCLK = 20 MHz (on)	20	25		kΩ
	V_{CC} = 3 V	CS = 1, SCLK = 0 (off)	100			MΩ
		CS = 0, SCLK = 20 MHz (on)	20	25		kΩ
Reference Input voltage difference, REFP − REFM	V_{CC} = 3 V to 5.5 V		2		V_{CC}	V
Internal reference voltage, REFP − REFM	V_{CC} = 5.5 V	VREF SELECT = 4 V	3.85	4	4.15	V
	V_{CC} = 5.5 V	VREF SELECT = 2 V	1.925	2	2.075	V
	V_{CC} = 3 V	VREF SELECT = 2 V	1.925	2	2.075	V
Internal reference start-up time	V_{CC} = 5.5 V, 3 V with 10 μF compensation cap			20		ms
Internal reference temperature coefficient	V_{CC} = 3 V to 5.5 V			16	40†	PPM/°C

† Not assured

operating characteristics over recommended operating free-air temperature range, $V_{CC} = V_{REFP}$ = 3 V to 5.5 V, SCLK frequency = 20 MHz (unless otherwise noted)

PARAMETER			TEST CONDITIONS		MIN	TYP†	MAX	UNIT
E_L	Integral linearity error (INL) (see Note 5)						±1.2	LSB
E_D	Differential linearity error (DNL)		See Note 4				±1	LSB
E_O	Offset error (see Note 6)		See Note 4	Q Suffix			±2	LSB
				M Suffix, T_A = 25°C and 125°C	−4		+6	
				M Suffix, T_A = −55°C	−4		+6.2	
E_{FS}	Full scale error (see Note 6)		See Note 4	Q Suffix		±1.1	±4	LSB
				M Suffix, T_A = 25°C and 125°C	−4	±1.1	+6	
				M Suffix, T_A = −55°C	−4	±1.1	+7.6	
	Self-test output code (see Table 1 and Note 7)		SDI = B000h			800h (2048D)		
			SDI = C000h			000h (0D)		
			SDI = D000h			FFFh (4095D)		
$t_{(conv)}$	Conversion time	Internal OSC	OSC = 3 MHz to 6 MHz			3.2	4.65	µs
		External SCLK				$\frac{(14 \times DIV)}{f_{SCLK}}$		
$t_{(sample)}$	Sampling time		With a maximum of 1-kΩ input source impedance		600			ns

† All typical values are at T_A = 25°C.

NOTES: 4. Analog input voltages greater than that applied to REFP convert as all ones (111111111111), while input voltages less than that applied to REFM convert as all zeros (000000000000).
5. Linear error is the maximum deviation from the best straight line through the A/D transfer characteristics.
6. Zero error is the difference between 000000000000 and the converted output for zero input voltage: full-scale error is the difference between 111111111111 and the converted output for full-scale input voltage.
7. Both the input data and the output codes are expressed in positive logic.

PARAMETER MEASUREMENT INFORMATION

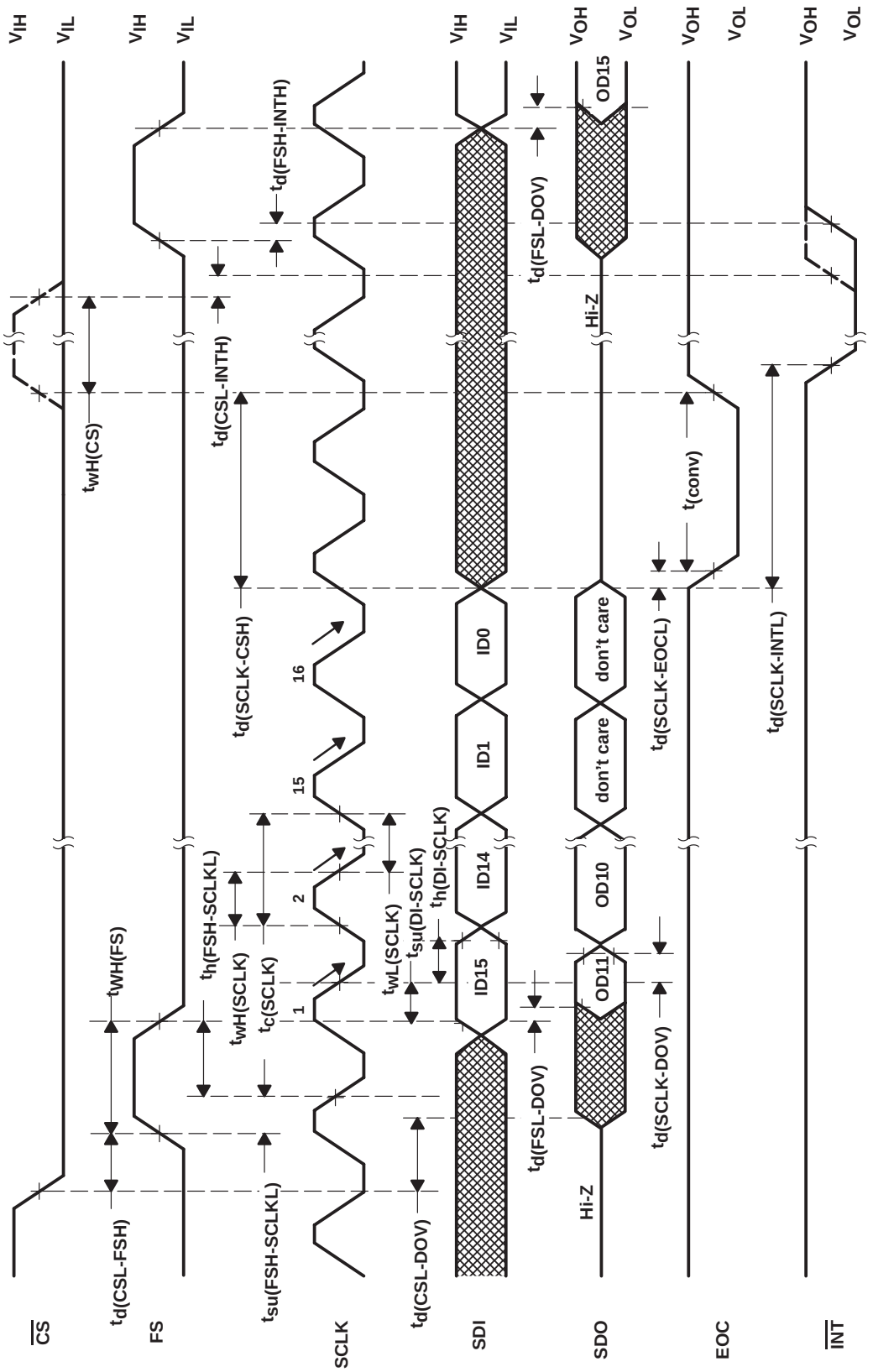

Figure 16. Critical Timing (Normal Sampling, FS is Active)

PARAMETER MEASUREMENT INFORMATION

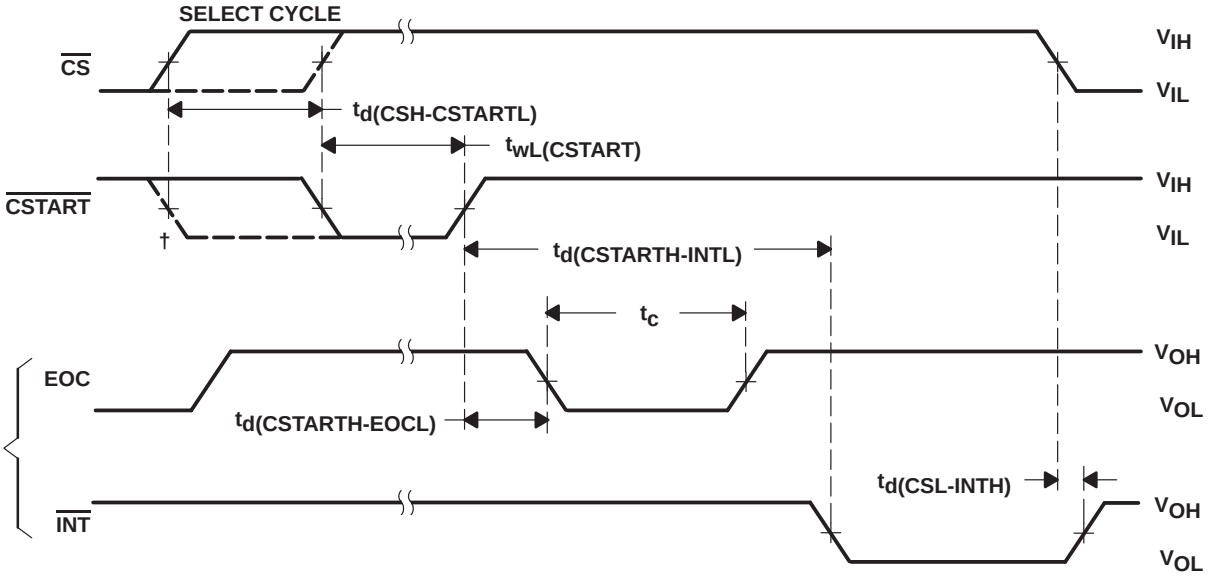

† CSTART falling edge may come before the rising edge of CS but no sooner than the fifth SCLK of the SELECT CYCLE.

Figure 17. Critical Timing (Extended Sampling, Single Shot)

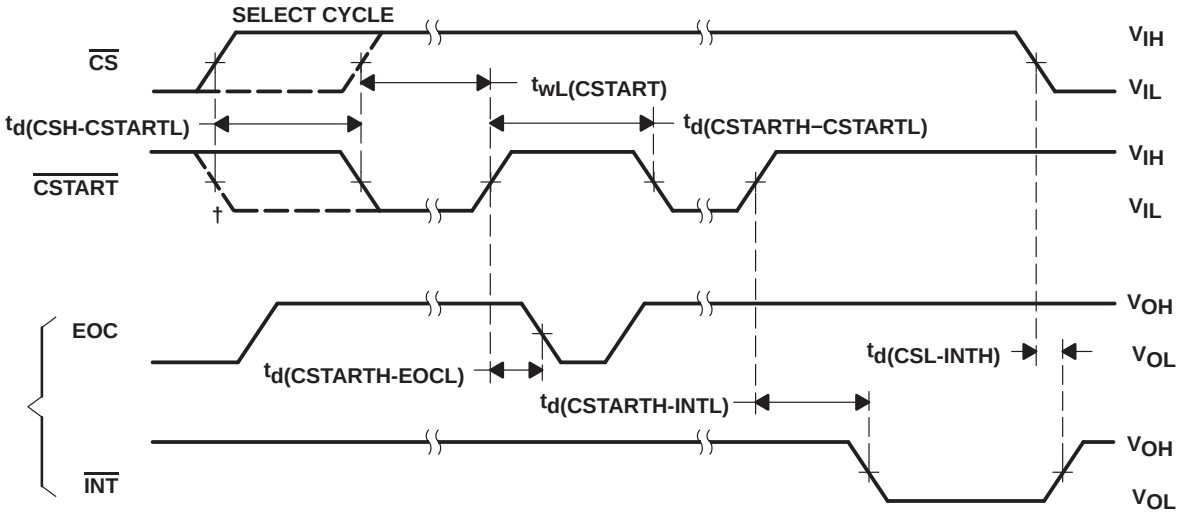

† CSTART falling edge may come before the rising edge of CS but no sooner than the fifth SCLK of the SELECT CYCLE.

Figure 18. Critical Timing (Extended Sampling, Repeat/Sweep/Repeat Sweep)

PARAMETER MEASUREMENT INFORMATION

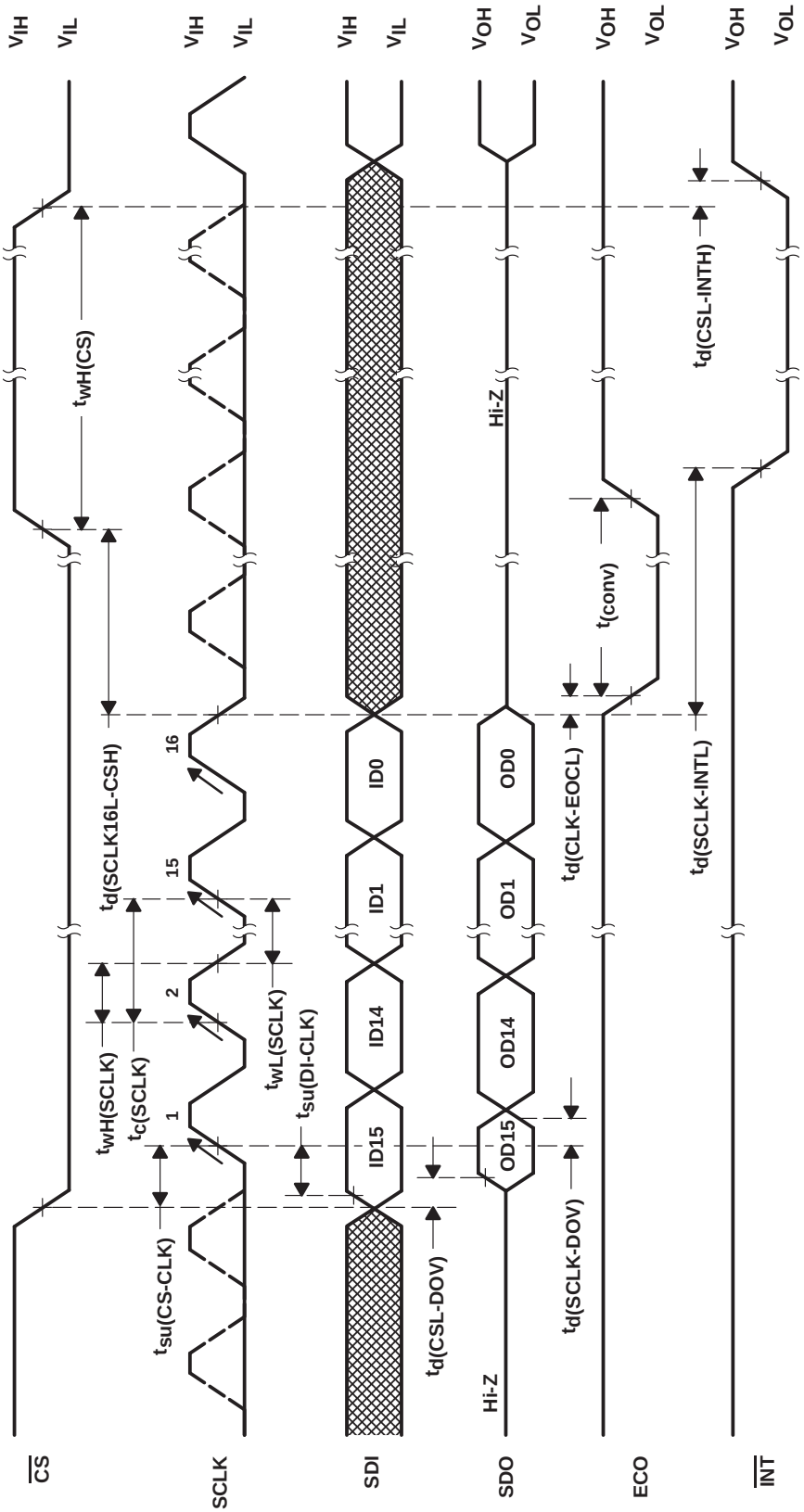

Figure 19. Critical Timing (Normal Sampling, FS = 1)

TYPICAL CHARACTERISTICS

INTEGRAL NONLINEARITY
vs
TEMPERATURE

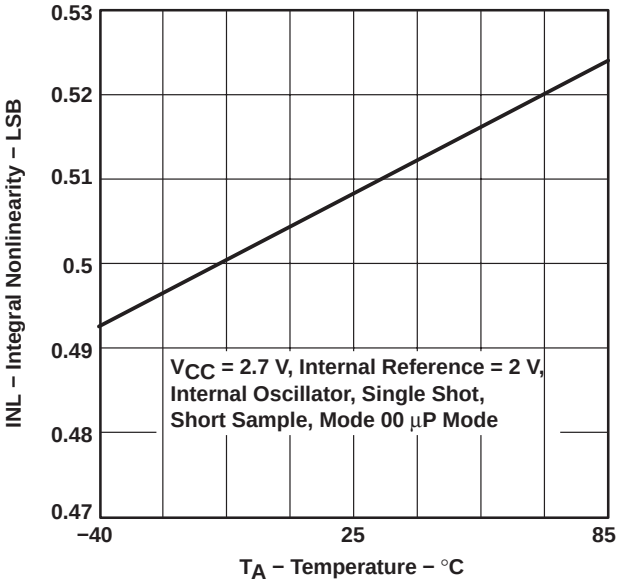

Figure 20

INTEGRAL NONLINEARITY
vs
TEMPERATURE

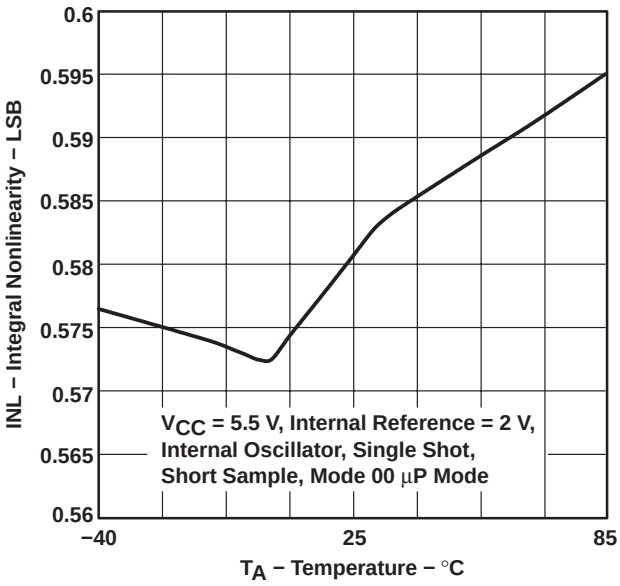

Figure 21

DIFFERENTIAL NONLINEARITY
vs
TEMPERATURE

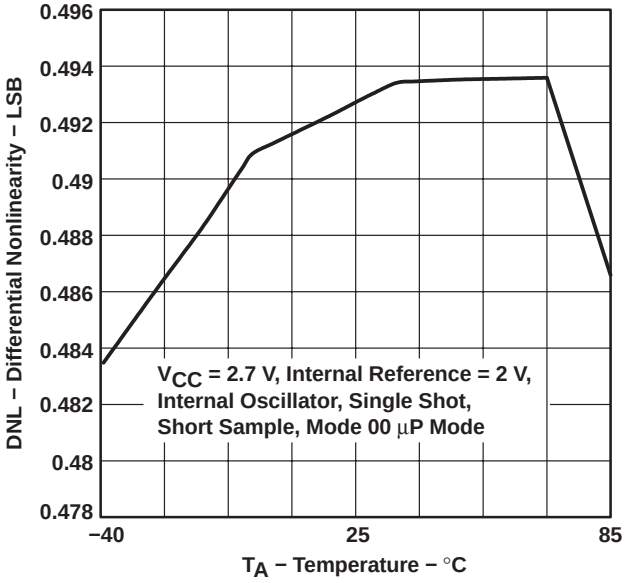

Figure 22

DIFFERENTIAL NONLINEARITY
vs
TEMPERATURE

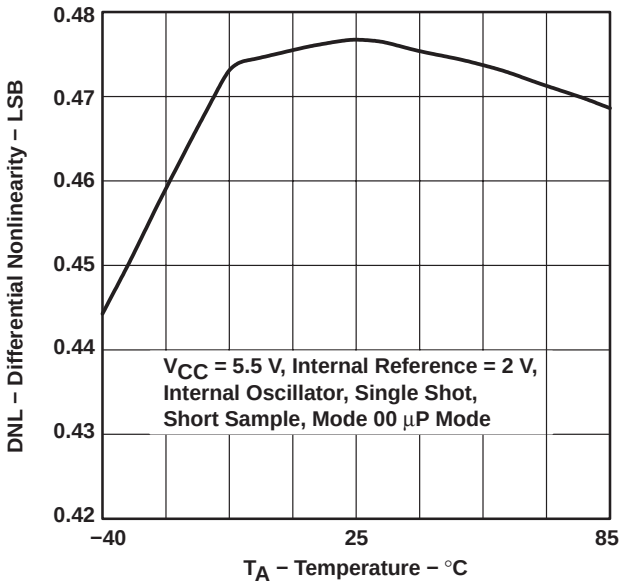

Figure 23

TYPICAL CHARACTERISTICS

OFFSET ERROR vs TEMPERATURE

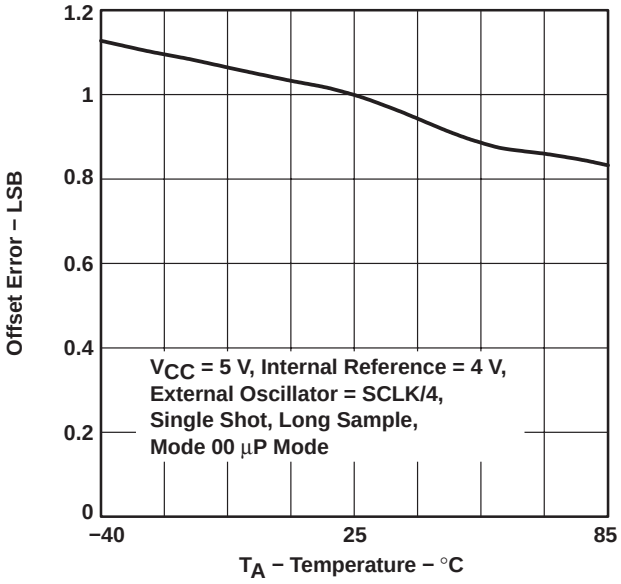

Figure 24

GAIN ERROR vs TEMPERATURE

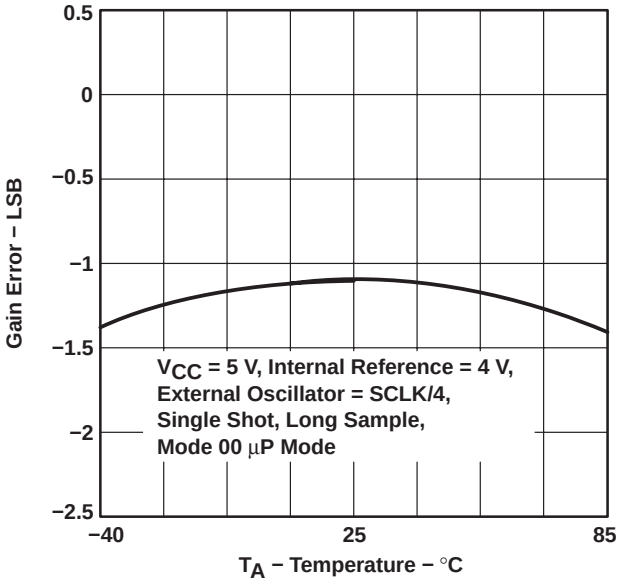

Figure 25

SUPPLY CURRENT vs TEMPERATURE

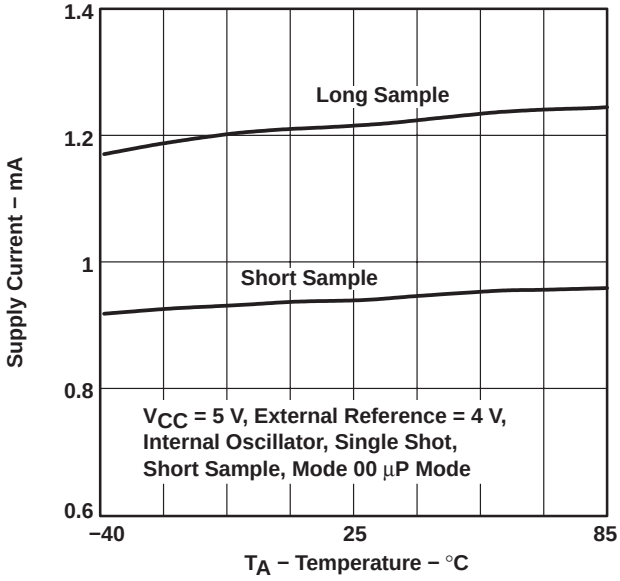

Figure 26

POWER DOWN CURRENT vs TEMPERATURE

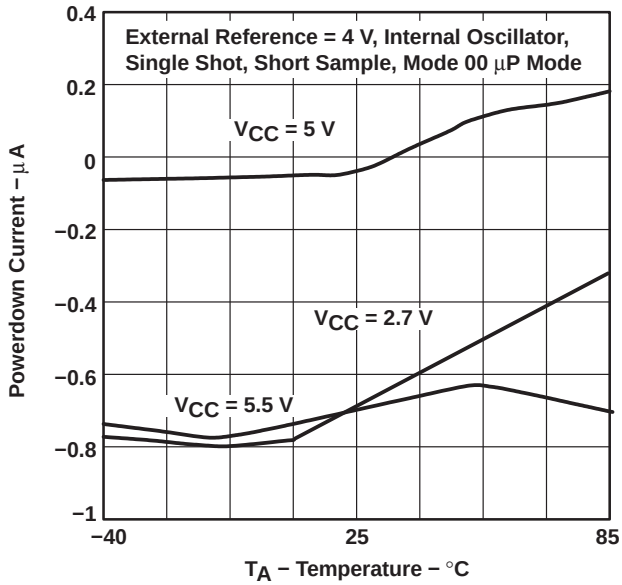

Figure 27

TYPICAL CHARACTERISTICS

INTEGRAL NONLINEARITY vs SAMPLES

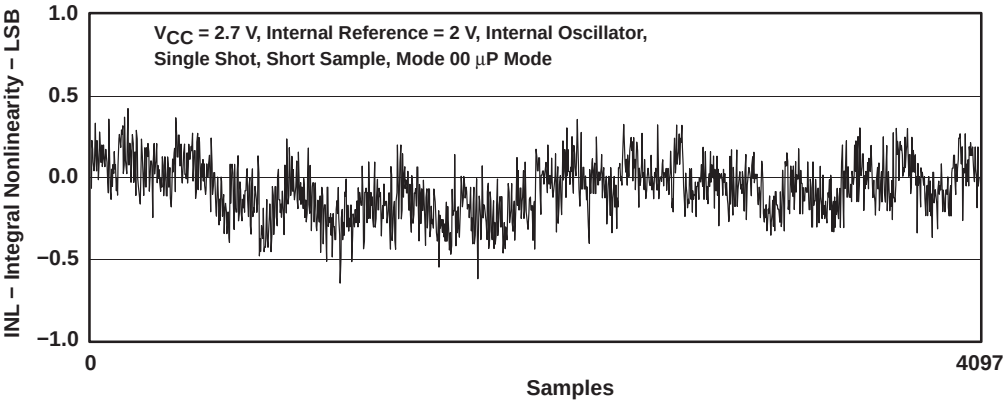

Figure 28

DIFFERENTIAL NONLINEARITY vs SAMPLES

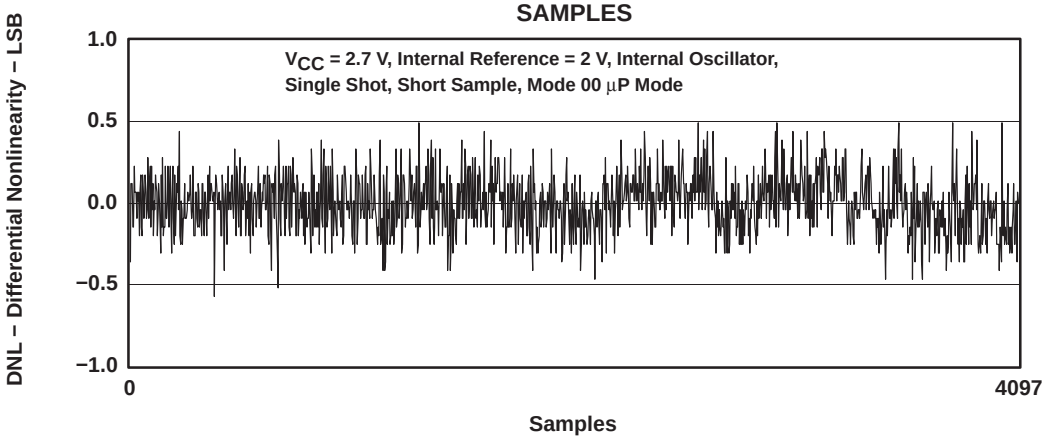

Figure 29

TYPICAL CHARACTERISTICS

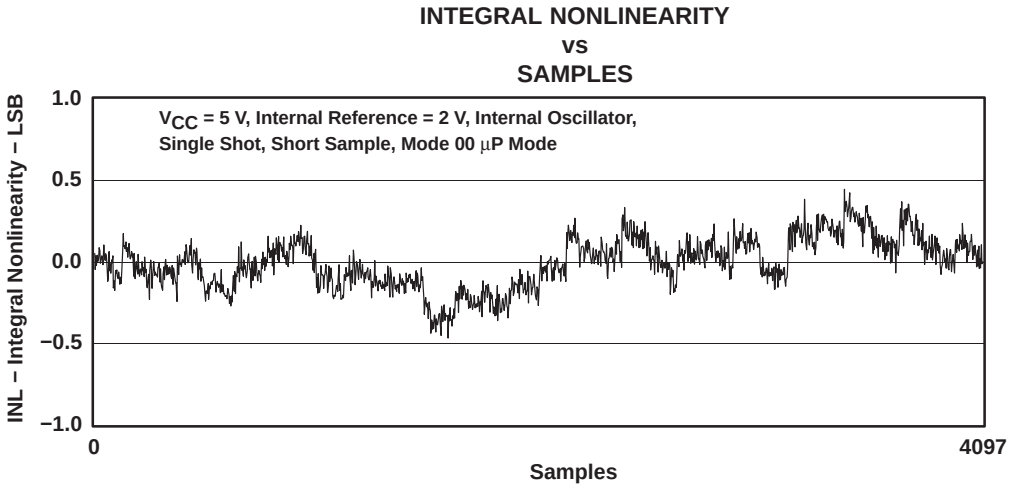

Figure 30

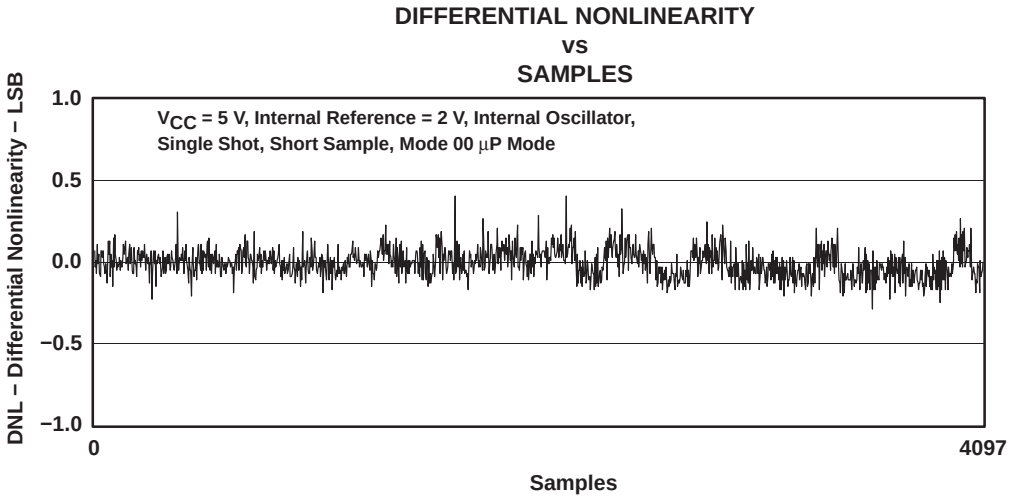

Figure 31

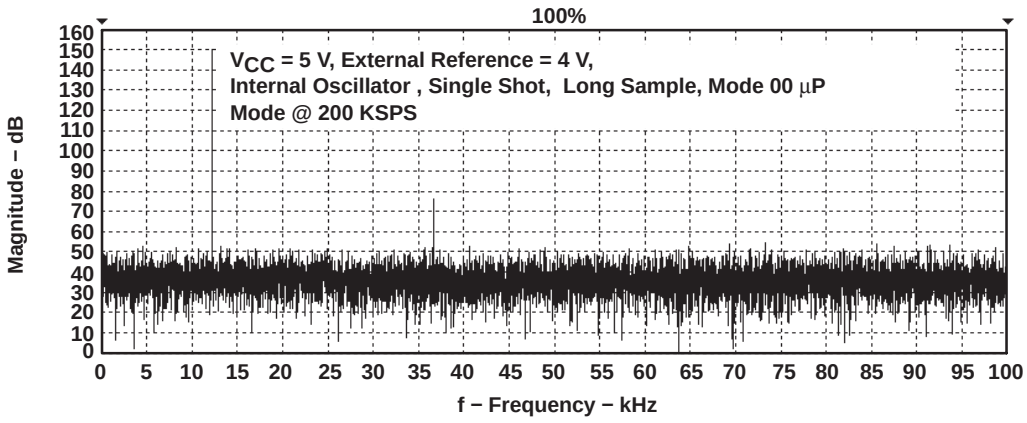

Figure 32

TYPICAL CHARACTERISTICS

SIGNAL-TO-NOISE + DISTORTION
vs
INPUT FREQUENCY

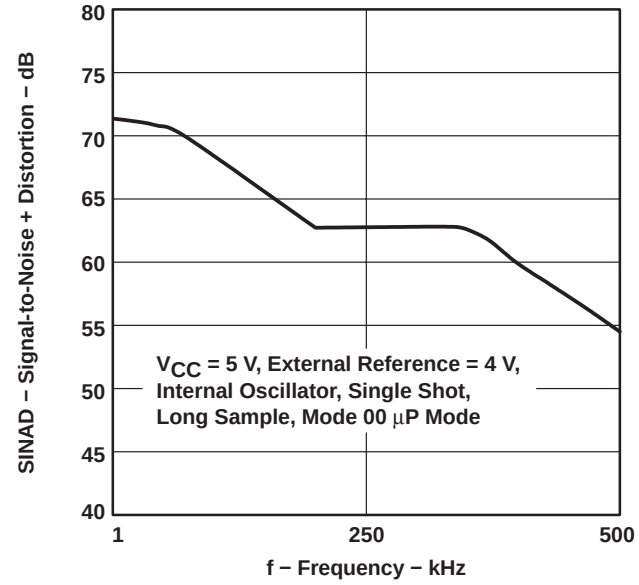

Figure 33

EFFECTIVE NUMBER OF BITS
vs
INPUT FREQUENCY

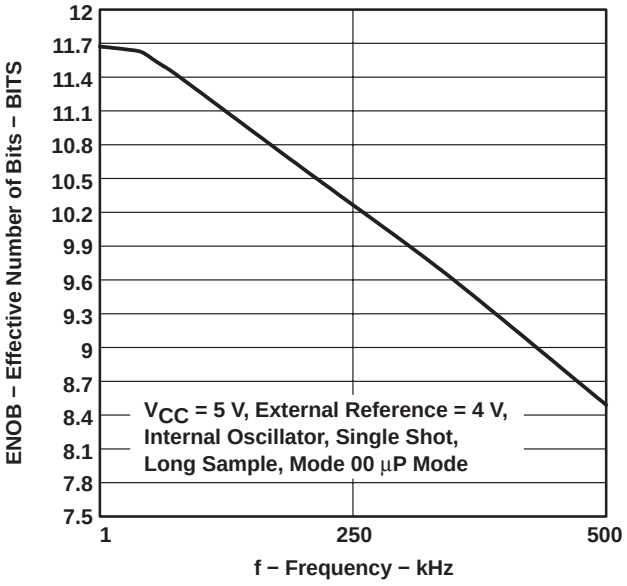

Figure 34

TOTAL HARMONIC DISTORTION
vs
INPUT FREQUENCY

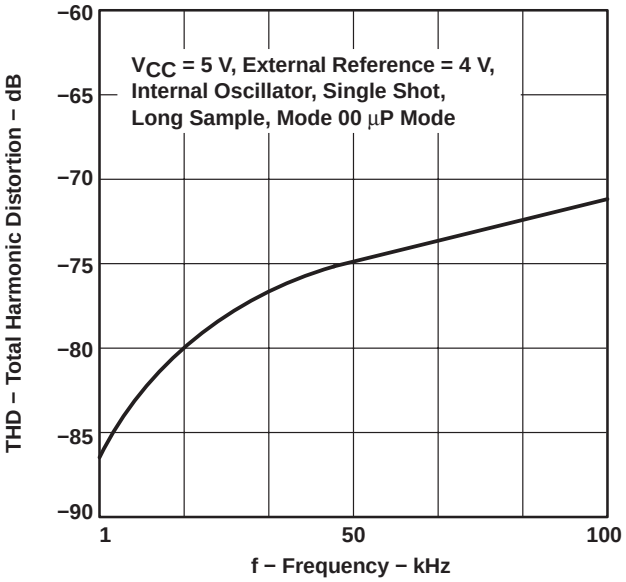

Figure 35

SPURIOUS FREE DYNAMIC RANGE
vs
INPUT FREQUENCY

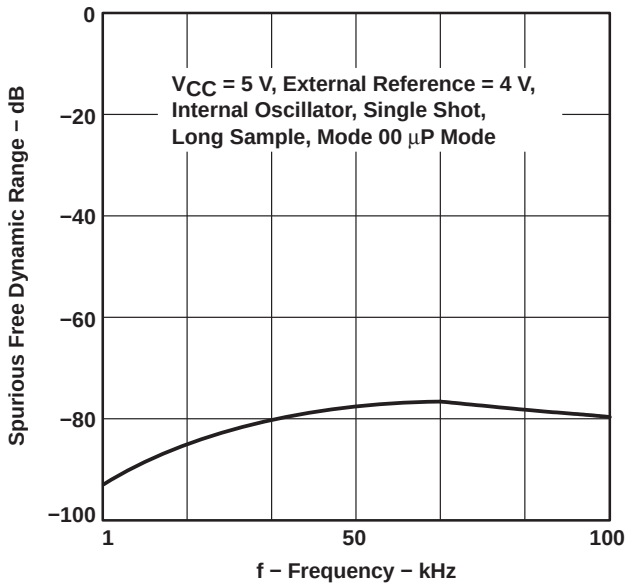

Figure 36

PRINCIPLES OF OPERATION

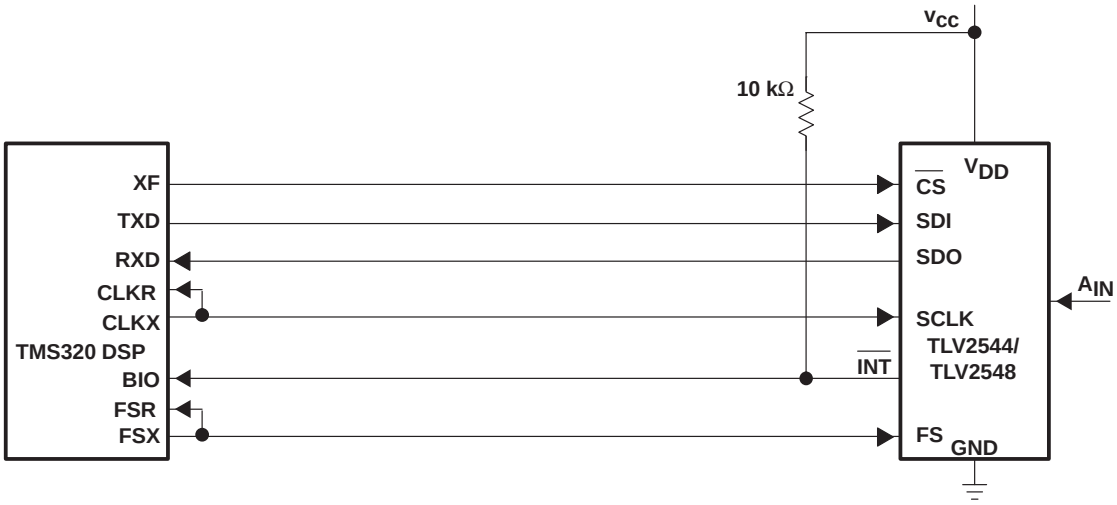

Figure 37. Typical Interface to a TMS320 DSP

PACKAGING INFORMATION

Orderable part number	Status (1)	Material type (2)	Package | Pins	Package qty | Carrier	RoHS (3)	Lead finish/ Ball material (4)	MSL rating/ Peak reflow (5)	Op temp (°C)	Part marking (6)
5962-9957001Q2A	Active	Production	LCCC (FK) | 20	55 | TUBE	ROHS Exempt	Call TI	N/A for Pkg Type	-55 to 125	5962-9957001Q2A TLV2548 MFKB
TLV2544QD	Active	Production	SOIC (D) | 16	40 | TUBE	Yes	NIPDAU	Level-1-260C-UNLIM	-40 to 125	TLV2544QD
TLV2544QD.A	Active	Production	SOIC (D) | 16	40 | TUBE	Yes	NIPDAU	Level-1-260C-UNLIM	-40 to 125	TLV2544QD
TLV2544QDG4	Active	Production	SOIC (D) | 16	40 | TUBE	Yes	NIPDAU	Level-1-260C-UNLIM	-	V2544QD
TLV2544QDG4.A	Active	Production	SOIC (D) | 16	40 | TUBE	Yes	NIPDAU	Level-1-260C-UNLIM	-40 to 125	V2544QD
TLV2544QDR	Active	Production	SOIC (D) | 16	2500 | LARGE T&R	Yes	NIPDAU	Level-1-260C-UNLIM	-40 to 125	TLV2544QD
TLV2544QDR.A	Active	Production	SOIC (D) | 16	2500 | LARGE T&R	Yes	NIPDAU	Level-1-260C-UNLIM	-40 to 125	TLV2544QD
TLV2548MFKB	Active	Production	LCCC (FK) | 20	55 | TUBE	ROHS Exempt	Call TI	N/A for Pkg Type	-55 to 125	5962-9957001Q2A TLV2548 MFKB
TLV2548MFKB.A	Active	Production	LCCC (FK) | 20	55 | TUBE	ROHS Exempt	Call TI	N/A for Pkg Type	-55 to 125	5962-9957001Q2A TLV2548 MFKB
TLV2548QDW	Active	Production	SOIC (DW) | 20	25 | TUBE	Yes	NIPDAU	Level-1-260C-UNLIM	-40 to 125	TLV2548QDW
TLV2548QDW.A	Active	Production	SOIC (DW) | 20	25 | TUBE	Yes	NIPDAU	Level-1-260C-UNLIM	-40 to 125	TLV2548QDW
TLV2548QDWG4	Active	Production	SOIC (DW) | 20	25 | TUBE	Yes	NIPDAU	Level-1-260C-UNLIM	-	TLV2548QDW
TLV2548QDWG4.A	Active	Production	SOIC (DW) | 20	25 | TUBE	Yes	NIPDAU	Level-1-260C-UNLIM	-40 to 125	TLV2548QDW
TLV2548QDWR	Active	Production	SOIC (DW) | 20	2000 | LARGE T&R	Yes	NIPDAU	Level-1-260C-UNLIM	-40 to 125	TLV2548QDW
TLV2548QDWR.A	Active	Production	SOIC (DW) | 20	2000 | LARGE T&R	Yes	NIPDAU	Level-1-260C-UNLIM	-40 to 125	TLV2548QDW
TLV2548QDWRG4	Active	Production	SOIC (DW) | 20	2000 | LARGE T&R	Yes	NIPDAU	Level-1-260C-UNLIM	-	TLV2548QDW
TLV2548QDWRG4.A	Active	Production	SOIC (DW) | 20	2000 | LARGE T&R	Yes	NIPDAU	Level-1-260C-UNLIM	-40 to 125	TLV2548QDW

(1) **Status:** For more details on status, see our product life cycle.

(2) **Material type:** When designated, preproduction parts are prototypes/experimental devices, and are not yet approved or released for full production. Testing and final process, including without limitation quality assurance, reliability performance testing, and/or process qualification, may not yet be complete, and this item is subject to further changes or possible discontinuation. If available for ordering, purchases will be subject to an additional waiver at checkout, and are intended for early internal evaluation purposes only. These items are sold without warranties of any kind.

(3) **RoHS values:** Yes, No, RoHS Exempt. See the TI RoHS Statement for additional information and value definition.

(4) **Lead finish/Ball material:** Parts may have multiple material finish options. Finish options are separated by a vertical ruled line. Lead finish/Ball material values may wrap to two lines if the finish value exceeds the maximum column width.

(5) **MSL rating/Peak reflow:** The moisture sensitivity level ratings and peak solder (reflow) temperatures. In the event that a part has multiple moisture sensitivity ratings, only the lowest level per JEDEC standards is shown. Refer to the shipping label for the actual reflow temperature that will be used to mount the part to the printed circuit board.

(6) **Part marking:** There may be an additional marking, which relates to the logo, the lot trace code information, or the environmental category of the part.

Multiple part markings will be inside parentheses. Only one part marking contained in parentheses and separated by a "~" will appear on a part. If a line is indented then it is a continuation of the previous line and the two combined represent the entire part marking for that device.

Important Information and Disclaimer: The information provided on this page represents TI's knowledge and belief as of the date that it is provided. TI bases its knowledge and belief on information provided by third parties, and makes no representation or warranty as to the accuracy of such information. Efforts are underway to better integrate information from third parties. TI has taken and continues to take reasonable steps to provide representative and accurate information but may not have conducted destructive testing or chemical analysis on incoming materials and chemicals. TI and TI suppliers consider certain information to be proprietary, and thus CAS numbers and other limited information may not be available for release.

In no event shall TI's liability arising out of such information exceed the total purchase price of the TI part(s) at issue in this document sold by TI to Customer on an annual basis.

OTHER QUALIFIED VERSIONS OF TLV2548M :

- Catalog : TLV2548
- Enhanced Product : TLV2548-EP

NOTE: Qualified Version Definitions:

- Catalog - TI's standard catalog product
- Enhanced Product - Supports Defense, Aerospace and Medical Applications

TAPE AND REEL INFORMATION

REEL DIMENSIONS

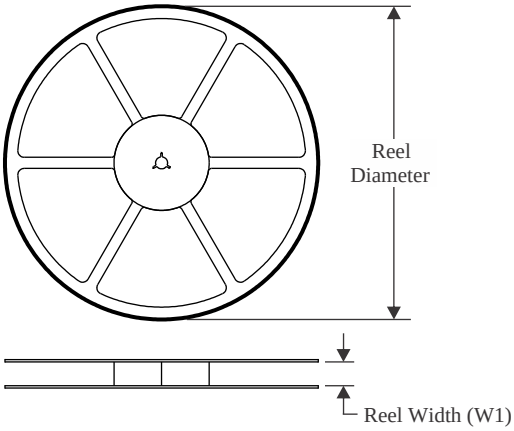

TAPE DIMENSIONS

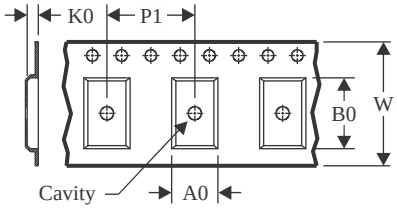

A0	Dimension designed to accommodate the component width
B0	Dimension designed to accommodate the component length
K0	Dimension designed to accommodate the component thickness
W	Overall width of the carrier tape
P1	Pitch between successive cavity centers

QUADRANT ASSIGNMENTS FOR PIN 1 ORIENTATION IN TAPE

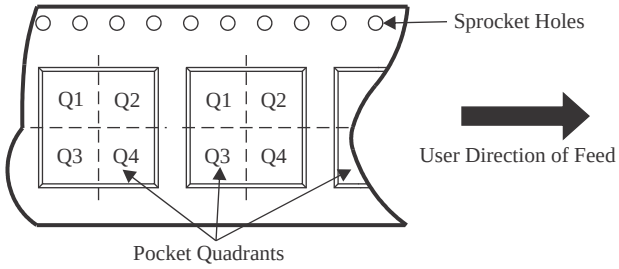

*All dimensions are nominal

Device	Package Type	Package Drawing	Pins	SPQ	Reel Diameter (mm)	Reel Width W1 (mm)	A0 (mm)	B0 (mm)	K0 (mm)	P1 (mm)	W (mm)	Pin1 Quadrant
TLV2544QDR	SOIC	D	16	2500	330.0	16.4	6.5	10.3	2.1	8.0	16.0	Q1
TLV2548QDWR	SOIC	DW	20	2000	330.0	24.4	10.8	13.3	2.7	12.0	24.0	Q1

TAPE AND REEL BOX DIMENSIONS

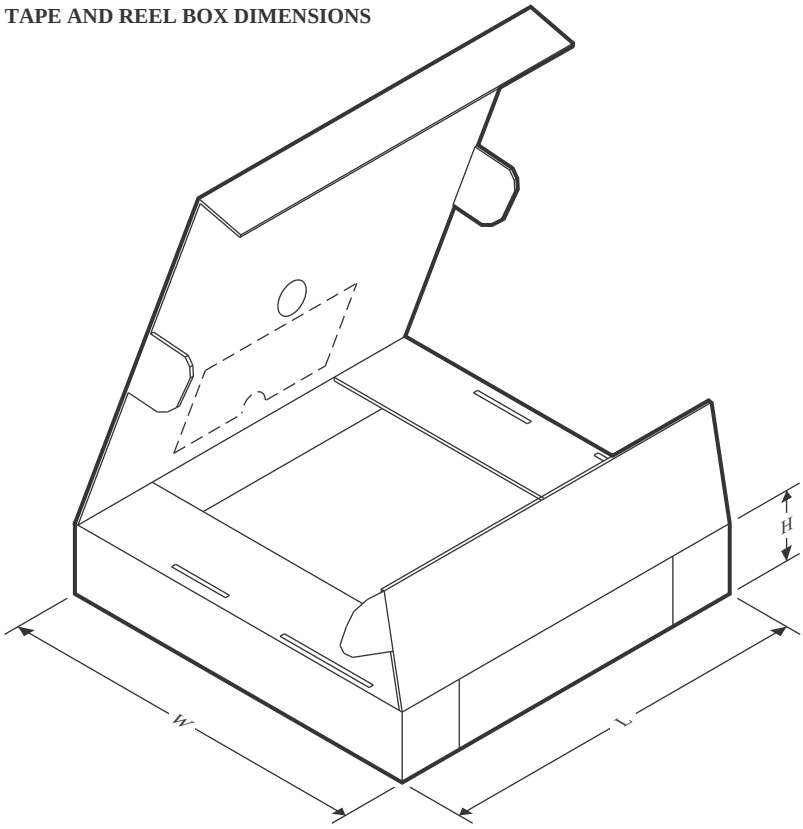

*All dimensions are nominal

Device	Package Type	Package Drawing	Pins	SPQ	Length (mm)	Width (mm)	Height (mm)
TLV2544QDR	SOIC	D	16	2500	350.0	350.0	43.0
TLV2548QDWR	SOIC	DW	20	2000	350.0	350.0	43.0

TUBE

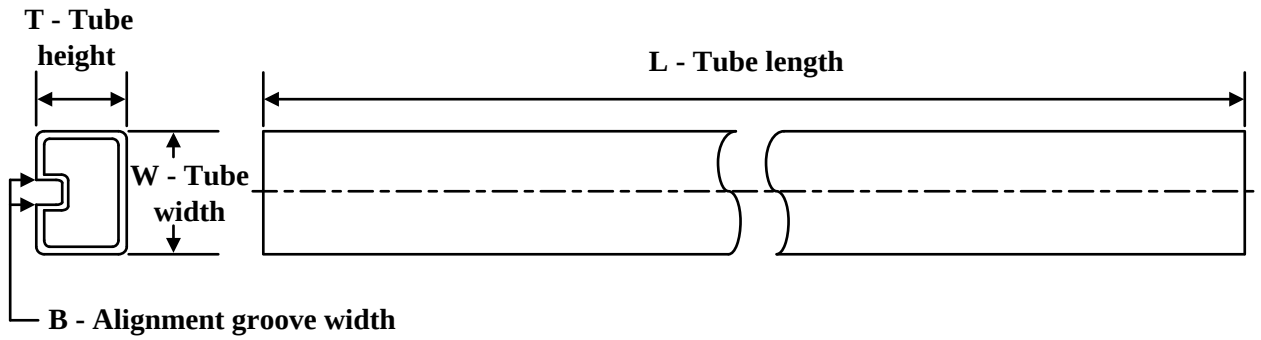

*All dimensions are nominal

Device	Package Name	Package Type	Pins	SPQ	L (mm)	W (mm)	T (µm)	B (mm)
5962-9957001Q2A	FK	LCCC	20	55	506.98	12.06	2030	NA
TLV2544QD	D	SOIC	16	40	505.46	6.76	3810	4
TLV2544QD.A	D	SOIC	16	40	505.46	6.76	3810	4
TLV2544QDG4	D	SOIC	16	40	505.46	6.76	3810	4
TLV2544QDG4.A	D	SOIC	16	40	505.46	6.76	3810	4
TLV2548MFKB	FK	LCCC	20	55	506.98	12.06	2030	NA
TLV2548MFKB.A	FK	LCCC	20	55	506.98	12.06	2030	NA
TLV2548QDW	DW	SOIC	20	25	506.98	12.7	4826	6.6
TLV2548QDW.A	DW	SOIC	20	25	506.98	12.7	4826	6.6
TLV2548QDWG4	DW	SOIC	20	25	506.98	12.7	4826	6.6
TLV2548QDWG4.A	DW	SOIC	20	25	506.98	12.7	4826	6.6

D (R–PDSO–G16) PLASTIC SMALL OUTLINE

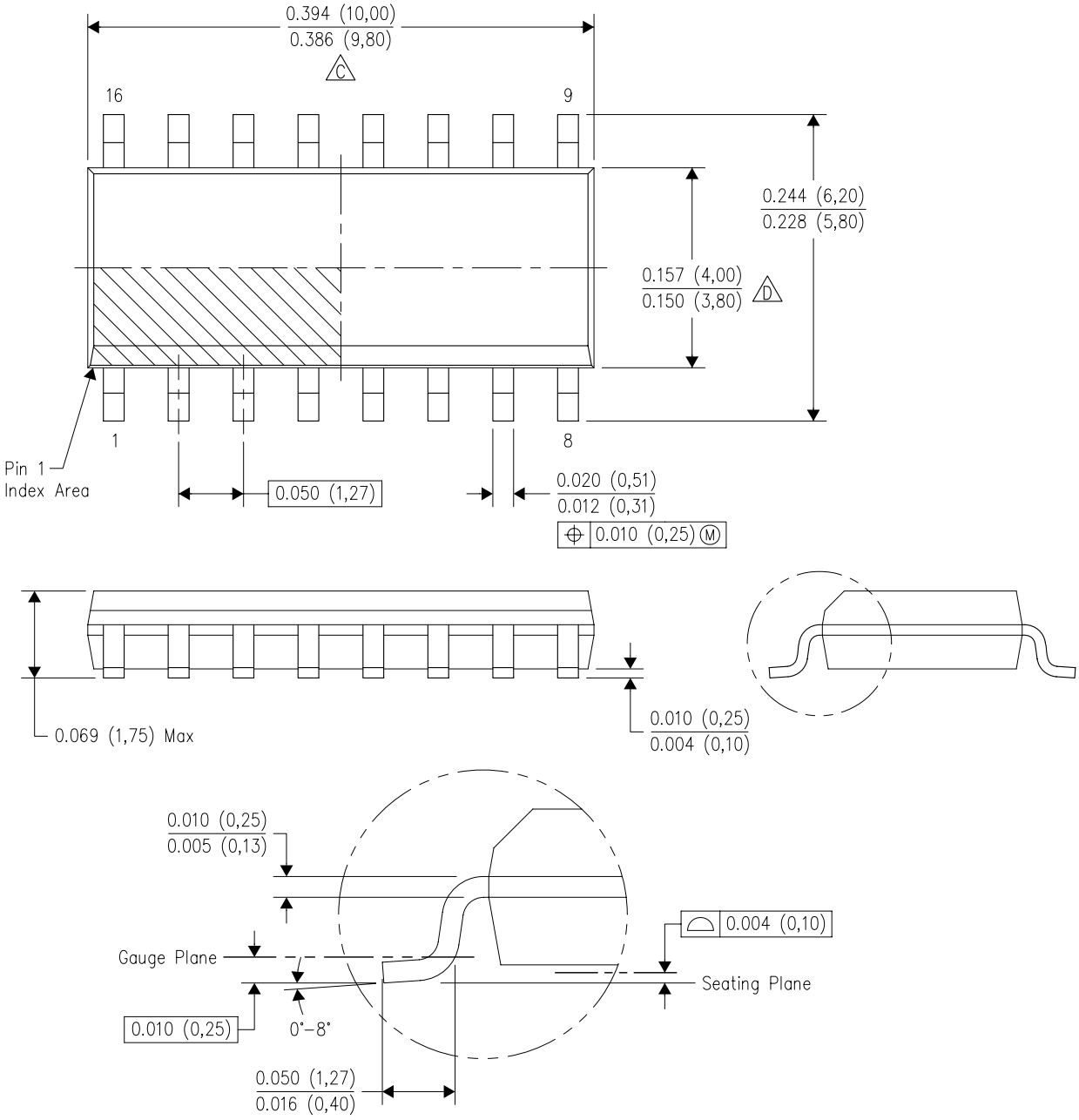

NOTES:
A. All linear dimensions are in inches (millimeters).
B. This drawing is subject to change without notice.
C. Body length does not include mold flash, protrusions, or gate burrs. Mold flash, protrusions, or gate burrs shall not exceed 0.006 (0,15) each side.
D. Body width does not include interlead flash. Interlead flash shall not exceed 0.017 (0,43) each side.
E. Reference JEDEC MS–012 variation AC.

GENERIC PACKAGE VIEW

FK 20

LCCC - 2.03 mm max height

8.89 x 8.89, 1.27 mm pitch

LEADLESS CERAMIC CHIP CARRIER

This image is a representation of the package family, actual package may vary.
Refer to the product data sheet for package details.

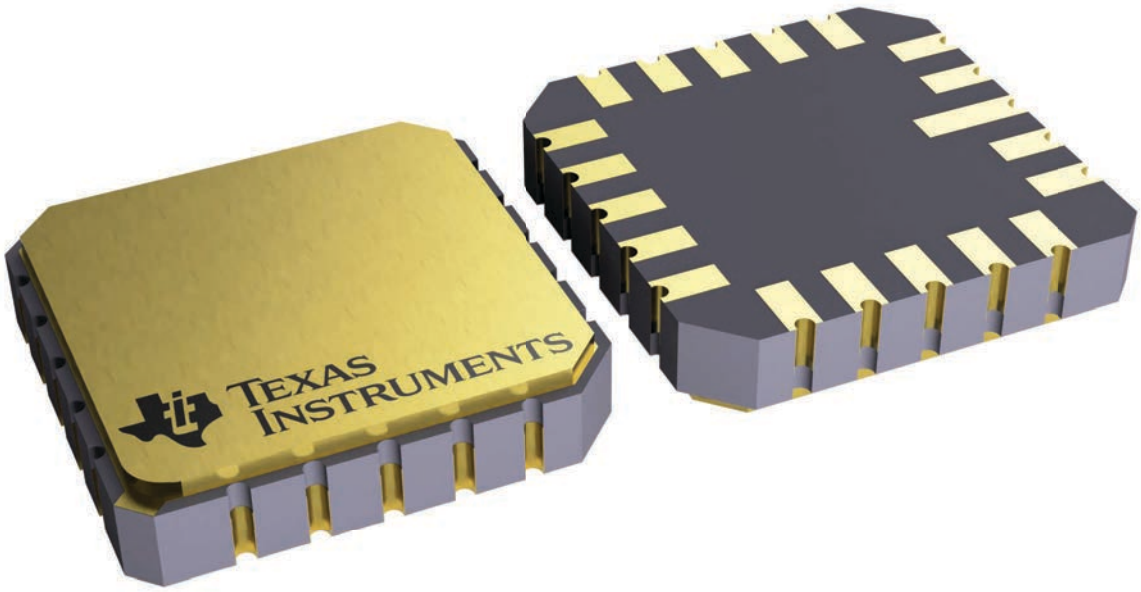

4229370VA\

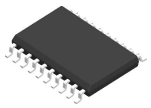

PACKAGE OUTLINE

DW0020A

SOIC - 2.65 mm max height

SOIC

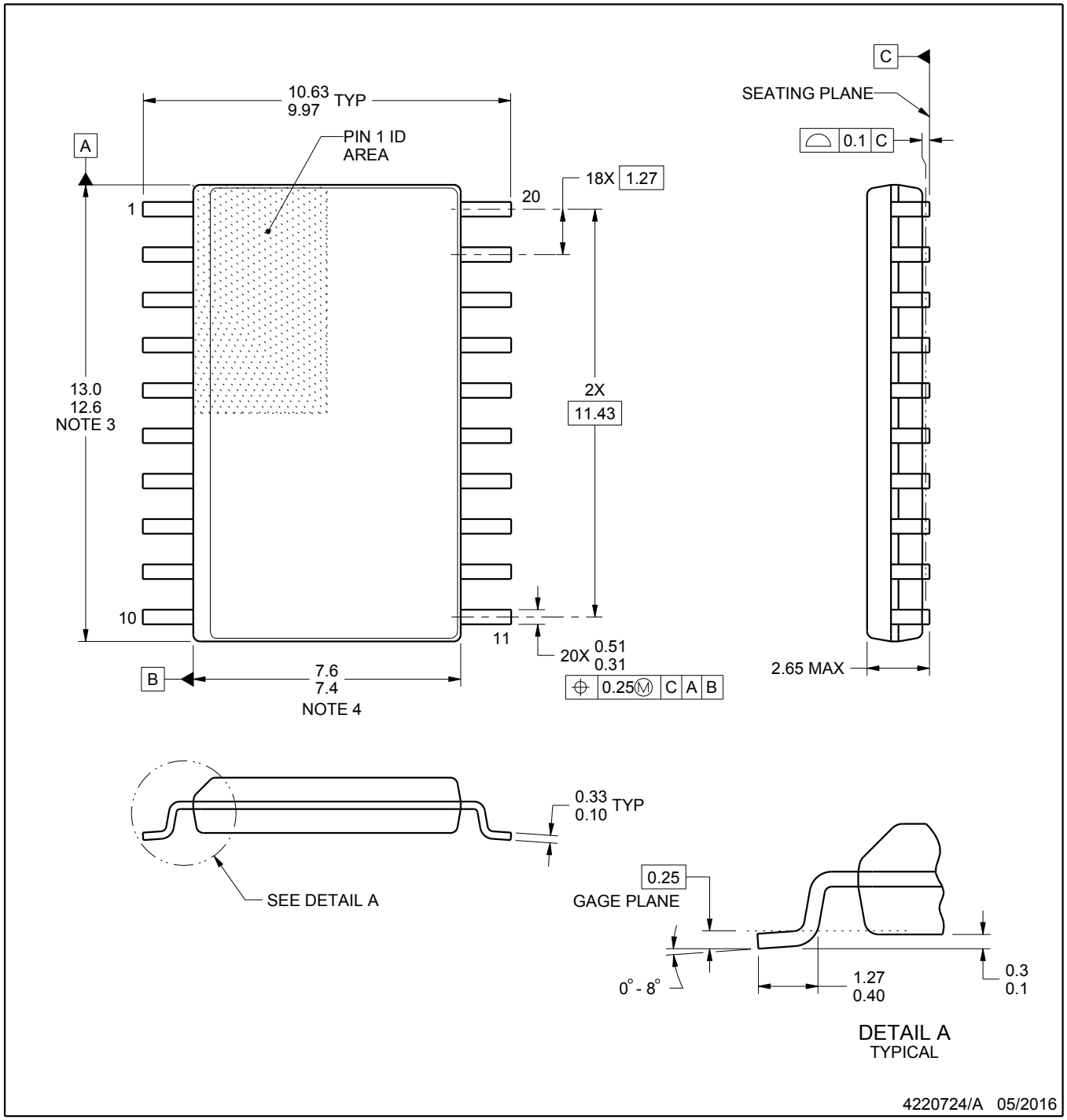

NOTES:

1. All linear dimensions are in millimeters. Dimensions in parenthesis are for reference only. Dimensioning and tolerancing per ASME Y14.5M.
2. This drawing is subject to change without notice.
3. This dimension does not include mold flash, protrusions, or gate burrs. Mold flash, protrusions, or gate burrs shall not exceed 0.15 mm per side.
4. This dimension does not include interlead flash. Interlead flash shall not exceed 0.43 mm per side.
5. Reference JEDEC registration MS-013.

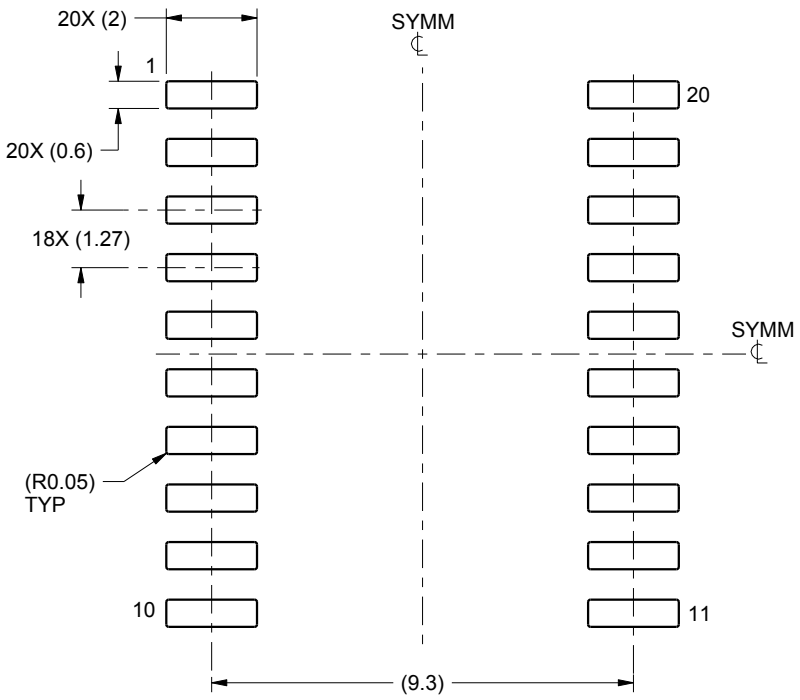

LAND PATTERN EXAMPLE
SCALE:6X

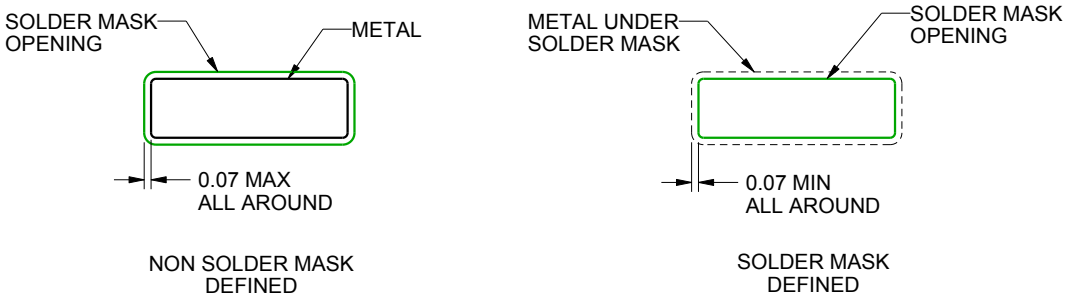

SOLDER MASK DETAILS

4220724/A 05/2016

NOTES: (continued)

6. Publication IPC-7351 may have alternate designs.
7. Solder mask tolerances between and around signal pads can vary based on board fabrication site.

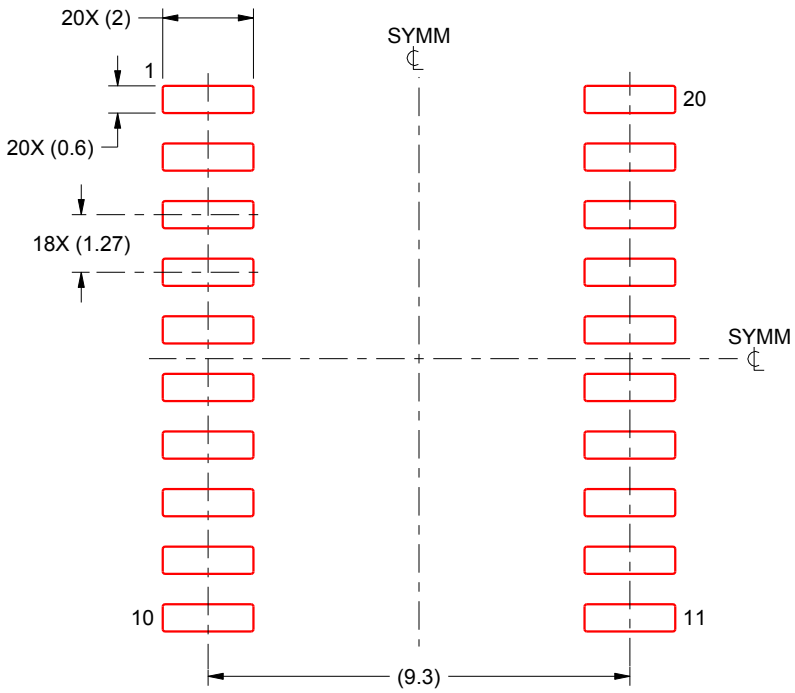

SOLDER PASTE EXAMPLE
BASED ON 0.125 mm THICK STENCIL
SCALE:6X

4220724/A 05/2016

NOTES: (continued)

8. Laser cutting apertures with trapezoidal walls and rounded corners may offer better paste release. IPC-7525 may have alternate design recommendations.
9. Board assembly site may have different recommendations for stencil design.

IMPORTANT NOTICE AND DISCLAIMER

TI PROVIDES TECHNICAL AND RELIABILITY DATA (INCLUDING DATASHEETS), DESIGN RESOURCES (INCLUDING REFERENCE DESIGNS), APPLICATION OR OTHER DESIGN ADVICE, WEB TOOLS, SAFETY INFORMATION, AND OTHER RESOURCES “AS IS” AND WITH ALL FAULTS, AND DISCLAIMS ALL WARRANTIES, EXPRESS AND IMPLIED, INCLUDING WITHOUT LIMITATION ANY IMPLIED WARRANTIES OF MERCHANTABILITY, FITNESS FOR A PARTICULAR PURPOSE OR NON-INFRINGEMENT OF THIRD PARTY INTELLECTUAL PROPERTY RIGHTS.

These resources are intended for skilled developers designing with TI products. You are solely responsible for (1) selecting the appropriate TI products for your application, (2) designing, validating and testing your application, and (3) ensuring your application meets applicable standards, and any other safety, security, regulatory or other requirements.

These resources are subject to change without notice. TI grants you permission to use these resources only for development of an application that uses the TI products described in the resource. Other reproduction and display of these resources is prohibited. No license is granted to any other TI intellectual property right or to any third party intellectual property right. TI disclaims responsibility for, and you fully indemnify TI and its representatives against any claims, damages, costs, losses, and liabilities arising out of your use of these resources.

TI’s products are provided subject to TI’s Terms of Sale, TI’s General Quality Guidelines, or other applicable terms available either on ti.com or provided in conjunction with such TI products. TI’s provision of these resources does not expand or otherwise alter TI’s applicable warranties or warranty disclaimers for TI products. Unless TI explicitly designates a product as custom or customer-specified, TI products are standard, catalog, general purpose devices.

TI objects to and rejects any additional or different terms you may propose.

Copyright © 2026, Texas Instruments Incorporated

Last updated 10/2025