AC/DC Power Modules

TMP & TMPM Series, 4 to 60 Watt

CB Scheme

UL 60950-1
UL 62368-1

UL 508

Features

- Ultra compact, low profile plastic casing
- Fully encapsulated (pollution/dust)
- Single-, dual- and triple output models
- 2 standard package versions:
  - Screw terminal block for chassis mount
  - Solder pins for direct PCB mount
  - Optional pin-connector on request
- DIN-rail mount adaptor (optional)
- Universal input 85-264 VAC, 47-440 Hz
- Protection class II
- IEC/EN/UL 62368-1 approval, CB-report
- Over-temperature protection
- Protection against short circuit and oveload
- 3-year product warranty

The TMP & TMPM series AC/DC Power Modules is a new range of fully encapsulated power supplies in an ultra-compact casing. They feature easy chassis mounting with screw terminal block connection or direct PCB mounting with solder pins.
Full compliance with International safety standards for industrial control equipment qualifies the products for worldwide markets.
These power supplies offer a cost effective solution for many space critical applications in commercial and industrial electronic equipment and for polluted and dusty environment.

Single Output Models 4 to 10 Watt

	Order code PCB-mount with solder pins	Output power max.	Output	Efficiency typ.
	TMPM 04103	4 W	3.3 VDC / 1200 mA	70 %
	TMPM 04105		5.0 VDC / 800 mA	72 %
	TMPM 04109		9.0 VDC / 444 mA	75 %
	TMPM 04112		12 VDC / 333 mA	76 %
	TMPM 04115		15 VDC / 267 mA	76 %
	TMPM 04124		24 VDC / 167 mA	77 %
	TMP 07103	4.6 W	3.3 VDC / 1400 mA	70 %
	TMP 07105	7 W	5.0 VDC / 1400 mA	73 %
	TMP 07112		12 VDC / 583 mA	78 %
	TMP 07115		15 VDC / 466 mA	78 %
	TMP 07124		24 VDC / 291 mA	78 %
Small footprint	TMPM 10103	8.3 W	3.3 VDC / 2500 mA	70 %
Small footprint	TMPM 10105	10 W	5.0 VDC / 2000 mA	72 %
Small footprint	TMPM 10112		12 VDC / 833 mA	76 %
Small footprint	TMPM 10115		15 VDC / 667 mA	75 %
Small footprint	TMPM 10124		24 VDC / 417 mA	72 %
Low profile	TMP 10103	6.6 W	3.3 VDC / 2000 mA	70 %
Low profile	TMP 10105	10 W	5.0 VDC / 2000 mA	73 %
Low profile	TMP 10112		12 VDC / 833 mA	76 %
Low profile	TMP 10115		15 VDC / 666 mA	76 %
Low profile	TMP 10124		24 VDC / 416 mA	76 %

15 to 60 Watt and multi output models see next page -->

Single Output Models 15 to 60 Watt

Order code		Output power max.	Output	Efficiency
PCB-mount with solder pins	Chassis mount, screw terminal			typ.
TMP 15105	TMP 15105C	15 W	5 VDC / 3000 mA	75 %
TMP 15112	TMP 15112C		12 VDC / 1250 mA	79 %
TMP 15115	TMP 15115C		15 VDC / 1000 mA	79 %
TMP 15124	TMP 15124C		24 VDC / 625 mA	79 %
TMP 15148	TMP 15148C		48 VDC / 310 mA	79 %
TMP 30105	TMP 30105C	30 W	5 VDC / 6000 mA	78 %
TMP 30112	TMP 30112C		12 VDC / 2500 mA	80 %
TMP 30115	TMP 30115C		15 VDC / 2000 mA	80 %
TMP 30124	TMP 30124C		24 VDC / 1250 mA	80 %
TMP 30148	TMP 30148C		48 VDC / 625 mA	80 %
TMP 60105	TMP 60105C	51 W	5.1 VDC / 10'000 mA	79 %
TMP 60112	TMP 60112C	60 W	12 VDC / 5000 mA	82 %
TMP 60115	TMP 60115C		15 VDC / 4000 mA	83 %
TMP 60124	TMP 60124C		24 VDC / 2500 mA	84 %
TMP 60136	TMP 60136C		36 VDC / 1665 mA	84 %
TMP 60148	TMP 60148C		48 VDC / 1250 mA	84 %

Multi Output Models 4 to 30 Watt

Order code		Output	Output 1	Output 2	Output 3	Eff.
PCB-mount	Chassis mount	power				typ.
Models with common ground						
TMPM 04212		4 W	+12 VDC / 166 mA	–12 VDC / 166 mA		77 %
TMPM 04215			+15 VDC / 133 mA	–15 VDC / 133 mA		77 %
TMPM 04253			+5.0 VDC / 600 mA	+3.3 VDC / 150 mA		72 %
TMPM 04225			+12 VDC / 250 mA	+5.0 VDC / 120 mA		75 %
TMP 10212		10 W	+12 VDC / 380 mA	–12 VDC / 380 mA		77 %
TMP 10215			+15 VDC / 300 mA	–15 VDC / 300 mA		77 %
TMP 15212	TMP 15212C	15 W	+12 VDC / 650 mA	–12 VDC / 650 mA		79 %
TMP 15215	TMP 15215C		+15 VDC / 500 mA	–15 VDC / 500 mA		79 %
TMP 30212	TMP 30212C	30 W	+12 VDC / 1300 mA	–12 VDC / 1300 mA		80 %
TMP 30215	TMP 30215C		+15 VDC / 1000 mA	–15 VDC / 1000 mA		80 %
TMP 15252	TMP 15252C		5.0 VDC / 1500 mA	12 VDC / 625 mA		72 %
TMP 15512	TMP 15512C	15 W	5.0 VDC / 2000 mA	+12 VDC / 200 mA	–12 VDC / 200 mA	74 %
TMP 15515	TMP 15515C		5.0 VDC / 2000 mA	+15 VDC / 150 mA	–15 VDC / 150 mA	74 %
Models with output 1 isolated from output 2/3 (floating)						
TMP 30252	TMP 30252C	30 W	5.0 VDC / 3000 mA[2]	12 VDC / 1250 mA[2]		76 %
TMP 30512	TMP 30512C		5.0 VDC / 3000 mA[2]	+12 VDC / 600 mA[2]	–12 VDC / 600 mA[2]	76 %
TMP 30515	TMP 30515C		5.0 VDC / 3000 mA[2]	+15 VDC / 500 mA[2]	–15 VDC / 500 mA[2]	76 %
TMP 30522	TMP 30522C		5.0 VDC / 3000 mA[2]	+12 VDC / 1000 mA[2]	–12 VDC / 250 mA[3]	76 %
TMP 30316	TMP 30316C		3.3 VDC / 4000 mA[1]	+5.0 VDC / 1500 mA[1]	+12 VDC / 250 mA[3]	71 %
TMP 30317	TMP 30317C		5.0 VDC / 4500 mA[1]	+3.3 VDC / 1000 mA[2]	+12 VDC / 250 mA[3]	71 %

Peak current can exceed specified value by [1] 133 % [2] 150 % [3] 200 % but total output power must not exceed 30 W.

Input Specifications

Input voltage	– nominal		**100 – 240 VAC**
	– AC range (universal input)		**85 – 264 VAC**
	– DC range		**120 – 370 VDC**
Input frequency	– nominal		**50 / 60 Hz**
	– range	4 – 30 W models:	**47 – 440 Hz**
		60 W models:	**47 – 63 Hz**
Input current at full load	– 115 VAC / 230 VAC input	4 W models:	**80 mA / 55 mA typ.**
		7 W models:	**150 mA / 100 mA typ.**
		10 W models:	**200 mA / 130 mA typ.**
		15 W models:	**300 mA / 190 mA typ.**
		30 W models:	**550 mA / 330 mA typ.**
		60 W models:	**1050 mA / 670 mA typ.**
Recommended external input fuse		4 W models:	**1.0 A slow blow**
		7 – 15 W models:	**2.0 A slow blow**
		30 W models:	**3.5 A slow blow**
		60 W models:	**6.3 A slow blow**

Output Specifications

Voltage set accuracy			**±2 % max.**
Regulation	– Input variation Output 1		**1 % max.**
	– Input variation Output 2/3		**3 % max.**
	– Load variation	TMPM 04103 model (0–100%):	**1.5 % max.**
		single and floating outputs (10–100%):	**1 % max.** (0–100% for TMPM 04 models)
		common ground outputs balanced load (10–100%):	**2.5 % max.**
		common ground outputs unbalanced load (20/90%):	**5.0 % max.**
Minimum load		TMPM 04 single and sym.dual models:	**not required**
		TMPM 04 asym. dual models:	**25% per output**
		single and dual output models:	**10 % of rated max. current**
		triple output models main output:	**10 % of rated max. current**
		triple output models auxiliary outputs:	**20 % of rated max. current**
			operation at lower load condition will not damage these power supplies, however, they may not meet all listed specifications.
Ripple and noise (20MHz bandwidth)		3.3 VDC & 5.0 VDC outputs:	**1.8 % of Vout [mVp-p]**
		other outputs:	**1.0 % of Vout [mVp-p]**
Overload protection by current limit			**105 % min. of Inom, hiccup, automatic recovery** (long term overload condition may cause damage to the power supply)
Overvoltage protection by Zener diode (main output only)			**120 % of Vout typ.**
Start-up time			**400 ms typ.**
Hold-up time			**20 ms typ.**

Max. capacitive load [µF]		Model series						
Output:		TMPM 04	TMP 07	TMPM 10	TMP 10	TMP 15	TMP 30	TMP 60
Single output models:	3.3 VDC	1200	2200	2200	3900	-	-	-
	5.0 / 5.1 VDC	800	2200	2200	3300	3900	8000	8000
	9.0 VDC	440	-	-	-	-	-	-
	12 / 15 VDC	260	1000	1000	2200	2200	3900	3900
	24 VDC	160	680	680	1000	1000	1500	1500
	36 VDC	-	-	-	-	-	-	1000
	48 VDC	-	-	-	-	680	1000	800
Dual output models:	3.3 / 5.0 VDC	4700	-	-	-	2000	3900	-
	+12 / –12 / +15 / –15 VDC	260	-	-	1000	1500	1500	-
Triple output models:	3.3 / 5.0 VDC	-	-	-	-	2200	2200	-
	+12 / –12 / +15 / –15 VDC	-	-	-	-	1500	1500	-

All specifications valid at nominal input voltage, full load and +25°C after warm-up time unless otherwise stated.

General Specifications

Temperature ranges	– Operating	TMPM 04 models:	**–25°C to +60°C** (no derating)
		TMP 10 models:	**–25°C to +50°C** (no derating)
		other models:	**–25°C to +70°C** (with derating)
	– Storage (non-operating)		**–40°C to +85°C**
Power derating			**3.3 %/K above +50°C to +65°C** **5.0 %/K above +65°C to +70°C** (no derating approved for TMPM04 and TMP10 models)
Over temperature protection			**at 90°C** (automatic recovery at 67°C)
Temperature coefficient			**0.02 %/K**
Humidity (non-condensing)			**95 % rel. H max.**
Altitude during operation		TMP 07 models:	**5'000 m max.**
		TMP 15(C) models:	**2'000 m max.**
		TMP 30(C) models:	**2'000 m max.** (4'000 m single output models)
		TMP 60(C) models:	**3'000 m max.**
		TMPM 04 & TMPM 10 models:	**5'000 m max.**
Switching frequency			**100 kHz typ.** fixed
Isolation voltage (60 sec.)	– Input/Output		**3'000 VAC**
Isolation resistance	– Input/Output		**100 MOhm** (at 500 VDC)
Working voltage (rated)			**250 VAC**
Electromagnetic compatibility (EMC), Emissions			**EN 61000-6-3** **EN 61000-6-4** **EN 61204-3: 2000, class A** **EN 55011, EN 55032, FCC part 15: class B**
Electromagnetic compatibility (EMC), Immunity			**EN 55024 & EN 55035** **EN 61000-6-2: 2005** **EN 61204-3: 2000, class A**
	– Electrostatic discharge ESD		**EN 61000-4-2 8 kV / 4 kV, criteria B**
	– RF field susceptibility		**EN 61000-4-3 10 V/m, criteria A**
	– Electrical fast transient / burst immunity input		**EN 61000-4-4 ±2 kV, criteria B**
	– Electrical fast transient / burst immunity output		**EN 61000-4-4 ±2 kV, criteria B**
	– Surge immunity line – neutral		**EN 61000-4-5, ±1 kV, criteria B**
	– Surge immunity output		**EN 61000-4-5 ±0.5 kV, criteria B**
	– Immunity to conducted RF disturbances		**EN 61000-4-6 10 V, criteria B**
	– Mains voltage dips and interruptions		**EN 61000-4-11 30 % 10 ms, criteria B** **60 % 100 ms, criteria C** **95 % 5000 ms, criteria C**
EMC test certificates			www.tracopower.com/overview/tmp
Protection class II			**to IEC/EN 60536**
Safety standards	– Information technology equipment		**IEC/EN 60950-1, UL 60950-1**
		except TMP 10 models:	**IEC/EN 62368-1, UL 62368-1**
	– Industrial control equipment		**UL/cUL 508** (chassis mount single and symetric dual output models only)
Safety approvals	– CB certificate for IEC 62368-1		www.tracopower.com/overview/tmp
Reliability /calculated MTBF (MIL-HDBK-217F, at +25°C, ground benign)		TMP 07, TMPM 04 & 10 models:	**>330'000 h**
		TMP 10 models:	**>300'000 h**
		TMP 15 models:	**>280'000 h**
		TMP 30 models:	**>250'000 h**
		TMP 60 models:	**>125'000 h**
Casing material			**plastic resin + fiberglass** (UL 94V-0 rated)
Soldering Profile		except TMP 15C, TMP 30C, TMP 60C:	**Lead-Free Wave Soldering** **260°C / 10 s max.**
Environmental compliance	– Reach		www.tracopower.com/products/reach-declaration.pdf
	– RoHS		**RoHS directive 2011/65/EU**

All specifications valid at nominal input voltage, full load and +25°C after warm-up time unless otherwise stated.

Outline Dimensions

TMPM 04 models:

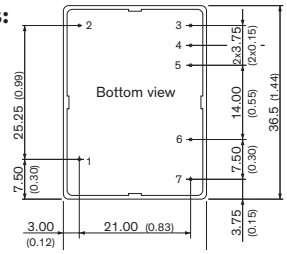

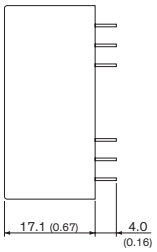

All dimensions in mm (inch)
Tolerance: ±0.5 (±0.01)
Pin pitch tolerance: ±0.25 (±0.01)
Pin ∅ 0.6 ±0.1 (∅ 0.02 ±0.004)
Weight: 26 g (0.92 oz)

Pinout		
Pin	Single	Dual
1	NC	
2	NC	
3	+Vout	Vout 1
4	–Vout	com.1/2
5	No Pin	Vout 2
6	AC (N)	
7	AC (L)	

(NC = not connected)

TMP 07 models:

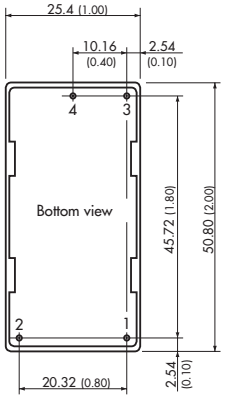

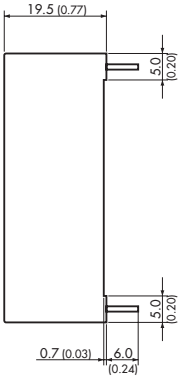

Pinout	
Pin	Single
1	AC (N)
2	AC (L)
3	+Vout
4	–Vout

All dimension in mm (inch)
Max Screw penetration: 5.5 (0.21)
Tolerance: ±0.5 (±0.02)
Pin diameter: 1.0 ±0.1 (0.04 ±0.004)
Pin pitch tolerance: ±0.25 (±0.01)
Weight: 44 g (1.55 oz)

TMPM 10 models:

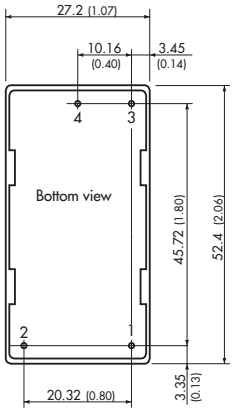

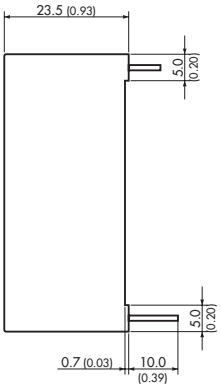

Pinout	
Pin	Single
1	AC (N)
2	AC (L)
3	+Vout
4	–Vout

Pin diameter: 1.0 (0.04)
Weight: 54 g (1.90 oz)

TMP 10 models:

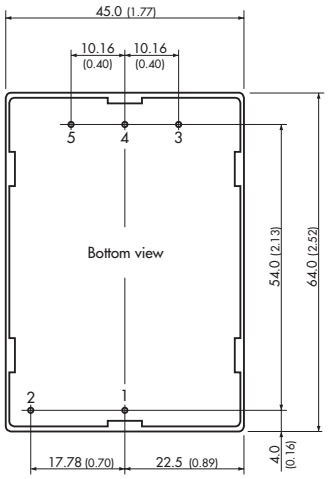

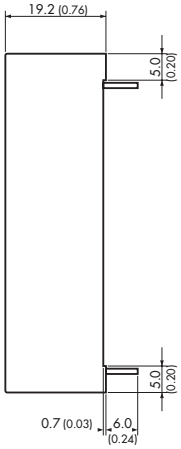

Pinout		
Pin	Single	Dual
1	AC (N)	AC (N)
2	AC (L)	AC (L)
3	–Vout	Vout 2
4	NC	com.1/2
5	+Vout	Vout 1

(NC = not connected)

Pin diameter: 1.0 (0.04)
Weight: 92 g (3.25 oz)

Dimensions in [mm], ( ) = Inches
Case tolerances: ±0.5 (±0.02)
Pin pich tolerance: ±0.25 (±0.01)

Outline Dimensions

TMP 15 models for PCB mount:

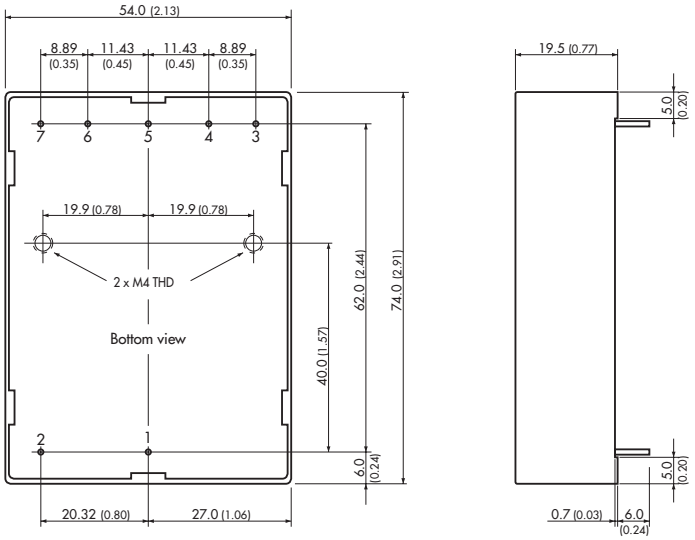

Pinout				
Pin	**Single**	**Dual sym.**	**Dual asym.**	**Triple**
1	AC (N)			
2	AC (L)			
3	No Pin			Vout 3
4	–Vout	Vout 2	–Vout 2	com.2/3
5	no pin	com.1/2	+Vout 2	Vout 2
6	+Vout	Vout 1	–Vout 1	–Vout 1
7	No Pin		+Vout 1	+Vout 1

All dimension in mm (inch)
Max Screw penetration: 5.5 (0.21)
Tolerance: ±0.5 (±0.02)
Pin diameter: 1.0 ±0.1 (0.04 ±0.004)
Pin pitch tolerance: ±0.25 (±0.01)
Weight: 135 g (4.76 oz)

TMP 15 models for chassis mount:

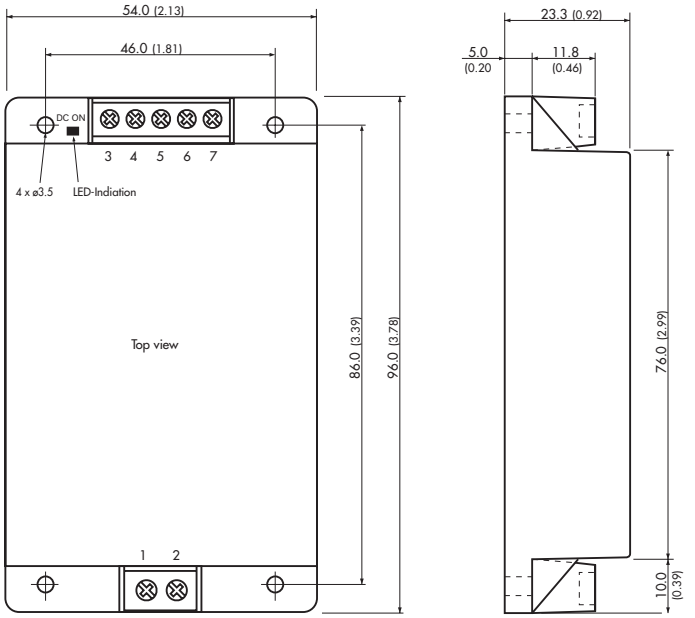

Connection				
Pin	**Single**	**Dual sym.**	**Dual asym.**	**Triple**
1	AC (N)			
2	AC (L)			
3	NC			Vout 3
4	–Vout	Vout 2	–Vout 2	com.2/3
5	NC	com.1/2	+Vout 2	Vout 2
6	+Vout	Vout 1	–Vout 1	–Vout 1
7	NC		+Vout 1	+Vout 1

(NC = not connected)

Terminal screw locked torque: 0.5 Nm max.

Weight: 132 g (4.66 oz)

Dimensions in [mm], ( ) = Inches
Case tolerances: ±0.5 (±0.02)
Pin pich tolerance: ±0.25 (±0.01)
Mounting hole tolerance: ±0.5 (±0.02)
Mounting screw locked torque: 0.49 Nm max.

Outline Dimensions

TMP 30 models for PCB mount:

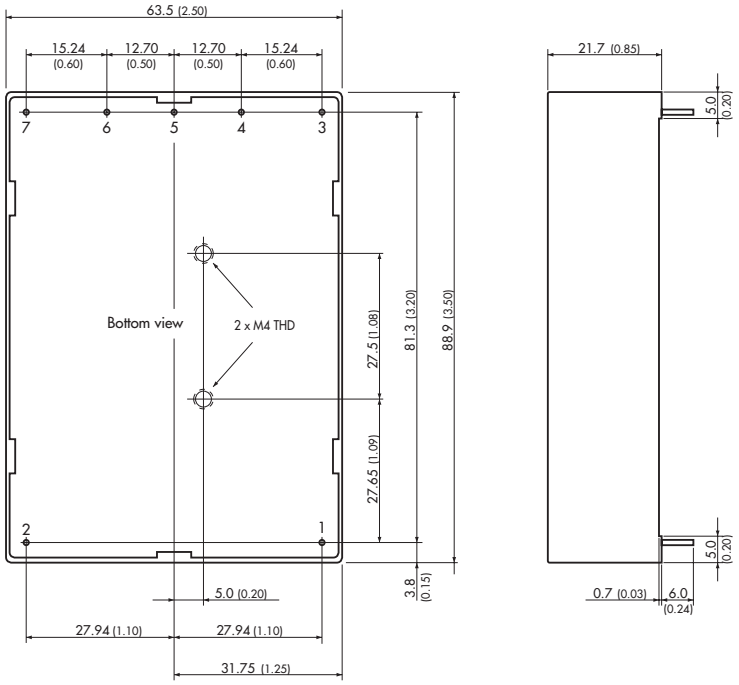

Pinout				
Pin	**Sin-gle**	**Dual sym.**	**Dual asym.**	**Triple**
1	AC (N)			
2	AC (L)			
3	+Vout	Vout 1	+Vout 2	Vout 2
4	No Pin		+Vout 1	+Vout 1
5	–Vout	com 1/2	–Vout 2	com 2/3
6	No Pin		–Vout 1	–Vout 1
7	NC	Vout 2	NC	Vout 3

(NC = not connected)

All dimension in mm (inch)
Max Screw penetration: 5.5 (0.21)
Tolerance: ±0.5 (±0.02)
Pin diameter: 1.0 ±0.1 (0.04 ±0.004)
Pin pitch tolerance: ±0.25 (±0.01)
Weight: 211 g (7.44 oz)

TMP 30 models for chassis mount:

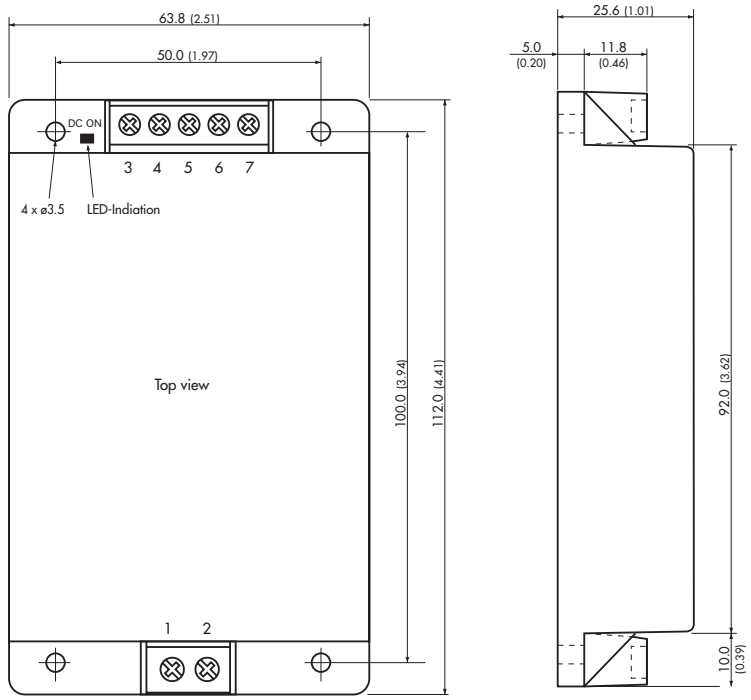

Connection				
Pin	**Single**	**Dual sym.**	**Dual asym.**	**Triple**
1	AC (N)			
2	AC (L)			
3	+Vout	Vout 1	+Vout 2	Vout 2
4	NC		+Vout 1	+Vout 1
5	–Vout	com 1/2	–Vout 2	com 2/3
6	NC		–Vout 1	–Vout 1
7	NC	Vout 2	NC	Vout 3

(NC = not connected)

Terminal screw locked torque: 0.5 Nm max.

Weight: 208 g (7.34 oz)

Dimensions in [mm], ( ) = Inches
Case tolerances: ±0.5 (±0.02)
Pin pich tolerance: ±0.25 (±0.01)
Mounting hole tolerance: ±0.5 (±0.02)
Mounting screw locked torque: 0.49 Nm max.

Outline Dimensions

TMP 60 models for PCB mount:

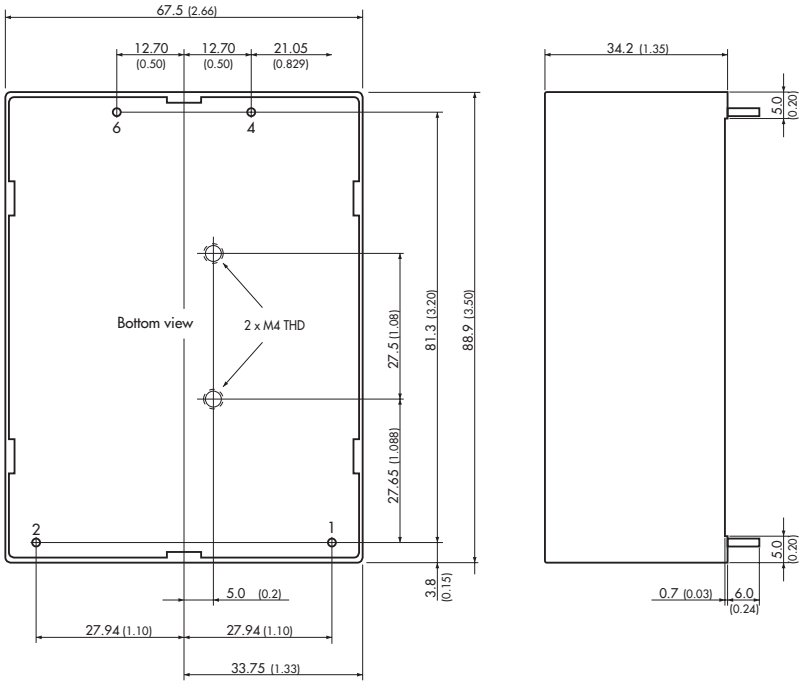

Pinout	
Pin	**Single**
1	AC (N)
2	AC (L)
3	No Pin
4	+Vout
6	–Vout
7	No Pin

Max Screw penetration: 5.5 (0.21)
Pin diameter: 1.0 (0.04)
Pin pitch tolerance: ±0.25 (±0.01)
Weight: 345 g (12.17 oz)

TMP 60 models for chassis mount:

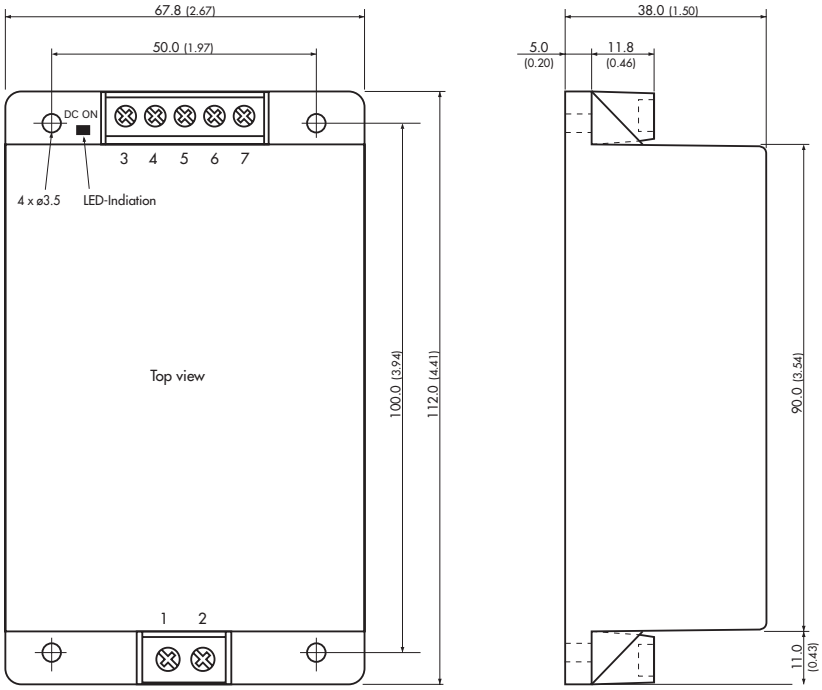

Connection	
Pin	**Single**
1	AC (N)
2	AC (L)
3	NC
4	+Vout
5	NC
6	–Vout
7	NC

(NC = not connected)

Terminal screw locked torque: 0.5 Nm max.

Weight: 332 g (11.71 oz)

Dimensions in [mm], ( ) = Inches
Case tolerances: ±0.5 (±0.02)
Mounting hole tolerance: ±0.5 (±0.02)
Mounting screw locked torque: 0.49 Nm max.

DIN-Rail Mounting Kit

Adapter for mounting on DIN-rails as per EN 50022-35 (snap-on mounting)

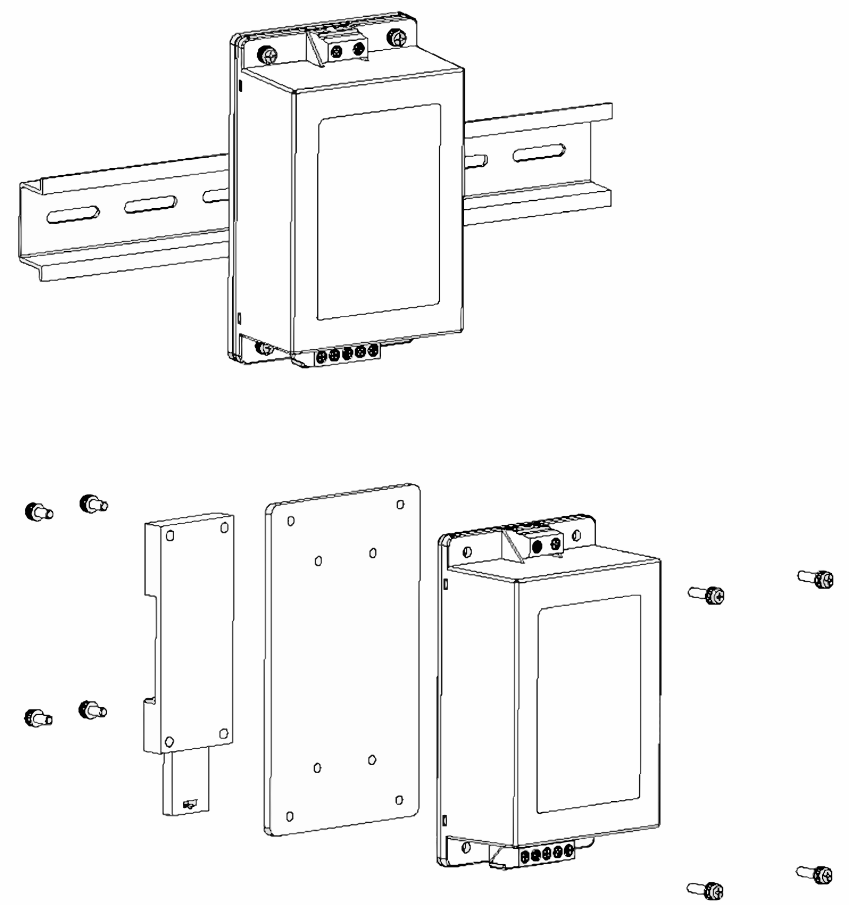

DIN-Rail Mounting Kit		
Order code	**For model**	**Weight**
TMP-MK1	TMP 15xxxC	186 g (6.56 oz)
TMP-MK2	TMP 30xxxC	262 g (9.24 oz)
	TMP 60xxxC	386 g (13.62 oz)

Kit contains interface plate, DIN-rail clip and necessary screws.