1.8V, Resistor-Programmable TEMPERATURE SWITCH and ANALOG OUT TEMPERATURE SENSOR in SC70

Check for Samples: TMP300B-Q1

FEATURES

- **ACCURACY: ±1°C (typical at +25°C)**
- **PROGRAMMABLE TRIP POINT**
- **PROGRAMMABLE HYSTERESIS: 5°C/10°C**
- **OPEN-DRAIN OUTPUTS**
- **LOW-POWER: 110µA (max)**
- **WIDE VOLTAGE RANGE: +1.8V to +18V**
- **OPERATION: –40°C to +150°C**
- **ANALOG OUT: 10mV/°C**
- **SC70-6 PACKAGE**

APPLICATIONS

- **QUALIFIED FOR for AUTOMOTIVE APPLICATIONS**
- **POWER-SUPPLY SYSTEMS**
- **DC-DC MODULES**
- **THERMAL MONITORING**
- **ELECTRONIC PROTECTION SYSTEMS**

DESCRIPTION

The TMP300B-Q1 is a low-power, resistor-programmable, digital output temperature switch. It allows a threshold point to be set by adding an external resistor. Two levels of hysteresis are available. The TMP300B-Q1 has a V_{TEMP} analog output that can be used as a testing point or in temperature-compensation loops.

With a supply voltage as low as 1.8V and low current consumption, the TMP300B-Q1 is ideal for power-sensitive systems.

Available in two micropackages that have proven thermal characteristics, this part gives a complete and simple solution for users who need simple and reliable thermal management.

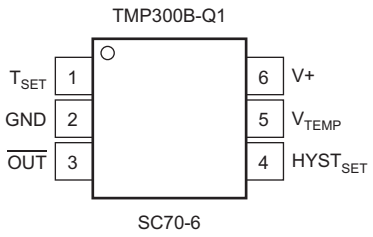

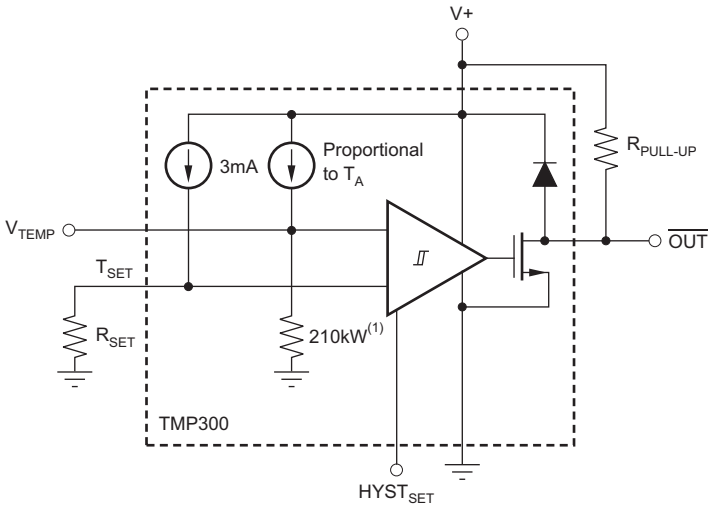

NOTE: (1) Thinfilm resistor with approximately 10% accuracy; however, this accuracy error is trimmed out at the factory.

Please be aware that an important notice concerning availability, standard warranty, and use in critical applications of Texas Instruments semiconductor products and disclaimers thereto appears at the end of this data sheet.

All trademarks are the property of their respective owners.

PRODUCTION DATA information is current as of publication date. Products conform to specifications per the terms of the Texas Instruments standard warranty. Production processing does not necessarily include testing of all parameters.

Copyright © 2011, Texas Instruments Incorporated

This integrated circuit can be damaged by ESD. Texas Instruments recommends that all integrated circuits be handled with appropriate precautions. Failure to observe proper handling and installation procedures can cause damage.

ESD damage can range from subtle performance degradation to complete device failure. Precision integrated circuits may be more susceptible to damage because very small parametric changes could cause the device not to meet its published specifications.

ORDERING INFORMATION(1)

ORDERABLE P/N	T_A	PACKAGE	TOP SIDE SYMBOL
TMP300BQDCKRQ1 or TMP300B-Q1	-40°C to 125°C	SC70 - DCK | Reel of 3000	SBG

(1) For the most current package and ordering information see the Package Option Addendum at the end of this document, or see the TI web site at www.ti.com.

ABSOLUTE MAXIMUM RATINGS(1)

		VALUE	UNIT
Supply Voltage	V+	+18	V
Signal Input Terminals, Voltage(2)		–0.5 to (V+) + 0.5	V
Signal Input Terminals, Current(2)		±10	mA
Output Short-Circuit(3)	I_{SC}	Continuous	
Open-Drain Output		(V+) + 0.5	V
Operating Temperature	T_A	–40 to +150	°C
Storage Temperature	T_A	–55 to +150	°C
Junction Temperature	T_J	+150	°C
ESD Rating	Human Body Model (HBM)	4000	V
	Charged Device Model (CDM)	1000	V
	Machine Model (MM)	200	V

(1) Stresses above these ratings may cause permanent damage. Exposure to absolute maximum conditions for extended periods may degrade device reliability. These are stress ratings only, and functional operation of the device at these or any other conditions beyond those specified is not supported.
(2) Input terminals are diode-clamped to the power-supply rails. Input signals that can swing more than 0.5V beyond the supply rails should be current limited to 10mA or less.
(3) Short-circuit to ground.

Copyright © 2011, Texas Instruments Incorporated

ELECTRICAL CHARACTERISTICS

At V_S = 3.3V and T_A = –40°C to +125°C, unless otherwise noted.

PARAMETER	TEST CONDITIONS	TMP300B-Q1 MIN	TMP300B-Q1 TYP	TMP300B-Q1 MAX	UNIT
TEMPERATURE MEASUREMENT					
Measurement Range	V_S = 2.35V to 18V	–40		+125	°C
	V_S = 1.8V to 2.35V	–40		100 × (V_S – 0.95)	°C
TRIP POINT					
Total Accuracy	T_A = –40°C to +125°C		±2	±6	°C
R_{SET} Equation	T_C is in °C		R_{SET} = 10 (50 + T_C)/3		kΩ
HYSTERESIS SET INPUT					
LOW Threshold (1)				0.4	V
HIGH Threshold (1)		V_S – 0.4			V
Threshold Hysteresis	$HYST_{SET}$ = GND		5		°C
	$HYST_{SET}$ = V_S		10		°C
DIGITAL OUTPUT					
Logic Family			CMOS		
Open-Drain Leakage Current (1)	OUT = V_S			10	µA
Logic Levels					
V_{OL}	V_S = 1.8V to 18V, I_{SINK} = 5mA			0.3	V
ANALOG OUTPUT					
Accuracy			±2	±5	°C
Temperature Sensitivity			10		mV/°C
Output Voltage (1)	T_A = +25°C	720	750	780	mV
V_{TEMP} Pin Output Resistance			210		kΩ
POWER SUPPLY					
Quiescent Current (2) I_Q	V_S = 1.8V to 18V, T_A = –40°C to +125°C			110	µA
TEMPERATURE RANGE					
Specified Range T_A	V_S = 2.35V to 18V	–40		+125	°C
	V_S = 1.8V to 2.35V	–40		100 × (V_S – 0.95)	°C
Operating Range T_A	V_S = 2.35V to 18V	–40		+150	°C
	V_S = 1.8V to 2.35V	–50		100 × (V_S – 0.95)	°C
Thermal Resistance θ_{JA}					
SC70			250		°C/W
SOT23-6			180		°C/W

(1) Specified by design. Not production tested.
(2) See Figure 1 for typical quiescent current.

Copyright © 2011, Texas Instruments Incorporated

TYPICAL CHARACTERISTICS

At V_S = 5V, unless otherwise noted.

QUIESCENT CURRENT OVER TEMPERATURE AND SUPPLY

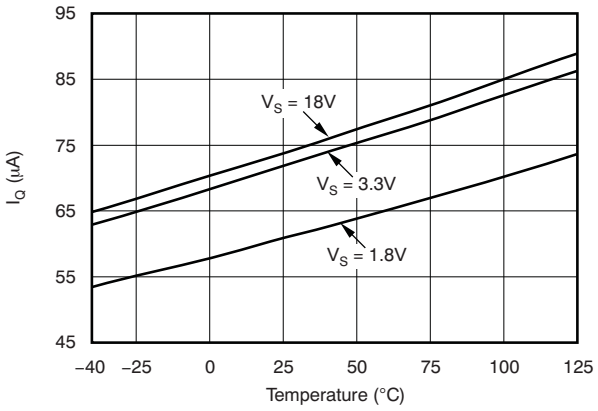

Figure 1.

R_{SET} SHIFT DUE TO R_{SET} TOLERANCE

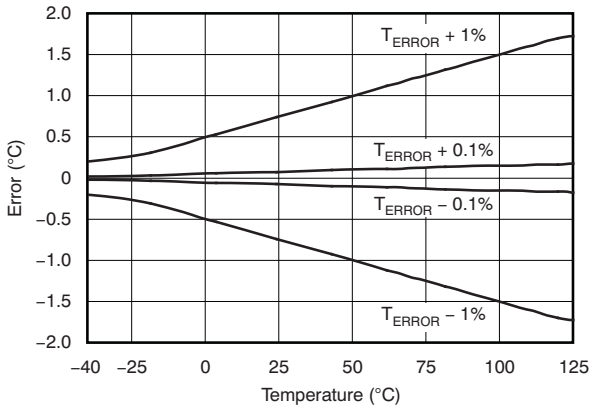

Figure 2.

R_{SET} vs TEMPERATURE

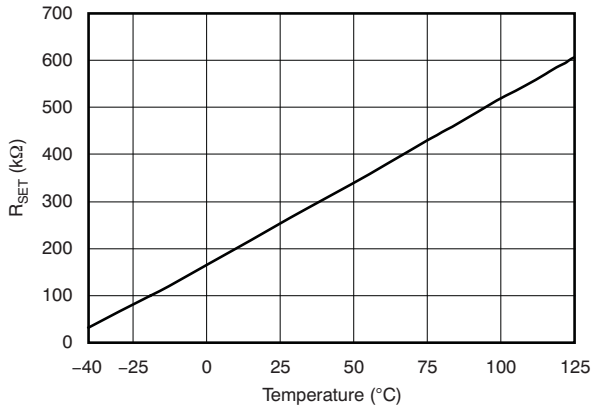

Figure 3.

TYPICAL TRIP ERROR

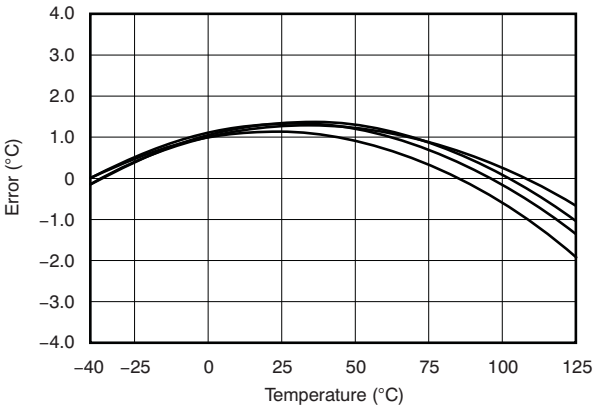

Figure 4.

TYPICAL ANALOG OUTPUT ERROR

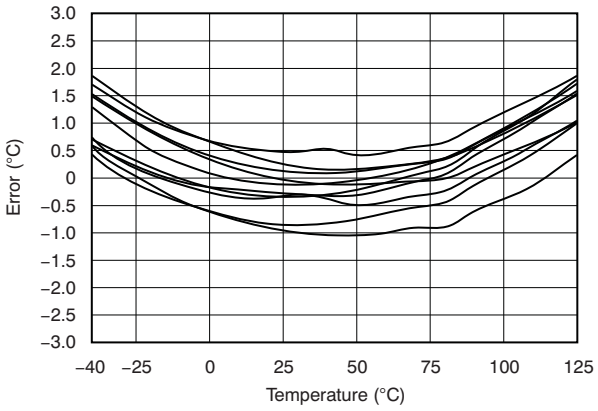

Figure 5.

ANALOG PSR OVER TEMPERATURE

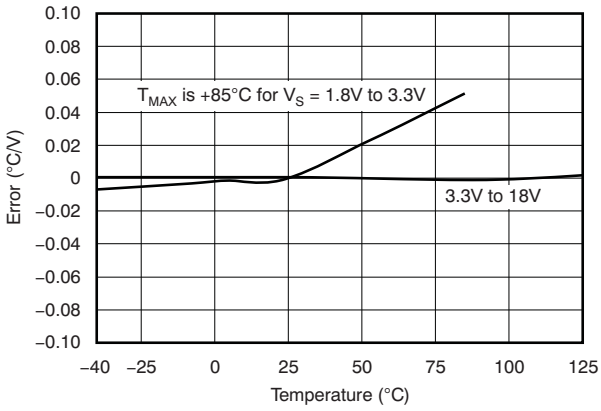

Figure 6.

Copyright © 2011, Texas Instruments Incorporated

TYPICAL CHARACTERISTICS (continued)

At V_S = 5V, unless otherwise noted.

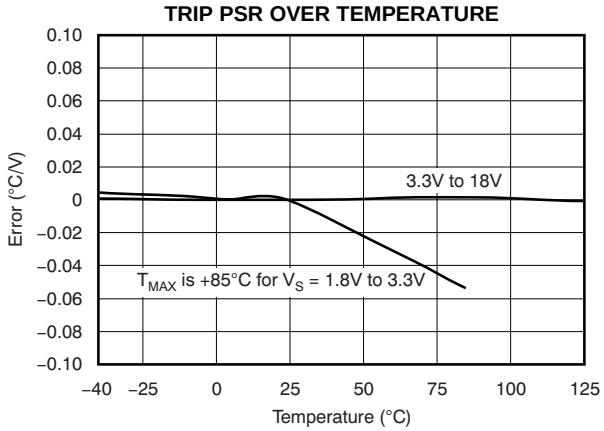

Figure 7.

APPLICATIONS INFORMATION

The TMP300B-Q1 is a thermal sensor designed for over-temperature protection circuits in electronic systems. The TMP300B-Q1 uses a set resistor to program the trip temperature of the digital output. An additional high-impedance (210kΩ) analog voltage output provides the temperature reading.

CALCULATING R_{SET}

The set resistor (R_{SET}) provides a threshold voltage for the comparator input. The TMP300B-Q1 trips when the V_{TEMP} pin exceeds the T_{SET} voltage. The value of the set resistor is determined by the analog output function and the 3µA internal bias current.

To set the TMP300B-Q1 to trip at a preset value, calculate the R_{SET} resistor value according to Equation 1 or Equation 2:

$$R_{SET} = \frac{(T_{SET} \times 0.01 + 0.5)}{3e^{-6}} \quad (1)$$

Where T_{SET} is in °C; or

$$R_{SET} \text{ in } k\Omega = \frac{10(50 + T_{SET})}{3} \quad (2)$$

Where T_{SET} is in °C.

USING V_{TEMP} TO TRIP THE DIGITAL OUTPUT

The analog voltage output can also serve as a voltage input that forces a trip of the digital output to simulate a thermal event. This simulation facilitates easy system design and test of thermal safety circuits, as shown in Figure 8.

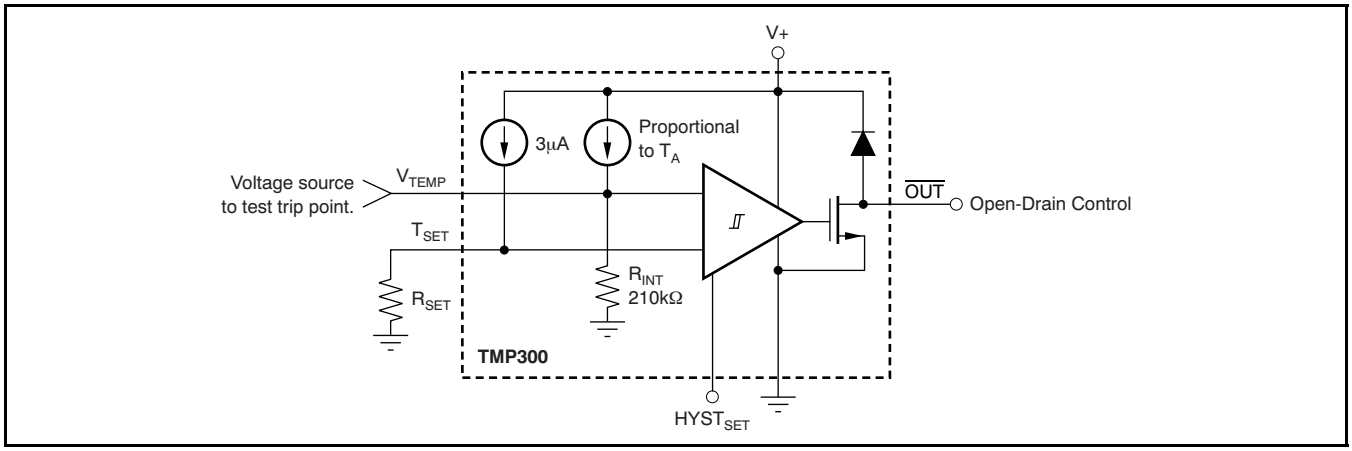

Figure 8. Applying Voltage to Trip Digital Output

Copyright © 2011, Texas Instruments Incorporated

ANALOG TEMPERATURE OUTPUT

The analog out or V_{TEMP} pin is high-impedance (210kΩ). Avoid loading this pin to prevent degrading the analog out value or trip point. Buffer the output of this pin when using it for direct thermal measurement. Figure 9 shows buffering of the analog output signal.

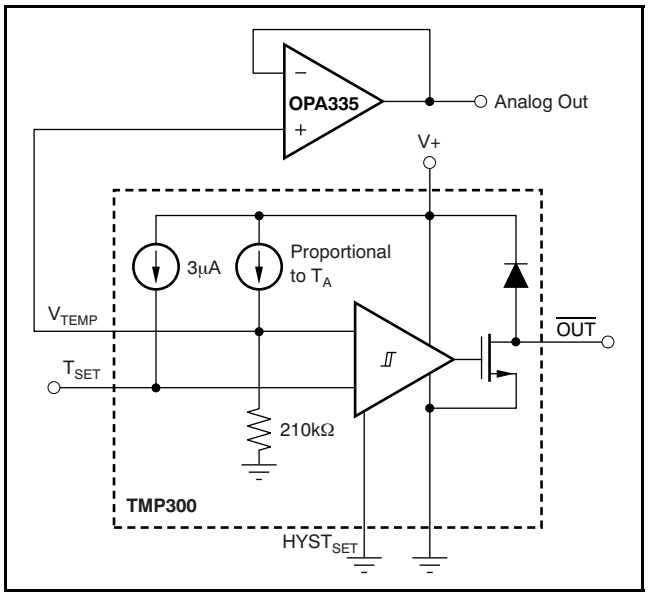

Figure 9. Buffering the Analog Output Signal

USING A DAC TO SET THE TRIP POINT

The trip point is easily converted by changing the digital-to-analog converter (DAC) code. This technique can be useful for control loops where a large thermal mass is being brought up to the set temperature and the $\overline{OUT}$ pin is used to control the heating element. The analog output can be monitored in a control algorithm that adjusts the set temperature to prevent overshoot. Trip set voltage error versus temperature is shown in Figure 10, which shows error in °C of the comparator input over temperature. An alternative method of setting the trip point by using a DAC is shown in Figure 11.

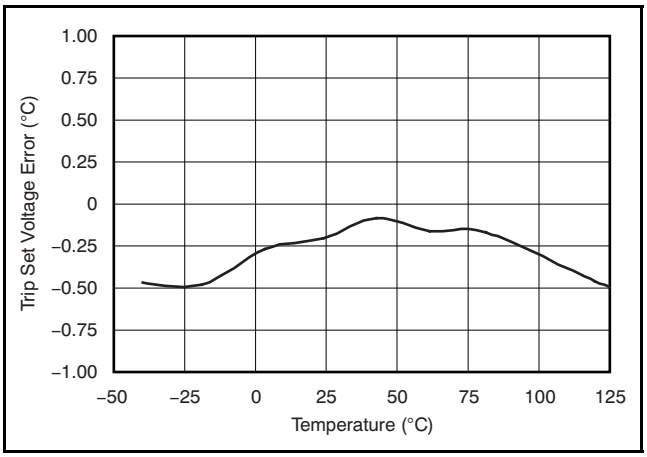

Figure 10. Trip Set Voltage Error vs Temperature

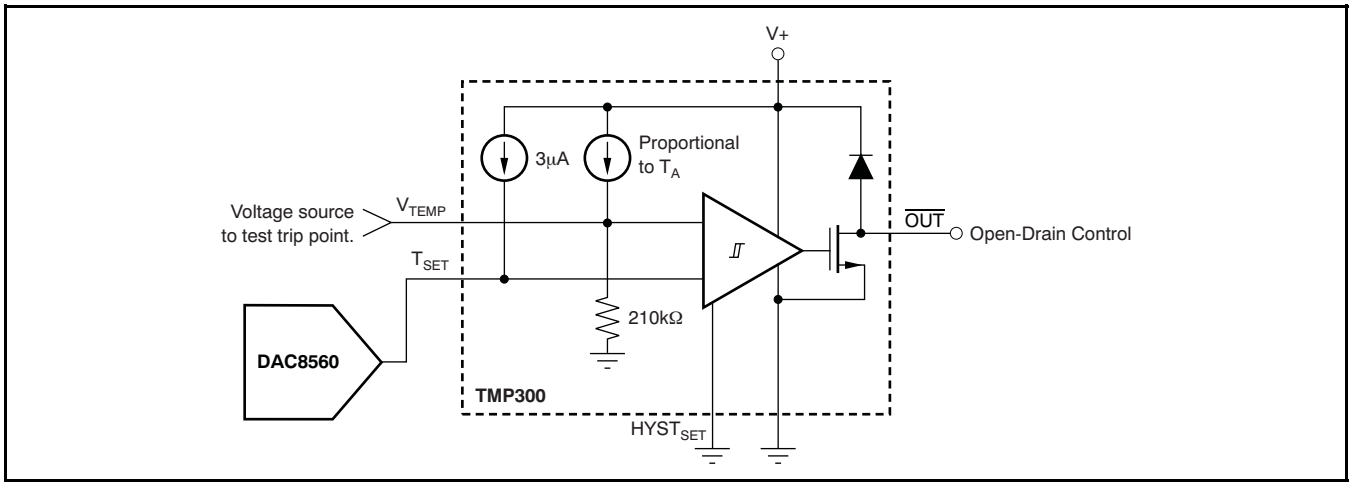

Figure 11. DAC Generates the Voltage-Driving T_{SET} Pin

HYSTERESIS

The hysteresis pin has two settings. Grounding $HYST_{SET}$ results in 5°C of hysteresis. Connecting it to V_S results in 10°C of hysteresis. Hysteresis error variation over temperature is shown in Figure 12 and Figure 13.

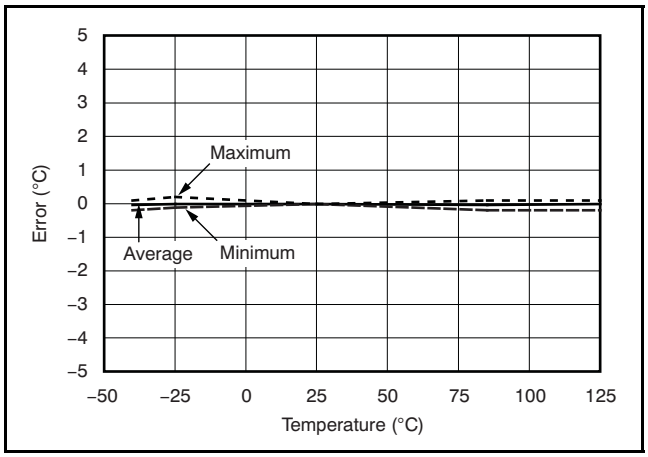

Figure 12. 5°C Hysteresis Error vs Temperature

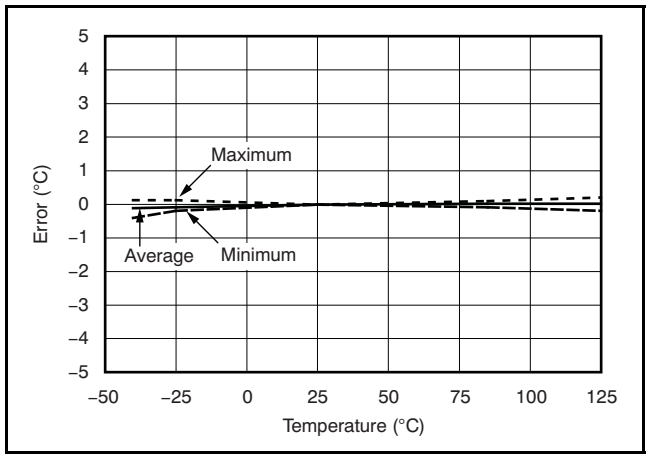

Figure 13. 10°C Hysteresis Error vs Temperature

Bypass capacitors should be used on the supplies as well as on the R_{SET} and analog out (V_{TEMP}) pins when in noisy environments, as shown in Figure 14. These capacitors reduce premature triggering of the comparator.

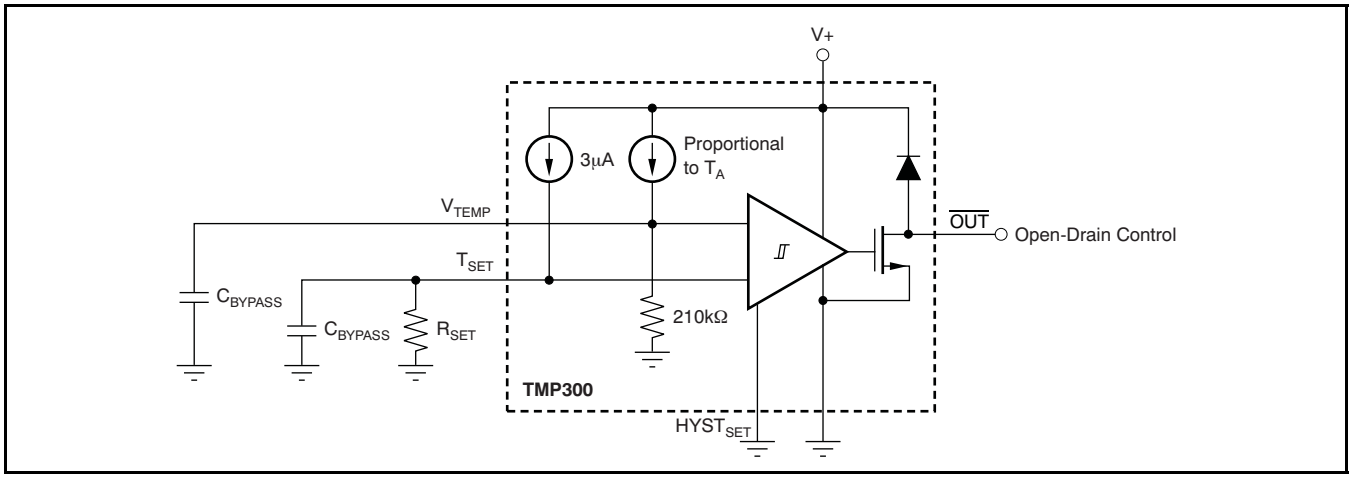

Figure 14. Bypass Capacitors Prevent Early Comparator Toggling Due to Circuit Board Noise

Copyright © 2011, Texas Instruments Incorporated

PACKAGING INFORMATION

Orderable part number	Status (1)	Material type (2)	Package | Pins	Package qty | Carrier	RoHS (3)	Lead finish/ Ball material (4)	MSL rating/ Peak reflow (5)	Op temp (°C)	Part marking (6)
TMP300BQDCKRQ1	Active	Production	SC70 (DCK) | 6	3000 | LARGE T&R	Yes	NIPDAU	Level-1-260C-UNLIM	-40 to 125	SBG
TMP300BQDCKRQ1.A	Active	Production	SC70 (DCK) | 6	3000 | LARGE T&R	Yes	NIPDAU	Level-1-260C-UNLIM	-40 to 125	SBG

(1) **Status:** For more details on status, see our product life cycle.

(2) **Material type:** When designated, preproduction parts are prototypes/experimental devices, and are not yet approved or released for full production. Testing and final process, including without limitation quality assurance, reliability performance testing, and/or process qualification, may not yet be complete, and this item is subject to further changes or possible discontinuation. If available for ordering, purchases will be subject to an additional waiver at checkout, and are intended for early internal evaluation purposes only. These items are sold without warranties of any kind.

(3) **RoHS values:** Yes, No, RoHS Exempt. See the TI RoHS Statement for additional information and value definition.

(4) **Lead finish/Ball material:** Parts may have multiple material finish options. Finish options are separated by a vertical ruled line. Lead finish/Ball material values may wrap to two lines if the finish value exceeds the maximum column width.

(5) **MSL rating/Peak reflow:** The moisture sensitivity level ratings and peak solder (reflow) temperatures. In the event that a part has multiple moisture sensitivity ratings, only the lowest level per JEDEC standards is shown. Refer to the shipping label for the actual reflow temperature that will be used to mount the part to the printed circuit board.

(6) **Part marking:** There may be an additional marking, which relates to the logo, the lot trace code information, or the environmental category of the part.

Multiple part markings will be inside parentheses. Only one part marking contained in parentheses and separated by a "~" will appear on a part. If a line is indented then it is a continuation of the previous line and the two combined represent the entire part marking for that device.

Important Information and Disclaimer: The information provided on this page represents TI's knowledge and belief as of the date that it is provided. TI bases its knowledge and belief on information provided by third parties, and makes no representation or warranty as to the accuracy of such information. Efforts are underway to better integrate information from third parties. TI has taken and continues to take reasonable steps to provide representative and accurate information but may not have conducted destructive testing or chemical analysis on incoming materials and chemicals. TI and TI suppliers consider certain information to be proprietary, and thus CAS numbers and other limited information may not be available for release.

In no event shall TI's liability arising out of such information exceed the total purchase price of the TI part(s) at issue in this document sold by TI to Customer on an annual basis.

OTHER QUALIFIED VERSIONS OF TMP300-Q1 :

- Catalog : TMP300

NOTE: Qualified Version Definitions:

- Catalog - TI's standard catalog product

TAPE AND REEL INFORMATION

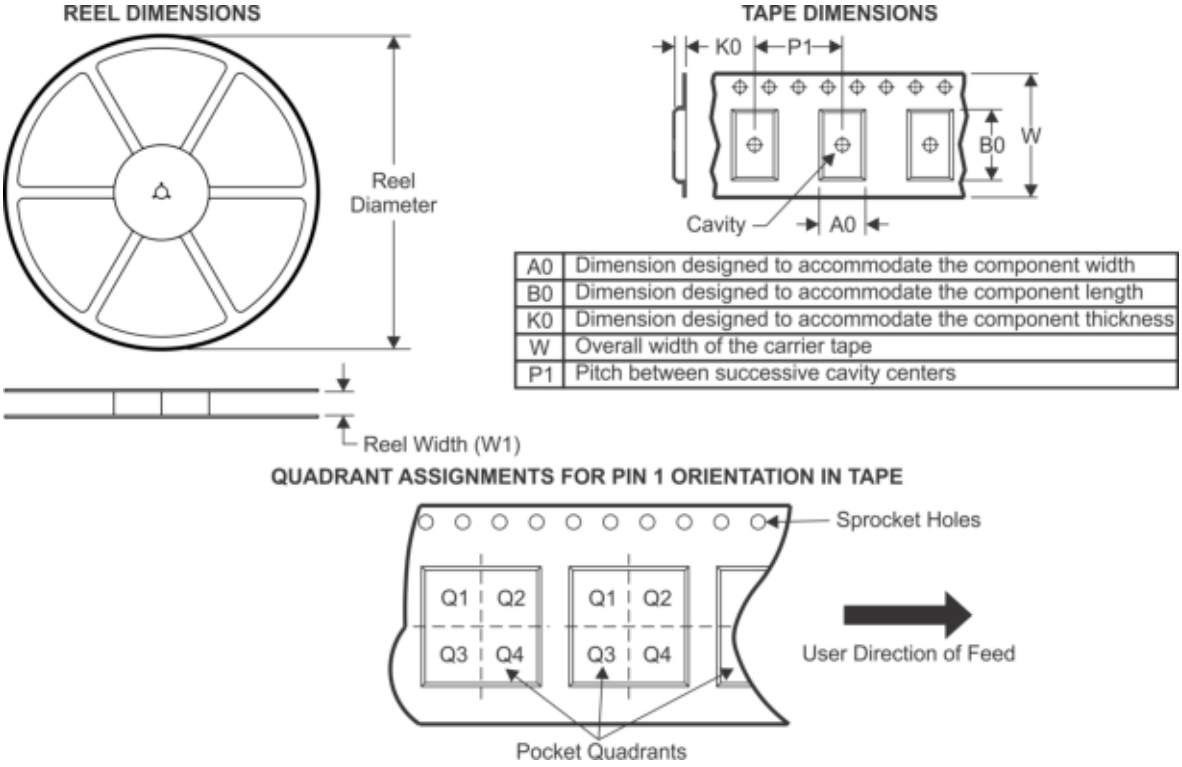

A0	Dimension designed to accommodate the component width
B0	Dimension designed to accommodate the component length
K0	Dimension designed to accommodate the component thickness
W	Overall width of the carrier tape
P1	Pitch between successive cavity centers

*All dimensions are nominal

Device	Package Type	Package Drawing	Pins	SPQ	Reel Diameter (mm)	Reel Width W1 (mm)	A0 (mm)	B0 (mm)	K0 (mm)	P1 (mm)	W (mm)	Pin1 Quadrant
TMP300BQDCKRQ1	SC70	DCK	6	3000	179.0	8.4	2.2	2.5	1.2	4.0	8.0	Q3

TAPE AND REEL BOX DIMENSIONS

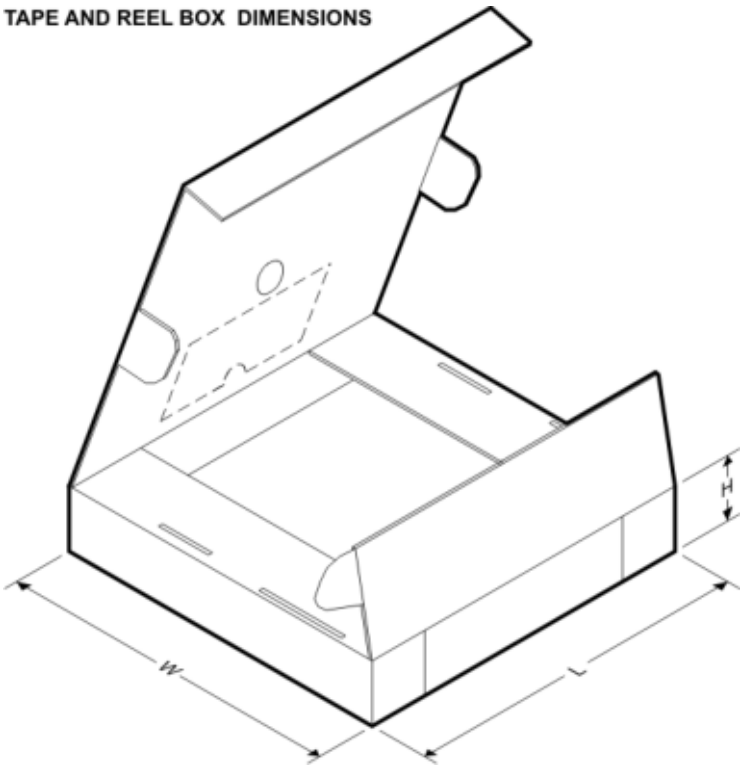

*All dimensions are nominal

Device	Package Type	Package Drawing	Pins	SPQ	Length (mm)	Width (mm)	Height (mm)
TMP300BQDCKRQ1	SC70	DCK	6	3000	200.0	183.0	25.0

PACKAGE OUTLINE

DCK0006A

SOT - 1.1 max height

SMALL OUTLINE TRANSISTOR

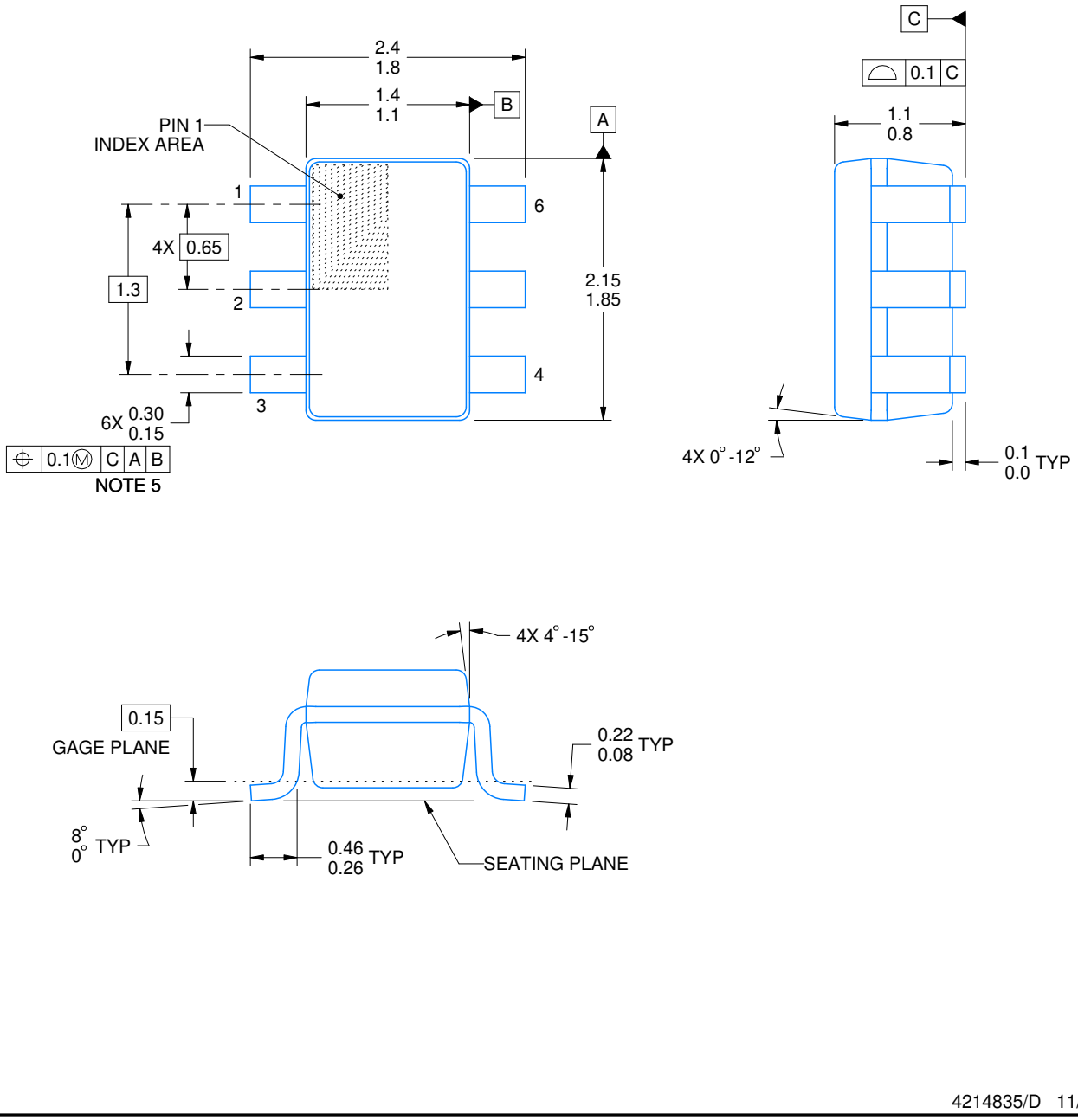

4214835/D 11/2024

NOTES:

1. All linear dimensions are in millimeters. Any dimensions in parenthesis are for reference only. Dimensioning and tolerancing per ASME Y14.5M.
2. This drawing is subject to change without notice.
3. Body dimensions do not include mold flash or protrusion. Mold flash and protrusion shall not exceed 0.15 per side.
4. Falls within JEDEC MO-203 variation AB.

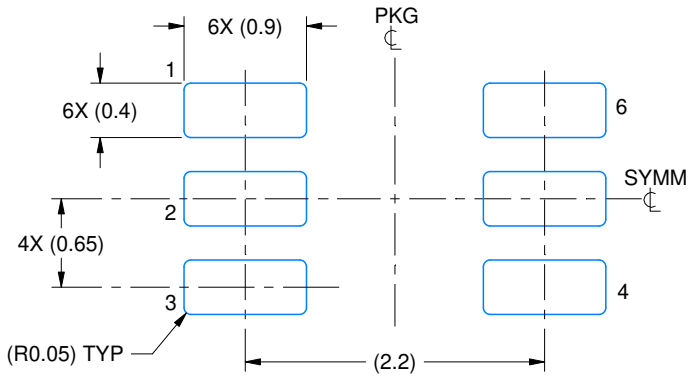

LAND PATTERN EXAMPLE
EXPOSED METAL SHOWN
SCALE:18X

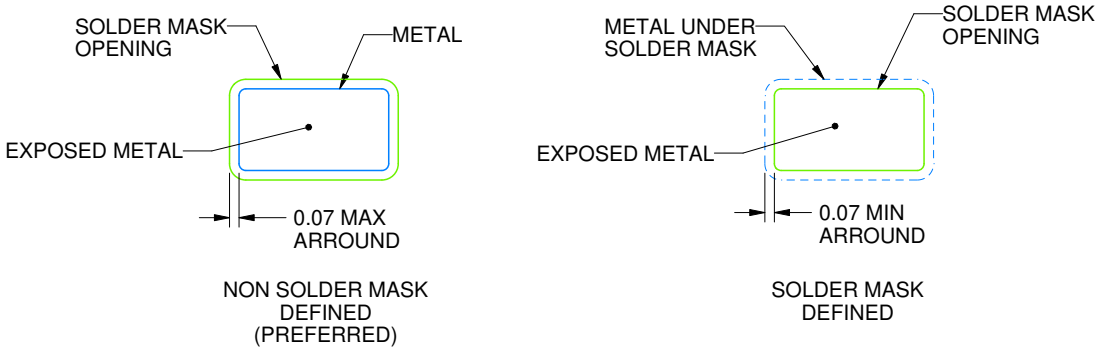

SOLDER MASK DETAILS

4214835/D 11/2024

NOTES: (continued)

5. Publication IPC-7351 may have alternate designs.
6. Solder mask tolerances between and around signal pads can vary based on board fabrication site.

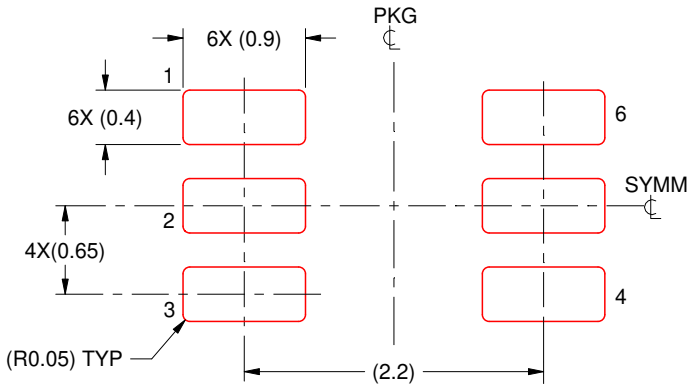

SOLDER PASTE EXAMPLE
BASED ON 0.125 THICK STENCIL
SCALE:18X

4214835/D 11/2024

NOTES: (continued)

7. Laser cutting apertures with trapezoidal walls and rounded corners may offer better paste release. IPC-7525 may have alternate design recommendations.
8. Board assembly site may have different recommendations for stencil design.

IMPORTANT NOTICE AND DISCLAIMER

TI PROVIDES TECHNICAL AND RELIABILITY DATA (INCLUDING DATASHEETS), DESIGN RESOURCES (INCLUDING REFERENCE DESIGNS), APPLICATION OR OTHER DESIGN ADVICE, WEB TOOLS, SAFETY INFORMATION, AND OTHER RESOURCES “AS IS” AND WITH ALL FAULTS, AND DISCLAIMS ALL WARRANTIES, EXPRESS AND IMPLIED, INCLUDING WITHOUT LIMITATION ANY IMPLIED WARRANTIES OF MERCHANTABILITY, FITNESS FOR A PARTICULAR PURPOSE OR NON-INFRINGEMENT OF THIRD PARTY INTELLECTUAL PROPERTY RIGHTS.

These resources are intended for skilled developers designing with TI products. You are solely responsible for (1) selecting the appropriate TI products for your application, (2) designing, validating and testing your application, and (3) ensuring your application meets applicable standards, and any other safety, security, regulatory or other requirements.

These resources are subject to change without notice. TI grants you permission to use these resources only for development of an application that uses the TI products described in the resource. Other reproduction and display of these resources is prohibited. No license is granted to any other TI intellectual property right or to any third party intellectual property right. TI disclaims responsibility for, and you fully indemnify TI and its representatives against any claims, damages, costs, losses, and liabilities arising out of your use of these resources.

TI’s products are provided subject to TI’s Terms of Sale, TI’s General Quality Guidelines, or other applicable terms available either on ti.com or provided in conjunction with such TI products. TI’s provision of these resources does not expand or otherwise alter TI’s applicable warranties or warranty disclaimers for TI products. Unless TI explicitly designates a product as custom or customer-specified, TI products are standard, catalog, general purpose devices.

TI objects to and rejects any additional or different terms you may propose.

Copyright © 2025, Texas Instruments Incorporated

Last updated 10/2025