±1°C TEMPERATURE SENSOR with Automatic Beta Compensation, Series-R, and η-Factor in a SOT23-8

FEATURES

- SOT23-8 PACKAGE
- ±1°C REMOTE DIODE SENSOR (MAX)
- ±1°C LOCAL TEMPERATURE SENSOR (MAX)
- AUTOMATIC BETA COMPENSATION
- SERIES RESISTANCE CANCELLATION
- η-FACTOR CORRECTION
- TWO-WIRE/SMBus™ SERIAL INTERFACE
- MULTIPLE INTERFACE ADDRESSES
- DIODE FAULT DETECTION
- RoHS-COMPLIANT AND NO Sb/Br
- TRANSISTOR AND DIODE MODEL OPERATION

APPLICATIONS

- PROCESSOR/FPGA TEMPERATURE MONITORING
- LCD/DLP®/LCOS PROJECTORS
- SERVERS
- CENTRAL OFFICE TELECOM EQUIPMENT
- STORAGE AREA NETWORKS (SAN)

DESCRIPTION

The TMP441 and TMP442 are remote temperature monitors with a built-in local temperature sensor. Remote temperature sensor diode-connected transistors are typically low-cost, NPN- or PNP-type transistors or diodes that are an integral part of microcontrollers, microprocessors, or field-programmable gate arrays (FPGAs).

Remote accuracy is ±1°C for multiple IC manufacturers, with no calibration needed. The Two-Wire serial interface accepts SMBus write byte, read byte, send byte, and receive byte commands to configure the device.

The TMP441 has a single remote temperature monitor with address pins. The TMP442 has dual remote temperature monitors, and is available with two different interface addresses. All versions include automatic beta compensation (correction), series resistance cancellation, programmable non-ideality factor (η-factor), wide remote temperature measurement range (up to +150°C), and diode fault detection.

The TMP441 and TMP442 are both available in an 8-lead, SOT23 package.

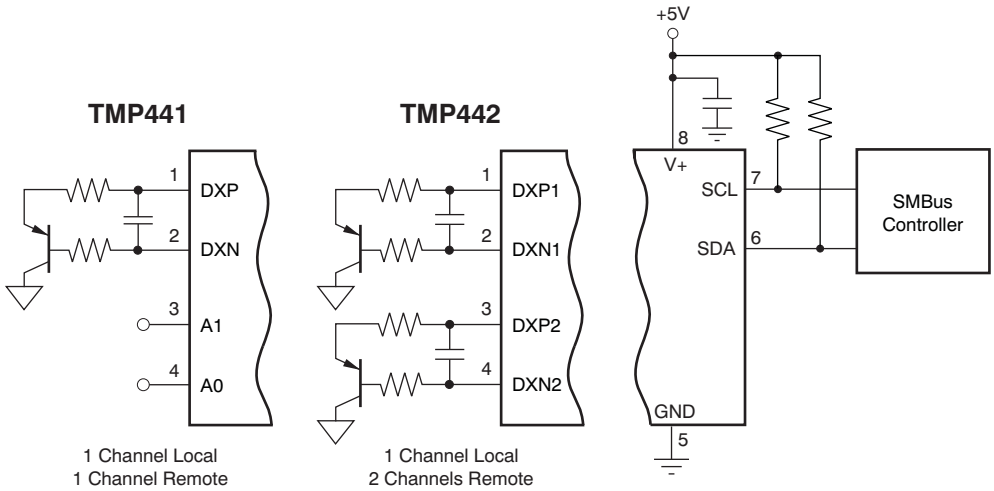

Please be aware that an important notice concerning availability, standard warranty, and use in critical applications of Texas Instruments semiconductor products and disclaimers thereto appears at the end of this data sheet.

DLP is a registered trademark of Texas Instruments.
SMBus is a trademark of Intel Corporation.
All other trademarks are the property of their respective owners.

PRODUCTION DATA information is current as of publication date. Products conform to specifications per the terms of the Texas Instruments standard warranty. Production processing does not necessarily include testing of all parameters.

Copyright © 2008–2009, Texas Instruments Incorporated

This integrated circuit can be damaged by ESD. Texas Instruments recommends that all integrated circuits be handled with appropriate precautions. Failure to observe proper handling and installation procedures can cause damage.

ESD damage can range from subtle performance degradation to complete device failure. Precision integrated circuits may be more susceptible to damage because very small parametric changes could cause the device not to meet its published specifications.

PACKAGE INFORMATION(1)

PRODUCT	DESCRIPTION	TWO-WIRE ADDRESS	PACKAGE-LEAD	PACKAGE DESIGNATOR	PACKAGE MARKING
TMP441	Single-Channel Remote Junction Temperature Sensor	100 11xx	SOT23-8	DCN	DIGI
TMP442A	Dual-Channel Remote Junction Temperature Sensor	100 1100	SOT23-8	DCN	DIHI
TMP442B		100 1101	SOT23-8	DCN	DIJI

(1) For the most current package and ordering information see the Package Option Addendum at the end of this document, or see the TI web site at www.ti.com.

ABSOLUTE MAXIMUM RATINGS(1)

Over operating free-air temperature range, unless otherwise noted.

PARAMETER			TMP441, TMP442	UNIT
Power Supply		V_S	+7	V
Input Voltage	Pins 1, 2, 3, and 4 only		–0.5 to V_S + 0.5	V
	Pins 6 and 7 only		–0.5 to 7	V
Input Current			10	mA
Operating Temperature Range			–55 to +127	°C
Storage Temperature Range			–60 to +130	°C
Junction Temperature		T_J max	+150	°C
ESD Rating	Human Body Model	HBM	3000	V
	Charged Device Model	CDM	1000	V
	Machine Model	MM	200	V

(1) Stresses above these ratings may cause permanent damage. Exposure to absolute maximum conditions for extended periods may degrade device reliability. These are stress ratings only, and functional operation of the device at these or any other conditions beyond those specified is not implied.

Copyright © 2008–2009, Texas Instruments Incorporated

ELECTRICAL CHARACTERISTICS

At T_A = –40°C to +125°C and V_S = 2.7V to 5.5V, unless otherwise noted.

PARAMETER		CONDITIONS	TMP441, TMP442 MIN	TYP	MAX	UNIT
TEMPERATURE ERROR						
Local Temperature Sensor	TE_{LOCAL}	T_A = –40°C to +125°C		±1.25	±2.5	°C
		T_A = 0°C to +100°C, V_S = 3.3V		±0.25	±1	°C
Remote Temperature Sensor(1)	TE_{REMOTE}	T_A = 0°C to +100°C, T_{DIODE} = –40°C to +150°C, V_S = 3.3V		±0.25	±1	°C
		T_A = –40°C to +100°C, T_{DIODE} = –40°C to +150°C, V_S = 3.3V		±0.5	±1.5	°C
		T_A = –40°C to +125°C, T_{DIODE} = –40°C to +150°C		±3	±5	°C
vs Supply (Local/Remote)		V_S = 2.7V to 5.5V		0.2	±0.5	°C/V
TEMPERATURE MEASUREMENT						
Conversion Time (per channel)						
Local Channel			12	15	17	ms
Remote Channel						
Beta Correction Enabled(2)		RC = 1	97	126	137	ms
		RC = 0	36	47	52	ms
Beta Correction Disabled(3)		RC = 1	72	93	100	ms
		RC = 0	33	44	47	ms
Resolution						
Local Temperature Sensor				12		Bits
Remote Temperature Sensor				12		Bits
Remote Sensor Source Currents						
High		Series resistance (beta correction)(4)		120		µA
Medium High				60		µA
Medium Low				12		µA
Low				6		µA
Remote Transistor Ideality Factor	η	TMP441/TMP442 optimized ideality factor		1.000(2)		
				1.008(3)		
Beta Correction Range	β		0.1		27	
SMBus INTERFACE						
Logic Input High Voltage (SCL, SDA)	V_{IH}		2.1			V
Logic Input Low Voltage (SCL, SDA)	V_{IL}				0.8	V
Hysteresis				500		mV
SMBus Output Low Sink Current			6			mA
SDA Output Low Voltage	V_{OL}	I_{OUT} = 6mA		0.15	0.4	V
Logic Input Current		0 ≤ V_{IN} ≤ 6V	–1		+1	µA
SMBus Input Capacitance (SCL, SDA)				3		pF
SMBus Clock Frequency					3.4	MHz
SMBus Timeout			25	32	35	ms
SCL Falling Edge to SDA Valid Time					1	µs
DIGITAL INPUTS						
Input Capacitance				3		pF
Input Logic Levels						
Input High Voltage	V_{IH}		0.7(V+)		(V+)+0.5	V
Input Low Voltage	V_{IL}		–0.5		0.3(V+)	V
Leakage Input Current	I_{IN}	0V ≤ V_{IN} ≤ V_S			1	µA

(1) Tested with less than 5Ω effective series resistance, 100pF differential input capacitance, and an ideal diode with η-factor = 1.008. T_A is the ambient temperature of the TMP441/42. T_{DIODE} is the temperature at the remote diode sensor.
(2) Beta correction configuration set to '1000' and sensor is GND collector-connected (PNP collector to ground).
(3) Beta correction configuration set to '0111' or sensor is diode-connected (base shorted to collector).
(4) If beta correction is disabled ('0111'), then up to 1kΩ of series line resistance is cancelled; if beta correction is enabled ('1xxx'), up to 300Ω is cancelled.

Copyright © 2008–2009, Texas Instruments Incorporated

ELECTRICAL CHARACTERISTICS (continued)

At T_A = –40°C to +125°C and V_S = 2.7V to 5.5V, unless otherwise noted.

PARAMETER		CONDITIONS	TMP441, TMP442			UNIT
			MIN	TYP	MAX	
POWER SUPPLY						
Specified Voltage Range	V_S		2.7		5.5	V
Quiescent Current	I_Q	0.0625 conversions per second		35	45	µA
		Eight conversions per second(5)		0.7	1	mA
		Serial Bus inactive, Shutdown Mode		3	10	µA
		Serial Bus active, f_S = 400kHz, Shutdown Mode		90		µA
		Serial Bus active, f_S = 3.4MHz, Shutdown Mode		350		µA
Undervoltage Lockout	UVLO		2.3	2.4	2.6	V
Power-On Reset Threshold	POR			1.6	2.3	V
TEMPERATURE RANGE						
Specified Range			–40		+125	°C
Storage Range			–60		+130	°C
Thermal Resistance, SOT23-8	θ_{JA}			170		°C/W

(5) Beta correction disabled.

Copyright © 2008–2009, Texas Instruments Incorporated

TMP441 PIN CONFIGURATION

DCN PACKAGE
SOT23-8
(TOP VIEW)

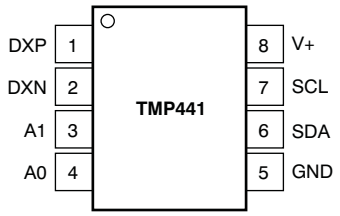

TMP441 PIN ASSIGNMENTS

TMP441		
NO.	**NAME**	**DESCRIPTION**
1	DXP	Positive connection to remote temperature sensor
2	DXN	Negative connection to remote temperature sensor
3	A1	Address pin
4	A0	Address pin
5	GND	Ground
6	SDA	Serial data line for SMBus, open-drain; requires pull-up resistor to V+.
7	SCL	Serial clock line for SMBus, open-drain; requires pull-up resistor to V+.
8	V+	Positive supply voltage (2.7V to 5.5V)

TMP442 PIN CONFIGURATION

DCN PACKAGE
SOT23-8
(TOP VIEW)

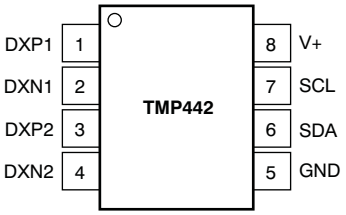

TMP442 PIN ASSIGNMENTS

TMP442		
NO.	**NAME**	**DESCRIPTION**
1	DXP1	Channel 1 positive connection to remote temperature sensor
2	DXN1	Channel 1 negative connection to remote temperature sensor
3	DXP2	Channel 2 positive connection to remote temperature sensor
4	DXN2	Channel 2 negative connection to remote temperature sensor
5	GND	Ground
6	SDA	Serial data line for SMBus, open-drain; requires pull-up resistor to V+.
7	SCL	Serial clock line for SMBus, open-drain; requires pull-up resistor to V+.
8	V+	Positive supply voltage (2.7V to 5.5V)

Copyright © 2008–2009, Texas Instruments Incorporated

TYPICAL CHARACTERISTICS

At T_A = +25°C and V_S = +3.3V, unless otherwise noted.

REMOTE TEMPERATURE ERROR vs TEMPERATURE

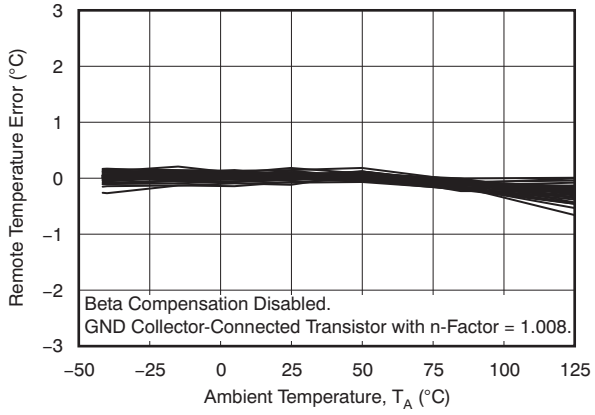

Figure 1.

LOCAL TEMPERATURE ERROR vs TEMPERATURE

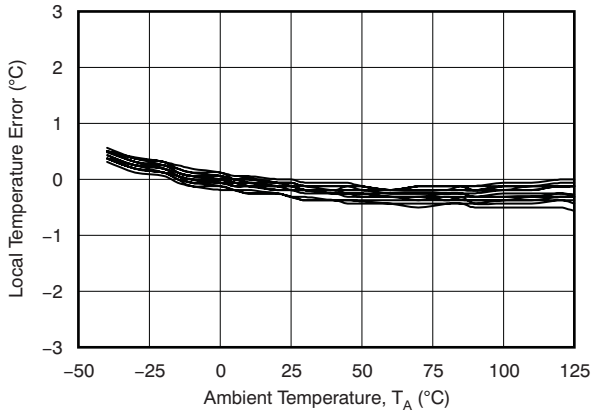

Figure 2.

REMOTE TEMPERATURE ERROR vs LEAKAGE RESISTANCE

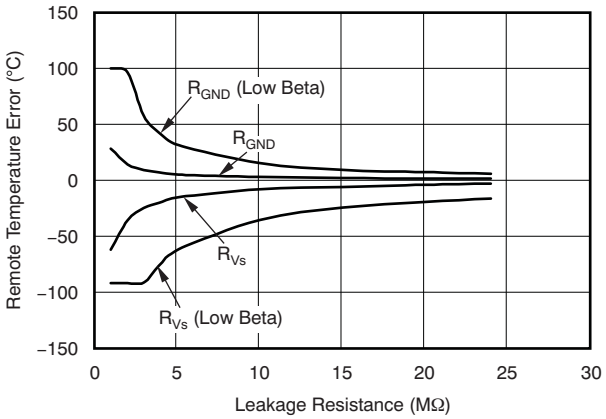

Figure 3.

QUIESCENT CURRENT vs CONVERSION RATE

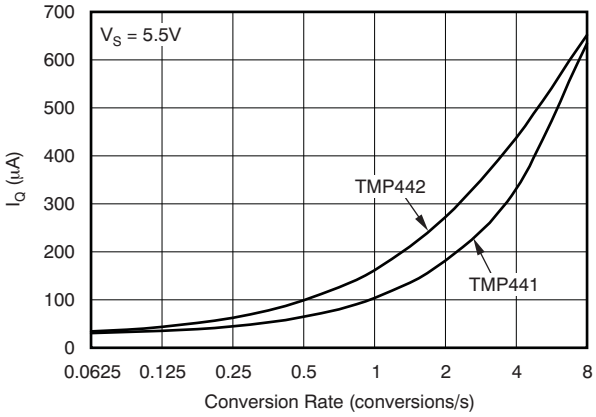

Figure 4.

SHUTDOWN QUIESCENT CURRENT vs SCL CLOCK FREQUENCY

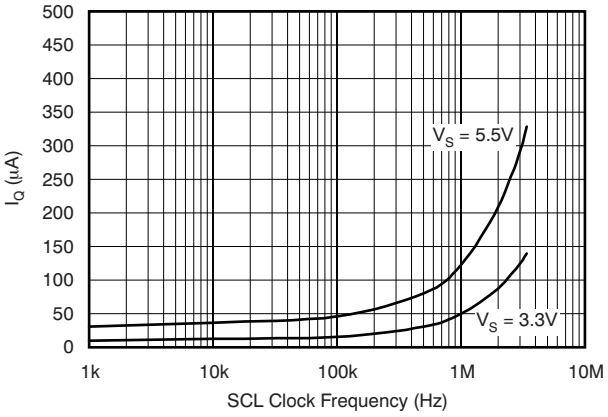

Figure 5.

SHUTDOWN QUIESCENT CURRENT vs SUPPLY VOLTAGE

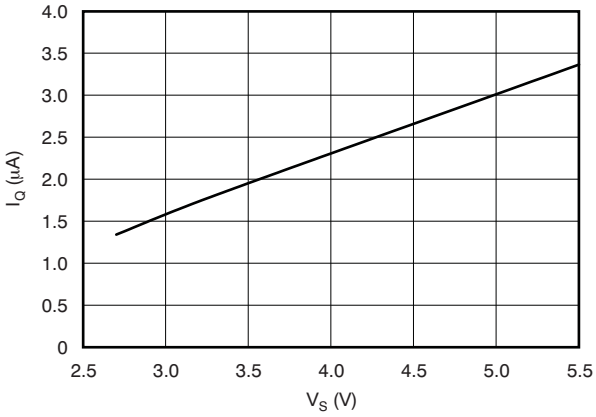

Figure 6.

Copyright © 2008–2009, Texas Instruments Incorporated

TYPICAL CHARACTERISTICS (continued)

At T_A = +25°C and V_S = +3.3V, unless otherwise noted.

REMOTE TEMPERATURE ERROR vs SERIES RESISTANCE

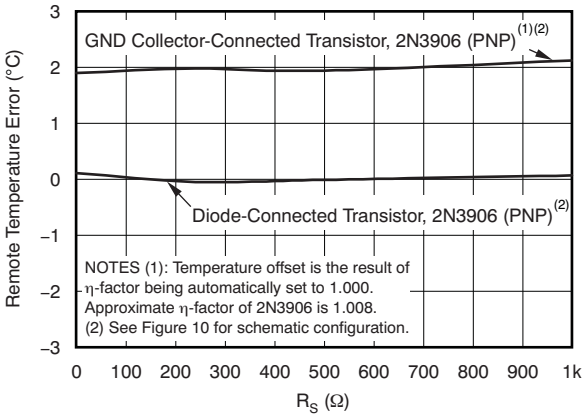

Figure 7.

REMOTE TEMPERATURE ERROR vs SERIES RESISTANCE (Low-Beta Transistor)

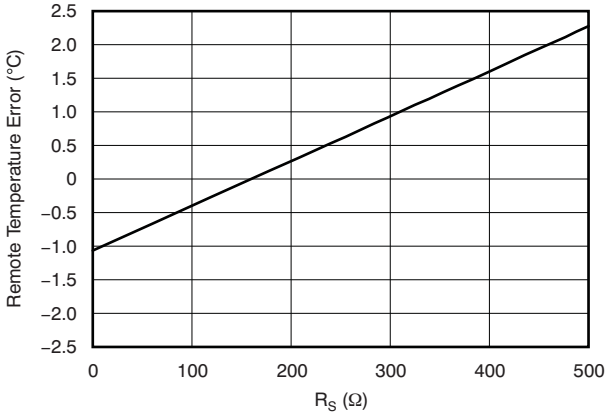

Figure 8.

REMOTE TEMPERATURE ERROR vs DIFFERENTIAL CAPACITANCE

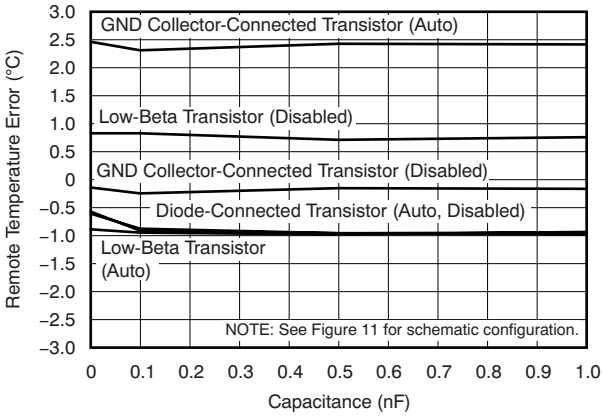

Figure 9.

SERIES RESISTANCE CONFIGURATION

(a) GND Collector-Connected Transistor

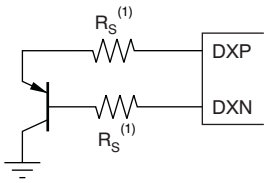

(b) Diode-Connected Transistor

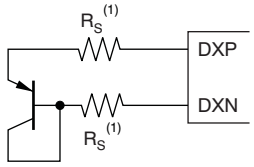

(1) R_S should be less than 1kΩ; see *Filtering* section.

Figure 10.

DIFFERENTIAL CAPACITANCE CONFIGURATION

(a) GND Collector-Connected Transistor

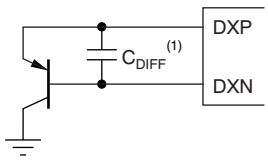

(b) Diode-Connected Transistor

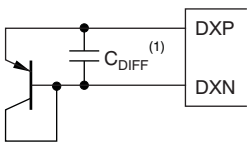

(1) C_{DIFF} should be less than 300pF; see *Filtering* section.

Figure 11.

Copyright © 2008–2009, Texas Instruments Incorporated

APPLICATION INFORMATION

The TMP441/42 are digital temperature sensors that combine a local die temperature measurement channel and one (TMP441) or two (TMP442) remote junction temperature measurement channels in a single SOT23-8 package. The TMP441/42 are Two-Wire- and SMBus interface-compatible and are specified over a temperature range of –40°C to +125°C. The TMP441/42 contain multiple registers for holding configuration information and temperature measurement results.

For proper remote temperature sensing operation, the TMP441 requires only a transistor connected between DXP and DXN; the TMP442 requires transistors connected between DXP1 and DXN1 and between DXP2 and DXN2. The SCL and SDA interface pins require pull-up resistors as part of the communication bus. A 0.1µF power-supply bypass capacitor is recommended for good local bypassing. Figure 12 shows a typical configuration for the TMP441; Figure 13 shows a typical configuration for the TMP442.

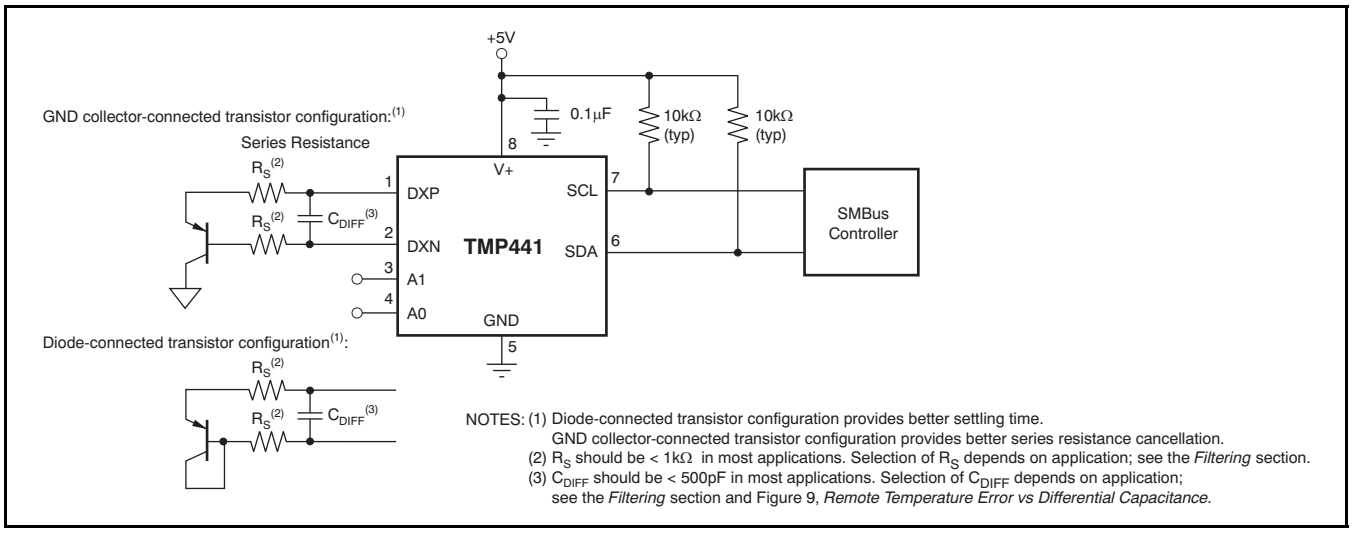

Figure 12. TMP441 Basic Connections

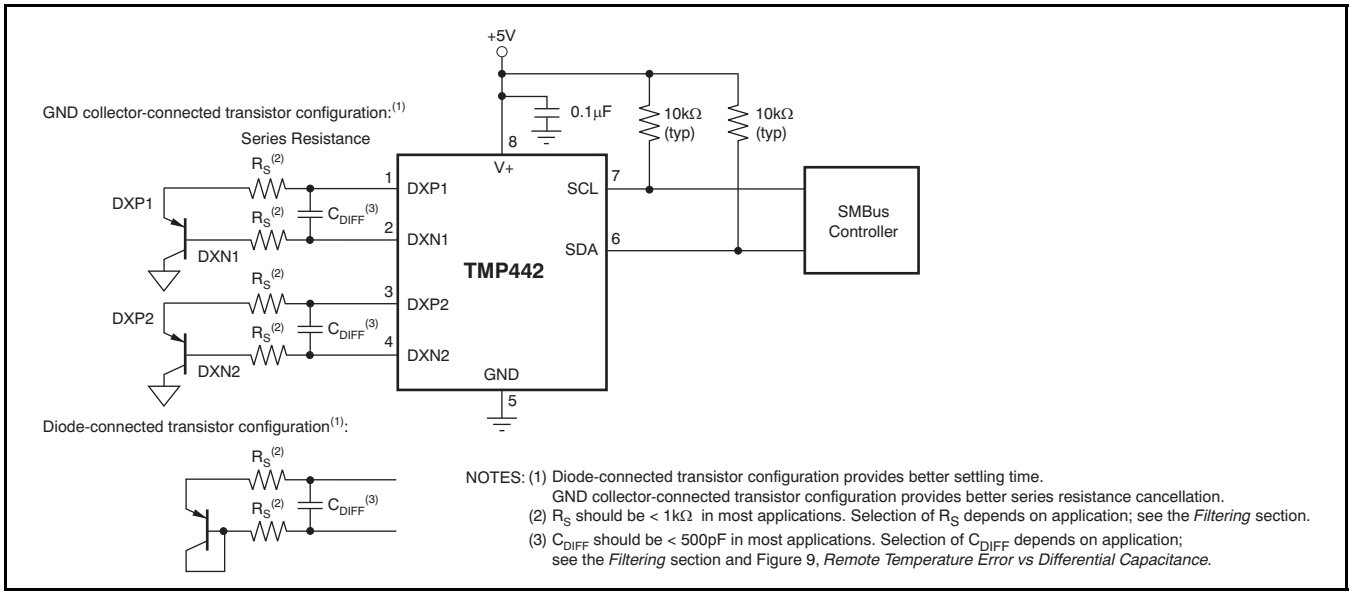

Figure 13. TMP442 Basic Connections

Copyright © 2008–2009, Texas Instruments Incorporated

BETA COMPENSATION

Previous generations of remote junction temperature sensors were operated by controlling the emitter current of the sensing transistor. However, examination of the physics of a transistor shows that V_{BE} is actually a function of the collector current. If beta is independent of the collector current, then V_{BE} may be calculated from the emitter current. In earlier generations of processors that contained PNP transistors connected to these temperature sensors, controlling the emitter current provided acceptable temperature measurement results. At 90nm process geometry and below, the beta factor continues to decrease and the premise that it is independent of collector current becomes less certain.

To manage this increasing temperature measurement error, the TMP441/42 control the collector current instead of the emitter current. The TMP441/42 automatically detect and choose the correct range depending on the beta factor of the external transistor. This auto-ranging is performed at the beginning of each temperature conversion in order to correct for any changes in the beta factor as a result of temperature variation. The device can operate a PNP transistor with a beta factor as low as 0.1. See the *Beta Compensation Configuration Register Section* for further information.

SERIES RESISTANCE CANCELLATION

Series resistance in an application circuit that typically results from printed circuit board (PCB) trace resistance and remote line length (see Figure 12) is automatically cancelled by the TMP441/42, preventing what would otherwise result in a temperature offset. A total of up to 1kΩ of series line resistance is cancelled by the TMP441/42 if beta correction is disabled and up to 300Ω of series line resistance is cancelled if beta correction is enabled, eliminating the need for additional characterization and temperature offset correction. See the two *Remote Temperature Error vs Series Resistance* typical characteristic curves (Figure 7 and Figure 8) for details on the effect of series resistance on sensed remote temperature error.

DIFFERENTIAL INPUT CAPACITANCE

The TMP441/42 can tolerate differential input capacitance of up to 500pF if beta correction is enabled, and 1000pF if beta correction is disabled with minimal change in temperature error. The effect of capacitance on sensed remote temperature error is illustrated in Figure 9, *Remote Temperature Error vs Differential Capacitance*. See the *Filtering* section for suggested component values where filtering unwanted coupled signals is needed.

TEMPERATURE MEASUREMENT DATA

Temperature measurement data are taken over a default range of –55°C to +127°C for both local and remote locations. However, measurements from –55°C to +150°C can be made both locally and remotely by reconfiguring the TMP441/42 for the extended temperature range, as described in this section. Temperature data resulting from conversions within the default measurement range are represented in binary form, as shown in Table 1, *Standard Binary* column. Note that any temperature below –64°C results in a data value of –64 (C0h). Likewise, temperatures above +127°C result in a value of 127 (7Fh). The device can be set to measure over an extended temperature range by changing bit 2 (RANGE) of Configuration Register 1 from low to high. The change in measurement range and data format from standard binary to extended binary occurs at the next temperature conversion. For data captured in the extended temperature range configuration, an offset of 64 (40h) is added to the standard binary value, as shown in the *Extended Binary* column of Table 1. This configuration allows measurement of temperatures as low as –64°C, and as high as +191°C; however, most temperature-sensing diodes only measure with the range of –55°C to +150°C. Additionally, the TMP441/42 are rated only for ambient temperatures ranging from –40°C to +125°C. Parameters in the Absolute Maximum Ratings table must be observed.

Table 1. Temperature Data Format (Local and Remote Temperature High Bytes)

TEMP (°C)	LOCAL/REMOTE TEMPERATURE REGISTER HIGH BYTE VALUE (1°C RESOLUTION)			
	STANDARD BINARY(1)		EXTENDED BINARY(2)	
	BINARY	HEX	BINARY	HEX
–64	1100 0000	C0	0000 0000	00
–50	1100 1110	CE	0000 1110	0E
–25	1110 0111	E7	0010 0111	27
0	0000 0000	00	0100 0000	40
1	0000 0001	01	0100 0001	41
5	0000 0101	05	0100 0101	45
10	0000 1010	0A	0100 1010	4A
25	0001 1001	19	0101 1001	59
50	0011 0010	32	0111 0010	72
75	0100 1011	4B	1000 1011	8B
100	0110 0100	64	1010 0100	A4
125	0111 1101	7D	1011 1101	BD
127	0111 1111	7F	1011 1111	BF
150	0111 1111	7F	1101 0110	D6
175	0111 1111	7F	1110 1111	EF
191	0111 1111	7F	1111 1111	FF

(1) Resolution is 1°C/count. Negative numbers are represented in twos complement format.

(2) Resolution is 1°C/count. All values are unsigned with a –64°C offset.

Copyright © 2008–2009, Texas Instruments Incorporated

Both local and remote temperature data use two bytes for data storage. The high byte stores the temperature with 1°C resolution. The second or low byte stores the decimal fraction value of the temperature and allows a higher measurement resolution, as shown in Table 2. The measurement resolution for both the local and remote channels is 0.0625°C, and cannot be adjusted.

Table 2. Decimal Fraction Temperature Data Format (Local and Remote Temperature Low Bytes)

TEMP (°C)	TEMPERATURE REGISTER LOW BYTE VALUE (0.0625°C RESOLUTION)(1)	
	STANDARD AND EXTENDED BINARY	HEX
0	0000 0000	00
0.0625	0001 0000	10
0.1250	0010 0000	20
0.1875	0011 0000	30
0.2500	0100 0000	40
0.3125	0101 0000	50
0.3750	0110 0000	60
0.4375	0111 0000	70
0.5000	1000 0000	80
0.5625	1001 0000	90
0.6250	1010 0000	A0
0.6875	1011 0000	B0
0.7500	1100 0000	C0
0.8125	1101 0000	D0
0.8750	1110 0000	E0
0.9375	1111 0000	F0

(1) Resolution is 0.0625°C/count. All possible values are shown.

Standard Binary to Decimal Temperature Data Calculation Example

High byte conversion (for example, 0111 0011):

Convert the right-justified binary high byte to hexadecimal.

From hexadecimal, multiply the first number by $16^0 = 1$ and the second number by $16^1 = 16$.

The sum equals the decimal equivalent.

0111 0011b → 73h → $(3 \times 16^0) + (7 \times 16^1) = 115$

Low byte conversion (for example, 0111 0000):

To convert the left-justified binary low-byte to decimal, use bits 7 through 4 and ignore bits 3 through 0 because they do not affect the value of the number.

0111b → $(0 \times 1/2)^1 + (1 \times 1/2)^2 + (1 \times 1/2)^3 + (1 \times 1/2)^4 = 0.4375$

Note that the final numerical result is the sum of the high byte and low byte. In negative temperatures, the unsigned low byte adds to the negative high byte to result in a value more than the high byte (for instance, –15 + 0.75 = –14.25, not –15.75).

Standard Decimal to Binary Temperature Data Calculation Example

For positive temperatures (for example, +20°C):

(+20°C)/(1°C/count) = 20 → 14h → 0001 0100

Convert the number to binary code with 8-bit, right-justified format, and MSB = '0' to denote a positive sign.

+20°C is stored as 0001 0100 → 14h.

For negative temperatures (for example, –20°C):

(|–20°C|)/(1°C/count) = 20 → 14h → 0001 0100

Generate the twos complement of a negative number by complementing the absolute value binary number and adding 1.

–20°C is stored as 1110 1100 → ECh.

Copyright © 2008–2009, Texas Instruments Incorporated

REGISTER INFORMATION

The TMP441/42 contain multiple registers for holding configuration information, temperature measurement results, and status information. These registers are described in Figure 14 and Table 3.

POINTER REGISTER

Figure 14 shows the internal register structure of the TMP441/42. The 8-bit Pointer Register is used to address a given data register. The Pointer Register identifies which of the data registers should respond to a read or write command on the Two-Wire bus. This register is set with every write command. A write command must be issued to set the proper value in the Pointer Register before executing a read command. Table 3 describes the pointer address of the TMP441/42 registers. The power-on reset (POR) value of the Pointer Register is 00h (0000 0000b).

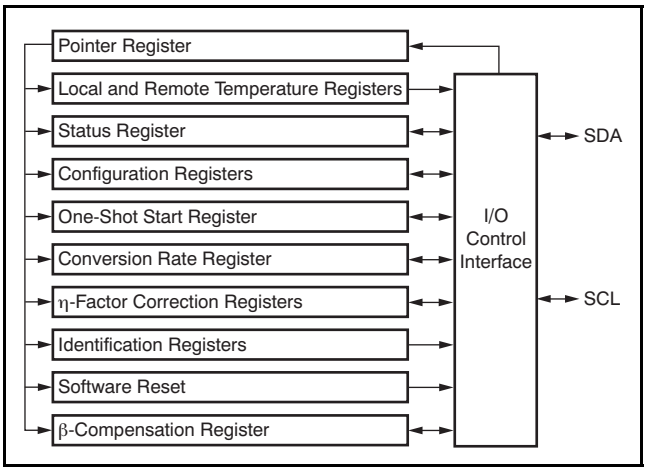

Figure 14. Internal Register Structure

Table 3. Register Map

POINTER (HEX)	POR (HEX)	BIT DESCRIPTION								REGISTER DESCRIPTION
		7	6	5	4	3	2	1	0	
00	00	LT11	LT10	LT9	LT8	LT7	LT6	LT5	LT4	Local Temperature (High Byte)(1)
01	00	RT11	RT10	RT9	RT8	RT7	RT6	RT5	RT4	Remote Temperature 1 (High Byte)(1)
02	00	RT11	RT10	RT9	RT8	RT7	RT6	RT5	RT4	Remote Temperature 2 (High Byte)(1)(2)
08		BUSY	0	0	0	0	0	0	0	Status Register
09	00	0	SD	0	0	0	RANGE	0	0	Configuration Register 1
0A	1C/3C(2)	0	0	REN2(2)	REN	LEN	RC	0	0	Configuration Register 2
0B	07	0	0	0	0	0	R2	R1	R0	Conversion Rate Register
0C	08/88(2)	BC23(2)	BC22(2)	BC21(2)	BC20(2)	BC13	BC12	BC11	BC10	Beta Compensation
0F		X	X	X	X	X	X	X	X	One-Shot Start(3)
10	00	LT3	LT2	LT1	LT0	0	0	nPVLD	0	Local Temperature (Low Byte)
11	00	RT3	RT2	RT1	RT0	0	0	nPVLD	OPEN	Remote Temperature 1 (Low Byte)
12	00	RT3	RT2	RT1	RT0	0	0	nPVLD	OPEN	Remote Temperature 2 (Low Byte)(2)
21	00	NC7	NC6	NC5	NC4	NC3	NC2	NC1	NC0	η Correction 1
22	00	NC7	NC6	NC5	NC4	NC3	NC2	NC1	NC0	η Correction 2(2)
FC		X	X	X	X	X	X	X	X	Software Reset(4)
FE	55	0	1	0	1	0	1	0	1	Manufacturer ID
FF	41	0	1	0	0	0	0	0	1	TMP441 Device ID
	42	0	1	0	0	0	0	1	0	TMP442 Device ID

(1) Compatible with Two-Byte Read; see Figure 18.
(2) TMP442 only.
(3) X = undefined. Writing any value to this register initiates a one-shot start; see the *One-Shot Conversion* section.
(4) X = undefined. Writing any value to this register initiates a software reset; see the *Software Reset* section.

Copyright © 2008–2009, Texas Instruments Incorporated

TEMPERATURE REGISTERS

The TMP441/42 have four 8-bit registers that hold temperature measurement results. Both the local channel and the remote channel have a high byte register that contains the most significant bits (MSBs) of the temperature analog-to-digital converter (ADC) result and a low byte register that contains the least significant bits (LSBs) of the temperature ADC result. The local channel high byte address is 00h; the local channel low byte address is 10h. The remote channel high byte is at address 01h; the remote channel low byte address is 11h. For the TMP442, the second remote channel high byte address is 02h; the second remote channel low byte is 12h. These registers are read-only and are updated by the ADC each time a temperature measurement is completed.

The TMP441/42 contain circuitry to assure that a low byte register read command returns data from the same ADC conversion as the immediately preceding high byte read command. This condition remains valid only until another register is read. For proper operation, the high byte of a temperature register should be read first. The low byte register should be read in the next read command. The low byte register may be left unread if the LSBs are not needed. Alternatively, the temperature registers may be read as a 16-bit register by using a single two-byte read command from address 00h for the local channel result, or from address 01h for the remote channel result (02h for the second remote channel result). The high byte is output first, followed by the low byte. Both bytes of this read operation are from the same ADC conversion. The power-on reset value of all temperature registers is 00h.

STATUS REGISTER

The Status Register reports the state of the temperature ADCs. Table 4 shows the Status Register bits. The Status Register is read-only, and is read by accessing pointer address 08h. The BUSY bit = '1' if the ADC is making a conversion; it is set to '0' if the ADC is not converting.

CONFIGURATION REGISTER 1

Configuration Register 1 (pointer address 09h) sets the temperature range and controls shutdown mode. The Configuration Register is set by writing to pointer address 09h and read by reading from pointer address 09h. The shutdown (SD) bit (bit 6) enables or disables the temperature measurement circuitry. If SD = '0', the TMP441/42 convert continuously at the rate set in the conversion rate register. When SD is set to '1', the TMP441/42 stop converting when the current conversion sequence is complete and enters a shutdown mode. When SD is set to '0' again, the TMP441/42 resume continuous conversions. When SD = '1', a single conversion can be started by writing to the One-Shot Register.

The temperature range is set by configuring bit 2 of the Configuration Register. Setting this bit low configures the TMP441/42 for the standard measurement range (–55°C to +127°C); temperature conversions are stored in the standard binary format. Setting bit 2 high configures the TMP441/42 for the extended measurement range (–55°C to +150°C); temperature conversions are stored in the extended binary format (see Table 1). The remaining bits of the Configuration Register are reserved and must always be set to '0'. The power-on reset value for this register is 00h. Table 5 summarizes the bits of Configuration Register 1.

Table 4. Status Register Format

STATUS REGISTER (Read = 08h, Write = NA)								
BIT #	**D7**	**D6**	**D5**	**D4**	**D3**	**D2**	**D1**	**D0**
BIT NAME	BUSY	0	0	0	0	0	0	0
POR VALUE	0(1)	0	0	0	0	0	0	0

(1) The BUSY changes to '1' almost immediately (< 100μs) following power-up, as the TMP441/42 begins the first temperature conversion. It is high whenever the TMP441/42 converts a temperature reading.

Table 5. Configuration Register 1 Bit Descriptions

CONFIGURATION REGISTER 1 (Read/Write = 09h, POR = 00h)			
BIT	**NAME**	**FUNCTION**	**POWER-ON RESET VALUE**
7	Reserved	—	0
6	SD	0 = Run 1 = Shut down	0
5, 4, 3	Reserved	—	0
2	Temperature Range	0 = –55°C to +127°C 1 = –55°C to +150°C	0
1, 0	Reserved	—	0

Copyright © 2008–2009, Texas Instruments Incorporated

ONE-SHOT CONVERSION

When the TMP441/42 are in shutdown mode (SD = 1 in the Configuration Register 1), a single conversion can start on all enabled channels by writing any value to the One-Shot Start Register, pointer address 0Fh. This write operation starts one conversion; the TMP441/42 return to shutdown mode when that conversion completes. The value of the data sent in the write command is irrelevant and is not stored by the TMP441/42. When the TMP441/42 are in shutdown mode, the conversion sequence currently in process must be completed before a one-shot command can be issued. One-shot commands issued during a conversion are ignored.

CONFIGURATION REGISTER 2

Configuration Register 2 (pointer address 0Ah) controls which temperature measurement channels are enabled and whether the external channels have the resistance correction feature enabled or not.

The RC bit enables the resistance correction feature for the external temperature channels. If RC = '1', series resistance correction is enabled; if RC = '0', resistance correction is disabled. Resistance correction should be enabled for most applications. However, disabling the resistance correction may yield slightly improved temperature measurement noise performance, and reduce conversion time by about 50%, which could lower power consumption when conversion rates of two per second or less are selected.

The LEN bit enables the local temperature measurement channel. If LEN = '1', the local channel is enabled; if LEN = '0', the local channel is disabled.

The REN bit enables external temperature measurement channel 1 (connected to pins 1 and 2.) If REN = '1', the external channel is enabled; if REN = '0', the external channel is disabled.

For the TMP442 only, the REN2 bit enables the second external measurement channel (connected to pins 3 and 4.) If REN2 = '1', the second external channel is enabled; if REN2 = '0', the second external channel is disabled.

The temperature measurement sequence is local channel, external channel 1, external channel 2, shutdown, and delay (to set conversion rate, if necessary). The sequence starts over with the local channel. If any of the channels are disabled, they are skipped in the sequence. Table 6 summarizes the bits of Configuration Register 2.

CONVERSION RATE REGISTER

The Conversion Rate Register (pointer address 0Bh) controls the rate at which temperature conversions are performed. This register adjusts the idle time between conversions but not the conversion timing itself, thereby allowing the TMP441/42 power dissipation to be balanced with the temperature register update rate. Table 7 shows the conversion rate options and corresponding current consumption. A one-shot command can be used during the idle time between conversions to immediately start temperature conversions on all enabled channels.

Table 6. Configuration Register 2 Bit Descriptions

CONFIGURATION REGISTER 2 (Read/Write = 0Ah, POR = 1Ch for TMP441; 3Ch for TMP442)			
BIT	**NAME**	**FUNCTION**	**POWER-ON RESET VALUE**
7, 6	Reserved	—	0
5	REN2	0 = External channel 2 disabled 1 = External channel 2 enabled	1 (TMP442) 0 (TMP441)
4	REN	0 = External channel 1 disabled 1 = External channel 1 enabled	1
3	LEN	0 = Local channel disabled 1 = Local channel enabled	1
2	RC	0 = Resistance correction disabled 1 = Resistance correction enabled	1
1, 0	Reserved	—	0

Copyright © 2008–2009, Texas Instruments Incorporated

BETA COMPENSATION CONFIGURATION REGISTER

If the Beta Compensation Configuration Register is set to '1xxx' (beta compensation enabled) for a given channel at the beginning of each temperature conversion, the TMP441/42 automatically detects if the sensor is diode-connected or GND collector-connected, selects the proper beta range, and measures the sensor temperature appropriately.

If the Beta Compensation Configuration Register is set to '0111' (beta compensation disabled) for a given channel, the automatic detection is bypassed and the temperature is measured assuming a diode-connected sensor. A PNP transistor may continue to be GND collector-connected in this mode, but no beta compensation is applied. When the beta compensation configuration is set to '0111' or the sensor is diode-connected (base shorted to collector), the η-factor used by the TMP441/42 is 1.008. When the beta compensation configuration is set to '1xxx' (beta compensation enabled) and the sensor is GND collector-connected (PNP collector to ground), the η-factor used by the TMP441/42 is 1.000. Table 8 shows the read values for the selected beta ranges and the appropriate η-Factor used for each conversion.

Table 7. Conversion Rate Register

CONVERSION RATE REGISTER (Read/Write = 0Bh, POR = 07h)										
									AVERAGE I_Q (TYP) (μA), V_S = 5.5V	
R7	R6	R5	R4	R3	R2	R1	R0	CONVERSIONS/SEC	TMP441	TMP442
0	0	0	0	0	0	0	0	0.0625	30	35
0	0	0	0	0	0	0	1	0.125	35	44
0	0	0	0	0	0	1	0	0.25	45	62
0	0	0	0	0	0	1	1	0.5	65	99
0	0	0	0	0	1	0	0	1	103	162
0	0	0	0	0	1	0	1	2	181	272
0	0	0	0	0	1	1	0	4	332	437
0	0	0	0	0	1	1	1	8(1)	634	652

(1) Conversion rate depends on which channels are enabled.

Table 8. Beta Compensation Configuration Register

BCx3-BCx0	BETA RANGE DESCRIPTION	N	TIME
1000	Automatically selected range 0 (0.10 < beta < 0.18)	1.000	126ms
1001	Automatically selected range 1 (0.16 < beta < 0.26)	1.000	126ms
1010	Automatically selected range 2 (0.24 < beta < 0.43)	1.000	126ms
1011	Automatically selected range 3 (0.35 < beta < 0.78)	1.000	126ms
1100	Automatically selected range 4 (0.64 < beta < 1.8)	1.000	126ms
1101	Automatically selected range 5 (1.4 < beta < 9.0)	1.000	126ms
1110	Automatically selected range 6 (6.7 < beta < 40.0)	1.000	126ms
1111	Automatically selected range 7 (beta > 27.0)	1.000	126ms
1111	Automatically detected diode connected sensor	1.008	93ms
0000	Manually selected range 0 (0.10 < beta < 0.5)	1.000	93ms
0001	Manually selected range 1 (0.13 < beta < 1.0)	1.000	93ms
0010	Manually selected range 2 (0.18 < beta < 2.0)	1.000	93ms
0011	Manually selected range 3 (0.3 < beta < 25)	1.000	93ms
0100	Manually selected range 4 (0.5 < beta < 50)	1.000	93ms
0101	Manually selected range 5 (1.1 < beta < 100)	1.000	93ms
0110	Manually selected range 6 (2.4 < beta < 150)	1.000	93ms
0111	Manually disabled beta correction	1.008	93ms

Copyright © 2008–2009, Texas Instruments Incorporated

η-FACTOR CORRECTION REGISTER

The TMP441/42 allow for a different η-factor value to be used for converting remote channel measurements to temperature. The remote channel uses sequential current excitation to extract a differential V_{BE} voltage measurement to determine the temperature of the remote transistor. Equation 1 relates this voltage and temperature.

$$V_{BE2} - V_{BE1} = \frac{\eta kT}{q} \ln\left(\frac{I_2}{I_1}\right) \quad (1)$$

The value η in Equation 1 is a characteristic of the particular transistor used for the remote channel. When the beta compensation configuration is set to '0111' (beta compensation disabled) or the sensor is diode-connected (base shorted to collector), the η-factor used by the TMP441/42 is 1.008. When the beta compensation configuration is set to '1000' (beta compensation enabled) and the sensor is GND collector-connected (PNP collector to ground), the η-factor used by the TMP441/42 is 1.000. If the η-factor used for the temperature conversion does not match the characteristic of the sensor, then temperature offset is observed. The value in the η-Factor Correction Register may be used to adjust the effective η-factor according to Equation 2 and Equation 3 for disabled beta compensation or a diode-connected sensor. Equation 4 and Equation 5 may be used for enabled beta compensation and a GND collector-connected sensor.

$$\eta_{eff} = \frac{1.008 \times 300}{300 - N_{ADJUST}} \quad (2)$$

$$N_{ADJUST} = 300 - \frac{300 \times 1.008}{\eta_{eff}} \quad (3)$$

$$\eta_{eff} = \frac{1.000 \times 300}{300 - N_{ADJUST}} \quad (4)$$

$$N_{ADJUST} = 300 - \frac{300 \times 1.000}{\eta_{eff}} \quad (5)$$

The η-correction value must be stored in twos complement format, yielding an effective data range from –128 to +127. Table 9 shows the η-factor range for both 1.008 and 1.000. The η-correction value may be written to and read from pointer address 21h. (The η-correction value for the second remote channel is read to/written from pointer address 22h.) The register power-on reset value is 00h, thus having no effect unless the register is written to.

Table 9. η-Factor Range

N_{ADJUST}			η-FACTOR = 1.008	η-FACTOR = 1.000
BINARY	HEX	DECIMAL		
0111 1111	7F	127	1.747977	1.734104
0000 1010	0A	10	1.042759	1.034482
0000 1000	08	8	1.035616	1.027397
0000 0110	06	6	1.028571	1.020408
0000 0100	04	4	1.021622	1.013513
0000 0010	02	2	1.014765	1.006711
0000 0001	01	1	1.011371	1.003344
0000 0000	00	0	1.008	1.000
1111 1111	FF	–1	1.004651	0.996677
1111 1110	FE	–2	1.001325	0.993377
1111 1100	FC	–4	0.994737	0.986842
1111 1010	FA	–6	0.988235	0.980392
1111 1000	F8	–8	0.981818	0.974025
1111 0110	F6	–10	0.975484	0.967741
1000 0000	80	–128	0.706542	0.700934

SOFTWARE RESET

The TMP441/42 may be reset by writing any value to the Software Reset Register (pointer address FCh). This action restores the power-on reset state to all of the TMP441/42 registers as well as aborts any conversion in process. The TMP441/42 also support reset via the Two-Wire general call address (0000 0000). The TMP441/42 acknowledge the general call address and respond to the second byte. If the second byte is 0000 0110, the TMP441/42 execute a software reset. The TMP441/42 do not respond to other values in the second byte.

IDENTIFICATION REGISTERS

The TMP441/42 allow for the Two-Wire bus controller to query the device for manufacturer and device IDs to enable software identification of the device at the particular Two-Wire bus address. The manufacturer ID is obtained by reading from pointer address FEh. The device ID is obtained by reading from pointer address FFh. The TMP441/42 both return 55h for the manufacturer code. The TMP441 returns 41h for the device ID and the TMP442 returns 42h for the device ID. These registers are read-only.

Copyright © 2008–2009, Texas Instruments Incorporated

BUS OVERVIEW

The TMP441/42 are SMBus interface-compatible. In SMBus protocol, the device that initiates the transfer is called a *master*, and the devices controlled by the master are *slaves*. The bus must be controlled by a master device that generates the serial clock (SCL), controls the bus access, and generates the START and STOP conditions.

To address a specific device, a START condition is initiated. START is indicated by pulling the data line (SDA) from a high-to-low logic level while SCL is high. All slaves on the bus shift in the slave address byte, with the last bit indicating whether a read or write operation is intended. During the ninth clock pulse, the slave being addressed responds to the master by generating an Acknowledge and pulling SDA low.

Data transfer is then initiated and sent over eight clock pulses followed by an Acknowledge bit. During data transfer SDA must remain stable while SCL is high, because any change in SDA while SCL is high is interpreted as a control signal.

Once all data have been transferred, the master generates a STOP condition. STOP is indicated by pulling SDA from low to high, while SCL is high.

SERIAL INTERFACE

The TMP441/42 operate only as a slave device on either the Two-Wire bus or the SMBus. Connections to either bus are made via the open-drain I/O lines, SDA and SCL. The SDA and SCL pins feature integrated spike suppression filters and Schmitt triggers to minimize the effects of input spikes and bus noise. The TMP441/42 support the transmission protocol for fast (1kHz to 400kHz) and high-speed (1kHz to 3.4MHz) modes. All data bytes are transmitted MSB first.

SERIAL BUS ADDRESS

To communicate with the TMP441/42, the master must first address slave devices via a slave address byte. The slave address byte consists of seven address bits, and a direction bit indicating the intent of executing a read or write operation.

TWO-WIRE INTERFACE SLAVE DEVICE ADDRESSES

The TMP441 supports nine slave device addresses. The TMP442A and TMP442B are available in two different fixed serial interface addresses.

The slave device address for the TMP441 is set by the A1 and A0 pins, as summarized in Table 10.

Table 10. TMP441 Slave Address Options

TWO-WIRE SLAVE ADDRESS	A1	A0
0011 100	Float	0
0011 101	Float	1
0011 110	0	Float
0011 111	1	Float
0101 010	Float	Float
1001 100	0	0
1001 101	0	1
1001 110	1	0
1001 111	1	1

The TMP442 has a factory-preset slave address. The TMP442A slave address is 1001100b, and the TMP442B slave address is 1001101b. The configuration of the DXP and DXN channels are independent of the address. Unused DXP channels can be left open or tied to GND.

READ/WRITE OPERATIONS

Accessing a particular register on the TMP441/42 is accomplished by writing the appropriate value to the Pointer Register. The value for the Pointer Register is the first byte transferred after the slave address byte with the R/$\overline{W}$ bit low. Every write operation to the TMP441/42 requires a value for the Pointer Register (see Figure 16).

When reading from the TMP441/42, the last value stored in the Pointer Register by a write operation is used to determine which register is read by a read operation. To change the register pointer for a read operation, a new value must be written to the Pointer Register. This transaction is accomplished by issuing a slave address byte with the R/$\overline{W}$ bit low, followed by the Pointer Register byte; no additional data are required. The master can then generate a START condition and send the slave address byte with the R/$\overline{W}$ bit high to initiate the read command. See Figure 18 for details of this sequence. If repeated reads from the same register are desired, it is not necessary to continually send the Pointer Register bytes, because the TMP441/42 retain the Pointer Register value until it is changed by the next write operation. Note that register bytes are sent MSB first, followed by the LSB.

Read operations should be terminated by issuing a Not-Acknowledge command at the end of the last byte to be read. For a single-byte operation, the master should leave the SDA line high during the Acknowledge time of the first byte that is read from the slave. For a two-byte read operation, the master must pull SDA low during the Acknowledge time of the first byte read, and should leave SDA high during the Acknowledge time of the second byte read from the slave.

Copyright © 2008–2009, Texas Instruments Incorporated

TIMING DIAGRAMS

The TMP441/42 are Two-Wire and SMBus-compatible. Figure 15 to Figure 18 describe the various operations on the TMP441/42. Parameters for Figure 15 are defined in Table 11. Bus definitions are:

Bus Idle: Both SDA and SCL lines remain high.

Start Data Transfer: A change in the state of the SDA line, from high to low, while the SCL line is high, defines a START condition. Each data transfer is initiated with a START condition.

Stop Data Transfer: A change in the state of the SDA line from low to high while the SCL line is high defines a STOP condition. Each data transfer terminates with a repeated START or STOP condition.

Data Transfer: The number of data bytes transferred between a START and a STOP condition is not limited and is determined by the master device. The receiver acknowledges data transfer.

Acknowledge: Each receiving device, when addressed, is obliged to generate an Acknowledge bit. A device that acknowledges must pull down the SDA line during the Acknowledge clock pulse in such a way that the SDA line is stable low during the high period of the Acknowledge clock pulse. Setup and hold times must be taken into account. On a master receive, data transfer termination can be signaled by the master generating a Not-Acknowledge on the last byte that has been transmitted by the slave.

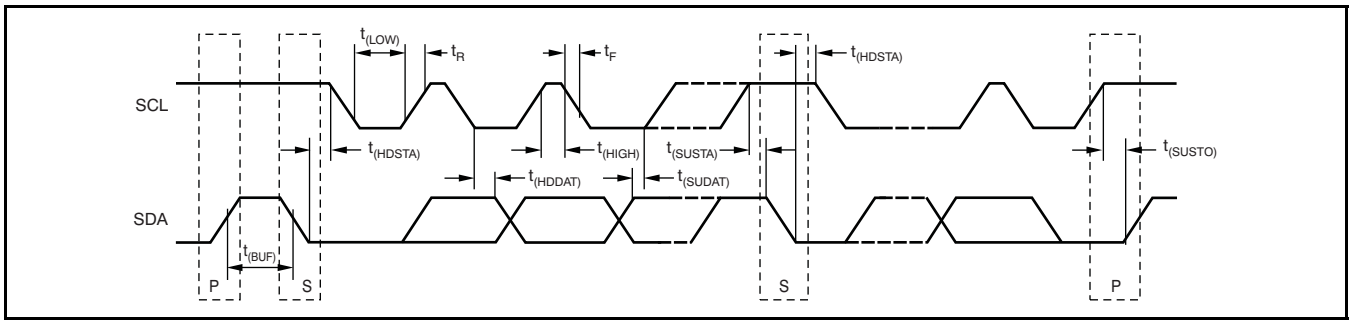

Figure 15. Two-Wire Timing Diagram

Table 11. Timing Characteristics for Figure 15

PARAMETER		FAST MODE		HIGH-SPEED MODE		UNIT
		MIN	MAX	MIN	MAX	
SCL operating frequency	$f_{(SCL)}$	0.001	0.4	0.001	3.4	MHz
Bus free time between STOP and START conditions	$t_{(BUF)}$	600		160		ns
Hold time after repeated START condition. After this period, the first clock is generated.	$t_{(HDSTA)}$	100		100		ns
Repeated START condition setup time	$t_{(SUSTA)}$	100		100		ns
STOP condition setup time	$t_{(SUSTO)}$	100		100		ns
Data hold time	$t_{(HDDAT)}$	0		0		ns
Data setup time	$t_{(SUDAT)}$	100		10		ns
SCL clock LOW period	$t_{(LOW)}$	1300		160		ns
SCL clock HIGH period	$t_{(HIGH)}$	600		60		ns
Clock/Data fall time	t_F		300		160	ns
Clock/Data rise time	t_R		300		160	ns
for SCL ≤ 100kHz	t_R		1000			ns

Copyright © 2008–2009, Texas Instruments Incorporated

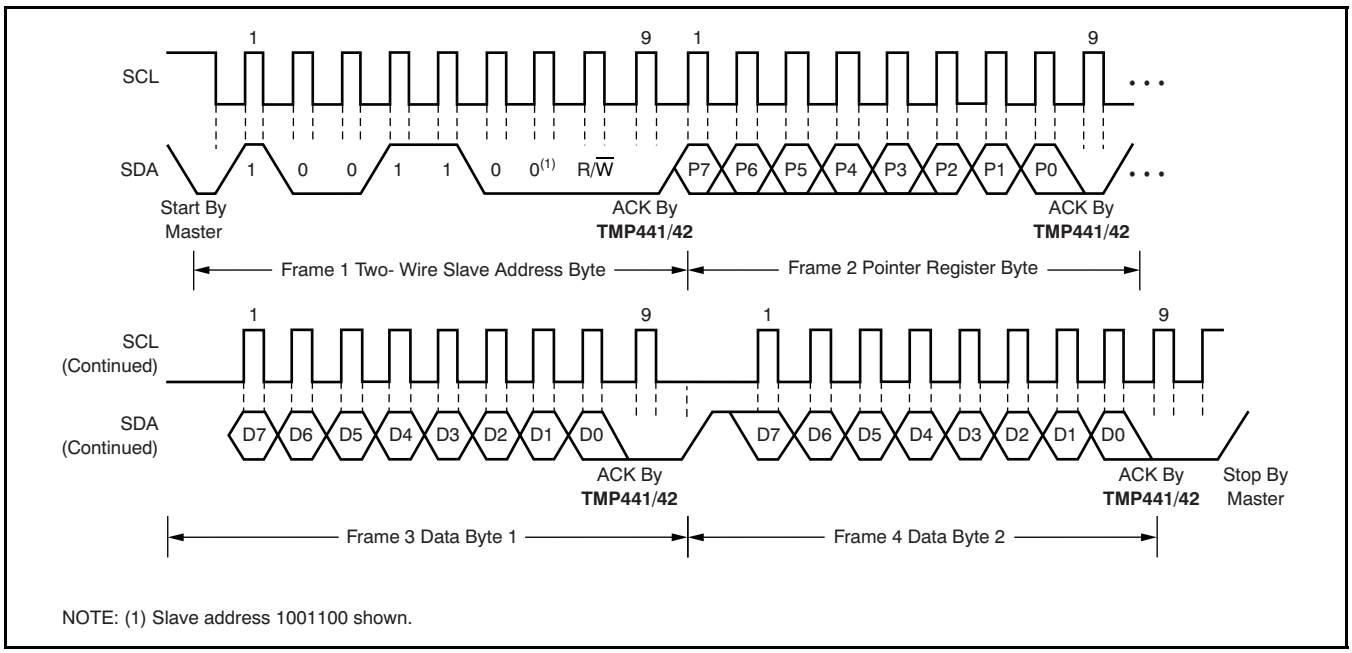

Figure 16. Two-Wire Timing Diagram for Write Word Format

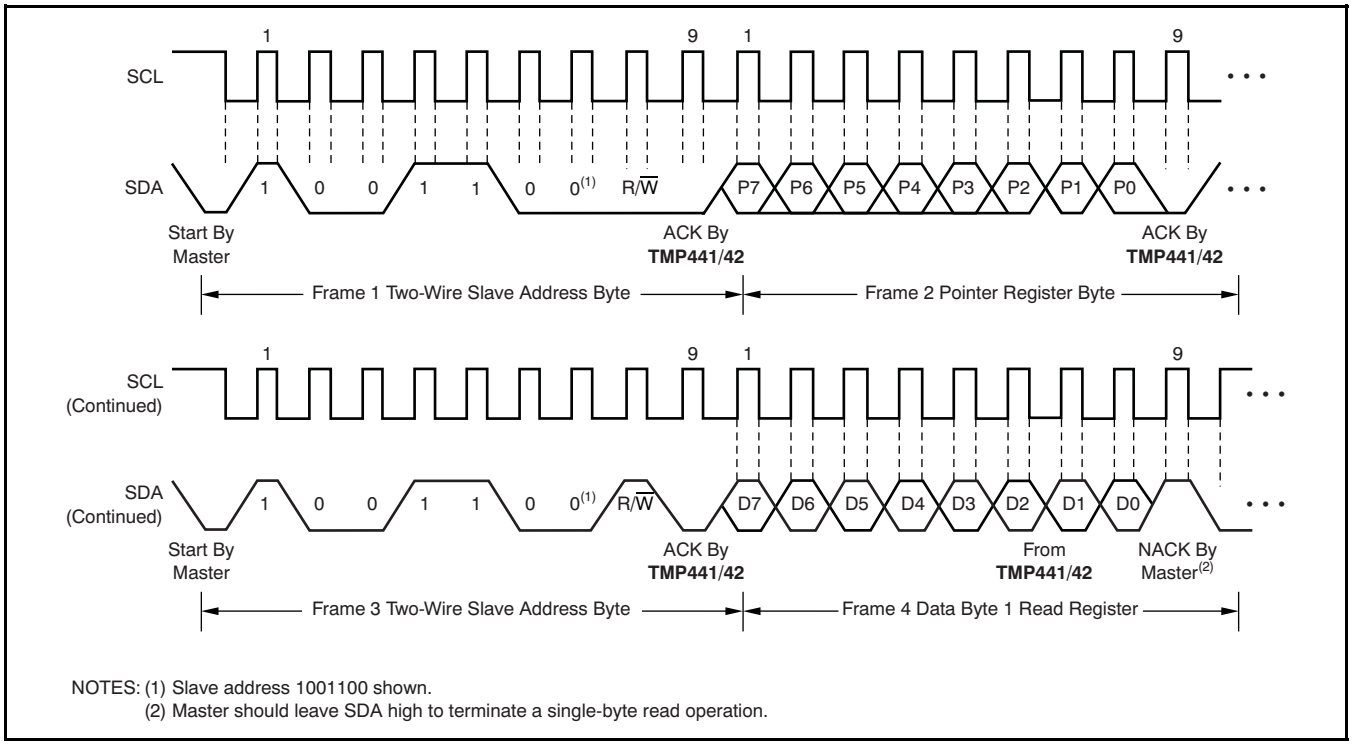

Figure 17. Two-Wire Timing Diagram for Single-Byte Read Format

Copyright © 2008–2009, Texas Instruments Incorporated

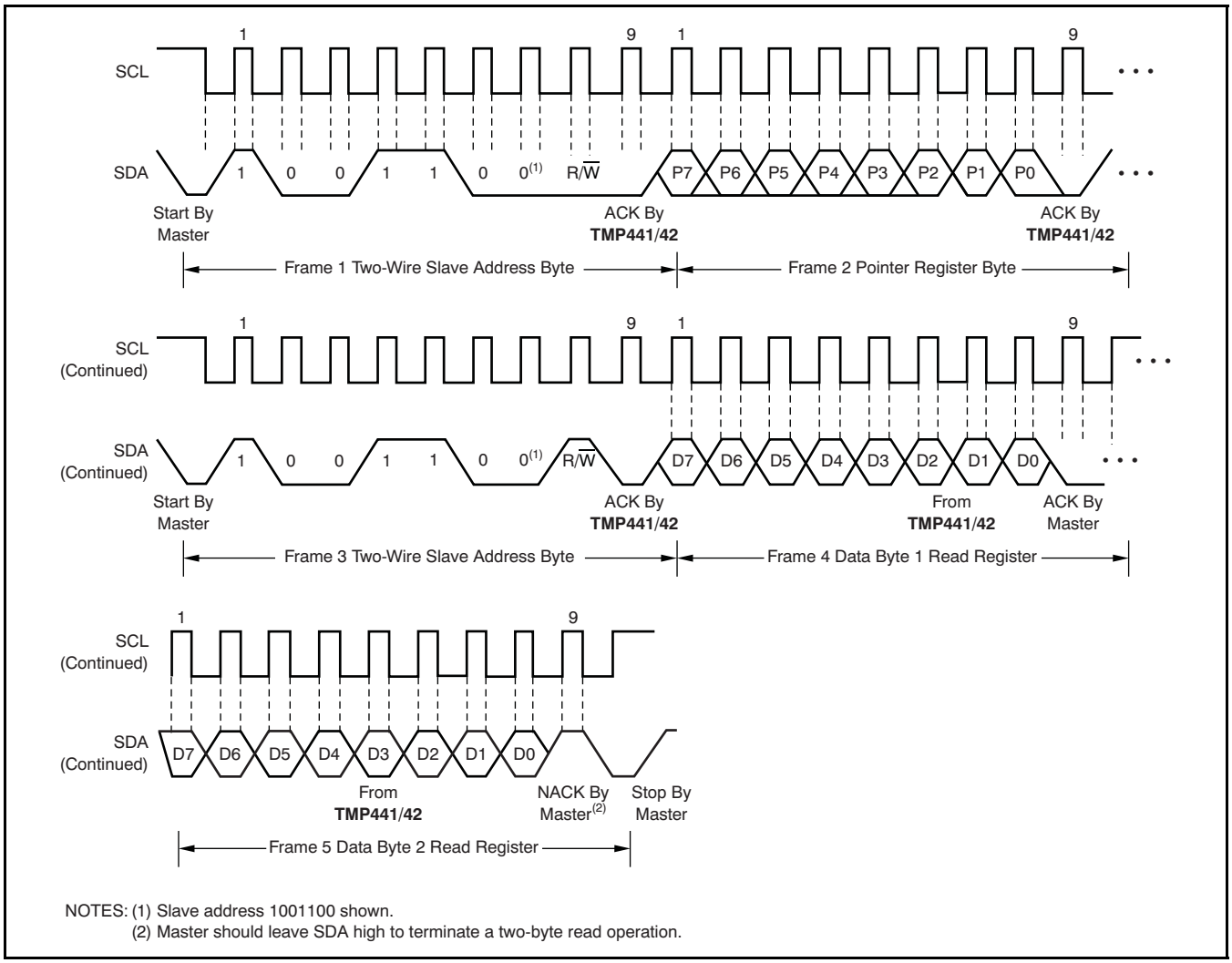

NOTES: (1) Slave address 1001100 shown.
(2) Master should leave SDA high to terminate a two-byte read operation.

Figure 18. Two-Wire Timing Diagram for Two-Byte Read Format

HIGH-SPEED MODE

In order for the Two-Wire bus to operate at frequencies above 400kHz, the master device must issue a High-Speed mode (Hs-mode) master code (0000 1xxx) as the first byte after a START condition to switch the bus to high-speed operation. The TMP441/42 acknowledge this byte, but switch the input filters on SDA and SCL and the output filter on SDA to operate in Hs-mode, allowing transfers at up to 3.4MHz. After the Hs-mode master code has been issued, the master transmits a Two-Wire slave address to initiate a data transfer operation. The bus continues to operate in Hs-mode until a STOP condition occurs on the bus. Upon receiving the STOP condition, the TMP441/42 switch the input and output filters back to fast mode operation.

TIMEOUT FUNCTION

The TMP441/42 reset the serial interface if either SCL or SDA are held low for 32ms (typical) between a START and STOP condition. If the TMP441/42 are holding the bus low, they release the bus and waits for a START condition. To avoid activating the timeout function, it is necessary to maintain a communication speed of at least 1kHz for the SCL operating frequency.

SHUTDOWN MODE (SD)

The TMP441/42 Shutdown Mode allows maximum power to be saved by shutting down all device circuitry other than the serial interface, reducing current consumption to typically less than 3µA; see Figure 6, *Shutdown Quiescent Current vs Supply Voltage*. Shutdown Mode is enabled when the SD bit of the Configuration Register is high; the device shuts down once the current conversion is completed. When SD is low, the device maintains a continuous conversion state.

SENSOR FAULT

The TMP441/42 can sense a fault at the DXP input resulting from incorrect diode connection and can sense an open circuit. Short-circuit conditions return a value of –64°C. The detection circuitry consists of a voltage comparator that trips when the voltage at DXP exceeds (V+) – 0.6V (typical). The comparator output is continuously checked during a conversion. If a fault is detected, the OPEN bit (bit 0) in the temperature result register is set to '1' and the rest of the register bits should be ignored.

When not using the remote sensor with the TMP441/42, the DXP and DXN inputs must be connected together to prevent meaningless fault warnings.

UNDERVOLTAGE LOCKOUT

The TMP441/42 sense when the power-supply voltage has reached a minimum voltage level for the ADC to function. The detection circuitry consists of a voltage comparator that enables the ADC after the power supply (V+) exceeds 2.45V (typical). The comparator output is continuously checked during a conversion. The TMP441/42 do not perform a temperature conversion if the power supply is not valid. The $\overline{\text{PVLD}}$ bit (bit 1, see Table 3) of the Local/Remote Temperature Register is set to '1' and the temperature result may be incorrect.

GENERAL CALL RESET

The TMP441/42 support reset via the Two-Wire General Call address 00h (0000 0000b). The TMP441/42 acknowledge the General Call address and respond to the second byte. If the second byte is 06h (0000 0110b), the TMP441/42 execute a software reset. This software reset restores the power-on reset state to all TMP441/42 registers, and aborts any conversion in progress. The TMP441/42 take no action in response to other values in the second byte.

FILTERING

Remote junction temperature sensors are usually implemented in a noisy environment. Noise is frequently generated by fast digital signals and if not filtered properly will induce errors that can corrupt temperature measurements. The TMP441/42 have a built-in 65kHz filter on the inputs of DXP and DXN to minimize the effects of noise. However, a differential low-pass filter can help attenuate unwanted coupled signals. If filtering is needed, suggested component values are 100pF and 50Ω on each input; exact values are application-specific. It is also recommended that the capacitor value remains between 0pF to 330pF with a series resistance less than 1kΩ.

Copyright © 2008–2009, Texas Instruments Incorporated

REMOTE SENSING

The TMP441/42 are designed to be used with either discrete transistors or substrate transistors built into processor chips and ASICs. Either NPN- or PNP-type transistors can be used, as long as the base-emitter junction is used as the remote temperature sense. NPN transistors must be diode-connected. PNP transistors can either be transistor- or diode-connected (see Figure 12).

Errors in remote temperature sensor readings are typically the consequence of the ideality factor and current excitation used by the TMP441/42 versus the manufacturer-specified operating current for a given transistor. Some manufacturers specify a high-level and low-level current for the temperature-sensing substrate transistors. The TMP441/42 use 6µA for I_{LOW} and 120µA for I_{HIGH}. The TMP441/42 allow for different η-factor values; see the *η-Factor Correction Register* section. The ideality factor (η) is a measured characteristic of a remote temperature sensor diode as compared to an ideal diode.

The ideality factor for the TMP441/42 is trimmed to be 1.008. For transistors that have an ideality factor that does not match the TMP441/42, Equation 6 can be used to calculate the temperature error. Note that for the equation to be used correctly, actual temperature (°C) must be converted to kelvins (K).

$$T_{err} = \left(\frac{\eta - 1.008}{1.008}\right) \times (273.15 + T\ (^{\circ}C)) \quad (6)$$

Where:

η = ideality factor of remote temperature sensor
T(°C) = actual temperature
T_{ERR} = error in TMP441/42 due to n ≠ 1.008
Degree delta is the same for °C and K

For η = 1.004 and T(°C) = 100°C:

$$T_{ERR} = \left(\frac{1.004 - 1.008}{1.008}\right) \times (273.15 + 100^{\circ}C)$$

$$T_{ERR} = 1.48^{\circ}C \quad (7)$$

If a discrete transistor is used as the remote temperature sensor with the TMP441/42, the best accuracy can be achieved by selecting the transistor according to the following criteria:

1. Base-emitter voltage > 0.25V at 6µA, at the highest sensed temperature.
2. Base-emitter voltage < 0.95V at 120µA, at the lowest sensed temperature.
3. Base resistance < 100Ω.
4. Tight control of V_{BE} characteristics indicated by small variations in h_{FE} (that is, 50 to 150).

Based on these criteria, two recommended small-signal transistors are the 2N3904 (NPN) or 2N3906 (PNP).

MEASUREMENT ACCURACY AND THERMAL CONSIDERATIONS

The temperature measurement accuracy of the TMP441/42 depends on the remote and/or local temperature sensor being at the same temperature as the system point being monitored. Clearly, if the temperature sensor is not in good thermal contact with the part of the system being monitored, then there will be a delay in the response of the sensor to a temperature change in the system. For remote temperature-sensing applications that use a substrate transistor (or a small, SOT23 transistor) placed close to the device being monitored, this delay is usually not a concern.

The local temperature sensor inside the TMP441/42 monitors the ambient air around the device. The thermal time constant for the TMP441/42 is approximately two seconds. This constant implies that if the ambient air changes quickly by 100°C, it would take the TMP441/42 approximately 10 seconds (that is, five thermal time constants) to settle to within 1°C of the final value. In most applications, the TMP441/42 package is in electrical, and therefore thermal, contact with the printed circuit board (PCB), as well as subjected to forced airflow. The accuracy of the measured temperature directly depends on how accurately the PCB and forced airflow temperatures represent the temperature that the TMP441/42 is measuring. Additionally, the internal power dissipation of the TMP441/42 can cause the temperature to rise above the ambient or PCB temperature. The internal power dissipated as a result of exciting the remote temperature sensor is negligible because of the small currents used. For a 5.5V supply and maximum conversion rate of eight conversions per second, the TMP441/42 dissipate 5.2mW (PD_{IQ} = 5.5V × 950µA). A θ_{JA} of 100°C/W causes the junction temperature to rise approximately +0.23°C above the ambient.

Copyright © 2008–2009, Texas Instruments Incorporated

LAYOUT CONSIDERATIONS

Remote temperature sensing on the TMP441/42 measures very small voltages using very low currents; therefore, noise at the IC inputs must be minimized. Most applications using the TMP441/42 will have high digital content, with several clocks and logic level transitions creating a noisy environment. Layout should adhere to the following guidelines:

1. Place the TMP441/42 as close to the remote junction sensor as possible.
2. Route the DXP and DXN traces next to each other and shield them from adjacent signals through the use of ground guard traces, as shown in Figure 19. If a multilayer PCB is used, bury these traces between ground or V_{DD} planes to shield them from extrinsic noise sources. 5 mil (0.005 in, or 0,127 mm) PCB traces are recommended.
3. Minimize additional thermocouple junctions caused by copper-to-solder connections. If these junctions are used, make the same number and approximate locations of copper-to-solder connections in both the DXP and DXN connections to cancel any thermocouple effects.
4. Use a 0.1µF local bypass capacitor directly between the V+ and GND of the TMP441/42, as shown in Figure 20. Minimize filter capacitance between DXP and DXN to 330pF or less for optimum measurement performance. This capacitance includes any cable capacitance between the remote temperature sensor and TMP441/42.
5. If the connection between the remote temperature sensor and the TMP441/42 is less than 8 in (20,32 cm) long, use a twisted-wire pair connection. Beyond 8 in, use a twisted, shielded pair with the shield grounded as close to the TMP441/42 as possible. Leave the remote sensor connection end of the shield wire open to avoid ground loops and 60Hz pickup.
6. Thoroughly clean and remove all flux residue in and around the pins of the TMP441/42 to avoid temperature offset readings as a result of leakage paths between DXP or DXN and GND, or between DXP or DXN and V+.

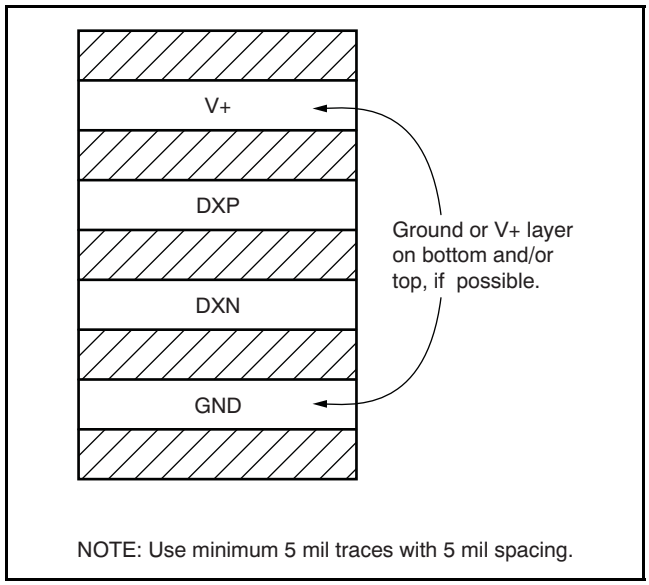

Figure 19. Suggested PCB Layer Cross-Section

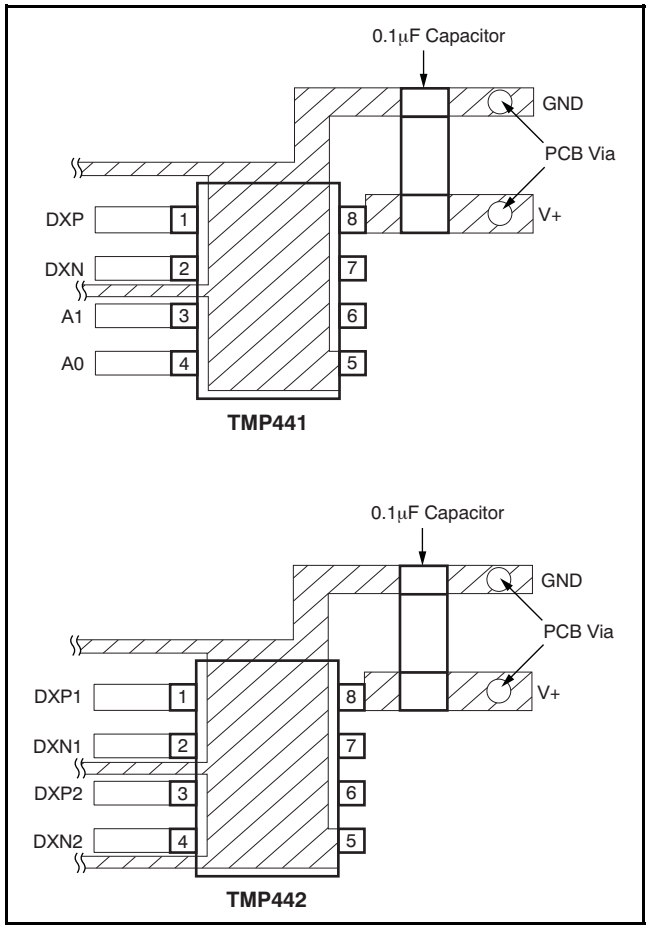

Figure 20. Suggested Bypass Capacitor Placement and Trace Shielding

Copyright © 2008–2009, Texas Instruments Incorporated

PACKAGING INFORMATION

Orderable part number	Status (1)	Material type (2)	Package | Pins	Package qty | Carrier	RoHS (3)	Lead finish/ Ball material (4)	MSL rating/ Peak reflow (5)	Op temp (°C)	Part marking (6)
TMP441AIDCNR	Active	Production	SOT-23 (DCN) | 8	3000 | LARGE T&R	Yes	NIPDAU	Level-2-260C-1 YEAR	-40 to 125	DIGI
TMP441AIDCNR.A	Active	Production	SOT-23 (DCN) | 8	3000 | LARGE T&R	Yes	NIPDAU	Level-2-260C-1 YEAR	-40 to 125	DIGI
TMP441AIDCNR.B	Active	Production	SOT-23 (DCN) | 8	3000 | LARGE T&R	Yes	NIPDAU	Level-2-260C-1 YEAR	-40 to 125	DIGI
TMP441AIDCNRG4	Active	Production	SOT-23 (DCN) | 8	3000 | LARGE T&R	Yes	NIPDAU	Level-2-260C-1 YEAR	-40 to 125	DIGI
TMP441AIDCNRG4.A	Active	Production	SOT-23 (DCN) | 8	3000 | LARGE T&R	Yes	NIPDAU	Level-2-260C-1 YEAR	-40 to 125	DIGI
TMP441AIDCNRG4.B	Active	Production	SOT-23 (DCN) | 8	3000 | LARGE T&R	Yes	NIPDAU	Level-2-260C-1 YEAR	-40 to 125	DIGI
TMP441AIDCNT	Obsolete	Production	SOT-23 (DCN) | 8	-	-	Call TI	Call TI	-40 to 125	DIGI
TMP442ADCNR	Active	Production	SOT-23 (DCN) | 8	3000 | LARGE T&R	Yes	NIPDAU	Level-2-260C-1 YEAR	-40 to 125	DIHI
TMP442ADCNR.A	Active	Production	SOT-23 (DCN) | 8	3000 | LARGE T&R	Yes	NIPDAU	Level-2-260C-1 YEAR	-40 to 125	DIHI
TMP442ADCNR.B	Active	Production	SOT-23 (DCN) | 8	3000 | LARGE T&R	Yes	NIPDAU	Level-2-260C-1 YEAR	-40 to 125	DIHI
TMP442ADCNT	Obsolete	Production	SOT-23 (DCN) | 8	-	-	Call TI	Call TI	-40 to 125	DIHI
TMP442BDCNR	Active	Production	SOT-23 (DCN) | 8	3000 | LARGE T&R	Yes	NIPDAU	Level-2-260C-1 YEAR	-40 to 125	DIJI
TMP442BDCNR.B	Active	Production	SOT-23 (DCN) | 8	3000 | LARGE T&R	Yes	NIPDAU	Level-2-260C-1 YEAR	-40 to 125	DIJI
TMP442BDCNT	Obsolete	Production	SOT-23 (DCN) | 8	-	-	Call TI	Call TI	-40 to 125	DIJI

(1) **Status:** For more details on status, see our product life cycle.

(2) **Material type:** When designated, preproduction parts are prototypes/experimental devices, and are not yet approved or released for full production. Testing and final process, including without limitation quality assurance, reliability performance testing, and/or process qualification, may not yet be complete, and this item is subject to further changes or possible discontinuation. If available for ordering, purchases will be subject to an additional waiver at checkout, and are intended for early internal evaluation purposes only. These items are sold without warranties of any kind.

(3) **RoHS values:** Yes, No, RoHS Exempt. See the TI RoHS Statement for additional information and value definition.

(4) **Lead finish/Ball material:** Parts may have multiple material finish options. Finish options are separated by a vertical ruled line. Lead finish/Ball material values may wrap to two lines if the finish value exceeds the maximum column width.

(5) **MSL rating/Peak reflow:** The moisture sensitivity level ratings and peak solder (reflow) temperatures. In the event that a part has multiple moisture sensitivity ratings, only the lowest level per JEDEC standards is shown. Refer to the shipping label for the actual reflow temperature that will be used to mount the part to the printed circuit board.

(6) **Part marking:** There may be an additional marking, which relates to the logo, the lot trace code information, or the environmental category of the part.

Multiple part markings will be inside parentheses. Only one part marking contained in parentheses and separated by a "~" will appear on a part. If a line is indented then it is a continuation of the previous line and the two combined represent the entire part marking for that device.

Important Information and Disclaimer: The information provided on this page represents TI's knowledge and belief as of the date that it is provided. TI bases its knowledge and belief on information provided by third parties, and makes no representation or warranty as to the accuracy of such information. Efforts are underway to better integrate information from third parties. TI has taken and continues to take reasonable steps to provide representative and accurate information but may not have conducted destructive testing or chemical analysis on incoming materials and chemicals. TI and TI suppliers consider certain information to be proprietary, and thus CAS numbers and other limited information may not be available for release.

In no event shall TI's liability arising out of such information exceed the total purchase price of the TI part(s) at issue in this document sold by TI to Customer on an annual basis.

TAPE AND REEL INFORMATION

REEL DIMENSIONS

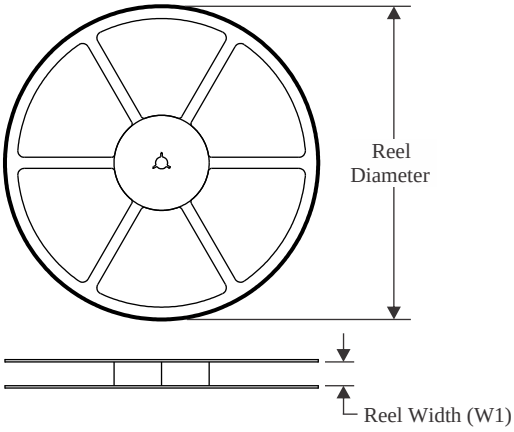

TAPE DIMENSIONS

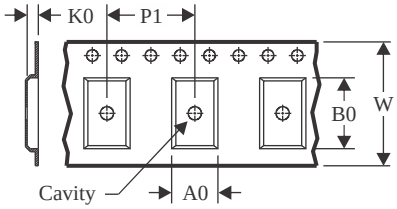

A0	Dimension designed to accommodate the component width
B0	Dimension designed to accommodate the component length
K0	Dimension designed to accommodate the component thickness
W	Overall width of the carrier tape
P1	Pitch between successive cavity centers

QUADRANT ASSIGNMENTS FOR PIN 1 ORIENTATION IN TAPE

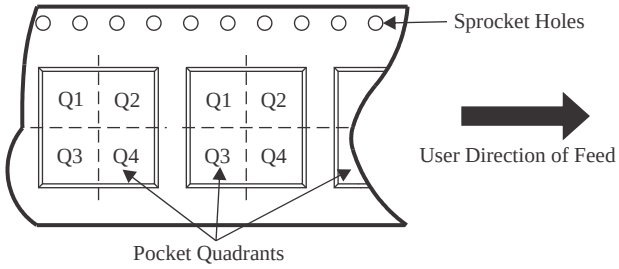

*All dimensions are nominal

Device	Package Type	Package Drawing	Pins	SPQ	Reel Diameter (mm)	Reel Width W1 (mm)	A0 (mm)	B0 (mm)	K0 (mm)	P1 (mm)	W (mm)	Pin1 Quadrant
TMP441AIDCNR	SOT-23	DCN	8	3000	179.0	8.4	3.2	3.2	1.4	4.0	8.0	Q3
TMP441AIDCNRG4	SOT-23	DCN	8	3000	179.0	8.4	3.2	3.2	1.4	4.0	8.0	Q3
TMP442ADCNR	SOT-23	DCN	8	3000	179.0	8.4	3.2	3.2	1.4	4.0	8.0	Q3
TMP442BDCNR	SOT-23	DCN	8	3000	179.0	8.4	3.2	3.2	1.4	4.0	8.0	Q3

TAPE AND REEL BOX DIMENSIONS

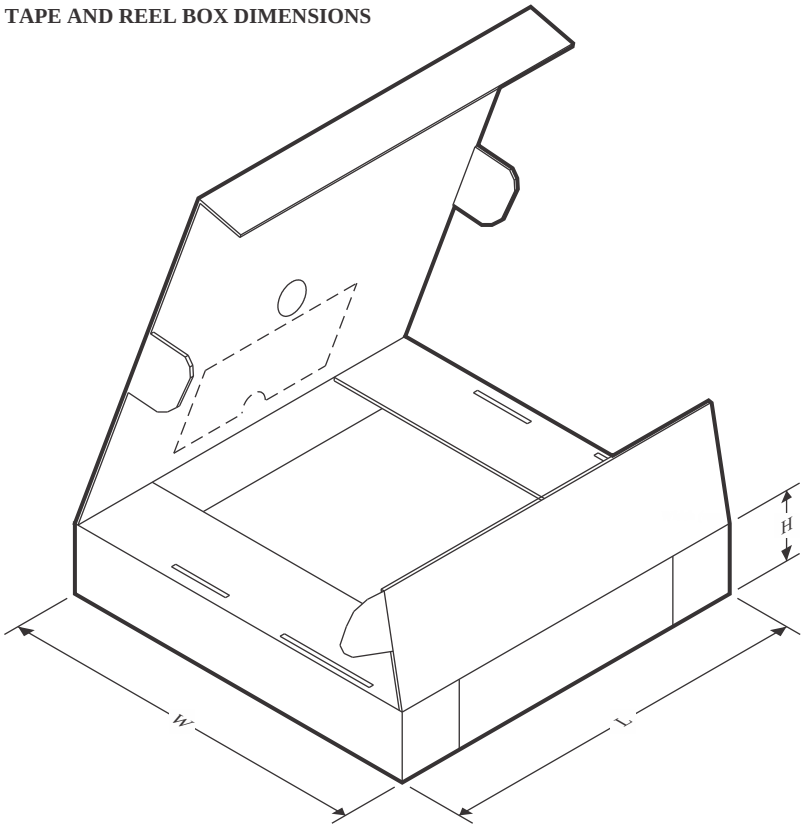

*All dimensions are nominal

Device	Package Type	Package Drawing	Pins	SPQ	Length (mm)	Width (mm)	Height (mm)
TMP441AIDCNR	SOT-23	DCN	8	3000	213.0	191.0	35.0
TMP441AIDCNRG4	SOT-23	DCN	8	3000	213.0	191.0	35.0
TMP442ADCNR	SOT-23	DCN	8	3000	213.0	191.0	35.0
TMP442BDCNR	SOT-23	DCN	8	3000	213.0	191.0	35.0

DCN (R–PDSO–G8) PLASTIC SMALL–OUTLINE PACKAGE (DIE DOWN)

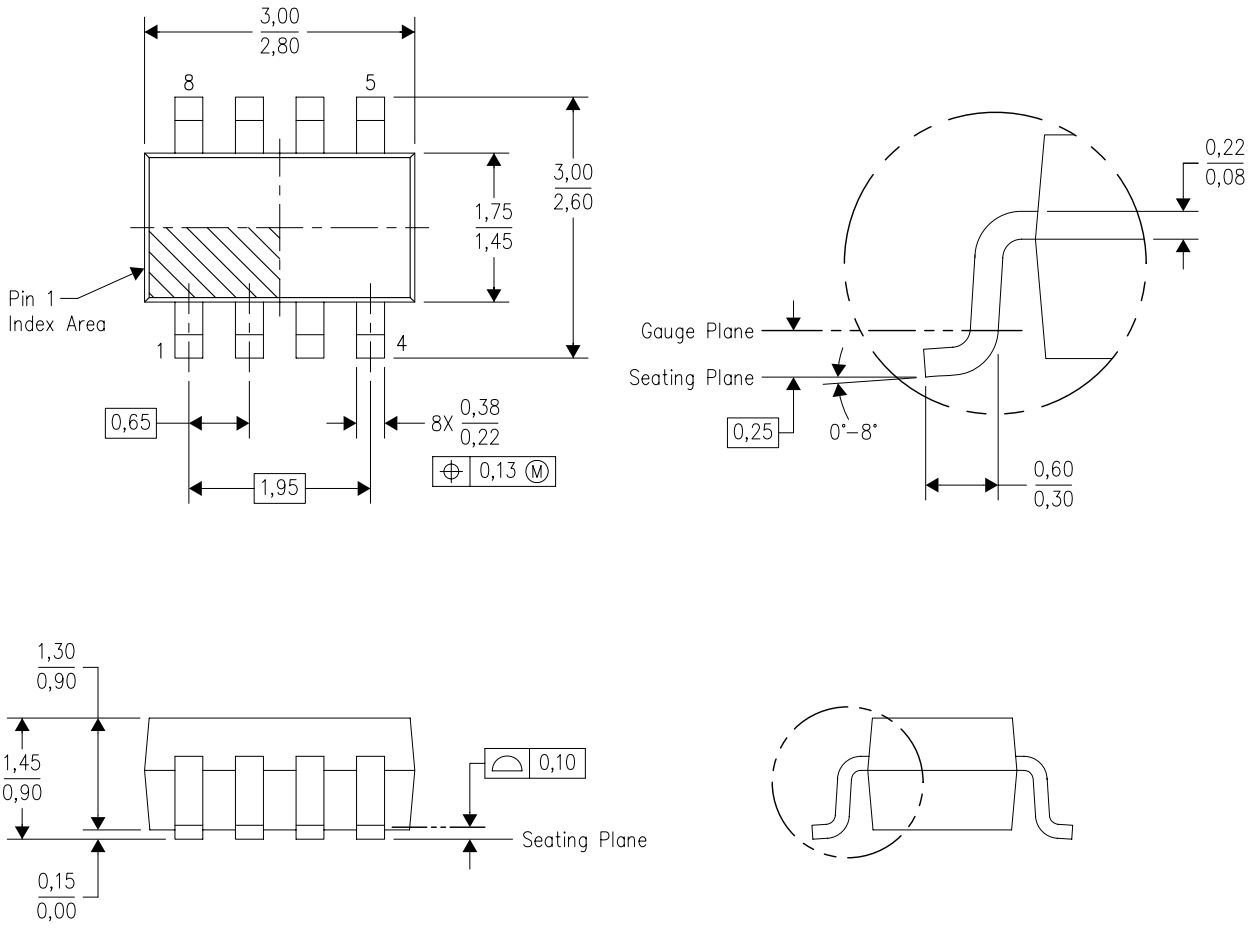

NOTES:
A. All linear dimensions are in millimeters.
B. This drawing is subject to change without notice.
C. Package outline exclusive of metal burr & dambar protrusion/intrusion.
D. Package outline inclusive of solder plating.
E. A visual index feature must be located within the Pin 1 index area.
F. Falls within JEDEC MO–178 Variation BA.
G. Body dimensions do not include flash or protrusion. Mold flash and protrusion shall not exceed 0.25 per side.

DCN (R–PDSO–G8) PLASTIC SMALL–OUTLINE PACKAGE (DIE DOWN)

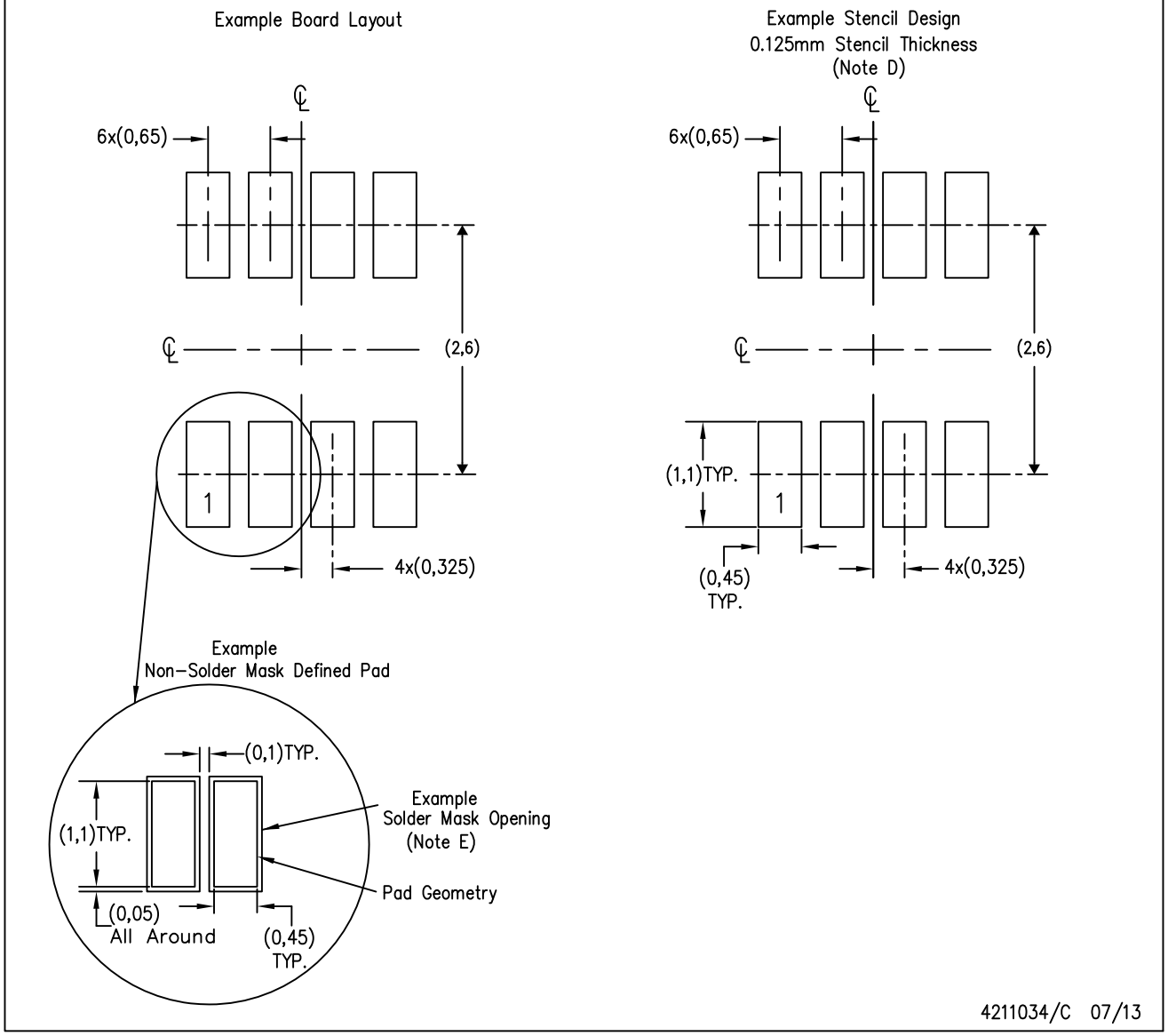

NOTES:
A. All linear dimensions are in millimeters.
B. This drawing is subject to change without notice.
C. Publication IPC–7351 is recommended for alternate designs.
D. Laser cutting apertures with trapezoidal walls and also rounding corners will offer better paste release. Customers should contact their board assembly site for stencil design recommendations. Refer to IPC–7525.
E. Customers should contact their board fabrication site for solder mask tolerances between and around signal pads.

IMPORTANT NOTICE AND DISCLAIMER

TI PROVIDES TECHNICAL AND RELIABILITY DATA (INCLUDING DATASHEETS), DESIGN RESOURCES (INCLUDING REFERENCE DESIGNS), APPLICATION OR OTHER DESIGN ADVICE, WEB TOOLS, SAFETY INFORMATION, AND OTHER RESOURCES “AS IS” AND WITH ALL FAULTS, AND DISCLAIMS ALL WARRANTIES, EXPRESS AND IMPLIED, INCLUDING WITHOUT LIMITATION ANY IMPLIED WARRANTIES OF MERCHANTABILITY, FITNESS FOR A PARTICULAR PURPOSE OR NON-INFRINGEMENT OF THIRD PARTY INTELLECTUAL PROPERTY RIGHTS.

These resources are intended for skilled developers designing with TI products. You are solely responsible for (1) selecting the appropriate TI products for your application, (2) designing, validating and testing your application, and (3) ensuring your application meets applicable standards, and any other safety, security, regulatory or other requirements.

These resources are subject to change without notice. TI grants you permission to use these resources only for development of an application that uses the TI products described in the resource. Other reproduction and display of these resources is prohibited. No license is granted to any other TI intellectual property right or to any third party intellectual property right. TI disclaims responsibility for, and you fully indemnify TI and its representatives against any claims, damages, costs, losses, and liabilities arising out of your use of these resources.

TI’s products are provided subject to TI’s Terms of Sale, TI’s General Quality Guidelines, or other applicable terms available either on ti.com or provided in conjunction with such TI products. TI’s provision of these resources does not expand or otherwise alter TI’s applicable warranties or warranty disclaimers for TI products. Unless TI explicitly designates a product as custom or customer-specified, TI products are standard, catalog, general purpose devices.

TI objects to and rejects any additional or different terms you may propose.

Copyright © 2025, Texas Instruments Incorporated

Last updated 10/2025