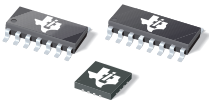

Temperature and Power Supply System Monitors

Check for Samples: TMP512, TMP513

FEATURES

- **±1°C REMOTE DIODE SENSORS**
- **±1°C LOCAL TEMPERATURE SENSOR**
- **SERIES RESISTANCE CANCELLATION**
- **n-FACTOR CORRECTION**
- **TEMPERATURE ALERT FUNCTION**
- **AVERAGING**
- **12-BIT RESOLUTION**
- **DIODE FAULT DETECTION**
- **SENSES BUS VOLTAGES FROM 0V TO +26V**
- **REPORTS CURRENT IN AMPS, VOLTAGE IN VOLTS AND POWER IN WATTS**
- **HIGH ACCURACY: 1% MAX OVER TEMP**
- **WATCHDOG LIMITS:**
  - **Upper Over-Limit**
  - **Lower Under-Limit**

APPLICATIONS

- **DESKTOP AND NOTEBOOK COMPUTERS**
- **SERVERS**
- **INDUSTRIAL CONTROLLERS**
- **CENTRAL OFFICE TELECOM EQUIPMENT**
- **LCD/ DLP®/LCOS PROJECTORS**
- **STORAGE AREA NETWORKS (SAN)**

DESCRIPTION

The TMP512 (dual-channel) and TMP513 (triple-channel) are system monitors that include remote sensors, a local temperature sensor, and a high-side current shunt monitor. These system monitors have the capability of measuring remote temperatures, on-chip temperatures, and system voltage/power/current consumption.

The remote temperature sensor diode-connected transistors are typically low-cost, NPN- or PNP-type transistors or diodes that are an integral part of microcontrollers, microprocessors, or FPGAs. Remote accuracy is ±1°C for multiple IC manufacturers, with no calibration needed. The two-wire serial interface accepts SMBus™ or two-wire write and read commands.

The onboard current shunt monitor is a high-side current shunt and power monitor. It monitors both the shunt drop and supply voltage. A programmable calibration value (along with the TMP512/TMP513 internal digital multiplier) enables direct readout in amps; an additional multiplication calculates power in watts. The TMP512 and TMP513 both feature two separate onboard watchdog capabilities: an over-limit comparator and a lower-limit comparator.

These devices use a single +3V to +26V supply, drawing a maximum of 1.4mA of supply current, and they are specified for operation from –40°C to +125°C.

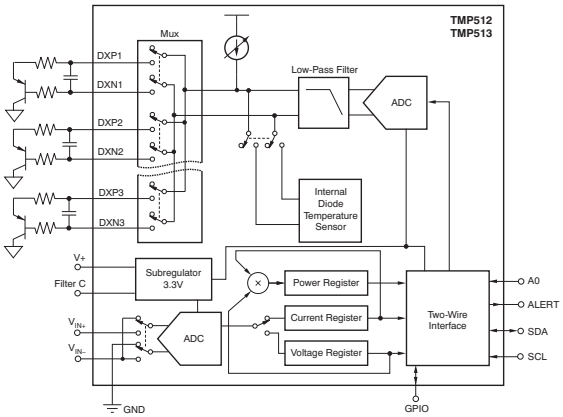

Please be aware that an important notice concerning availability, standard warranty, and use in critical applications of Texas Instruments semiconductor products and disclaimers thereto appears at the end of this data sheet.

DLP is a registered trademark of Texas Instruments.
SMBus is a trademark of Intel Corporation.
All other trademarks are the property of their respective owners.

UNLESS OTHERWISE NOTED this document contains PRODUCTION DATA information current as of publication date. Products conform to specifications per the terms of Texas Instruments standard warranty. Production processing does not necessarily include testing of all parameters.

Copyright © 2010–2011, Texas Instruments Incorporated

This integrated circuit can be damaged by ESD. Texas Instruments recommends that all integrated circuits be handled with appropriate precautions. Failure to observe proper handling and installation procedures can cause damage.

ESD damage can range from subtle performance degradation to complete device failure. Precision integrated circuits may be more susceptible to damage because very small parametric changes could cause the device not to meet its published specifications.

PACKAGE INFORMATION(1)

PRODUCT	PACKAGE-LEAD	PACKAGE DESIGNATOR	PACKAGE MARKING
TMP512	SO-14	D	TMP512A
	QFN-16	RSA	TMP512A
TMP513	SO-16	D	TMP513A
	QFN-16	RSA	TMP513A

(1) For the most current package and ordering information see the Package Option Addendum at the end of this document, or visit the TMP512/TMP513 product folder at www.ti.com.

ABSOLUTE MAXIMUM RATINGS(1)

Over operating free-air temperature range (unless otherwise noted).

		TMP512, TMP513	UNIT
Supply Voltage, V+		26	V
Filter C	Voltage	GND – 0.3 to +6	V
	Current	10	mA
Analog Inputs, V_{IN+}, V_{IN-}	Differential (V_{IN+}) – (V_{IN-})(2)	–26 to +26	V
	Common-Mode	–0.3 to +26	V
Open-Drain Digital Outputs		GND – 0.3 to +6	V
GPIO, DXP, DXN		GND – 0.3 to V+ + 0.3	V
Input Current Into Any Pin		5	mA
Open-Drain Digital Output Current		10	mA
Storage Temperature		–65 to +150	°C
Junction Temperature		+150	°C
ESD Ratings	Human Body Model (HBM)	2000	V
	Charged-Device Model (CDM)	1000	V
	Machine Model (MM)	150	V

(1) Stresses above these ratings may cause permanent damage. Exposure to absolute maximum conditions for extended periods may degrade device reliability. These are stress ratings only, and functional operation of the device at these or any other conditions beyond those specified is not implied.
(2) V_{IN+} and V_{IN-} may have a differential voltage of –26V to +26V; however, the voltage at these pins must not exceed the range –0.3V to +26V.

Copyright © 2010–2011, Texas Instruments Incorporated

THERMAL INFORMATION

THERMAL METRIC[1]		TMP512	TMP512AIRSAR TMP512AIRSAT	UNITS
		D (SOIC)	RSA	
		14	16	
θ_{JA}	Junction-to-ambient thermal resistance	91.1	34.3	°C/W
$\theta_{JC(top)}$	Junction-to-case(top) thermal resistance	10.6	35.4	
θ_{JB}	Junction-to-board thermal resistance	40.3	11.6	
ψ_{JT}	Junction-to-top characterization parameter	49.1	0.5	
ψ_{JB}	Junction-to-board characterization parameter	47.5	11.6	
$\theta_{JC(bottom)}$	Junction-to-case(bottom) thermal resistance	N/A	2.7	

(1) For more information about traditional and new thermal metrics, see the *IC Package Thermal Metrics* application report, SPRA953.

THERMAL INFORMATION

THERMAL METRIC[1]		TMP513AID	TMP513AIRSAR TMP513AIRSAT	UNITS
		D (SOIC)	RSA	
		16	16	
θ_{JA}	Junction-to-ambient thermal resistance	77.6	44.8	°C/W
$\theta_{JC(top)}$	Junction-to-case(top) thermal resistance	55.0	43.8	
θ_{JB}	Junction-to-board thermal resistance	49.9	14.7	
ψ_{JT}	Junction-to-top characterization parameter	3.5	0.4	
ψ_{JB}	Junction-to-board characterization parameter	32.2	14.5	
$\theta_{JC(bottom)}$	Junction-to-case(bottom) thermal resistance	N/A	2.6	

(1) For more information about traditional and new thermal metrics, see the *IC Package Thermal Metrics* application report, SPRA953.

Copyright © 2010–2011, Texas Instruments Incorporated

ELECTRICAL CHARACTERISTICS: V+ = +12V

Boldface limits apply over the specified temperature range, **T_A = –40°C to +125°C.**
At T_A = +25°C, V+ = 12V, V_{SENSE} = (V_{IN+} – $V_{IN–}$) = 32mV, PGA = ÷ 1, and BRNG[1] = 1, unless otherwise noted.

PARAMETER		TEST CONDITIONS	TMP512, TMP513 MIN	TYP	MAX	UNIT
INPUT						
Current Sense (Input) Voltage Range		PGA = ÷ 1	0		±40	mV
		PGA = ÷ 2	0		±80	mV
		PGA = ÷ 4	0		±160	mV
		PGA = ÷ 8	0		±320	mV
Bus Voltage (Input Voltage) Range[2]		BRNG = 0	0		16	V
		BRNG = 1	0		32	V
Common-Mode Rejection	CMRR	V_{IN+} = 0V to 26V	100	120		dB
Offset Voltage, RTI[3]	V_{OS}	PGA = ÷ 1		±10	±100	µV
		PGA = ÷ 2		±20	±125	µV
		PGA = ÷ 4		±30	±150	µV
		PGA = ÷ 8		±40	±200	µV
vs Temperature				**0.2**		**µV/°C**
vs Power Supply	PSRR	V+ = 3V to 5.5V, Configuration 3[4]		10		µV/V
		V+ = 4.5V to 26V, subregulator supply		0.1		µV/V
Current Sense Gain Error				±0.04		%
vs Temperature				**0.0025**		**%**
Input Impedance		Active Mode				
V_{IN+} Pin				20		µA
$V_{IN–}$ Pin				20 || 320		µA || kΩ
Input Leakage		Power-Down Mode				
V_{IN+} Pin				0.1	0.5	µA
$V_{IN–}$ Pin				0.1	0.5	µA
DC ACCURACY						
ADC Basic Resolution				12		Bits
1 LSB Step Size						
Shunt Voltage				10		µV
Bus Voltage				4		mV
Current Measurement Error				±0.2	±0.5	%
over Temperature					**±1**	**%**
Bus Voltage Measurement Error				±0.2	±0.5	%
over Temperature					**±1**	**%**
Differential Nonlinearity				±0.1		LSB
ADC TIMING						
ADC Conversion Time		12-Bit		665	733	µs
		11-Bit		345	380	µs
		10-Bit		185	204	µs
		9-Bit		105	117	µs

(1) BRNG is bit 13 of Configuration Register 1.
(2) This parameter only expresses the full-scale range of the ADC scaling. In no event should more than 26V be applied to this device.
(3) Referred-to-input (RTI).
(4) See *Subregulator* section.

Copyright © 2010–2011, Texas Instruments Incorporated

ELECTRICAL CHARACTERISTICS: V+ = +12V (continued)

Boldface limits apply over the specified temperature range, **T_A = –40°C to +125°C.**
At T_A = +25°C, V+ = 12V, V_{SENSE} = (V_{IN+} – $V_{IN–}$) = 32mV, PGA = ÷ 1, and BRNG[1] = 1, unless otherwise noted.

PARAMETER		TEST CONDITIONS	TMP512, TMP513 MIN	TYP	MAX	UNIT
TEMPERATURE ERROR						
Local Temperature Sensor	TE_{LOCAL}	T_A = –40°C to +125°C		±1.25	±2.5	°C
		T_A = +15°C to +85°C, V+ = 12V		±0.25	±1	°C
Remote Temperature Sensor[5]	TE_{REMOTE}	T_A = +15°C to +85°C, T_D = –40°C to+ 150°C, V+ = 12V		±0.25	±1	°C
		T_A = –40°C to +100°C, T_D = –40°C to +150°C, V+ = 12V		±1	±3	°C
		T_A = –40°C to +125°C, T_D = –40°C to +150°C		±3	±5	°C
vs Supply, Local		V+ = 3V to 5.5V, Configuration 3[6]		0.2	0.5	°C/V
vs Supply, Remote		V+ = 3V to 5.5V, Configuration 3[6]		0.2	0.5	°C/V
		V+ = 4.5V to 26V, subregulator supply		0.01	0.05	°C/V
TEMPERATURE MEASUREMENT						
Conversion Time (per channel)			100	115	130	ms
Resolution						
Local Temperature Sensor				13		Bits
Remote Temperature Sensor				13		Bits
Remote Sensor Source Currents		Series Resistance 3kΩ max				
High				120		µA
Medium High				60		µA
Medium Low				12		µA
Low				6		µA
Default Non-Ideality Factor	n	TMP512/12 Optimized Ideality Factor		1.008		
SMBus						
Logic Input High Voltage (SCL, SDA, GPIO, A0)	**V_{IH}**		**2.1**			**V**
Logic Input Low Voltage (SCL, SDA, GPIO, A0)	**V_{IL}**				**0.8**	**V**
Hysteresis				500		mV
SMBus Output Low Sink Current			**6**			**mA**
SDA Output Low Voltage	**V_{OL}**	**I_{OUT} = 6mA**		**0.15**	**0.4**	**V**
Logic Input Current		**0 ≤ V_{IN} ≤ 6V**	**–1**		**1**	**µA**
SMBus Input Capacitance (SCL, SDA, GPIO, A0)				3		pF
SMBus Clock Frequency					**3.4**	**MHz**
SMBus Timeout[7]			**25**	**30**	**35**	**ms**
SCL Falling Edge to SDA Valid Time					**1**	**µs**
POWER SUPPLY						
Specified Supply Range[6]	V+		+3		+26	V
Quiescent Current				1	1.4	mA
Quiescent Current, Power-Down Mode				55	100	µA
Power-On Reset Threshold				2		V
TEMPERATURE RANGE						
Specified Temperature Range			–40		+125	°C

(5) Tested with one-shot measurements, and with less than 5Ω effective series resistance, and with 100pF differential input capacitance.
(6) See *Subregulator* section.
(7) SMBus timeout in the TMP512/13 resets the interface any time SCL or SDA is low for over 28ms.

Copyright © 2010–2011, Texas Instruments Incorporated

PIN CONFIGURATIONS

TMP512

D PACKAGE
SO-14
(TOP VIEW)

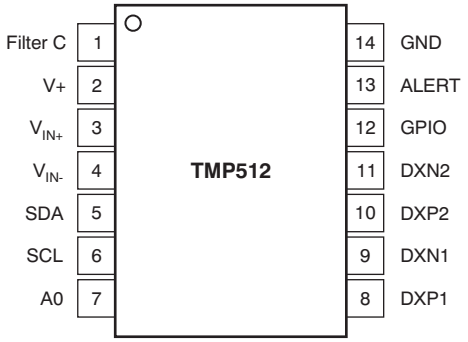

RSA PACKAGE
QFN-16
(TOP VIEW)

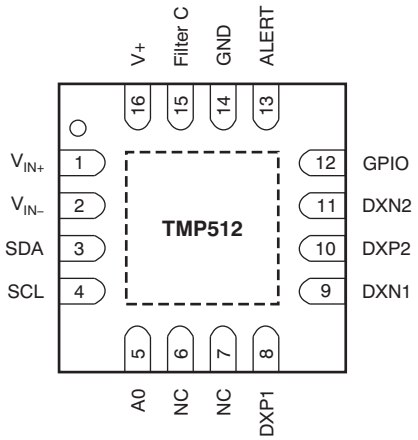

TMP512: PIN DESCRIPTIONS

D PACKAGE SO-16	RSA PACKAGE QFN-16	NAME	DESCRIPTION
1	15	Filter C	Subregulator output and filter capacitor pin.
2	16	V+	Positive supply voltage (3V to 26V) See Figure 22.
3	1	V_{IN+}	Positive differential shunt voltage. Connect to positive side of shunt resistor.
4	2	V_{IN-}	Negative differential shunt voltage. Connect to negative side of shunt resistor. Bus voltage is measured from this pin to ground.
5	3	SDA	Serial bus data line for SMBus, open-drain; requires pull-up resistor.
6	4	SCL	Serial bus clock line for SMBus, open-drain; requires pull-up resistor.
7	5	A0	Address pin
—	6	NC	Not connected
—	7	NC	Not connected
8	8	DXP1	Channel 1 positive connection to remote temperature sensor.
9	9	DXN1	Channel 1 negative connection to remote temperature sensor.
10	10	DXP2	Channel 2 positive connection to remote temperature sensor.
11	11	DXN2	Channel 2 negative connection to remote temperature sensor.
12	12	GPIO	General-purpose, user-programmable input/output. Totem-pole output. Connect to ground or supply through a resistor if not used. Default state is as an input.
13	13	ALERT	Open-drain SMBus alert output. Controlled in SMBus Alert Mask Register. Default state is disabled.
14	14	GND	Ground

Copyright © 2010–2011, Texas Instruments Incorporated

TMP513

D PACKAGE
SO-16
(TOP VIEW)

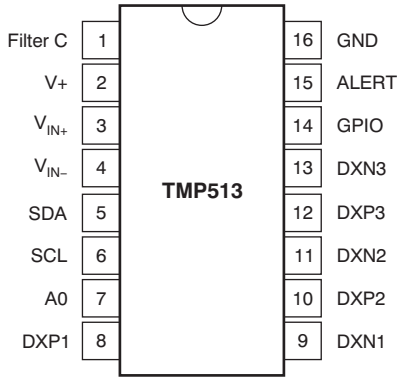

RSA PACKAGE
QFN-16
(TOP VIEW)

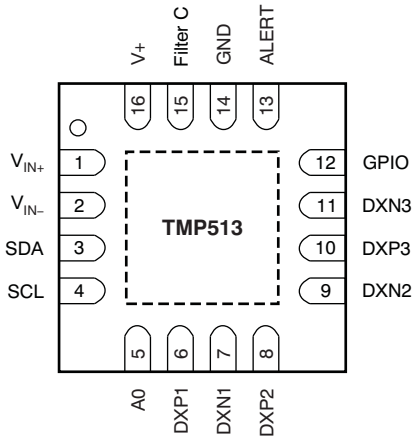

TMP513: PIN DESCRIPTIONS

D PACKAGE SO-16	RSA PACKAGE QFN-16	NAME	DESCRIPTION
1	15	Filter C	Subregulator output and filter capacitor pin.
2	16	V+	Positive supply voltage (3V to 26V) See Figure 22.
3	1	V_{IN+}	Positive differential shunt voltage. Connect to positive side of shunt resistor.
4	2	V_{IN-}	Negative differential shunt voltage. Connect to negative side of shunt resistor. Bus voltage is measured from this pin to ground.
5	3	SDA	Serial bus data line for SMBus, open-drain; requires pull-up resistor.
6	4	SCL	Serial bus clock line for SMBus, open-drain; requires pull-up resistor.
7	5	A0	Address pin
8	6	DXP1	Channel 1 positive connection to remote temperature sensor.
9	7	DXN1	Channel 1 negative connection to remote temperature sensor.
10	8	DXP2	Channel 2 positive connection to remote temperature sensor.
11	9	DXN2	Channel 2 negative connection to remote temperature sensor.
12	10	DXP3	Channel 3 positive connection to remote temperature sensor.
13	11	DXN3	Channel 3 negative connection to remote temperature sensor.
14	12	GPIO	General-purpose, user-programmable input/output. Totem-pole output. Connect to ground or supply through a resistor if not used. Default state is as an input.
15	13	ALERT	Open-drain SMBus alert output. Controlled in SMBus Alert Mask Register. Default state is disabled.
16	14	GND	Ground

Copyright © 2010–2011, Texas Instruments Incorporated

TYPICAL CHARACTERISTICS: V+ = +12V

At T_A = +25°C, V+ = 12V, V_{SENSE} = (V_{IN+} – V_{IN-}) = 32mV, PGA = ÷ 1, and BRNG = 1, unless otherwise noted.

FREQUENCY RESPONSE

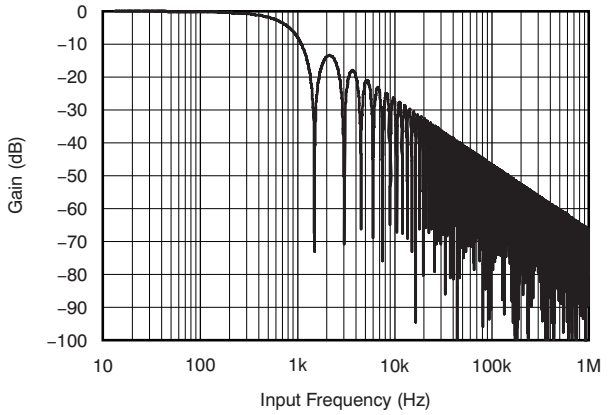

Figure 1.

REMOTE TEMPERATURE ERROR vs TEMPERATURE

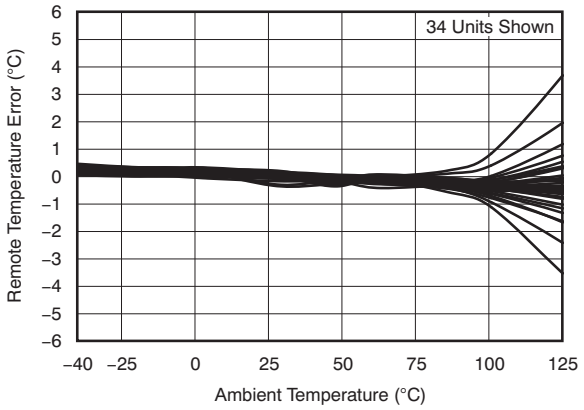

Figure 2.

LOCAL TEMPERATURE ERROR vs TEMPERATURE

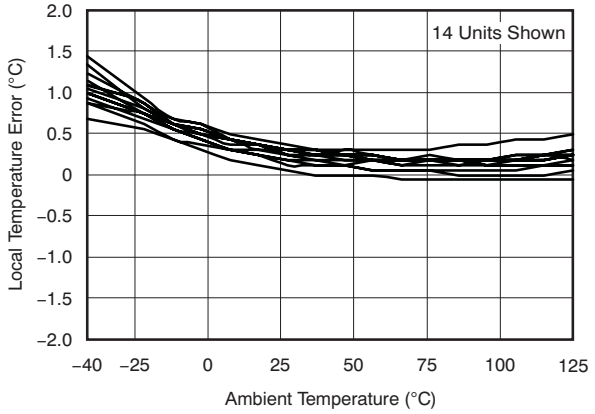

Figure 3.

SHUNT OFFSET vs TEMPERATURE

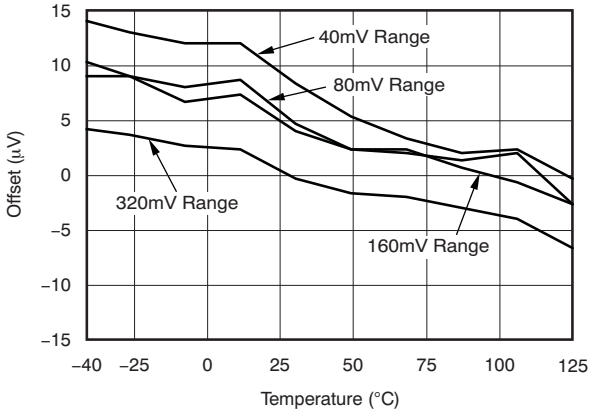

Figure 4.

SHUNT GAIN ERROR vs TEMPERATURE

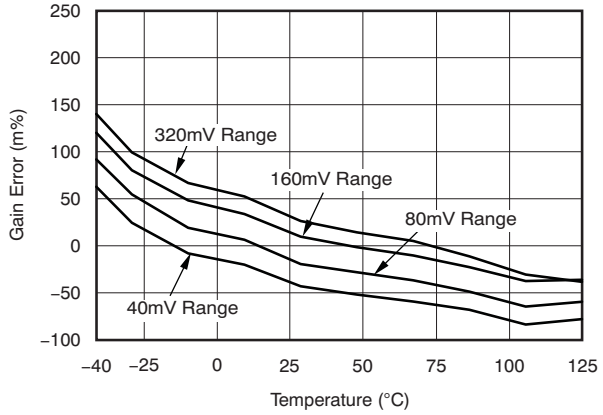

Figure 5.

BUS VOLTAGE OFFSET vs TEMPERATURE

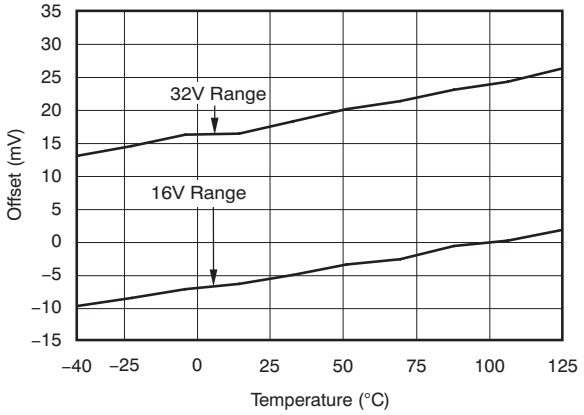

Figure 6.

Copyright © 2010–2011, Texas Instruments Incorporated

TYPICAL CHARACTERISTICS: V+ = +12V (continued)

At T_A = +25°C, V+ = 12V, V_{SENSE} = (V_{IN+} – V_{IN-}) = 32mV, PGA = ÷ 1, and BRNG = 1, unless otherwise noted.

BUS GAIN ERROR vs TEMPERATURE

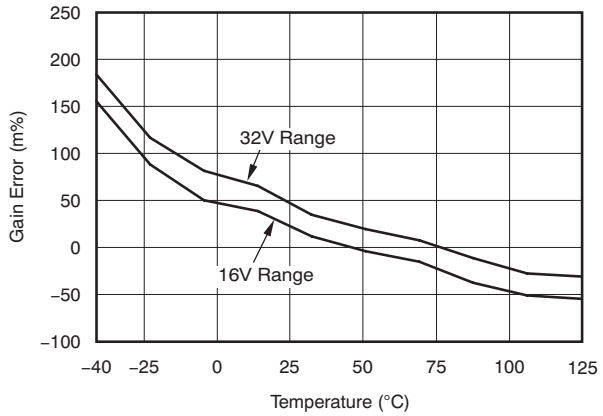

Figure 7.

INTEGRAL NONLINEARITY vs INPUT VOLTAGE

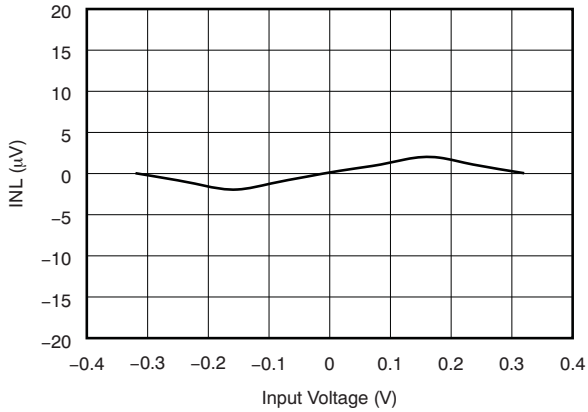

Figure 8.

INPUT CURRENTS WITH LARGE DIFFERENTIAL VOLTAGES
(V_{IN+} at 12V, Sweep of V_{IN-})

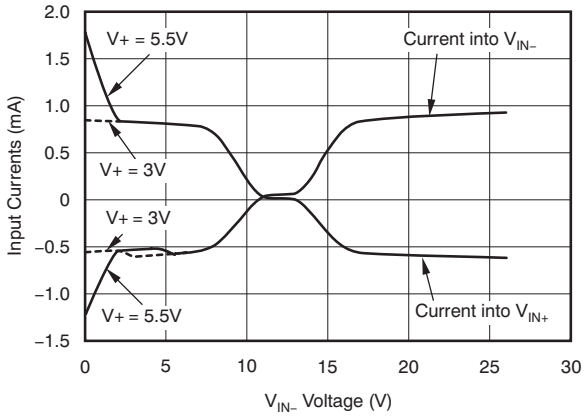

Figure 9.

ACTIVE I_Q vs TEMPERATURE

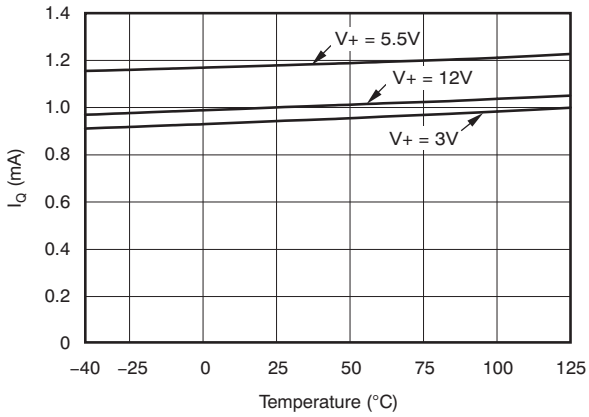

Figure 10.

SHUTDOWN I_Q vs TEMPERATURE

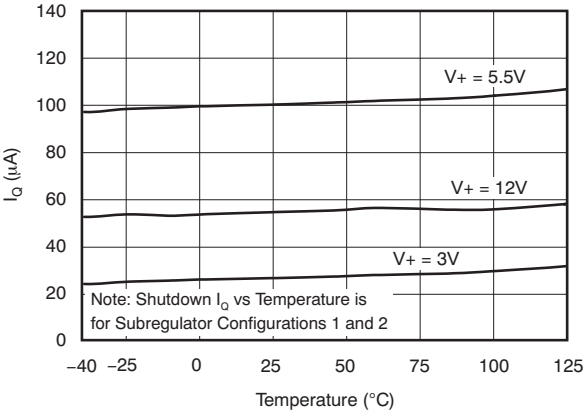

Figure 11.

SHUTDOWN I_Q vs SUPPLY VOLTAGE

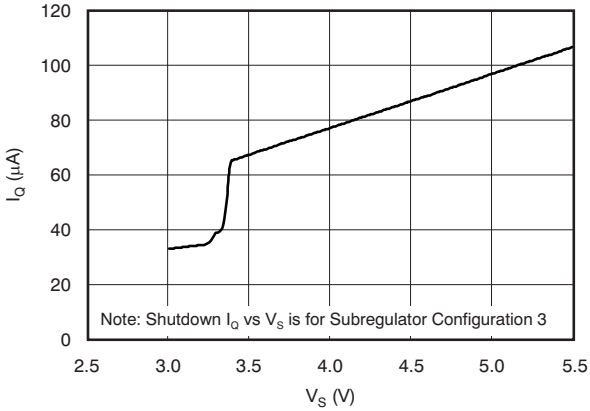

Figure 12.

Copyright © 2010–2011, Texas Instruments Incorporated

TYPICAL CHARACTERISTICS: V+ = +12V (continued)

At T_A = +25°C, V+ = 12V, V_{SENSE} = (V_{IN+} – V_{IN-}) = 32mV, PGA = ÷ 1, and BRNG = 1, unless otherwise noted.

ACTIVE I_Q vs TWO-WIRE CLOCK FREQUENCY

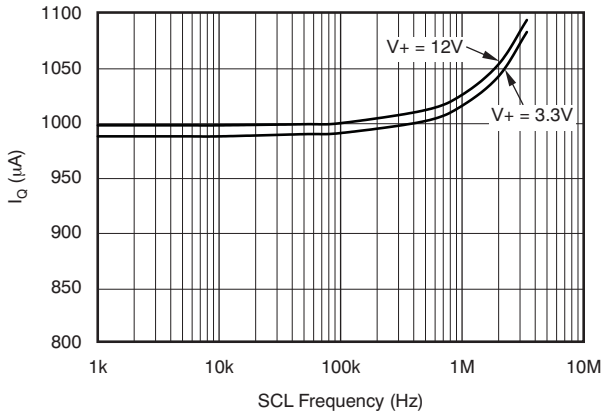

Figure 13.

SHUTDOWN I_Q vs TWO-WIRE CLOCK FREQUENCY

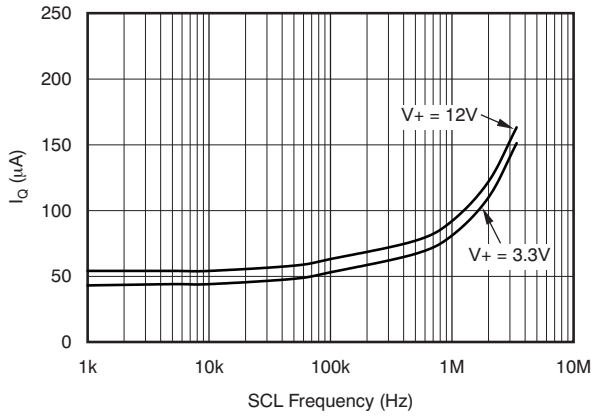

Figure 14.

Copyright © 2010–2011, Texas Instruments Incorporated

TYPICAL CHARACTERISTICS: V+ = +12V (continued)

At T_A = +25°C, V+ = 12V, V_{SENSE} = (V_{IN+} – V_{IN-}) = 32mV, PGA = ÷ 1, and BRNG = 1, unless otherwise noted.

REMOTE TEMPERATURE ERROR vs SERIES RESISTANCE (Diode-Connected Transistor, 2N3906 PNP)

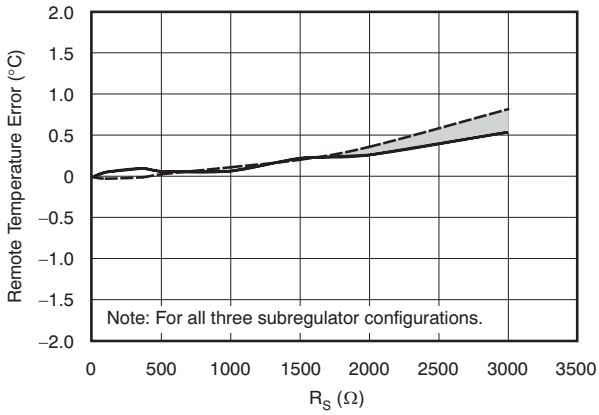

Figure 15.

REMOTE TEMPERATURE ERROR vs SERIES RESISTANCE (GND Collector-Connected Transistor, 2N3906 PNP)

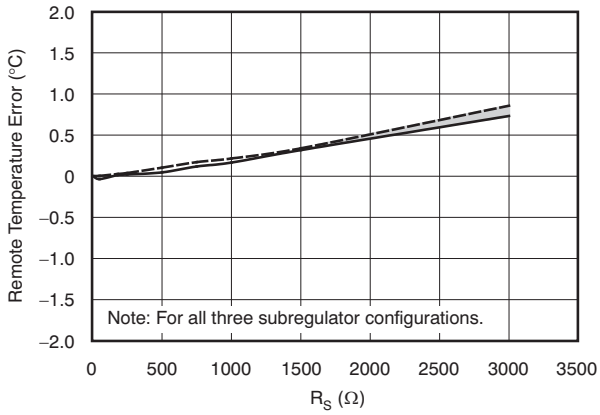

Figure 16.

REMOTE TEMPERATURE ERROR vs DIFFERENTIAL CAPACITANCE

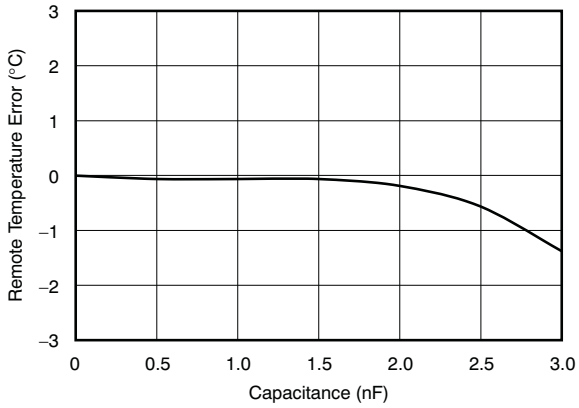

Figure 17.

PARAMETRIC MEASUREMENT INFORMATION

TYPICAL CONNECTIONS

Figure 18. SERIES RESISTANCE CONFIGURATION

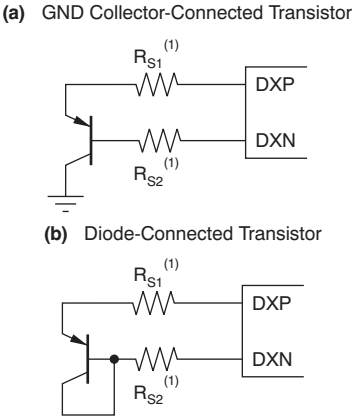

(1) $R_{S1} + R_{S2}$ should be less than 1kΩ; see *Filtering* section.

Figure 19.

Figure 20. DIFFERENTIAL CAPACITANCE CONFIGURATION

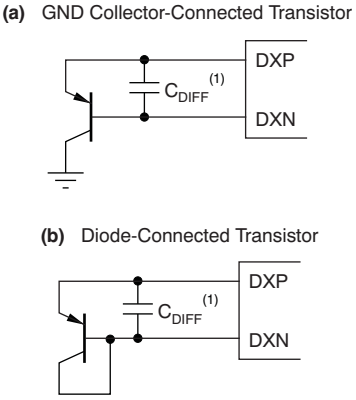

(1) C_{DIFF} should be less than 2200pF; see *Filtering* section.

Figure 21.

Copyright © 2010–2011, Texas Instruments Incorporated

APPLICATION INFORMATION

DESCRIPTION

The TMP512/13 are digital temperature sensors with a digital current-shunt monitor that combine a local die temperature measurement channel and remote junction temperature measurement channels: two for the TMP512 and three for the TMP513. The TMP512/13 contain multiple registers for holding configuration information, temperature, and voltage measurement results. These devices provide digital current, voltage, and power readings necessary for accurate decision-making in precisely-controlled systems. Programmable registers allow flexible configuration for setting warning limits, measurement resolution, and continuous-versus-triggered operation. Detailed register information appears at the end of this data sheet, beginning with Table 3.

For proper remote temperature sensing operation, the TMP512 requires transistors connected between DXP1 and DXN1 and between DXP2 and DXN2, and for the TMP513, between DXP3 and DXN3 as well. Unused channels on the TMP512/13 must be connected to GND.

The TMP512/13 offer compatibility with two-wire and SMBus interfaces. The two-wire and SMBus protocols are essentially compatible with each other. Two-wire is used throughout this data sheet, with SMBus being specified only when a difference between the two systems is being addressed. Two bi-directional lines, SCL and SDA, connect the TMP512/13 to the bus. SDA is an open-drain connection. See Figure 23 for a typical application circuit.

SUBREGULATOR

The subregulator can be configured to three different modes of operation. Each mode has its advantage and limitation. Figure 22 shows the three configuration arrangements. The minimum capacitance on the Filter C pin for Configurations 1 and 2 is 470nF. The minimum capacitance on the Filter C pin for Configuration 3 is 100nF.

Configuration 1 has V+ and V_{IN+} tied together. V+ supplies the subregulator, which in turn supplies the 3.3V to the Filter C pin and the internal die. With the V+ supply range of 4.5V to 26V connected to the shunt voltage, the bus voltage range cannot go to zero and is limited to 4.5V to 26V.

Configuration 2 has V+ to the subregulator without any other connections. Under this configuration, the bus voltage range can go from 0V to 26V, because it is not limited to 4.5V as in Configuration 1.

Configuration 3 has the subregulator V+ and Filter C pins shorted together. V+ is limited to 3V to 5.5V because the Filter C pin supplies the internal die; it cannot exceed this voltage range. The bus voltage range can go from 0V to 26V, because it is not limited to 4.5V as in Configuration 1.

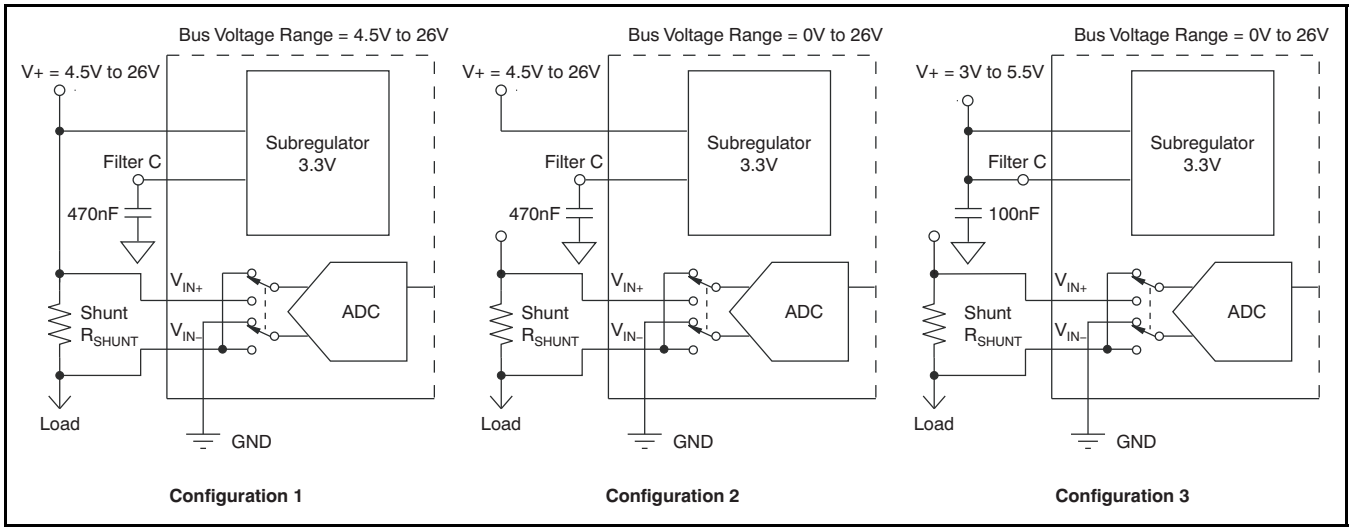

Figure 22. Typical Subregulator Configurations

Copyright © 2010–2011, Texas Instruments Incorporated

SERIES RESISTANCE CANCELLATION

Series resistance in an application circuit that typically results from printed circuit board (PCB) trace resistance and remote line length is automatically cancelled by the TMP512/13, preventing what would otherwise result in a temperature offset. A total of up to 3kΩ of series line resistance is cancelled by the TMP512/13, eliminating the need for additional characterization and temperature offset correction. See the *Remote Temperature Error vs Series Resistance* typical characteristic curves (Figure 15) for details on the effects of series resistance and power-supply voltage on sensed remote temperature error.

DIFFERENTIAL INPUT CAPACITANCE

The TMP512/13 can tolerate differential input capacitance of up to 2200pF with minimal change in temperature error. The effect of capacitance on sensed remote temperature error is illustrated in Figure 16, *Remote Temperature Error vs Differential Capacitance*. See the *Filtering* section for suggested component values where filtering unwanted coupled signals is needed.

TEMPERATURE MEASUREMENT DATA

Temperature measurement data may be taken over an operating range of –40°C to +125°C for both local and remote locations.

The Temperature Register of the TMP512/13 is configured as a 13-bit, read-only register that stores the output of the most recent conversion. Two bytes must be read to obtain data, and are described in the Local Temperature Result Register and the Remote Temperature Result Registers. Note that byte 1 is the most significant byte, followed by byte 2, the least significant byte. The first 13 bits are used to indicate temperature. The least significant byte does not have to be read if that information is not needed. The data format for temperature is summarized in Table 10. One LSB equals 0.0625°C. Negative numbers are represented in binary twos complement format. Following power-up or reset, the Temperature Register will read 0°C until the first conversion is complete. Unused bits in the Temperature Register always read '0'.

REGISTER INFORMATION

The TMP512/13 contain multiple registers for holding configuration information, temperature and voltage measurement results, and status information. These registers are described in Table 3.

POINTER REGISTER

The 8-bit Pointer Register is used to address a given data register. The Pointer Register identifies which of the data registers should respond to a read or write command on the two-wire bus. This register is set with every write command. A write command must be issued to set the proper value in the Pointer Register before executing a read command. Table 3 describes the pointer address of the TMP512/13 registers. The power-on reset (POR) value of the Pointer Register is 00h (0000 0000b).

Copyright © 2010–2011, Texas Instruments Incorporated

n-FACTOR CORRECTION REGISTER

The TMP512/13 allow for a different n-factor value to be used for converting remote channel measurements to temperature. The remote channel uses sequential current excitation to extract a differential V_{BE} voltage measurement to determine the temperature of the remote transistor. Equation 1 describes this voltage and temperature.

$$V_{BE2} - V_{BE1} = \frac{nkT}{q} \ln\left(\frac{I_2}{I_1}\right) \quad (1)$$

The value *n* in Equation 1 is a characteristic of the particular transistor used for the remote channel. The power-on reset value for the TMP512/13 is n = 1.008. The value in the n-Factor Correction Register may be used to adjust the effective n-factor according to Equation 2 and Equation 3.

$$n_{eff} = \frac{1.008 \times 300}{(300 - N_{ADJUST})} \quad (2)$$

$$N_{ADJUST} = 300 - \left(\frac{300 \times 1.008}{n_{eff}}\right) \quad (3)$$

The n-factor value must be stored in twos-complement format, yielding an effective data range from –128 to +127. The n-factor value may be written to and read from pointer address 16h for remote channel 1, pointer address 17h for remote channel 2, and pointer address 18h for remote channel 3. The register power-on reset value is 00h, thus having no effect unless the register is written to.

BUS OVERVIEW

The device that initiates the transfer is called a *master*, and the devices controlled by the master are *slaves*. The bus must be controlled by a master device that generates the serial clock (SCL), controls the bus access, and generates START and STOP conditions.

To address a specific device, the master initiates a START condition by pulling the data signal line (SDA) from a HIGH to a LOW logic level while SCL is HIGH. All slaves on the bus shift in the slave address byte on the rising edge of SCL, with the last bit indicating whether a read or write operation is intended. During the ninth clock pulse, the slave being addressed responds to the master by generating an Acknowledge and pulling SDA LOW.

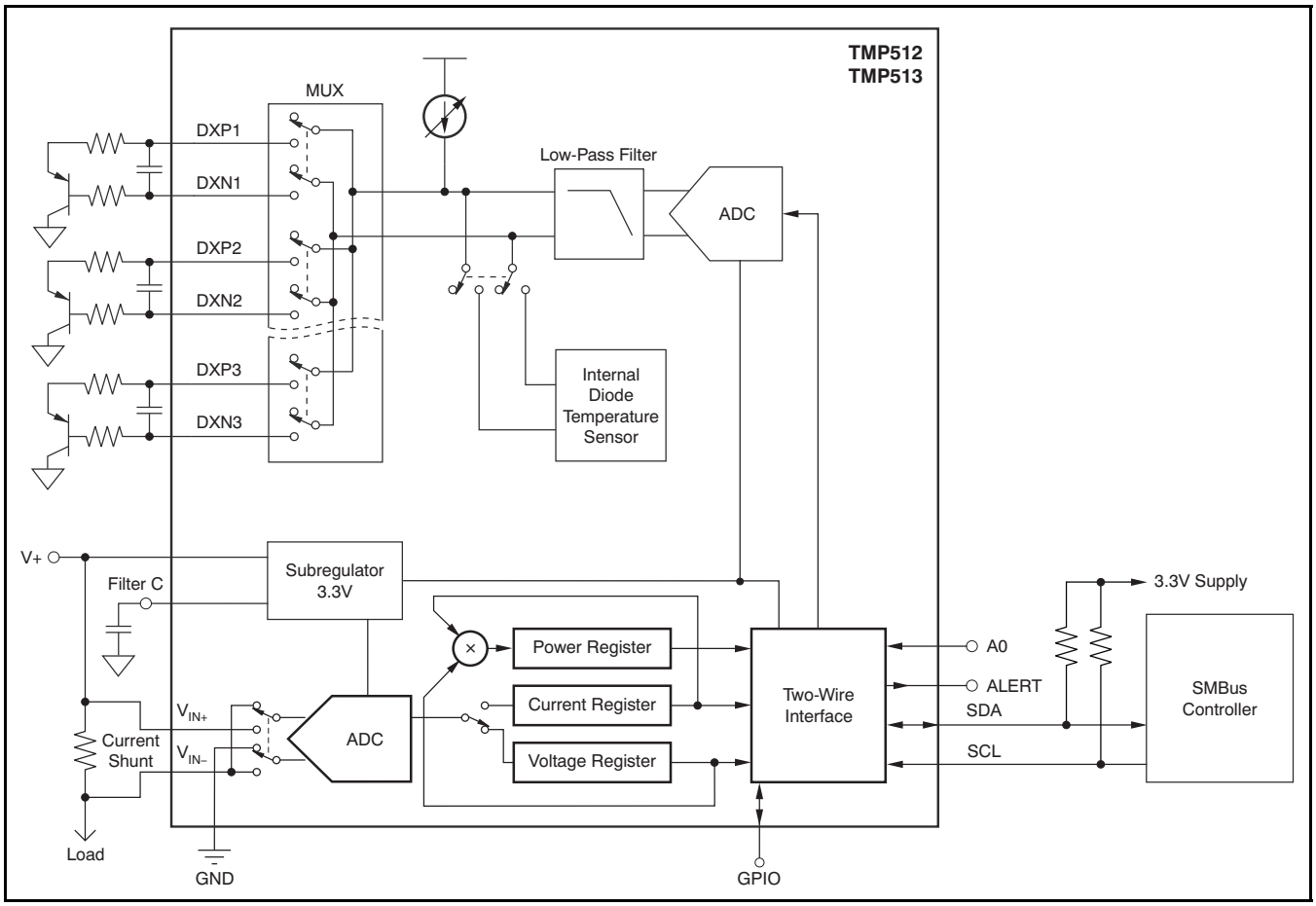

Figure 23. Typical Application Circuit

Copyright © 2010–2011, Texas Instruments Incorporated

Data transfer is then initiated and eight bits of data are sent, followed by an *Acknowledge* bit. During data transfer, SDA must remain stable while SCL is HIGH. Any change in SDA while SCL is HIGH is interpreted as a START or STOP condition.

Once all data have been transferred, the master generates a STOP condition, indicated by pulling SDA from LOW to HIGH while SCL is HIGH. The TMP512/13 includes a 28ms timeout on its interface to prevent locking up an SMBus.

SERIAL BUS ADDRESS

To communicate with the TMP512/13, the master must first address slave devices via a slave address byte. The slave address byte consists of seven address bits, and a direction bit indicating the intent of executing a read or write operation.

The TMP512/13 feature an address pin to allow up to four devices to be addressed on a single bus. Table 1 describes the pin logic levels used to properly connect up to four devices. The state of the A0 pin is sampled on every bus communication and should be set before any activity on the interface occurs. The address pin is read at the start of each communication event.

Table 1. TMP512/13 Address Pins and Slave Addresses

DEVICE TWO-WIRE ADDRESS	A0 PIN CONNECTION
1011100	Ground
1011101	V+
1011110	SDA
1011111	SCL

SERIAL INTERFACE

The TMP512/13 operate only as slave devices on the two-wire bus and SMBus. SCL is an input only, and TMP512/13 cannot drive it. Connections to the bus are made via the open-drain I/O lines SDA and SCL. The SDA and SCL pins feature integrated spike suppression filters and Schmitt triggers to minimize the effects of input spikes and bus noise. The TMP512/13 support the transmission protocol for fast (1kHz to 400kHz) and high-speed (1kHz to 3.4MHz) modes. All data bytes are transmitted MSB first.

WRITING TO/READING FROM THE TMP512/13

Accessing a particular register on the TMP512/13 is accomplished by writing the appropriate value to the register pointer. Refer to Table 3 for a complete list of registers and corresponding addresses. The value for the register pointer as shown in Figure 26 is the first byte transferred after the slave address byte with the R/$\overline{W}$ bit LOW. Every write operation to the TMP512/13 requires a value for the register pointer.

Writing to a register begins with the first byte transmitted by the master. This byte is the slave address, with the R/$\overline{W}$ bit LOW. The TMP512/13 then acknowledge receipt of a valid address. The next byte transmitted by the master is the address of the register to which data will be written. This register address value updates the register pointer to the desired register. The next two bytes are written to the register addressed by the register pointer. The TMP512/13 acknowledge receipt of each data byte. The master may terminate data transfer by generating a START or STOP condition.

When reading from the TMP512/13, the last value stored in the register pointer by a write operation determines which register is read during a read operation. To change the register pointer for a read operation, a new value must be written to the register pointer. This write is accomplished by issuing a slave address byte with the R/$\overline{W}$ bit LOW, followed by the register pointer byte. No additional data are required. The master then generates a START condition and sends the slave address byte with the R/$\overline{W}$ bit HIGH to initiate the read command. The next byte is transmitted by the slave and is the most significant byte of the register indicated by the register pointer. This byte is followed by an *Acknowledge* from the master; then the slave transmits the least significant byte. The master acknowledges receipt of the data byte. The master may terminate data transfer by generating a *Not-Acknowledge* after receiving any data byte, or generating a START or STOP condition. If repeated reads from the same register are desired, it is not necessary to continually send the register pointer bytes; the TMP512/13 retain the register pointer value until it is changed by the next write operation.

Figure 24 and Figure 25 show read and write operation timing diagrams, respectively. Note that register bytes are sent most-significant byte first, followed by the least significant byte. See Figure 27 for an illustration of a typical register pointer configuration.

Copyright © 2010–2011, Texas Instruments Incorporated

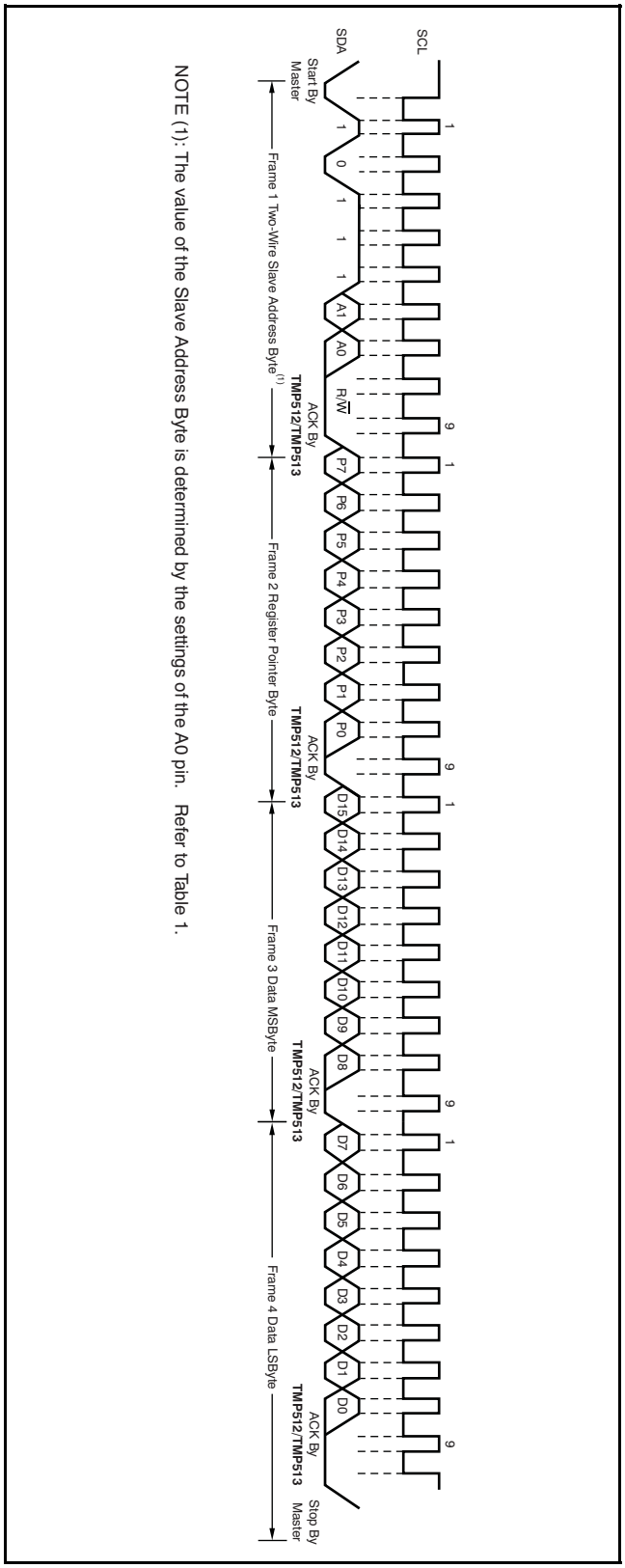

NOTE (1): The value of the Slave Address Byte is determined by the settings of the A0 pin. Refer to Table 1.

Figure 24. Timing Diagram for Write Word Format

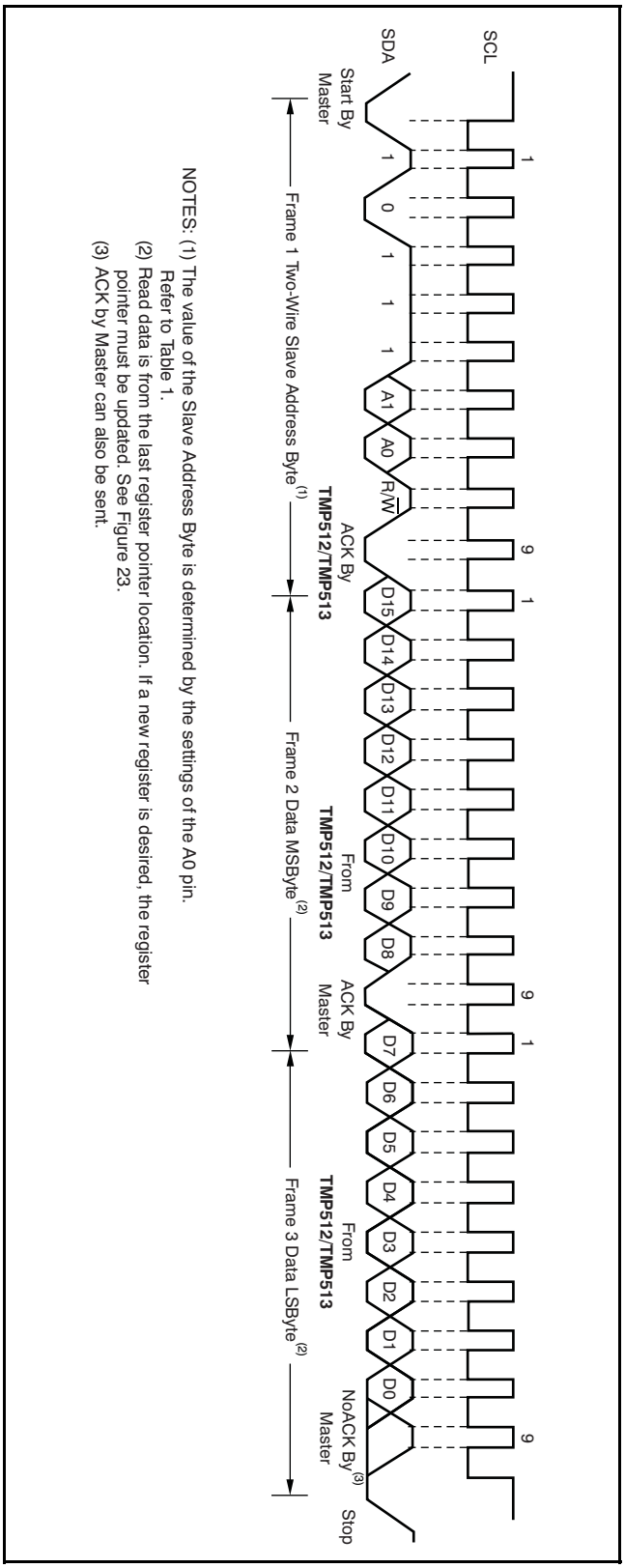

NOTES: (1) The value of the Slave Address Byte is determined by the settings of the A0 pin. Refer to Table 1.
(2) Read data is from the last register pointer location. If a new register is desired, the register pointer must be updated. See Figure 23.
(3) ACK by Master can also be sent.

Figure 25. Timing Diagram for Read Word Format

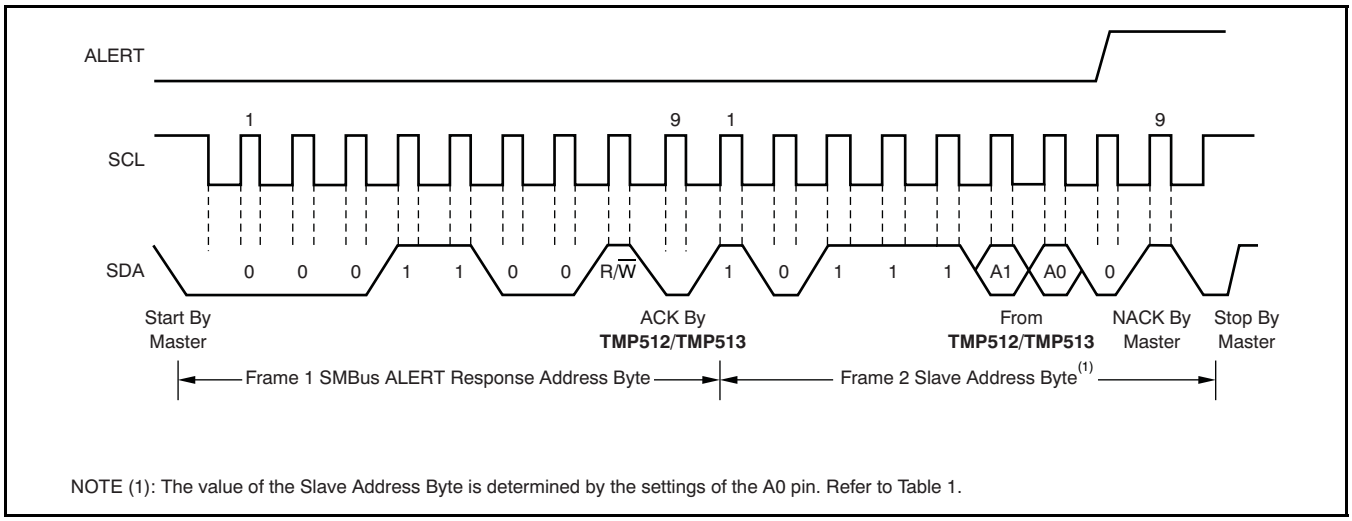

Figure 26. Timing Diagram for SMBus ALERT

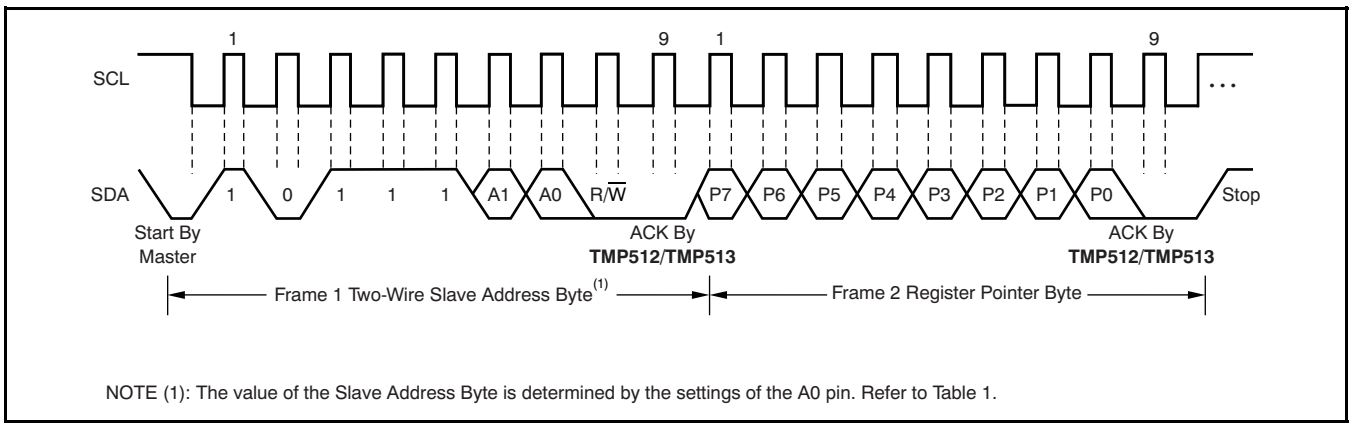

Figure 27. Typical Register Pointer Set

Copyright © 2010–2011, Texas Instruments Incorporated

TIMING DIAGRAMS

Figure 28 describes the timing operations on the TMP512/13. Parameters for Figure 28 are defined in Table 2. Bus definitions are:

Bus Idle: Both SDA and SCL lines remain high.

Start Data Transfer: A change in the state of the SDA line, from high to low, while the SCL line is high, defines a START condition. Each data transfer initiates with a START condition. Denoted as *S* in Figure 28.

Stop Data Transfer: A change in the state of the SDA line from low to high while the SCL line is high defines a STOP condition. Each data transfer terminates with a repeated START or STOP condition. Denoted as *P* in Figure 28.

Data Transfer: The number of data bytes transferred between a START and a STOP condition is not limited and is determined by the master device. The receiver acknowledges data transfer.

Acknowledge: Each receiving device, when addressed, is obliged to generate an Acknowledge bit. A device that acknowledges must pull down the SDA line during the Acknowledge clock pulse in such a way that the SDA line is stable low during the high period of the Acknowledge clock pulse. Setup and hold times must be taken into account. On a master receive, data transfer termination can be signaled by the master generating a Not-Acknowledge on the last byte that has been transmitted by the slave.

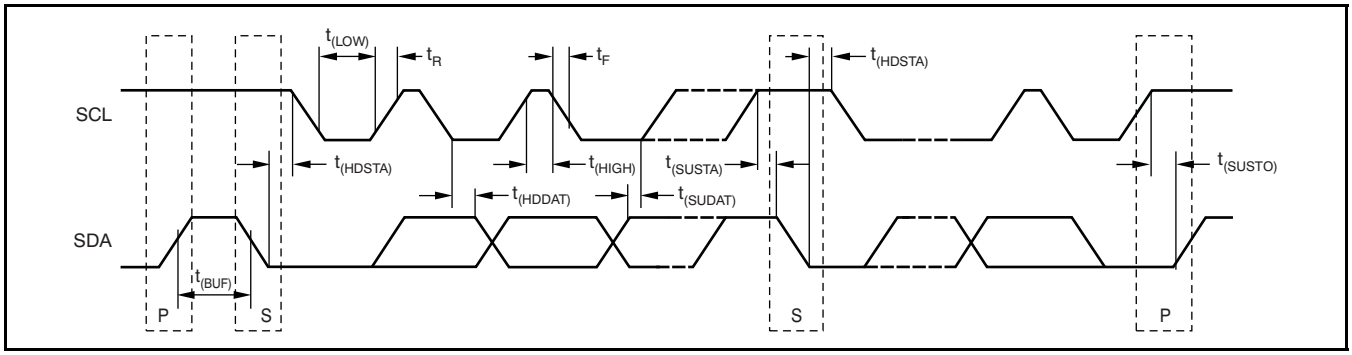

Figure 28. Two-Wire Timing Diagram

Table 2. Timing Characteristics for Figure 28

PARAMETER		FAST MODE		HIGH-SPEED MODE		UNIT
		MIN	MAX	MIN	MAX	
SCL Operating Frequency	$f_{(SCL)}$	0.001	0.4	0.001	3.4	MHz
Bus Free Time Between STOP and START Condition	$t_{(BUF)}$	600		160		ns
Hold time after repeated START condition. After this period, the first clock is generated.	$t_{(HDSTA)}$	100		100		ns
Repeated START Condition Setup Time	$t_{(SUSTA)}$	100		100		ns
STOP Condition Setup Time	$t_{(SUSTO)}$	100		100		ns
Data Hold Time	$t_{(HDDAT)}$	0 (1)		0 (2)		ns
Data Setup Time	$t_{(SUDAT)}$	100		10		ns
SCL Clock LOW Period	$t_{(LOW)}$	1300		160		ns
SCL Clock HIGH Period	$t_{(HIGH)}$	600		60		ns
Clock/Data Fall Time	t_F		300		160	ns
Clock/Data Rise Time	t_R		300		160	ns
for SCL ≤ 100kHz	t_R		1000			

(1) For cases with fall time of SCL less than 20ns and/or the rise or fall time of SDA less than 20ns, the hold time should be greater than 20ns.
(2) For cases with a fall time of SCL less than 10ns and/or the rise or fall time of SDA less than 10ns, the hold time should be greater than 10ns.

Copyright © 2010–2011, Texas Instruments Incorporated

HIGH-SPEED MODE

In order for the two-wire bus to operate at frequencies above 400kHz, the master device must issue a High-Speed mode (Hs-mode) master code (0000 1xxx) as the first byte after a START condition to switch the bus to high-speed operation. The TMP512/13 do not acknowledge this byte, but switch the input filters on SDA and SCL and the output filter on SDA to operate in Hs-mode, allowing transfers at up to 3.4MHz. After the Hs-mode master code has been issued, the master transmits a START condition to a two-wire slave address that initiates a data transfer operation. The bus continues to operate in Hs-mode until a STOP condition occurs on the bus. Upon receiving the STOP condition, the TMP512/13 switch the input and output filters back to Fast mode operation.

POWER-UP CONDITIONS

Power-up conditions apply to a software reset via the RST bit (bit 15) in the Configuration Register, or the two-wire bus General Call Reset. At device power up, all Status bits are masked, and the SMBus Alert function is disabled. All watchdog outputs default to active low and transparent (non-latched) modes.

SHUTDOWN MODE

The TMP512/13 shutdown mode of operation allows the user flexibility to shut down the shunt/bus voltage measurement and the temperature measurement functions individually.

To shut down the shunt/bus voltage measurement function immediately, set bits 2 through 0 in Configuration Register 1 (00h) to '000' respectively. To shut down the shunt/bus voltage measurement after the end of the current conversion, set bits 2 through 0 in Configuration Resister 1 (00h) to '100' respectively.

To shut down the temperature measurement function immediately, set bits 15 through 11 in Configuration Register 2 (01h) to '00000' respectively. To shut down the temperature measurement after the end of the current conversion, set bit 15 in Configuration Register 2 (01h) to '0'.

ONE-SHOT COMMAND

For the TMP512/13, when the temperature core is in shutdown and the voltage core is in triggered mode, a single conversion is started on all enabled channels by writing a '1' to the OS bit in Configuration Register 1. This write operation starts one conversion; the TMP512/13 returns to shutdown mode when that conversion completes. At the end of the conversion, the Conversion Ready flags (bit 6 and bit 5) in the Status Register are set to indicate end of conversion.

SENSOR FAULT

The TMP512/13 can sense an open circuit. Short-circuit conditions return a value of –256°C. The detection circuitry consists of a voltage comparator that trips when the voltage at DXP exceeds (V+) – 0.6V (typical). The comparator output is continuously checked during a conversion. If a fault is detected, the OPEN bit (bit 0) in the temperature result register is set to '1' and the rest of the register bits should be ignored.

When not using the remote sensor with the TMP512/13, the DXP and DXN inputs must be connected together to prevent meaningless fault warnings.

UNDERVOLTAGE LOCKOUT

The TMP512/13 sense when the power-supply voltage has reached a minimum voltage level for the ADC to function. The detection circuitry consists of a voltage comparator that enables the ADC after the power supply (V+) exceeds 2.7V (typical). The comparator output is continuously checked during a conversion. The TMP512/13 do not perform a temperature conversion if the power supply is not valid. The PVLD bit (see Status Register; Local Temperature Reset Register; Remote Temperature Reset 1, 2 and 3 Registers) of the individual Local/Remote Temperature Result Registers are set to '1' and the temperature result may be incorrect.

TEMPERATURE AVERAGING

The TMP512/13 average the input diode voltages that determine the remote temperature by sampling multiple times throughout a conversion. The temperature result can be extracted from four different V_{BE} readings and is sampled 600 times in 130ms (max). Each V_{BE} voltage is sampled 150 times through integration capacitors that average the results throughout the conversion time. A delta-sigma (ΔΣ) modulator and digital filter integrate the V_{BE} voltages and create a sync filter averaging system. In addition, a low-pass filter is present at the input of the converter with a cutoff frequency of 65kHz. This integrating topology offers superior noise immunity.

FILTERING

Remote junction temperature sensors are usually implemented in a noisy environment. Noise is frequently generated by fast digital signals and if not filtered properly will induce errors that can corrupt temperature measurements. The TMP512/13 have a built-in 65kHz filter on the inputs of DXP and DXN to minimize the effects of noise. However, a bypass capacitor placed differentially across the inputs of the remote temperature sensor is recommended to make the application more robust against unwanted coupled signals. The value of this capacitor should be

Copyright © 2010–2011, Texas Instruments Incorporated

between 100pF and 1nF. Some applications attain better overall accuracy with additional series resistance; however, this increased accuracy is application-specific. When series resistance is added, the total value should not be greater than 3kΩ. If filtering is needed, suggested component values are 100pF and 50Ω on each input; exact values are application-specific.

GENERAL CALL RESET

The TMP512/13 support reset via the two-wire General Call address 00h (0000 0000b). The TMP512/13 acknowledge the General Call address and respond to the second byte. If the second byte is 06h (0000 0110b), the TMP512/13 execute a software reset state to all TMP512/13 registers, and abort any conversion in progress. The TMP512/13 take no action in response to other values in the second byte.

REMOTE SENSING

The TMP512/13 are designed to be used with either discrete transistors or substrate transistors built into processor chips and ASICs. Either NPN or PNP transistors can be used, as long as the base-emitter junction is used as the remote temperature sense. NPN transistors must be diode-connected. PNP transistors can either be transistor- or diode-connected, as Figure 19 and Figure 21 show.

Errors in remote temperature sensor readings are typically the consequence of the ideality factor and current excitation used by the TMP512/13 versus the manufacturer-specified operating current for a given transistor. Some manufacturers specify a high-level and low-level current for the temperature-sensing substrate transistors. The TMP512/13 use 6μA for I_{LOW} and 120μA for I_{HIGH}.

The ideality factor (n) is a measured characteristic of a remote temperature sensor diode as compared to an ideal diode. The TMP512/13 allow for different n-factor values; see the *n-Factor Correction Register* section.

The ideality factor for the TMP512/13 is trimmed to be 1.008. For transistors that have an ideality factor that does not match the TMP512/13, Equation 4 can be used to calculate the temperature error. Note that for the equation to be used correctly, actual temperature (°C) must be converted to kelvins (K).

$$T_{ERR} = \left(\frac{n - 1.008}{1.008}\right) \times \left[273.15 + T(°C)\right] \quad (4)$$

Where:

n = ideality factor of remote temperature sensor.

T(°C) = actual temperature.

T_{ERR} = error in TMP512/13 because n ≠ 1.008.

Degree delta is the same for °C and K.

For n = 1.004 and T(°C) = 100°C:

$$T_{ERR} = \left(\frac{1.004 - 1.008}{1.008}\right) \times \left(273.15 + 100°C\right)$$

$$T_{ERR} = 1.48°C \quad (5)$$

If a discrete transistor is used as the remote temperature sensor with the TMP512/13, the best accuracy can be achieved by selecting the transistor according to the following criteria:

1. Base-emitter voltage > 0.25V at 6μA, at the highest sensed temperature.
2. Base-emitter voltage < 0.95V at 120μA, at the lowest sensed temperature.
3. Base resistance < 100Ω.
4. Tight control of V_{BE} characteristics indicated by small variations in h_{FE} (that is, 50 to 150).

Based on these criteria, two recommended small-signal transistors are the 2N3904 (NPN) or 2N3906 (PNP).

BASIC ADC FUNCTIONS

The two analog inputs to the TMP512/13, V_{IN+} and V_{IN-}, connect to a shunt resistor in the bus of interest. The TMP512/13 are powered by an internal subregulator, which has a typical output of 3.3V. The bus being sensed can vary from 0V to 26V. There are no special considerations for power-supply sequencing (for example, a bus voltage can be present with the supply voltage off, and vice-versa). The TMP512/13 sense the small drop across the shunt for shunt voltage, and sense the voltage with respect to ground from V_{IN-} for the bus voltage. See Figure 29 for an illustration of this operation.

When the TMP512/13 are in the normal operating mode (that is, MODE bits of Configuration Register 1 are set to '111'), the devices continuously convert the shunt voltage up to the number set in the shunt voltage averaging function (Configuration Register 1, SADC bits). The devices then convert the bus voltage up to the number set in the bus voltage averaging (Configuration Register 1, BADC bits). The Mode control in Configuration Register 1 also permits selecting modes to convert only voltage or current, either continuously or in response to a two-wire command.

Copyright © 2010–2011, Texas Instruments Incorporated

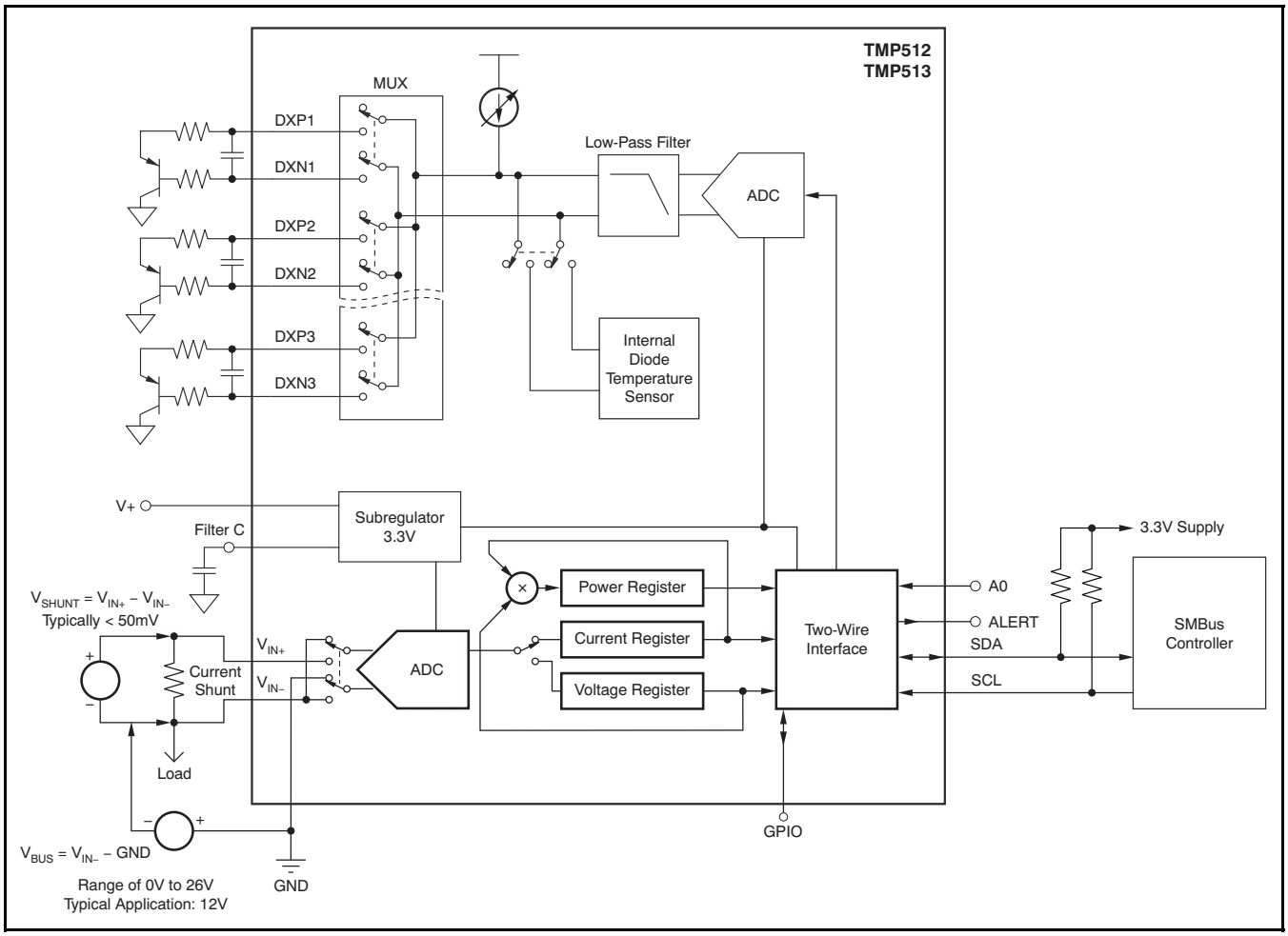

Figure 29. TMP512/13 Configured for Shunt and Bus Voltage Measurement

All current and power calculations are performed in the background and do not contribute to conversion time; conversion times shown in the Electrical Characteristics table can be used to determine the actual conversion time.

Power-Down mode reduces the quiescent current and turns off current into the TMP512/13 inputs, avoiding any supply drain. Full recovery from Power-Down requires 40µs. ADC Off mode (set by Configuration Register 1, MODE bits) stops all conversions.

Although the TMP512/13 can be read at any time, and the data from the last conversion remain available, the Conversion Ready bit and the Conversion Ready Temperature bit (Status Register, CVR and CRT) are provided to help co-ordinate one-shot or triggered conversions. The Conversion Ready bit and the Conversion Ready Temperature bit are set after all conversions, averaging, and multiplication operations are complete.

The Conversion Ready bit and the Conversion Ready Temperature bit clear when reading the Status Register or triggering a single-shot conversion.

POWER MEASUREMENT

Current and bus voltage are converted at different points in time, depending on the resolution and averaging mode settings. For instance, when configured for 12-bit and 128 sample averaging, up to 81ms in time between sampling these two values is possible. Again, these calculations are performed in the background and do not add to the overall conversion time.

PGA FUNCTION

If larger full-scale shunt voltages are desired, the TMP512/13 provide a PGA function that increases the full-scale range up to 2, 4, or 8 times (320mV). Additionally, the bus voltage measurement has two full-scale ranges: 16V or 32V.

Copyright © 2010–2011, Texas Instruments Incorporated

COMPATIBILITY WITH TI HOT-SWAP CONTROLLERS

The TMP512/13 are designed for compatibility with hot-swap controllers such the TI TPS2490. The TPS2490 uses a high-side shunt with a limit at 50mV; the TMP512/13 full-scale range of 40mV enables the use of the same shunt for current sensing below this limit. When sensing is required at (or through) the 50mV sense point of the TPS2490, the PGA of the TMP512/13 can be set to ÷2 to provide an 80mV full-scale range.

FILTERING AND INPUT CONSIDERATIONS

Measuring current is often noisy, and such noise can be difficult to define. The TMP512/13 offer several options for filtering by choosing resolution and averaging in Configuration Register 1. These filtering options can be set independently for either voltage or current measurement.

The internal ADC is based on a delta-sigma (ΔΣ) front-end with a 500kHz (±10%) typical sampling rate. This architecture has good inherent noise rejection; however, transients that occur at or very close to the sampling rate harmonics can cause problems. Because these signals are at 1MHz and higher, they can be dealt with by incorporating filtering at the input of the TMP512/13. The high frequency enables the use of low-value series resistors on the filter for negligible effects on measurement accuracy. Figure 30 shows the TMP512/13 with an additional filter added at the input.

Overload conditions are another consideration for the TMP512/13 inputs. The TMP512/13 inputs are specified to tolerate 26V across the inputs. A large differential scenario might be a short to ground on the load side of the shunt. This type of event can result in full power-supply voltage across the shunt (as long the power supply or energy storage capacitors support it). It must be remembered that removing a short to ground can result in inductive kickbacks that could exceed the 26V differential and common-mode rating of the TMP512/13. Inductive kickback voltages are best dealt with by zener-type transient-absorbing devices (commonly called *transzorbs*) combined with sufficient energy storage capacitance.

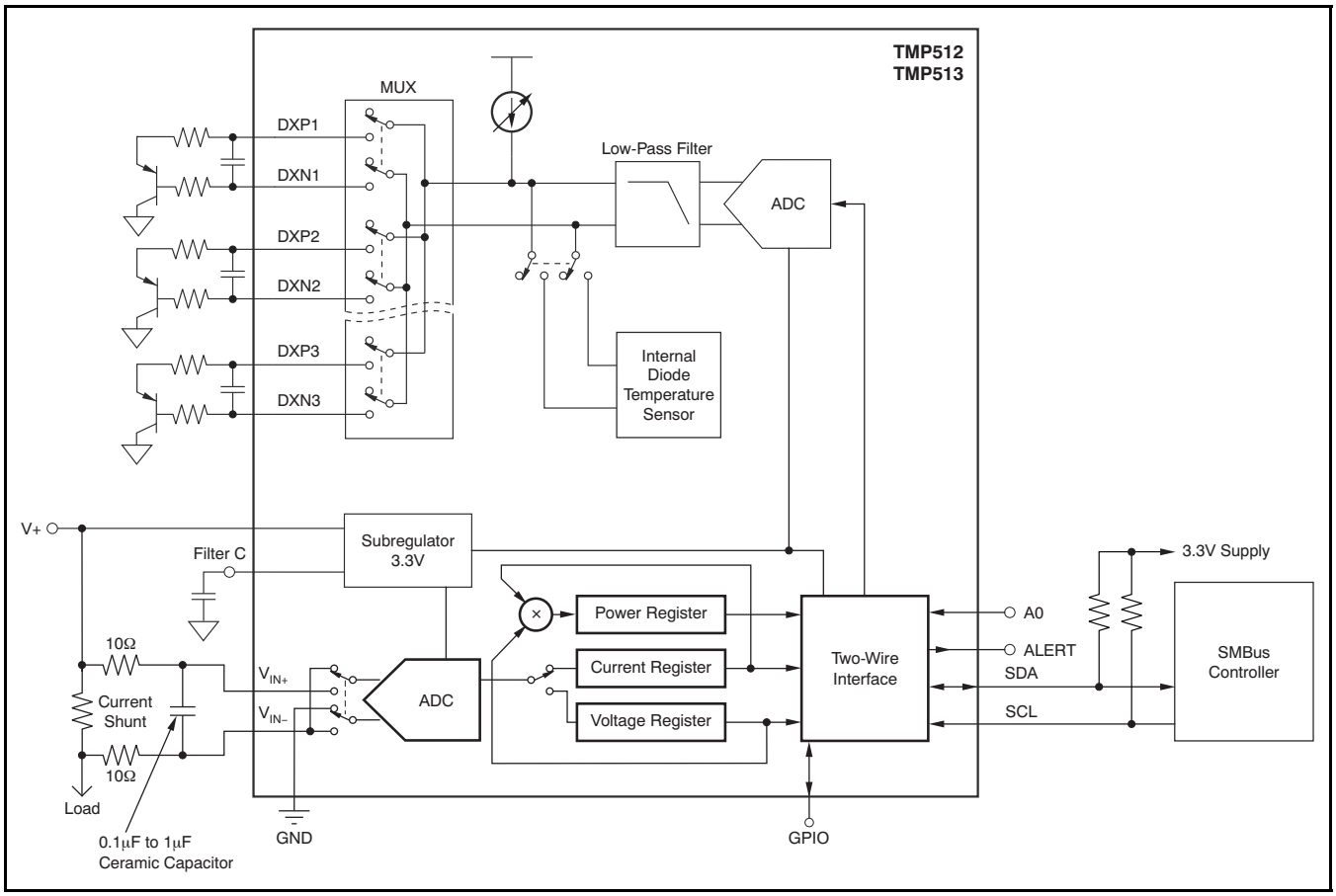

Figure 30. TMP512/13 with Input Filtering

In applications that do not have large energy storage electrolytics on one or both sides of the shunt, an input overstress condition may result from an excessive dV/dt of the voltage applied to the input. A hard physical short is the most likely cause of this event, particularly in applications with no large electrolytics present. This problem occurs because an excessive dV/dt can activate the ESD protection in the TMP512/13 in systems where large currents are available. Testing has demonstrated that the addition of 10Ω resistors in series with each input of the TMP512/13 sufficiently protects the inputs against dV/dt failure up to the 26V rating of the TMP512/13. These resistors have no significant effect on accuracy.

SMBus ALERT RESPONSE

The SMBus alert response functions only when the Alert pin is active and in latch mode (03h, bit 0 = 1); see Figure 26. The ALERT interrupt output signal is latched and can be cleared only by either reading the Status Register or by successfully responding to an alert response address. If the fault is still present, the ALERT pin re-asserts. Asserting the ALERT pin does not halt automatic conversions that are already in progress. The ALERT output pin is open-drain, allowing multiple devices to share a common interrupt line.

The TMP512/13 respond to the SMBus alert response address, an interrupt pointer return-address feature. The SMBus alert response interrupt pointer provides quick fault identification for simple slave devices. When an ALERT occurs, the master can broadcast the alert response slave address (0001 100). Following this alert response, any slave devices that generated interrupts identify themselves by putting the respective addresses on the bus.

The alert response can activate several different slave devices simultaneously, similar to the two-wire General Call. If more than one slave attempts to respond, bus arbitration rules apply; the device with the lower address code wins. The losing device does not generate an Acknowledge and continues to hold the ALERT line low until the interrupt is cleared. Successful completion of the read alert response protocol clears the SMBus ALERT pin, provided that the condition causing the alert no longer exists. The SMBus Alert flag is cleared separately by either reading the Status Register or by disabling the SMBus Alert function.

The Status Register flags indicate which (if any) of the watchdogs have been activated. After power-on reset (POR), the normal state of all flag bits is '0', assuming that no alarm conditions exist.

EXTERNAL CIRCUITRY FOR ADDITIONAL V_{BUS} INPUT

The TMP512/13 GPIO can be used to control an external circuit to switch the V_{BUS} measurement to an alternate location. Switching is most often done to perform bus voltage measurements on the opposite side of a MOSFET switch in series with the shunt resistor.

Consideration must be given to the typical 20µA input current of each TMP512/13 input, along with the 320kΩ impedance present at the V_{IN-} input where the bus voltage is measured. These effects can create errors through the resistance of any external switching method used. The easiest way to avoid these errors is by reducing this resistance to a minimum; select switching MOSFETs with the lowest possible $R_{DS(on)}$ values.

The circuit shown in Figure 31 uses MOSFET pairs to reduce package count. Back-to-back MOSFETs must be used in each leg because of the built-in back diodes from source-to-drain. In this circuit, the normal connection for V_{IN-} is at the shunt, with the optional voltage measurement at the output of the control FET.

Copyright © 2010–2011, Texas Instruments Incorporated

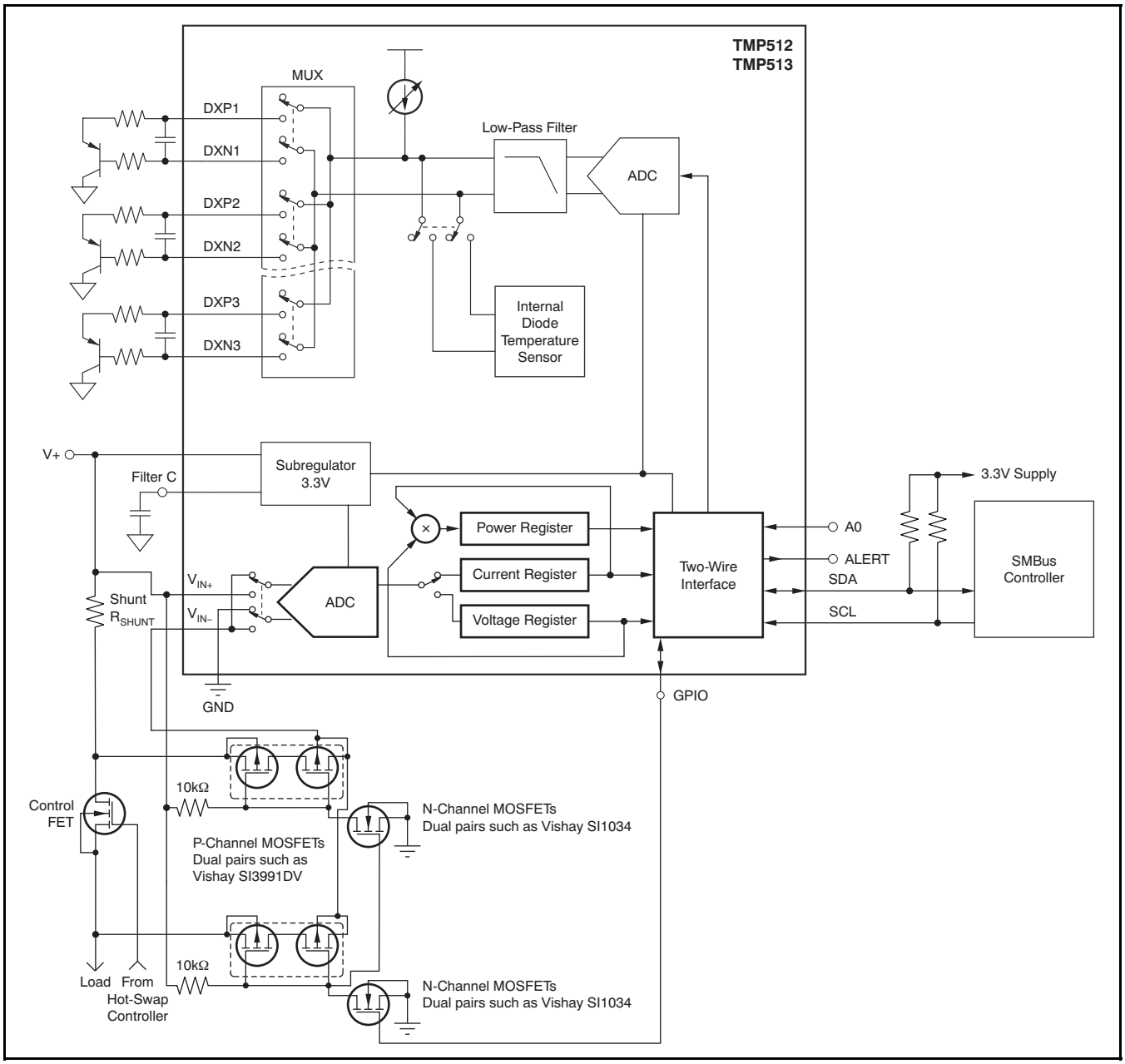

Figure 31. External Circuitry for Additional V_{BUS} Input

PROGRAMMING THE TMP512/13 POWER MEASUREMENT ENGINE

Calibration Register and Scaling

The Calibration Register makes it possible to set the scaling of the Current and Power Registers to whatever values are most useful for a given application. One strategy may be to set the Calibration Register such that the largest possible number is generated in the Current Register or Power Register at the expected full-scale point; this approach yields the highest resolution. The Calibration Register can also be selected to provide values in the Current and Power Registers that either provide direct decimal equivalents of the values being measured, or yield a round LSB number. After these choices have been made, the Calibration Register also offers possibilities for end user system-level calibration, where the value is adjusted slightly to cancel total system error.

This section presents two examples for configuring the TMP512/13 calibration. Both examples are written so the information relates directly to the calibration setup found in the TMP512/13EVM software.

Calibration Example 1: Calibrating the TMP512/13 with no possibility for overflow.

NOTE

The numbers used in this example are the same used with the TMP512/13EVM software as shown in Figure 32.

1. Establish the following parameters:

   $V_{BUS_MAX} = 32$

   $V_{SHUNT_MAX} = 0.32$

   $R_{SHUNT} = 0.5$

2. Use Equation 6 to determine the maximum possible current .

$$\text{MaxPossible_I} = \frac{V_{SHUNT_MAX}}{R_{SHUNT}}$$

$$\text{MaxPossible_I} = 0.64 \tag{6}$$

3. Choose the desired maximum current value. This value is selected based on system expectations.

   Max_Expected_I = 0.6

4. Calculate the possible range of current LSBs. To calculate this range, first compute a range of LSBs that is appropriate for the design. Next, select an LSB within this range. Note that the results will have the most resolution when the minimum LSB is selected. Typically, an LSB is selected to be the nearest round number to the minimum LSB value.

$$\text{Minimum_LSB} = \frac{\text{Max_Expected_I}}{32767}$$

$$\text{Minimum_LSB} = 18.311 \times 10^{-6} \tag{7}$$

$$\text{Maximum_LSB} = \frac{\text{Max_Expected_I}}{4095}$$

$$\text{Maximum_LSB} = 146.520 \times 10^{-6} \tag{8}$$

   Choose an LSB in the range: Minimum_LSB < Selected_LSB < Maximum_LSB

   $\text{Current_LSB} = 20 \times 10^{-6}$

   Note:

   This value was selected to be a round number near the Minimum_LSB. This selection allows for good resolution with a rounded LSB.

5. Compute the Calibration Register value using Equation 9:

$$\text{Cal} = \text{trunc}\left(\frac{0.04096}{\text{Current_LSB} \times R_{SHUNT}}\right)$$

$$\text{Cal} = 4096 \tag{9}$$

Copyright © 2010–2011, Texas Instruments Incorporated

6. Calculate the Power LSB with Equation 10. Equation 10 shows a general formula; because the bus voltage measurement LSB is always 4mV, the power formula reduces to the calculated result.

   Power_LSB = 20 Current_LSB

   $$\text{Power_LSB} = 400 \times 10^{-6} \tag{10}$$

7. Compute the maximum current and shunt voltage values (before overflow), as shown by Equation 11 and Equation 12. Note that both Equation 11 and Equation 12 involve an *If - then* condition:

   Max_Current = Current_LSB × 32767

   $$\text{Max_Current} = 0.65534 \tag{11}$$

   If Max_Current ≥ MaxPossible_I then
   Max_Current_Before_Overflow = MaxPossible_I
   Else
   Max_Current_Before_Overflow = Max_Current
   End If

   (Note that Max_Current is greater than MaxPossible_I in this example.)

   Max_Current_Before_Overflow = 0.64

   Max_ShuntVoltage = Max_Current_Before_Overflow × R_{SHUNT}

   $$\text{Max_ShuntVoltage} = 0.32 \tag{12}$$

   If Max_ShuntVoltage ≥ V_{SHUNT_MAX}
   Max_ShuntVoltage_Before_Overflow = V_{SHUNT_MAX}
   Else
   Max_ShuntVoltage_Before_Overflow= Max_ShuntVoltage
   End If
   (Note that Max_ShuntVoltage is greater than V_{SHUNT_MAX} in this example.)
   Max_ShuntVoltage_Before_Overflow = 0.32

8. Compute the maximum power with Equation 13.

   MaximumPower = Max_Current_Before_Overflow × V_{BUS_MAX}

   $$\text{MaximumPower} = 20.48 \tag{13}$$

9. (Optional second Calibration step.) Compute corrected full-scale calibration value based on measured current.

   TMP513_Current = 0.63484

   MeaShuntCurrent = 0.55

   $$\text{Corrected_Full_Scale_Cal} = \text{trunc}\left(\frac{\text{Cal} \times \text{MeasShuntCurrent}}{\text{TMP513_Current}}\right)$$

   $$\text{Corrected_Full_Scale_Cal} = 3548 \tag{14}$$

Figure 32 illustrates how to perform the same procedure discussed in this example using the automated TMP512/13EVM software. Note that the same numbers used in this nine-step example are used in the software example. Note also that Figure 32 illustrates which results correspond to which step (for example, the information entered in Step 1 is enclosed in a box in Figure 32 and labeled).

Copyright © 2010–2011, Texas Instruments Incorporated

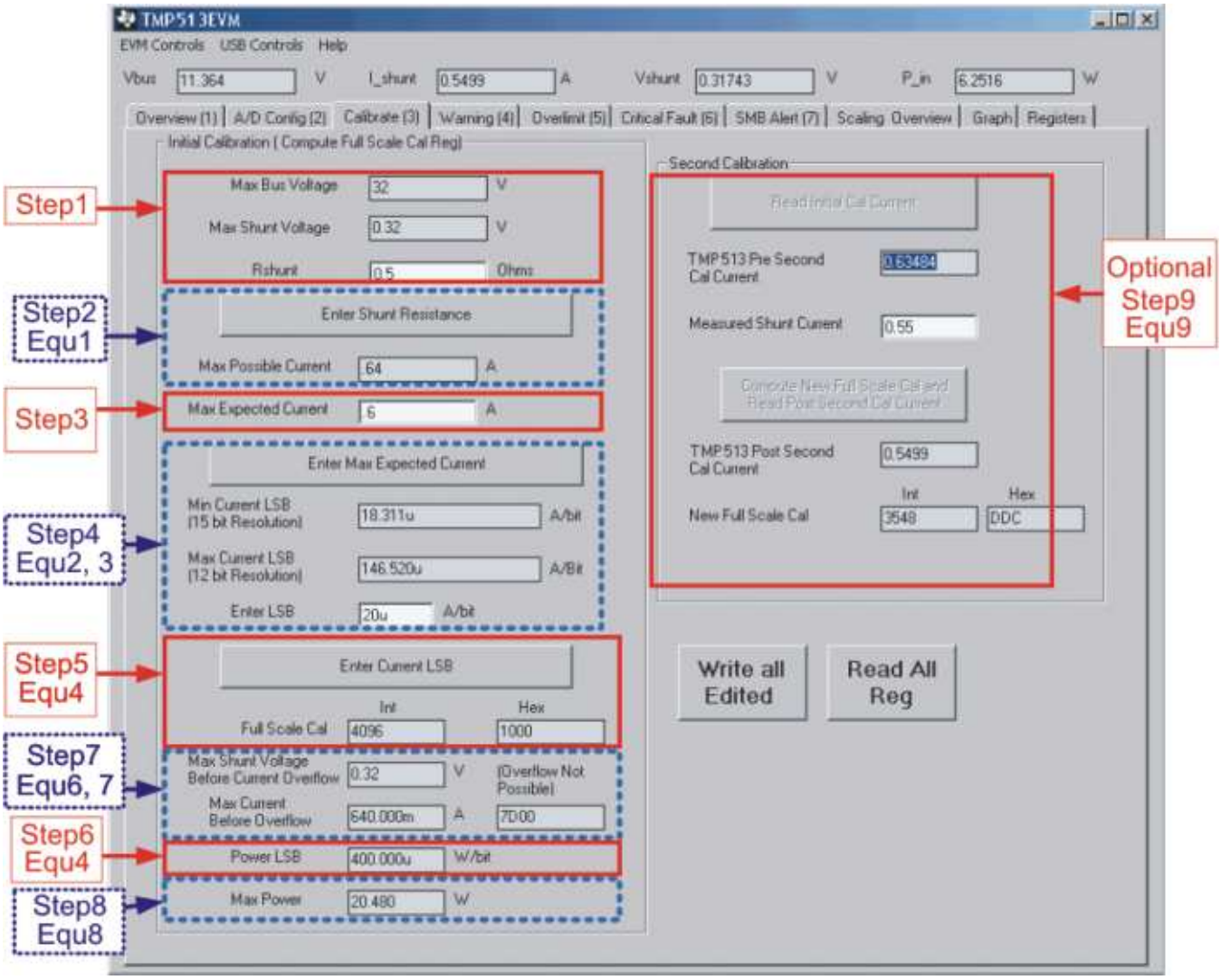

Figure 32. TMP512/513EVM Calibration Software Automatically Computes Calibration Steps 1-9

Copyright © 2010–2011, Texas Instruments Incorporated

Calibration Example 2 (Overflow Possible)

This design example uses the nine-step procedure for calibrating the TMP512/13 where overflow is possible. Figure 33 illustrates how the same procedure is performed using the automated TMP512/13EVN software. The same numbers used in the nine-step example are used in the software example shown in Figure 33. Note also that Figure 33 illustrates which results correspond to which step (for example, the information entered in Step 1 is circled in Figure 33 and labeled).

1. Establish the following parameters:

   $V_{BUS_MAX} = 32$

   $V_{SHUNT_MAX} = 0.32$

   $R_{SHUNT} = 5$

2. Determine the maximum possible current using Equation 15:

$$\text{MaxPossible_I} = \frac{V_{SHUNT_MAX}}{R_{SHUNT}}$$

$$\text{MaxPossible_I} = 0.064 \tag{15}$$

3. Choose the desired maximum current value: Max_Expected_I, ≤ MaxPossible_I. This value is selected based on system expectations.

   Max_Expected_I = 0.06

4. Calculate the possible range of current LSBs. This calculation is done by first computing a range of LSB's that is appropriate for the design. Next, select an LSB withing this range. Note that the results will have the most resolution when the minimum LSB is selected. Typically, an LSB is selected to be the nearest round number to the minimum LSB.

$$\text{Minimum_LSB} = \frac{\text{Max_Expected_I}}{32767}$$

$$\text{Minimum_LSB} = 1.831 \times 10^{-6} \tag{16}$$

$$\text{Maximum_LSB} = \frac{\text{Max_Expected_I}}{4095}$$

$$\text{Maximum_LSB} = 14.652 \times 10^{-6} \tag{17}$$

   Choose an LSB in the range: Minimum_LSB < Selected_LSB < Maximum_LSB

   $\text{Current_LSB} = 1.9 \times 10^{-6}$

   Note:

   This value was selected to be a round number near the Minimum_LSB. This section allows for good resolution with a rounded LSB.

5. Compute the calibration register using Equation 18:

$$\text{Cal} = \text{trunc}\left(\frac{0.04096}{\text{Current_LSB} \times R_{SHUNT}}\right) \quad \text{Cal} = 4311 \tag{18}$$

6. Calculate the Power LSB using Equation 19. Equation 19 shows a general formula; because the bus voltage measurement LSB is always 4mV, the power formula reduces to calculate the result.

   Power_LSB = 20 Current_LSB

$$\text{Power_LSB} = 38 \times 10^{-6} \tag{19}$$

Copyright © 2010–2011, Texas Instruments Incorporated

7. Compute the maximum current and shunt voltage values (before overflow), as shown by Equation 20 and Equation 21. Note that both Equation 20 and Equation 21 involve an *If - then* condition.

$$\text{Max_Current} = \text{Current_LSB} \times 32767$$
$$\text{Max_Current} = 0.06226 \tag{20}$$

If Max_Current ≥ MaxPossible_I then
    Max_Current_Before_Overflow = MaxPossible_I
Else
    Max_Current_Before_Overflow = Max_Current
End If

(Note that Max_Current is less than MaxPossible_I in this example.)

Max_Current_Before_Overflow = 0.06226

$$\text{Max_ShuntVoltage} = \text{Max_Current_Before_Overflow} \times R_{SHUNT}$$
$$\text{Max_ShuntVoltage} = 0.3113 \tag{21}$$

If Max_ShuntVoltage ≥ V_{SHUNT_MAX}
    Max_ShuntVoltage_Before_Overflow = V_{SHUNT_MAX}
Else
    Max_ShuntVoltage_Before_Overflow= Max_ShuntVoltage
End If
(Note that Max_ShuntVoltage is less than V_{SHUNT_MAX} in this example.)
Max_ShuntVoltage_Before_Overflow = 0.3113

8. Compute the maximum power with Equation 22.

$$\text{MaximumPower} = \text{Max_Current_Before_Overflow} \times V_{BUS_MAX}$$
$$\text{MaximumPower} = 1.992 \tag{22}$$

9. (Optional second calibration step.) Compute the corrected full-scale calibration value based on measured current.

TMP513_Current = 0.06226

MeaShuntCurrent = 0.05

$$\text{Corrected_Full_Scale_Cal} = \text{trunc}\left(\frac{\text{Cal} \times \text{MeasShuntCurrent}}{\text{TMP513_Current}}\right)$$
$$\text{Corrected_Full_Scale_Cal} = 3462 \tag{23}$$

Copyright © 2010–2011, Texas Instruments Incorporated

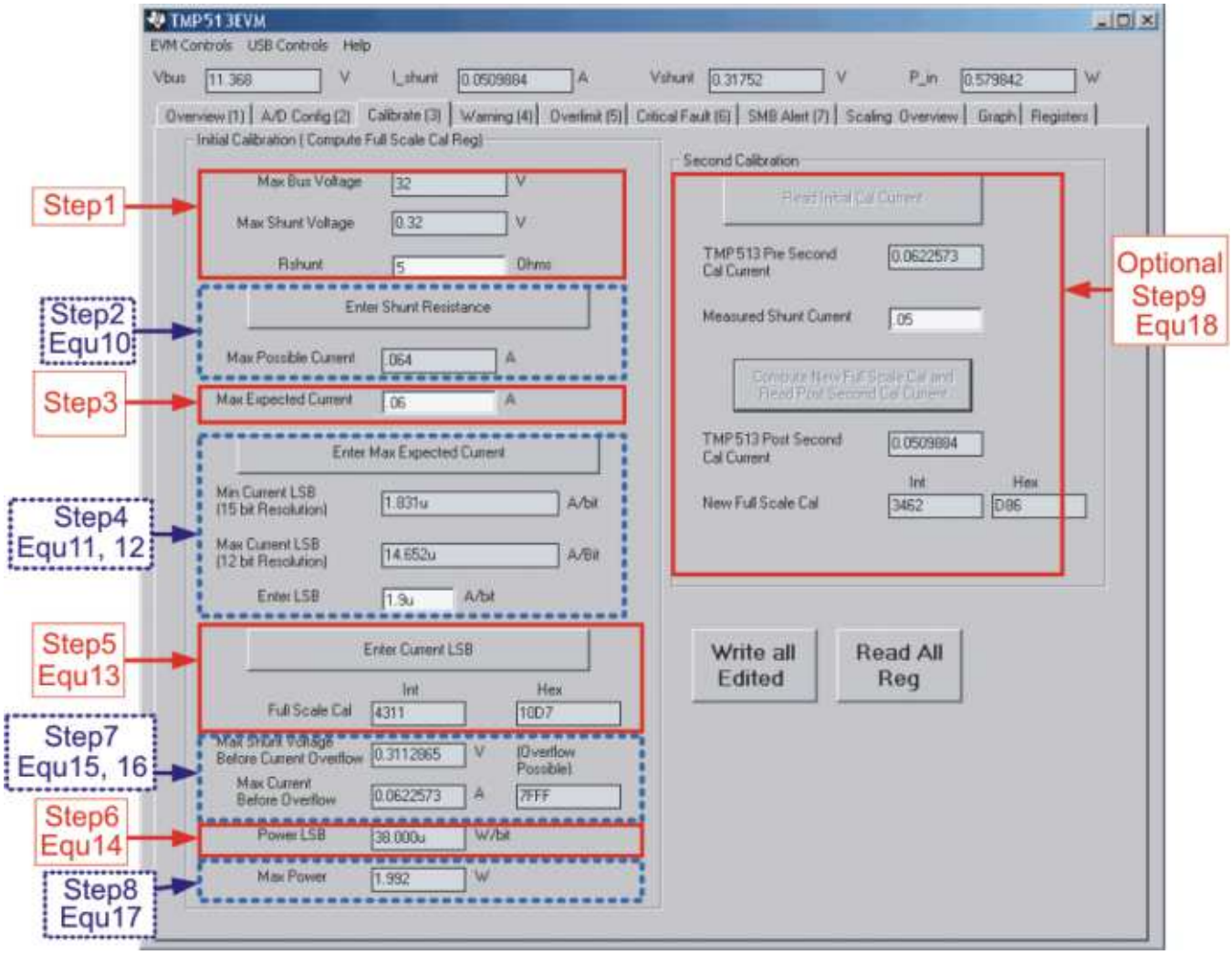

Figure 33. TMP512/513EVM Calibration Software Automatically Computes Calibration Steps 1-9

REGISTER INFORMATION

The TMP512/13 uses a bank of registers for holding configuration settings, measurement results, maximum/minimum limits, and status information. Table 3 summarizes the TMP512/13 registers. Register contents are updated 4µs after completion of the write command. Therefore, a 4µs delay is required between the completion of a write to a given register and a subsequent read of that register (without changing the pointer) when using SCL frequencies in excess of 1MHz.

Table 3. Summary of Register Set

POINTER ADDRESS			POWER-ON RESET		
HEX	REGISTER NAME	FUNCTION	BINARY	HEX	TYPE (1)
00	Configuration Register 1	All-register reset, settings for bus voltage range, PGA Gain, Bus ADC resolution/averaging, Shunt ADC resolution/averaging, one-shot, Operation Mode.	00111001 10011111	399F	R/$\overline{W}$
01	Configuration Register 2 TMP512	Settings for Temperature Continuous conversion, Remote Channels enable, Local Channel enable, resistance correction enable, Conversion rate bits, and GPIO mode bit and readback.	1011111110000x00	BF80/BF84	R/$\overline{W}$
01	Configuration Register 2 TMP513	Settings for Temperature Continuous conversion, Remote Channels enable, Local Channel enable, resistance correction enable, Conversion rate bits, and GPIO mode bit and readback.	11111111 10000x00	FF80/FF84	R/$\overline{W}$
02	Status Register	Contains the alert and conversion ready flags.	00000000 00000000	0000	R
03	SMBus Alert Mask/Enable Control Register	Contains masks to enable/disable the alert functions.	00000000 00000000	0000	R/$\overline{W}$
04	Shunt Voltage Result	Shunt voltage measurement result.	00000000 00000000	0000	R
05	Bus Voltage Result	Bus voltage measurement result.	00000000 00000000	0000	R
06	Power Result	Power measurement result.	00000000 00000000	0000	R
07	Shunt Current Result (2)	Contains the value of the current flowing through the shunt resistor.	00000000 00000000	0000	R
08	Local Temperature Result	Contains local temperature measurement result.	00000000 00000000	0000	R
09	Remote Temperature Result 1	Contains remote temperature measurement result.	00000000 00000000	0000	R
0A	Remote Temperature Result 2	Contains remote temperature measurement result.	00000000 00000000	0000	R
0B (3)	Remote Temperature Result 3	Contains remote temperature measurement result.	00000000 00000000	0000	R
0C	Shunt Voltage Positive Limit	Contains the positive limit for Shunt Voltage.	00000000 00000000	0000	R/$\overline{W}$
0D	Shunt Voltage Negative Limit	Contains the negative limit for Shunt Voltage.	00000000 00000000	0000	R/$\overline{W}$
0E	Bus Voltage Positive Limit	Contains the positive limit for Bus Voltage.	00000000 00000000	0000	R/$\overline{W}$
0F	Bus Voltage Negative Limit	Contains the negative limit for Bus Voltage.	00000000 00000000	0000	R/$\overline{W}$
10	Power Limit	Contains the positive limit for Power.	00000000 00000000	0000	R/$\overline{W}$
11	Local Temperature Limit	Contains positive limit for local temperature.	00101010 10000000	2A80	R/$\overline{W}$

(1) Type: **R** = Read-Only, **R/$\overline{W}$** = Read/Write.
(2) Current Register defaults to '0' because the Calibration Register defaults to '0', yielding a zero current value until the Calibration Register is programmed.
(3) For TMP513 only.

Copyright © 2010–2011, Texas Instruments Incorporated

Table 3. Summary of Register Set (continued)

POINTER ADDRESS			POWER-ON RESET		
HEX	REGISTER NAME	FUNCTION	BINARY	HEX	TYPE[1]
12	Remote Temperature Limit 1	Contains positive limit for remote temperature.	00101010 10000000	2A80	R/$\overline{W}$
13	Remote Temperature Limit 2	Contains positive limit for remote temperature.	00101010 10000000	2A80	R/$\overline{W}$
14[4]	Remote Temperature Limit 3	Contains positive limit for remote temperature.	00101010 10000000	2A80	R/$\overline{W}$
15	Shunt Calibration Register	Sets the current that corresponds to a full-scale drop across the shunt.	00000000 00000000	0000	R/$\overline{W}$
16	n-Factor 1	Contains the N-factor value for Remote Channel 1 and Hysteresis for temperature limits.	00000000 00000000	0000	R/$\overline{W}$
17	n-Factor 2	Contains the N-factor value for Remote Channel 2.	00000000 00000000	0000	R/$\overline{W}$
18[4]	n-Factor 3	Contains the N-factor value for Remote Channel 3.	00000000 00000000	0000	R/$\overline{W}$
1E/FE	Manufacturer ID Register	Contains the Manufacturer ID.	01010101 11111111	55FF	R
1F/FF	TMP512 Device ID Register	Contains the Device ID.	00100010 11111111	22FF	R
1F/FF	TMP513 Device ID Register	Contains the Device ID.	00100011 11111111	23FF	R

(4) For TMP513 only.

REGISTER DETAILS

All TMP512/13 registers are 16-bit registers. 16-bit register data are sent in two 8-bit bytes via the two-wire interface.

Configuration Register 1—Shunt Measurement Configuration 00h (Read/Write)

BIT #	D15	D14	D13	D12	D11	D10	D9	D8	D7	D6	D5	D4	D3	D2	D1	D0
BIT NAME	RST	ONE-SHOT	BRNG	PG1	PG0	BADC4	BADC3	BADC2	BADC1	SADC4	SADC3	SADC2	SADC1	MODE3	MODE2	MODE1
POR VALUE	0	0	1	1	1	0	0	1	1	0	0	1	1	1	1	1

Bit Descriptions

RST:	**Reset Bit**
Bit 15	Setting this bit to '1' generates a system reset that is the same as power-on reset. Resets all registers to default values; this bit self-clears.
ONE-SHOT	**One-Shot Bit**
Bit 14	Setting this bit to '1' generates a one-shot command.
BRNG:	**Bus Voltage Range**
Bit 13	0 = 16V FSR 1 = 32V FSR (default value)
PG:	**PGA (Shunt Voltage Only)**
Bits 12, 11	Sets PGA gain and range. Note that the PGA defaults to ÷8 (320mV range). Table 4 shows the gain and range for the various product gain settings.

Copyright © 2010–2011, Texas Instruments Incorporated

Table 4. PG Bit Settings[1]

PG1	PG0	GAIN	RANGE
0	0	1	±40mV
0	1	÷2	±80mV
1	0	÷4	±160mV
1	1	÷8	±320mV

(1) Shaded values are default.

BADC: **BADC Bus ADC Resolution/Averaging**

Bits 10–7 These bits adjust the Bus ADC resolution (9-, 10-, 11-, or 12-bit) or set the number of samples used when averaging results for the Bus Voltage Register (05h).

SADC: **SADC Shunt ADC Resolution/Averaging**

Bits 6–3 These bits adjust the Shunt ADC resolution (9-, 10-, 11-, or 12-bit) or set the number of samples used when averaging results for the Shunt Voltage Register (04h).

BADC (Bus) and SADC (Shunt) ADC resolution/averaging and conversion time settings are shown in Table 5.

Table 5. ADC Settings[1]

ADC4	ADC3	ADC2	ADC1	MODE/SAMPLES	CONVERSION TIME
0	X[2]	0	0	9-bit	105µs
0	X[2]	0	1	10-bit	185µs
0	X[2]	1	0	11-bit	345µs
0	X[2]	1	1	12-bit	665µs
1	0	0	0	12-bit	665µs
1	0	0	1	2	1.3ms
1	0	1	0	4	2.58ms
1	0	1	1	8	5.13ms
1	1	0	0	16	10.25ms
1	1	0	1	32	20.49ms
1	1	1	0	64	40.97ms
1	1	1	1	128	81.92ms

(1) Shaded values are default.
(2) X = Don't care.

MODE: **Operating Mode**

Bits 2–0 Selects continuous, triggered, or power-down mode of operation. These bits default to continuous shunt and bus measurement mode. The mode settings are shown in Table 6.

Table 6. Mode Settings[1]

MODE3	MODE2	MODE1	MODE
0	0	0	Power-Down[2]
0	0	1	Shunt Voltage, Triggered[3]
0	1	0	Bus Voltage, Triggered[3]
0	1	1	Shunt and Bus, Triggered[3]
1	0	0	ADC Off (disabled)[4]
1	0	1	Shunt Voltage, Continuous
1	1	0	Bus Voltage, Continuous
1	1	1	Shunt and Bus, Continuous

(1) Shaded values are default.
(2) Combination '000' stops converter immediately.
(3) In triggered modes the converter goes to power down. It can be triggered by a write of '1' to bit 14 (One-Shot) in Configuration Register 1 or by the delay scheme of the temperature sensor core. See Table 7.
(4) Combination '100' stops the converter at conversion end.

Copyright © 2010–2011, Texas Instruments Incorporated

Configuration Register 2—Temperature Measurement Configuration 01h (Read/Write)

BIT #	D15	D14	D13	D12	D11	D10	D9	D8	D7	D6	D5	D4	D3	D2	D1	D0
BIT NAME	CONT	REN3	REN2	REN1	LEN	RC	R2	R1	R0	—	—	—	—	GP	GPM1	GPM0
TMP512 POR VALUE	1	0	1	1	1	1	1	1	1	0	0	0	0	X	0	0
TMP513 POR VALUE	1	1	1	1	1	1	1	1	1	0	0	0	0	X	0	0

CONT: **Continuous Conversion**

Bit 15 — 0: When all bits 14 to 11 are '0', the temp sensor core goes immediately to shutdown mode. When all bits 14 to 11 are not '0', the temp sensor core stops when all enabled conversions are done. When this bit is '0', a one-shot command can be triggered by writing a "1" to bit 14 of Configuration Register 1.
1: Continuous temperature conversion mode.

REN3: **Remote Channel 3 Enable (TMP513 only)**

Bit 14 — 0: Remote channel 3 disabled.
1: Remote channel 3 enabled.

REN2: **Remote Channel 2 Enable**

Bit 13 — 0: Remote channel 2 disabled.
1: Remote channel 2 enabled.

REN1: **Remote Channel 1 Enable**

Bit 12 — 0: Remote channel 1 disabled.
1: Remote channel 1 enabled.

LEN: **Local Temperature Enable**

Bit 11 — 0: Local temperature disabled.
1: Local temperature enabled.

RC: **Resistance Correction**

Bit 10 — 0: Resistance correction disabled.
1: Resistance correction enabled.

R2, R1, R0: **Conversion Rate**

Bits 9-7 — These bits set the conversion rate as shown in Table 7.

Table 7. Conversion Rate Settings(1)

R2	R1	R0	CONVERSIONS/SEC
0	0	0	0.0625
0	0	1	0.125
0	1	0	0.25
0	1	1	0.5
1	0	0	1
1	0	1	2
1	1	0	4(2)
1	1	1	8(3)

(1) Shaded values are default.
(2) Conversion rate shown is for only one or two enabled measurement channels. When three channels are enabled, the conversion rate is 2 and 2/3 conversions per second. When four channels are enabled, the conversion rate is 2 per second.
(3) Conversion rate shown is for only one enabled measurement channel. When two channels are enabled, the conversion rate is 4 conversions per second. When three channels are enabled, the conversion rate is 2 and 2/3 conversions per second.

Copyright © 2010–2011, Texas Instruments Incorporated

When all of the following conditions are met, the temperature sensor core triggers a single conversion of the voltage measurement core at the same rate as the conversion rate shown by bits R2 to R0.

- The conversion rate is different than '111';
- There is at least one enabled temperature channel; and
- The voltage measurement core is in triggered mode of operation.

The temperature sensor core triggers a single conversion of the ADC core at the same rate as the conversion rate shown by R2 to R0.

GP:	**GPIO Read-Back**
Bit 2	Shows the state of the GPIO pin.
GPM:	**GPIO Mode**
Bits 1-0	The GPIO mode settings are shown in Table 8. GPIO should not be left floating at start-up.

Table 8. GPIO Mode Settings(1)

GPM[1]	GPM[0]	GPIO PIN	DESCRIPTION
0	0	Hi-Z	Use as an input for either of these modes.
0	1	Hi-Z	
1	0	0	Use to output 0 to GPIO pin
1	1	1	Use to output 1 to GPIO pin

(1) Shaded values are default.

Copyright © 2010–2011, Texas Instruments Incorporated

Status Register 02h (Read)

BIT #	D15	D14	D13	D12	D11	D10	D9	D8	D7	D6	D5	D4	D3	D2	D1	D0
BIT NAME	SHP	SHN	BVP	BVN	PWR	LCL	RM1	RM2	RM3	CVR	CRT	PVLD	SMBA	OVF	—	—
POR VALUE	0	0	0	0	0	0	0	0	0	0	0	0	0	0	0	0

The Status Register flags activate whenever any limit is violated, and latch if the alert is in *latch* mode. In latch mode, these flags are cleared when the Status Register is read (if the limit is exceeded, then at next conversion end, the flag sets again). In transparent mode, these flags are cleared when any corresponding limit is not violated any longer.

After power-up and initial setup, the Status Register should be read once to clear any flags set as a result of power-up values prior to setup.

Bit Descriptions

SHP:	**Shunt Positive Over-Voltage**
Bit 15	This bit is set to '1' when the result in the Shunt Voltage Register (04h) exceeds the level set in the Shunt Positive Limit Register (0Ch).
SHN:	**Shunt Negative Under-Voltage**
Bit 14	This bit is set to '1' when the result in the Shunt Voltage Register (04h) goes below the level set in the Shunt Negative Limit Register (0Dh).
BVP:	**Bus Positive Over-Voltage**
Bit 13	This bit is set to '1' when the result in the Bus Voltage Register (05h) exceeds the level set in the Bus Voltage Positive Limit Register (0Eh).
BVN:	**Bus Negative Under-Voltage**
Bit 12	This bit is set to '1' when the result in the Bus Voltage Register (05h) goes below the level set in the Bus Voltage Negative Limit Register (0Fh).
PWR:	**Power Over–Limit**
Bit 11	This bit is set to '1' when the result in the Power Register (06h) exceeds the level set in the Power Limit Register (10h).
LCL:	**Local Temperature Over-Limit**
Bit 10	This bit is set to '1' when the result in the Local Temperature Result Register (08h) exceeds the level set in the Local Temperature Limit Register (11h) plus half of the temperature hysteresis. It clears in transparent mode when the result in the Local Temperature Result Register (08h) is below the level set in the Local Temperature Limit Register (11h) minus half of the temperature hysteresis.
RM1:	**Remote Temperature 1 Over-Limit**
Bit 9	This bit is set to '1' when the result in the Remote Temperature Result 1 Register (09h) exceeds the level set in the Remote Temperature Limit 1 Register (12h) plus half of the temperature hysteresis. It also sets if, during conversion of remote channel 1, an open diode condition was detected. It clears in transparent mode when the result in the Remote Temperature Result 1 Register (09h) is below the level set in the Remote Temperature Limit 1 Register (12h) minus half of the temperature hysteresis, and the last conversion of channel 1 was done without *open-diode* detection.
RM2:	**Remote Temperature 2 Over-Limit**
Bit 8	This bit is set to '1' when the result in the Remote Temperature Result 2 Register (0Ah) exceeds the level set in the Remote Temperature Limit 2 Register (13h) plus half of the temperature hysteresis. It also sets if, during conversion of remote channel 2, an open diode condition was detected. It clears in transparent mode when the result in the Remote Temperature Result 2 Register (0Ah) is below the level set in the Remote Temperature Limit 2 Register (13h) minus half of the temperature hysteresis, and the last conversion of channel 2 was done without *open-diode* detection.

Copyright © 2010–2011, Texas Instruments Incorporated

Bit Descriptions (continued)

RM3:	**Remote Temperature 3 Over-Limit (TMP513 only)**
Bit 7	This bit is set to '1' when the result in the Remote Temperature Result 3 Register (0Bh) exceeds the level set in the Remote Temperature Limit 3 Register (14h) plus half of the temperature hysteresis. It sets also if during conversion of remote channel 3 an open diode condition was detected. It clears in transparent mode when the result in the Remote Temperature Result 3Register (0Bh) is below the level set in the Remote Temperature Limit 3 Register (14h) minus half of the temperature hysteresis and the last conversion of channel 3 was done without *open-diode* detection.
CVR:	**Conversion Ready**
Bit 6	The Conversion Ready line is provided to help coordinate one-shot conversions for shunt voltage, bus voltage, current and power measurements. The Conversion bit is set after all conversions, averaging, and multiplication events are complete. Conversion Ready clears under the following conditions: 1. Writing to the One-Shot bit in Configuration Register 1. 2. Reading the Status Register.
CRT:	**Conversion Ready Temperature**
Bit 5	The Conversion Ready Temperature line is provided to help coordinate one-shot conversions for local and remote temperature measurements. The Conversion bit is set after all enabled channels complete the respective conversions. Conversion Ready Temperature clears under the following conditions: 1. Writing to the One-Shot bit in Configuration Register 1. 2. Reading the Status Register.
PVLD:	**Power Valid Error**
Bit 4	In latch mode, this bit is set to '1' when the brown-out detect fires during a conversion. The flag sets to '1' at the conversion end. It clears by reading the Status Register.
SMBA:	**SMBus Alert**
Bit 3	This bit is set when the Alert pin is active. When in latch mode, it clears only on reading the Status Register, disabling the SMBus Alert function, or using SMBus Alert Response. In transparent mode, it clears when the triggering condition is not present.
OVF:	**Math Overflow**
Bit 2	This bit is set to '1' if an arithmetic operation resulted in an overflow error. It indicates that current and power data may be meaningless. It does not set the Alert pin.

Copyright © 2010–2011, Texas Instruments Incorporated

SMBus Alert Register—Mask and Alert Control Functions 03h (Read/Write)

BIT #	D15	D14	D13	D12	D11	D10	D9	D8	D7	D6	D5	D4	D3	D2	D1	D0
BIT NAME	SHPM	SHNM	BVPM	BVNM	PWRM	LCLM	R1M	R2M	R3M	CVRM	CRTM	PVLM	FC1	FC0	POL	LATCH
POR VALUE	0	0	0	0	0	0	0	0	0	0	0	0	0	0	0	0

Bits D4–D15 of the SMBus Alert Register mask correspond to bits D4 to D15 of the Status Register to prevent them from initiating an SMBus Alert. It does not prevent the Status Register bit from setting. Writing a '0' to an SMBus Alert Mask bit masks it from activating the SMBus Alert. All default values are '0'.

Bit Descriptions

SHPM: **Shunt Positive Over-Voltage Mask**
Bit 15
0: SHP flag in Status Register cannot activate Alert pin.
1: SHP flag (when set to '1') in Status Register activates Alert pin.

SHNM: **Shunt Negative Under-Voltage Mask**
Bit 14
0: SHN flag in Status Register cannot activate Alert pin.
1: SHN flag (when set to '1') in Status Register activates Alert pin.

BVPM: **Bus Voltage Positive Over-Voltage Mask**
Bit 13
0: BVP flag in Status Register cannot activate Alert pin.
1: BVP flag (when set to '1') in Status Register activates Alert pin.

BVNM: **Bus Voltage Negative Under-Voltage Mask**
Bit 12
0: BVN flag in Status Register cannot activate Alert pin.
1: BVN flag (when set to '1') in Status Register activates Alert pin.

PWRM: **Power Over-Limit Mask**
Bit 11
0: PWR flag in Status Register cannot activate Alert pin.
1: PWR flag (when set to '1') in Status Register activates Alert pin.

LCLM: **Local Temperature Over-Limit Mask**
Bit 10
0: LCL flag in Status Register cannot activate Alert pin.
1: LCL flag (when set to '1') in Status Register activates Alert pin.

R1M: **Remote Temperature1 Over-Limit Mask**
Bit 9
0: RM1 flag in Status Register cannot activate Alert pin.
1: RM1 flag (when set to '1') in Status Register activates Alert pin.

R2M: **Remote Temperature2 Over-Limit Mask**
Bit 8
0: RM2 flag in Status Register cannot activate Alert pin.
1: RM2 flag (when set to '1') in Status Register activates Alert pin.

R3M: **Remote Temperature3 Over-Limit Mask (TMP513 only)**
Bit 7
0: RM3 flag in Status Register cannot activate Alert pin.
1: RM3 flag (when set to '1') in Status Register activates Alert pin.

CVRM: **Conversion Ready Mask**
Bit 6
0: CVR flag in Status Register cannot activate Alert pin.
1: CVR flag (when set to '1') in Status Register activates Alert pin.

CRTM: **Conversion Ready Temperature Mask**
Bit 5
0: CRT flag in Status Register cannot activate Alert pin.
1: CRT flag (when set to '1') in Status Register activates Alert pin.

PVLM: **Power Valid Limit Mask**
Bit 4
0: PVLD flag in Status Register cannot activate Alert pin.
1: PVLD flag (when set to '1') in Status Register activates Alert pin.

Copyright © 2010–2011, Texas Instruments Incorporated

Bit Descriptions (continued)

FC0, FC1	**Fault Count Control Bits**
	The Fault Count Control Bits affect flags in SMBus Alert Register bits D15-D7.
Bit 3, 2	00: These flags are activated after the first conversion result with a violated limit.
	01: These flags are activated after the second consecutive conversion result with a violated limit.
	10: These flags are activated after the fourth consecutive conversion result with a violated limit.
	11: These flags are activated after the eighth consecutive conversion result with a violated limit.
POL:	**Alert Polarity**
Bit 1	0: Alert pin is active low.
	1: Alert pin is active high.
LATCH:	**Alert Mode of Operation**
Bit 0	0: Alert pin works in transparent mode. The SMB alert response function does not function. Alert is deasserted when the triggering condition goes away.
	1: Alert pin works in latch mode. The SMB alert response function functions when Alert pin is active. Alert will remain asserted even if the triggering condition goes away. Alert can be deasserted by reading the Status register (02h), using the SMBus Alert response function, resetting the part, or by disabling the alert function using the mask bits.

Copyright © 2010–2011, Texas Instruments Incorporated

Shunt Voltage Register 04h (Read-Only)

The Shunt Voltage Register stores the current shunt voltage reading, V_{SHUNT}. Shunt Voltage Register bits are shifted according to the PGA setting selected in Configuration Register 1 (00h). When multiple sign bits are present, they will all be the same value. Negative numbers are represented in twos complement format. Generate the twos complement of a negative number by complementing the absolute value binary number and adding 1. Extend the sign, denoting a negative number by setting the MSB = '1'. Extend the sign to any additional sign bits to form the 16-bit word.

Example: For a value of V_{SHUNT} = –320mV:

1. Take the absolute value (include accuracy to 0.01mV)==> 320.00
2. Translate this number to a whole decimal number ==> 32000
3. Convert it to binary==> 111 1101 0000 0000
4. Complement the binary result : 000 0010 1111 1111
5. Add 1 to the Complement to create the twos complement formatted result ==> 000 0011 0000 0000
6. Extend the sign and create the 16-bit word: 1000 0011 0000 0000 = 8300h (Remember to extend the sign to all sign-bits, as necessary based on the PGA setting.)

At PGA = ÷8, full-scale range = ±320mV (decimal = 32000, positive value hex = 7D00, negative value hex = 8300), and LSB = 10µV.

BIT #	D15	D14	D13	D12	D11	D10	D9	D8	D7	D6	D5	D4	D3	D2	D1	D0
BIT NAME	SIGN	SD14_8	SD13_8	SD12_8	SD11_8	SD10_8	SD9_8	SD8_8	SD7_8	SD6_8	SD5_8	SD4_8	SD3_8	SD2_8	SD1_8	SD0_8
POR VALUE	0	0	0	0	0	0	0	0	0	0	0	0	0	0	0	0

At PGA = ÷4, full-scale range = ±160mV (decimal = 16000, positive value hex = 3E80, negative value hex = C180), and LSB = 10µV.

BIT #	D15	D14	D13	D12	D11	D10	D9	D8	D7	D6	D5	D4	D3	D2	D1	D0
BIT NAME	SIGN	SIGN	SD13_4	SD12_4	SD11_4	SD10_4	SD9_4	SD8_4	SD7_4	SD6_4	SD5_4	SD4_4	SD3_4	SD2_4	SD1_4	SD0_4
POR VALUE	0	0	0	0	0	0	0	0	0	0	0	0	0	0	0	0

At PGA = ÷2, full-scale range = ±80mV (decimal = 8000, positive value hex = 1F40, negative value hex = E0C0), and LSB = 10µV.

BIT #	D15	D14	D13	D12	D11	D10	D9	D8	D7	D6	D5	D4	D3	D2	D1	D0
BIT NAME	SIGN	SIGN	SIGN	SD12_2	SD11_2	SD10_2	SD9_2	SD8_2	SD7_2	SD6_2	SD5_2	SD4_2	SD3_2	SD2_2	SD1_2	SD0_2
POR VALUE	0	0	0	0	0	0	0	0	0	0	0	0	0	0	0	0

At PGA = ÷1, full-scale range = ±40mV (decimal = 4000, positive value hex = 0FA0, negative value hex = F060), and LSB = 10µV.

BIT #	D15	D14	D13	D12	D11	D10	D9	D8	D7	D6	D5	D4	D3	D2	D1	D0
BIT NAME	SIGN	SIGN	SIGN	SIGN	SD11_1	SD10_1	SD9_1	SD8_1	SD7_1	SD6_1	SD5_1	SD4_1	SD3_1	SD2_1	SD1_1	SD0_1
POR VALUE	0	0	0	0	0	0	0	0	0	0	0	0	0	0	0	0

Copyright © 2010–2011, Texas Instruments Incorporated

Table 9. Shunt Voltage Register Format[1]

V_{SHUNT} Reading (mV)	Decimal Value	PGA = ÷ 8 (D15….....D0)	PGA = ÷ 4 (D15….....D0)	PGA = ÷ 2 (D15….....D0)	PGA = ÷ 1 (D15….....D0)
320.02	32002	0111 1101 0000 0000	0011 1110 1000 0000	0001 1111 0100 0000	0000 1111 1010 0000
320.01	32001	0111 1101 0000 0000	0011 1110 1000 0000	0001 1111 0100 0000	0000 1111 1010 0000
320.00	32000	0111 1101 0000 0000	0011 1110 1000 0000	0001 1111 0100 0000	0000 1111 1010 0000
319.99	31999	0111 1100 1111 1111	0011 1110 1000 0000	0001 1111 0100 0000	0000 1111 1010 0000
319.98	31998	0111 1100 1111 1110	0011 1110 1000 0000	0001 1111 0100 0000	0000 1111 1010 0000
⋮	⋮	⋮	⋮	⋮	⋮
160.02	16002	0011 1110 1000 0010	0011 1110 1000 0000	0001 1111 0100 0000	0000 1111 1010 0000
160.01	16001	0011 1110 1000 0001	0011 1110 1000 0000	0001 1111 0100 0000	0000 1111 1010 0000
160.00	16000	0011 1110 1000 0000	0011 1110 1000 0000	0001 1111 0100 0000	0000 1111 1010 0000
159.99	15999	0011 1110 0111 1111	0011 1110 0111 1111	0001 1111 0100 0000	0000 1111 1010 0000
159.98	15998	0011 1110 0111 1110	0011 1110 0111 1110	0001 1111 0100 0000	0000 1111 1010 0000
⋮	⋮	⋮	⋮	⋮	⋮
80.02	8002	0001 1111 0100 0010	0001 1111 0100 0010	0001 1111 0100 0000	0000 1111 1010 0000
80.01	8001	0001 1111 0100 0001	0001 1111 0100 0001	0001 1111 0100 0000	0000 1111 1010 0000
80.00	8000	0001 1111 0100 0000	0001 1111 0100 0000	0001 1111 0100 0000	0000 1111 1010 0000
79.99	7999	0001 1111 0011 1111	0001 1111 0011 1111	0001 1111 0011 1111	0000 1111 1010 0000
79.98	7998	0001 1111 0011 1110	0001 1111 0011 1110	0001 1111 0011 1110	0000 1111 1010 0000
⋮	⋮	⋮	⋮	⋮	⋮
40.02	4002	0000 1111 1010 0010	0000 1111 1010 0010	0000 1111 1010 0010	0000 1111 1010 0000
40.01	4001	0000 1111 1010 0001	0000 1111 1010 0001	0000 1111 1010 0001	0000 1111 1010 0000
40.00	4000	0000 1111 1010 0000	0000 1111 1010 0000	0000 1111 1010 0000	0000 1111 1010 0000
39.99	3999	0000 1111 1001 1111	0000 1111 1001 1111	0000 1111 1001 1111	0000 1111 1001 1111
39.98	3998	0000 1111 1001 1110	0000 1111 1001 1110	0000 1111 1001 1110	0000 1111 1001 1110
⋮	⋮	⋮	⋮	⋮	⋮
0.02	2	0000 0000 0000 0010	0000 0000 0000 0010	0000 0000 0000 0010	0000 0000 0000 0010
0.01	1	0000 0000 0000 0001	0000 0000 0000 0001	0000 0000 0000 0001	0000 0000 0000 0001
0	0	0000 0000 0000 0000	0000 0000 0000 0000	0000 0000 0000 0000	0000 0000 0000 0000
–0.01	–1	1111 1111 1111 1111	1111 1111 1111 1111	1111 1111 1111 1111	1111 1111 1111 1111
–0.02	–2	1111 1111 1111 1110	1111 1111 1111 1110	1111 1111 1111 1110	1111 1111 1111 1110
⋮	⋮	⋮	⋮	⋮	⋮
–39.98	–3998	1111 0000 0110 0010	1111 0000 0110 0010	1111 0000 0110 0010	1111 0000 0110 0010
–39.99	–3999	1111 0000 0110 0001	1111 0000 0110 0001	1111 0000 0110 0001	1111 0000 0110 0001
–40.00	–4000	1111 0000 0110 0000	1111 0000 0110 0000	1111 0000 0110 0000	1111 0000 0110 0000
–40.01	–4001	1111 0000 0101 1111	1111 0000 0101 1111	1111 0000 0101 1111	1111 0000 0110 0000
–40.02	–4002	1111 0000 0101 1110	1111 0000 0101 1110	1111 0000 0101 1110	1111 0000 0110 0000
⋮	⋮	⋮	⋮	⋮	⋮
–79.98	–7998	1110 0000 1100 0010	1110 0000 1100 0010	1110 0000 1100 0010	1111 0000 0110 0000
–79.99	–7999	1110 0000 1100 0001	1110 0000 1100 0001	1110 0000 1100 0001	1111 0000 0110 0000
–80.00	–8000	1110 0000 1100 0000	1110 0000 1100 0000	1110 0000 1100 0000	1111 0000 0110 0000
–80.01	–8001	1110 0000 1011 1111	1110 0000 1011 1111	1110 0000 1100 0000	1111 0000 0110 0000
–80.02	–8002	1110 0000 1011 1110	1110 0000 1011 1110	1110 0000 1100 0000	1111 0000 0110 0000
⋮	⋮	⋮	⋮	⋮	⋮
–159.98	–15998	1100 0001 1000 0010	1100 0001 1000 0010	1110 0000 1100 0000	1111 0000 0110 0000
–159.99	–15999	1100 0001 1000 0001	1100 0001 1000 0001	1110 0000 1100 0000	1111 0000 0110 0000
–160.00	–16000	1100 0001 1000 0000	1100 0001 1000 0000	1110 0000 1100 0000	1111 0000 0110 0000
–160.01	–16001	1100 0001 0111 1111	1100 0001 1000 0000	1110 0000 1100 0000	1111 0000 0110 0000
–160.02	–16002	1100 0001 0111 1110	1100 0001 1000 0000	1110 0000 1100 0000	1111 0000 0110 0000
⋮	⋮	⋮	⋮	⋮	⋮
–319.98	–31998	1000 0011 0000 0010	1100 0001 1000 0000	1110 0000 1100 0000	1111 0000 0110 0000
–319.99	–31999	1000 0011 0000 0001	1100 0001 1000 0000	1110 0000 1100 0000	1111 0000 0110 0000
–320.00	–32000	1000 0011 0000 0000	1100 0001 1000 0000	1110 0000 1100 0000	1111 0000 0110 0000
–320.01	–32001	1000 0011 0000 0000	1100 0001 1000 0000	1110 0000 1100 0000	1111 0000 0110 0000
–320.02	–32002	1000 0011 0000 0000	1100 0001 1000 0000	1110 0000 1100 0000	1111 0000 0110 0000

(1) Out-of-range values are shaded.

Copyright © 2010–2011, Texas Instruments Incorporated

Bus Voltage Register 05h (Read-Only)

The Bus Voltage Register stores the most recent bus voltage reading, V_{BUS}.

At full-scale range = 32V (decimal = 8000, hex = 1F40), and LSB = 4mV.

BIT #	D15	D14	D13	D12	D11	D10	D9	D8	D7	D6	D5	D4	D3	D2	D1	D0
BIT NAME	BD12	BD11	BD10	BD9	BD8	BD7	BD6	BD5	BD4	BD3	BD2	BD1	BD0	—	—	—
POR VALUE	0	0	0	0	0	0	0	0	0	0	0	0	0	0	0	0

At full-scale range = 16V (decimal = 4000, hex = 0FA0), and LSB = 4mV.

BIT #	D15	D14	D13	D12	D11	D10	D9	D8	D7	D6	D5	D4	D3	D2	D1	D0
BIT NAME	0	BD11	BD10	BD9	BD8	BD7	BD6	BD5	BD4	BD3	BD2	BD1	BD0	—	—	—
POR VALUE	0	0	0	0	0	0	0	0	0	0	0	0	0	0	0	0

Power Register 06h (Read-Only)

Full-scale range and LSB are set by the Calibration Register. See the *Programming the TMP512/13 Power Measurement Engine* section.

BIT #	D15	D14	D13	D12	D11	D10	D9	D8	D7	D6	D5	D4	D3	D2	D1	D0
BIT NAME	PD15	PD14	PD13	PD12	PD11	PD10	PD9	PD8	PD7	PD6	PD5	PD4	PD3	PD2	PD1	PD0
POR VALUE	0	0	0	0	0	0	0	0	0	0	0	0	0	0	0	0

The Power Register records power in watts by multiplying the values of the current with the value of the bus voltage according to the equation:

$$\text{Power} = \frac{\text{Current} \times \text{BusVoltage}}{5000}$$

Current Register 07h (Read-Only)

Full-scale range and LSB depend on the value entered in the Calibration Register. See the *Programming the TMP512/13 Power Measurement Engine* section. Negative values are stored in twos complement format.

BIT #	D15	D14	D13	D12	D11	D10	D9	D8	D7	D6	D5	D4	D3	D2	D1	D0
BIT NAME	CSIGN	CD14	CD13	CD12	CD11	CD10	CD9	CD8	CD7	CD6	CD5	CD4	CD3	CD2	CD1	CD0
POR VALUE	0	0	0	0	0	0	0	0	0	0	0	0	0	0	0	0

The value of the Current Register is calculated by multiplying the value in the Shunt Voltage Register with the value in the Calibration Register according to the equation:

$$\text{Current} = \frac{\text{ShuntVoltage} \times \text{Calibration Register}}{4096}$$

Copyright © 2010–2011, Texas Instruments Incorporated

Local Temperature Result Register 08h (Read-Only)

BIT #	D15	D14	D13	D12	D11	D10	D9	D8	D7	D6	D5	D4	D3	D2	D1	D0
BIT NAME	T12	T11	T10	T9	T8	T7	T6	T5	T4	T3	T2	T1	T0	—	$\overline{\text{PVLD}}$	—
POR VALUE	0	0	0	0	0	0	0	0	0	0	0	0	0	0	0	0

The data format is 13 bits, 0.0625°C per bit. Full-scale allows display up to ±256°C.

T12–T0: **Temperature Result**

Bits 15-3 Shows the temperature result according to the format shown in Table 10.

Table 10. 13-Bit Temperature Data Format

TEMPERATURE (°C)	DIGITAL OUTPUT (BINARY)	HEX
150	0 1001 0110 0000	0960
128	0 1000 0000 0000	0800
127.9375	0 0111 1111 1111	07FF
100	0 0110 0100 0000	0640
80	0 0101 0000 0000	0500
75	0 0100 1011 0000	04B0
50	0 0011 0010 0000	0320
25	0 0001 1001 0000	0190
0.25	0 0000 0000 0100	0004
0	0 0000 0000 0000	0000
–0.25	1 1111 1111 1100	1FFC
–25	1 1110 0111 0000	1E70
–55	1 1100 1001 0000	1C90

For positive temperatures (for example, +50°C):

Twos complement is not performed on positive numbers. Therefore, simply convert the number to binary code with the 13-bit, left-justified format, and MSB = 0 to denote a positive sign.

Example: (+50°C)/(0.0625°C/count) = 800 = 320h = 0011 0010 0000

For negative temperatures (for example, –25°C):

Generate the twos complement of a negative number by complementing the absolute value binary number and adding 1. Denote a negative number with MSB = 1.

Example: (–25°C)/(0.0625°C/count) = 400 = 190h = 0001 1001 0000

Twos complement format: 1110 0110 1111 + 1 = 1110 0111 0000

PVLD **Power Valid Flag**

Bit 1 This bit is the power valid flag.

The TMP512/13 do not start a temperature conversion if the power supply is not valid. If the voltage is less than 2.7V during a conversion, the PVLD bit is set to '1' and the temperature result may be incorrect.

Copyright © 2010–2011, Texas Instruments Incorporated

Remote Temperature Result 1 Register 09h, Remote Temperature Result 2 Register 0Ah, Remote Temperature Result 3 Register (TMP513 Only) 0Bh (Read-Only)

BIT #	D15	D14	D13	D12	D11	D10	D9	D8	D7	D6	D5	D4	D3	D2	D1	D0
BIT NAME	RT12	RT11	RT10	RT9	RT8	RT7	RT6	RT5	RT4	RT3	RT2	RT1	RT0	—	$\overline{\text{PVLD}}$	DO
POR VALUE	0	0	0	0	0	0	0	0	0	0	0	0	0	0	0	0

The data format is 13 bits, 0.0625°C per bit. Full-scale allows display up to ±256°C.

RT12–RT0:	**Remote Temperature Result**
Bits 3-15	Shows the remote temperature measurement result.
PVLD	**Power Valid Flag**
Bit 1	This bit is the power valid flag.
	The TMP512/13 do not start a temperature conversion if the power supply is not valid. If the voltage is less than 2.7V during a conversion, the PVLD bit is set to '1' and the temperature result may be incorrect.
DO	**Diode Open Flag**
Bit 0	This bit is the diode open flag.
	If the Remote Channels are open during a conversion, then Diode Open bit is set at the end of the conversion.

Shunt Positive Limit Register 0Ch (Read/Write)

At full-scale range = ±320mV, 15-bit + sign, LSB = 10µV (decimal = 32000, positive value hex = 7D00, negative value hex = 8300).

BIT #	D15	D14	D13	D12	D11	D10	D9	D8	D7	D6	D5	D4	D3	D2	D1	D0
BIT NAME	SWP SIGN	SWP14	SWP13	SWP12	SWP11	SWP10	SWP9	SWP8	SWP7	SWP6	SWP5	SWP4	SWP3	SWP2	SWP1	SWP0
POR VALUE	0	0	0	0	0	0	0	0	0	0	0	0	0	0	0	0

Shunt Negative Limit Register 0Dh (Read/Write)

At full-scale range = ±320mV (decimal = 32000, positive value hex = 7D00, negative value hex = 8300). 15 bit + sign, LSB = 10µV.

BIT #	D15	D14	D13	D12	D11	D10	D9	D8	D7	D6	D5	D4	D3	D2	D1	D0
BIT NAME	SWN SIGN	SWN14	SWN13	SWN12	SWN11	SWN10	SWN9	SWN8	SWN7	SWN6	SWN5	SWN4	SWN3	SWN2	SWN1	SWN0
POR VALUE	0	0	0	0	0	0	0	0	0	0	0	0	0	0	0	0

Bus Voltage Positive Limit Register 0Eh (Read/Write)

At full-scale range = 32V (decimal = 8000, hex = 1F40), and LSB = 4mV.

BIT #	D15	D14	D13	D12	D11	D10	D9	D8	D7	D6	D5	D4	D3	D2	D1	D0
BIT NAME	BWU12	BWU11	BWU10	BWU9	BWU8	BWU7	BWU6	BWU5	BWU4	BWU3	BWU2	BWU1	BWU0	—	—	—
POR VALUE	0	0	0	0	0	0	0	0	0	0	0	0	0	0	0	0

Copyright © 2010–2011, Texas Instruments Incorporated

Bus Voltage Negative Limit Register 0Fh (Read/Write)

At full-scale range = 32V (decimal = 8000, hex = 1F40), and LSB = 4mV.

BIT #	D15	D14	D13	D12	D11	D10	D9	D8	D7	D6	D5	D4	D3	D2	D1	D0
BIT NAME	BUO12	BUO11	BUO10	BUO9	BUO8	BUO7	BUO6	BUO5	BUO4	BUO3	BUO2	BUO1	BUO0	—	—	—
POR VALUE	0	0	0	0	0	0	0	0	0	0	0	0	0	0	0	0

Power Limit Register 10h (Read/Write)

At full-scale range, same as the Power Register (06h).

BIT #	D15	D14	D13	D12	D11	D10	D9	D8	D7	D6	D5	D4	D3	D2	D1	D0
BIT NAME	PW15	PW14	PW13	PW12	PW11	PW10	PW9	PW8	PW7	PW6	PW5	PW4	PW3	PW2	PW1	PW0
POR VALUE	0	0	0	0	0	0	0	0	0	0	0	0	0	0	0	0

Local Temperature Limit Register 11h, Remote Temperature Limit 1 Register 12h, Remote Temperature Limit 2 Register 13h, Remote Temperature Limit 3 Register 14h (TMP513 Only) (Read/Write)

BIT #	D15	D14	D13	D12	D11	D10	D9	D8	D7	D6	D5	D4	D3	D2	D1	D0
BIT NAME	TH12	TH11	TH10	TH9	TH8	TH7	TH6	TH5	TH4	TH3	TH2	TH1	TH0	—	—	—
POR VALUE	0	0	1	0	1	0	1	0	1	0	0	0	0	0	0	0

The data format is 13 bits.

TH12–TH0:	Temperature Limit
Bits 15-3	Shows the temperature limit.

Shunt Calibration Register 15h (Read/Write)

Current and power calibration are set in the Calibration Register. Note that bit D0 is not used in the calculation. This register sets the current that corresponds to a full-scale drop across the shunt. Full-scale range and the LSB of the current and power measurement depend on the value entered in this register. See the *Programming the TMP512/13 Power Measurement Engine* section. This register is suitable for use in overall system calibration. Note that the '0' POR values are all default.

BIT #	D15	D14	D13	D12	D11	D10	D9	D8	D7	D6	D5	D4	D3	D2	D1	D0[1]
BIT NAME	FS15	FS14	FS13	FS12	FS11	FS10	FS9	FS8	FS7	FS6	FS5	FS4	FS3	FS2	FS1	FS0
POR VALUE	0	0	0	0	0	0	0	0	0	0	0	0	0	0	0	0

(1) D0 is a void bit and is always '0'. It is not possible to write a '1' to D0.

Copyright © 2010–2011, Texas Instruments Incorporated

n-Factor 1 Register 16h (Read/Write)

BIT #	D15	D14	D13	D12	D11	D10	D9	D8	D7	D6	D5	D4	D3	D2	D1	D0
BIT NAME	NF7	NF6	NF5	NF4	NF3	NF2	NF1	NF0	HST7	HST6	HST5	HST4	HST3	HST2	HST1	HST0
POR VALUE	0	0	0	0	0	0	0	0	0	0	0	0	0	0	0	0

NF7–NF0: **n-Factor Bits**

Bits 15-8 Shows the n-factor for Channel 1 according to the range indicated in Table 11.

Table 11. n-Factor Range(1)

N_{ADJUST}			n
BINARY	HEX	DECIMAL	
0111 1111	7F	127	1.747977
0000 1010	0A	10	1.042759
0000 1000	08	8	1.035616
0000 0110	06	6	1.028571
0000 0100	04	4	1.021622
0000 0010	02	2	1.014765
0000 0001	01	1	1.011371
0000 0000	00	0	1.008
1111 1111	FF	–1	1.004651
1111 1110	FE	–2	1.001325
1111 1100	FC	–4	0.994737
1111 1010	FA	–6	0.988235
1111 1000	F8	–8	0.981818
1111 0110	F6	–10	0.975484
1000 0000	80	–128	0.706542

(1) Shaded values are default.

HST7–HST0: **Hysteresis Register Bits**

Bits 7-0 The hysteresis register is binary coded. 1LSB is equal to 0.5°C, so the possible hysteresis range is 0°C to 127.5°C.

n-Factor 2 Register 17h (Read/Write)

BIT #	D15	D14	D13	D12	D11	D10	D9	D8	D7	D6	D5	D4	D3	D2	D1	D0
BIT NAME	NF7	NF6	NF5	NF4	NF3	NF2	NF1	NF0	—	—	—	—	—	—	—	—
POR VALUE	0	0	0	0	0	0	0	0	0	0	0	0	0	0	0	0

NF7–NF0: **n-Factor Bits**

Bits 15-8 Shows the n-factor for Channel 2 according to the range indicated in Table 11.

n-Factor 3 Register 18h (TMP513 Only) (Read/Write)

BIT #	D15	D14	D13	D12	D11	D10	D9	D8	D7	D6	D5	D4	D3	D2	D1	D0
BIT NAME	NF7	NF6	NF5	NF4	NF3	NF2	NF1	NF0	—	—	—	—	—	—	—	—
POR VALUE	0	0	0	0	0	0	0	0	0	0	0	0	0	0	0	0

NF7–NF0: **n-Factor Bits**

Bits 15-8 Shows the n-factor for Channel 3 according to the range indicated in Table 11.

Copyright © 2010–2011, Texas Instruments Incorporated

Manufacturer ID Register 1Eh and FEh (Read-Only)

BIT #	D15	D14	D13	D12	D11	D10	D9	D8	D7	D6	D5	D4	D3	D2	D1	D0
BIT NAME	ID7	ID6	ID5	ID4	ID3	ID2	ID1	ID0	—	—	—	—	—	—	—	—
POR VALUE	0	1	0	1	0	1	0	1	1	1	1	1	1	1	1	1

ID7–ID0: **Identification Register Bits**

Bits 15-8 These bits provide the manufacturer ID.

Device ID Register 1Fh and FFh (Read-Only)

BIT #	D15	D14	D13	D12	D11	D10	D9	D8	D7	D6	D5	D4	D3	D2	D1	D0
BIT NAME	DID7	DID6	DID5	DID4	DID3	DID2	DID1	DID0	—	—	—	—	—	—	—	—
TMP512 POR VALUE	0	0	1	0	0	0	1	0	1	1	1	1	1	1	1	1
TMP513 POR VALUE	0	0	1	0	0	0	1	1	1	1	1	1	1	1	1	1

DID7–DID0: **Identification Register Bits**

Bits 15-8 These bits provide the device ID.

Copyright © 2010–2011, Texas Instruments Incorporated

REVISION HISTORY

NOTE: Page numbers for previous revisions may differ from page numbers in the current version.

Changes from Original (June, 2010) to Revision A **Page**

- Removed *product preview* indications for QFN-16 package option of TMP513 throughout document 1
- Added package information for QFN-16 version of TMP512 2
- Deleted footnote indicating TMP513 QFN-16 package currently unavailable 2
- Updated *Thermal Information Tables* to reflect new package availability for TMP512 3
- Added RSA package pinout (QFN-16)and *Pin Descriptions* table for TMP512 6
- Deleted footnote indicating that QFN package of TMP513 is product preview 7

Copyright © 2010–2011, Texas Instruments Incorporated

PACKAGING INFORMATION

Orderable part number	Status (1)	Material type (2)	Package | Pins	Package qty | Carrier	RoHS (3)	Lead finish/ Ball material (4)	MSL rating/ Peak reflow (5)	Op temp (°C)	Part marking (6)
TMP512AID	Obsolete	Production	SOIC (D) | 14	-	-	Call TI	Call TI	-40 to 125	TMP512A
TMP512AIDR	Active	Production	SOIC (D) | 14	2500 | LARGE T&R	Yes	NIPDAU	Level-2-260C-1 YEAR	-40 to 125	TMP512A
TMP512AIDR.A	Active	Production	SOIC (D) | 14	2500 | LARGE T&R	Yes	NIPDAU	Level-2-260C-1 YEAR	-40 to 125	TMP512A
TMP512AIRSAR	Active	Production	QFN (RSA) | 16	3000 | LARGE T&R	Yes	NIPDAU	Level-2-260C-1 YEAR	-40 to 125	TMP512A
TMP512AIRSAR.A	Active	Production	QFN (RSA) | 16	3000 | LARGE T&R	Yes	NIPDAU	Level-2-260C-1 YEAR	-40 to 125	TMP512A
TMP512AIRSAT	Obsolete	Production	QFN (RSA) | 16	-	-	Call TI	Call TI	-40 to 125	TMP512A
TMP513AID	Obsolete	Production	SOIC (D) | 16	-	-	Call TI	Call TI	-40 to 125	TMP513A
TMP513AIDR	Active	Production	SOIC (D) | 16	2500 | LARGE T&R	Yes	NIPDAU	Level-2-260C-1 YEAR	-40 to 125	TMP513A
TMP513AIDR.A	Active	Production	SOIC (D) | 16	2500 | LARGE T&R	Yes	NIPDAU	Level-2-260C-1 YEAR	-40 to 125	TMP513A
TMP513AIRSAR	Active	Production	QFN (RSA) | 16	3000 | LARGE T&R	Yes	NIPDAU	Level-2-260C-1 YEAR	-40 to 125	TMP513A
TMP513AIRSAR.A	Active	Production	QFN (RSA) | 16	3000 | LARGE T&R	Yes	NIPDAU	Level-2-260C-1 YEAR	-40 to 125	TMP513A
TMP513AIRSARG4	Active	Production	QFN (RSA) | 16	3000 | LARGE T&R	Yes	NIPDAU	Level-2-260C-1 YEAR	-40 to 125	TMP513A
TMP513AIRSARG4.A	Active	Production	QFN (RSA) | 16	3000 | LARGE T&R	Yes	NIPDAU	Level-2-260C-1 YEAR	-40 to 125	TMP513A
TMP513AIRSAT	Obsolete	Production	QFN (RSA) | 16	-	-	Call TI	Call TI	-40 to 125	TMP513A

(1) **Status:** For more details on status, see our product life cycle.

(2) **Material type:** When designated, preproduction parts are prototypes/experimental devices, and are not yet approved or released for full production. Testing and final process, including without limitation quality assurance, reliability performance testing, and/or process qualification, may not yet be complete, and this item is subject to further changes or possible discontinuation. If available for ordering, purchases will be subject to an additional waiver at checkout, and are intended for early internal evaluation purposes only. These items are sold without warranties of any kind.

(3) **RoHS values:** Yes, No, RoHS Exempt. See the TI RoHS Statement for additional information and value definition.

(4) **Lead finish/Ball material:** Parts may have multiple material finish options. Finish options are separated by a vertical ruled line. Lead finish/Ball material values may wrap to two lines if the finish value exceeds the maximum column width.

(5) **MSL rating/Peak reflow:** The moisture sensitivity level ratings and peak solder (reflow) temperatures. In the event that a part has multiple moisture sensitivity ratings, only the lowest level per JEDEC standards is shown. Refer to the shipping label for the actual reflow temperature that will be used to mount the part to the printed circuit board.

(6) **Part marking:** There may be an additional marking, which relates to the logo, the lot trace code information, or the environmental category of the part.

Multiple part markings will be inside parentheses. Only one part marking contained in parentheses and separated by a "~" will appear on a part. If a line is indented then it is a continuation of the previous line and the two combined represent the entire part marking for that device.

Important Information and Disclaimer: The information provided on this page represents TI's knowledge and belief as of the date that it is provided. TI bases its knowledge and belief on information provided by third parties, and makes no representation or warranty as to the accuracy of such information. Efforts are underway to better integrate information from third parties. TI has taken and continues to take reasonable steps to provide representative and accurate information but may not have conducted destructive testing or chemical analysis on incoming materials and chemicals. TI and TI suppliers consider certain information to be proprietary, and thus CAS numbers and other limited information may not be available for release.

In no event shall TI's liability arising out of such information exceed the total purchase price of the TI part(s) at issue in this document sold by TI to Customer on an annual basis.

TAPE AND REEL INFORMATION

REEL DIMENSIONS

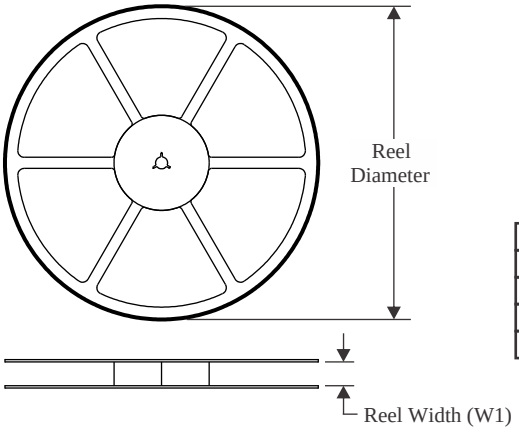

TAPE DIMENSIONS

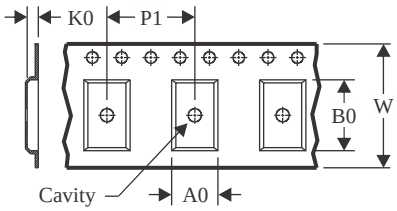

A0	Dimension designed to accommodate the component width
B0	Dimension designed to accommodate the component length
K0	Dimension designed to accommodate the component thickness
W	Overall width of the carrier tape
P1	Pitch between successive cavity centers

QUADRANT ASSIGNMENTS FOR PIN 1 ORIENTATION IN TAPE

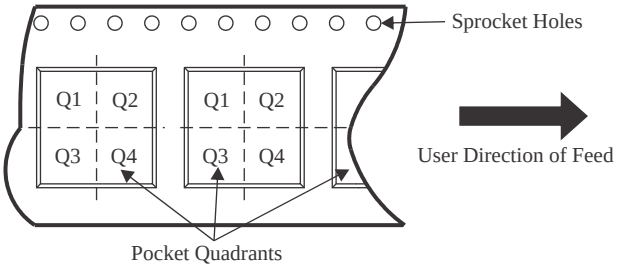

*All dimensions are nominal

Device	Package Type	Package Drawing	Pins	SPQ	Reel Diameter (mm)	Reel Width W1 (mm)	A0 (mm)	B0 (mm)	K0 (mm)	P1 (mm)	W (mm)	Pin1 Quadrant
TMP512AIDR	SOIC	D	14	2500	330.0	16.4	6.5	9.0	2.1	8.0	16.0	Q1
TMP512AIRSAR	QFN	RSA	16	3000	330.0	12.4	4.25	4.25	1.15	8.0	12.0	Q2
TMP513AIDR	SOIC	D	16	2500	330.0	16.4	6.5	10.3	2.1	8.0	16.0	Q1
TMP513AIRSAR	QFN	RSA	16	3000	330.0	12.4	4.25	4.25	1.15	8.0	12.0	Q2
TMP513AIRSARG4	QFN	RSA	16	3000	330.0	12.4	4.25	4.25	1.15	8.0	12.0	Q2

TAPE AND REEL BOX DIMENSIONS

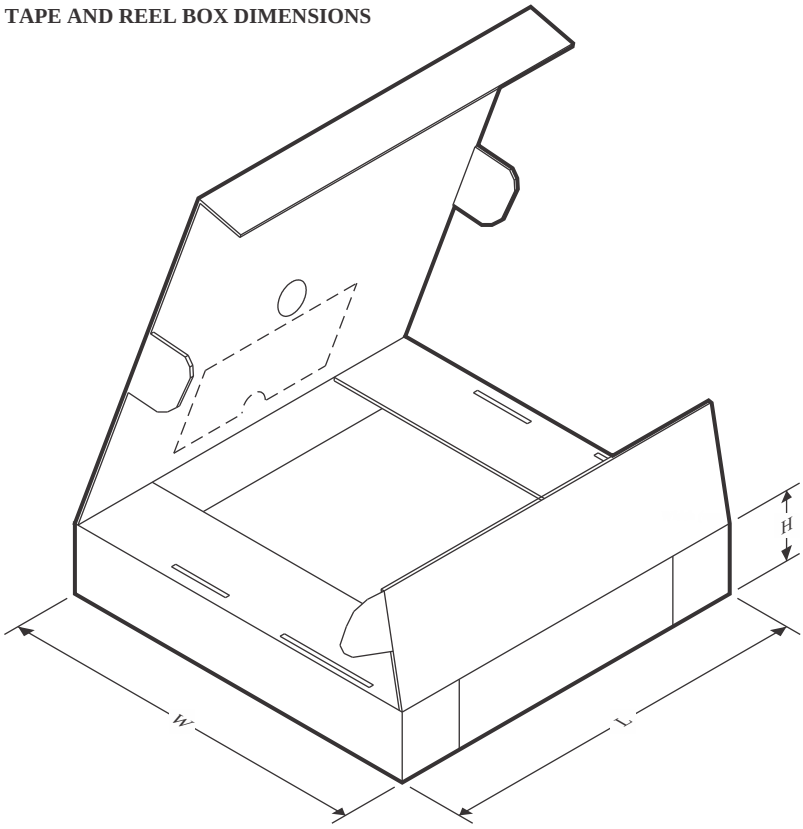

*All dimensions are nominal

Device	Package Type	Package Drawing	Pins	SPQ	Length (mm)	Width (mm)	Height (mm)
TMP512AIDR	SOIC	D	14	2500	353.0	353.0	32.0
TMP512AIRSAR	QFN	RSA	16	3000	346.0	346.0	33.0
TMP513AIDR	SOIC	D	16	2500	353.0	353.0	32.0
TMP513AIRSAR	QFN	RSA	16	3000	346.0	346.0	33.0
TMP513AIRSARG4	QFN	RSA	16	3000	346.0	346.0	33.0

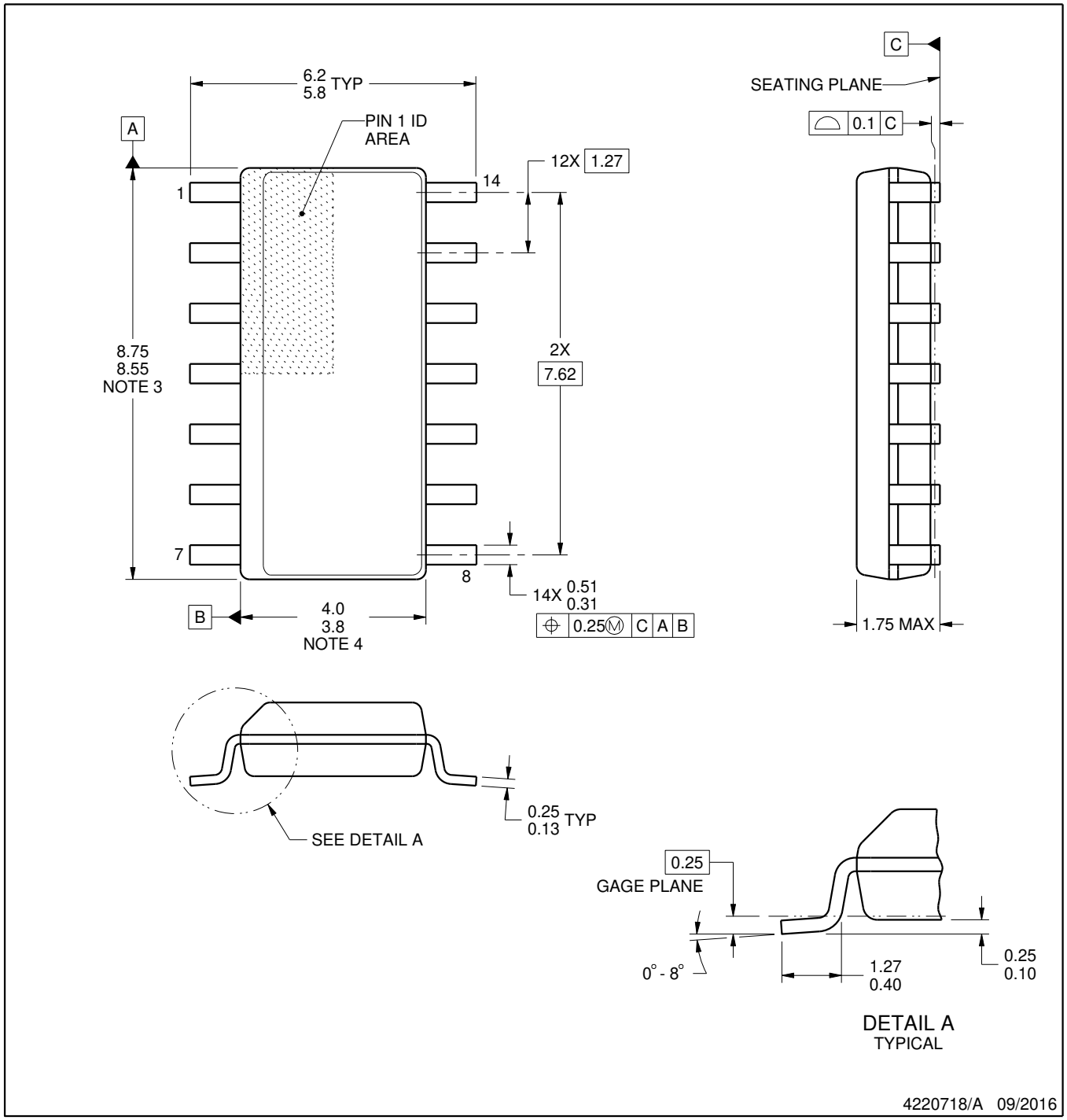

NOTES:

1. All linear dimensions are in millimeters. Dimensions in parenthesis are for reference only. Dimensioning and tolerancing per ASME Y14.5M.
2. This drawing is subject to change without notice.
3. This dimension does not include mold flash, protrusions, or gate burrs. Mold flash, protrusions, or gate burrs shall not exceed 0.15 mm, per side.
4. This dimension does not include interlead flash. Interlead flash shall not exceed 0.43 mm, per side.
5. Reference JEDEC registration MS-012, variation AB.

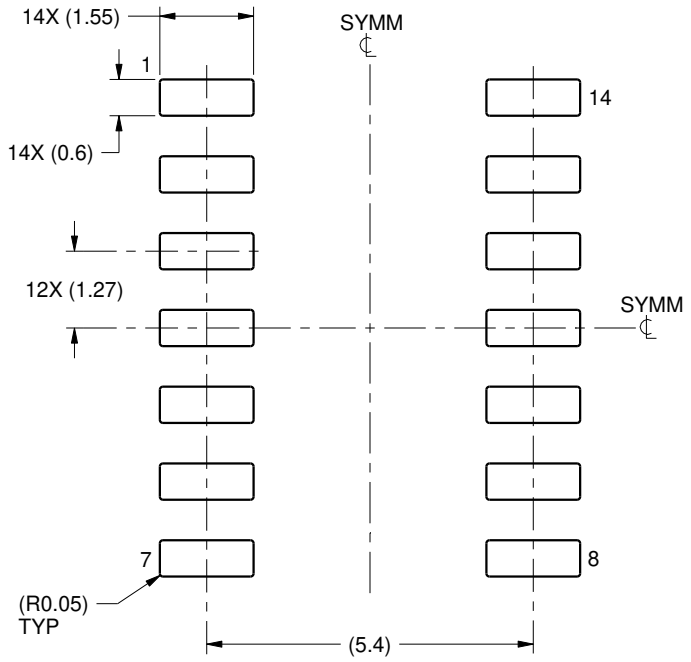

LAND PATTERN EXAMPLE
SCALE:8X

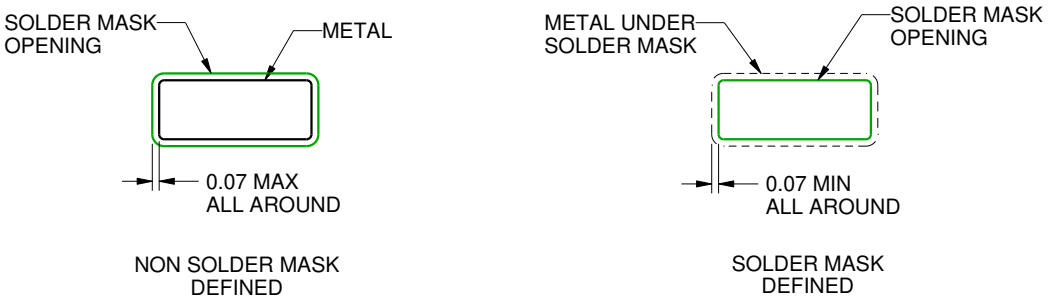

SOLDER MASK DETAILS

4220718/A 09/2016

NOTES: (continued)

6. Publication IPC-7351 may have alternate designs.
7. Solder mask tolerances between and around signal pads can vary based on board fabrication site.

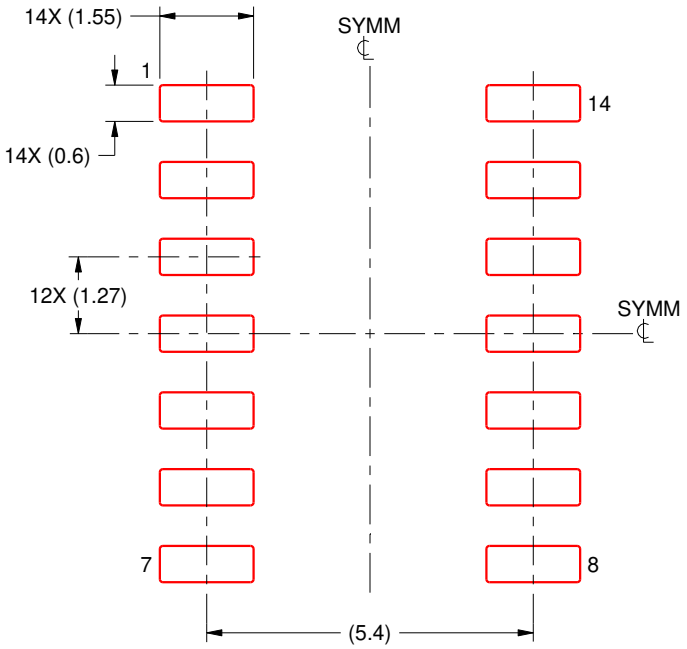

SOLDER PASTE EXAMPLE
BASED ON 0.125 mm THICK STENCIL
SCALE:8X

4220718/A 09/2016

NOTES: (continued)

8. Laser cutting apertures with trapezoidal walls and rounded corners may offer better paste release. IPC-7525 may have alternate design recommendations.
9. Board assembly site may have different recommendations for stencil design.

D (R–PDSO–G16) PLASTIC SMALL OUTLINE

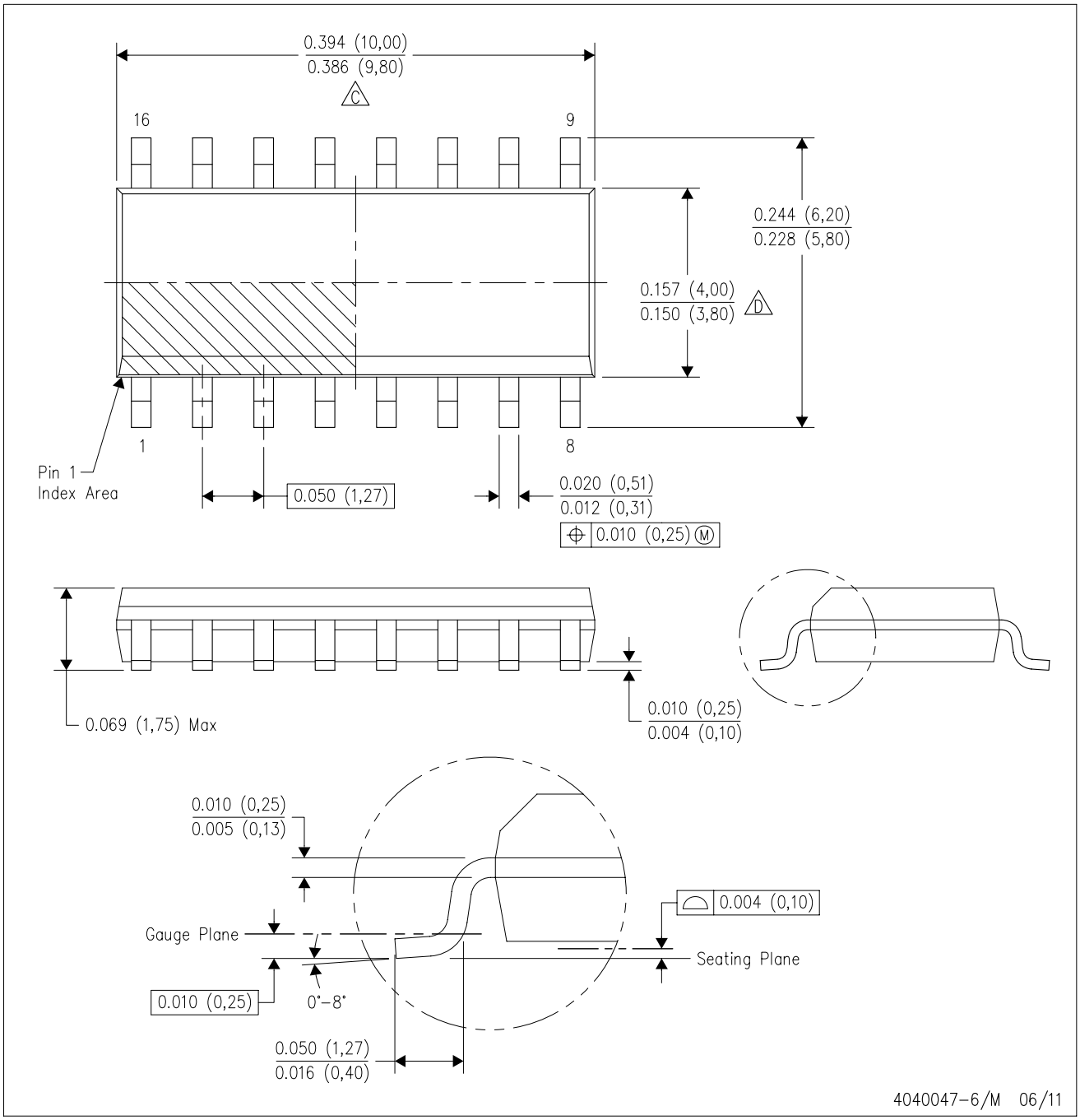

NOTES:
A. All linear dimensions are in inches (millimeters).
B. This drawing is subject to change without notice.
C. Body length does not include mold flash, protrusions, or gate burrs. Mold flash, protrusions, or gate burrs shall not exceed 0.006 (0,15) each side.
D. Body width does not include interlead flash. Interlead flash shall not exceed 0.017 (0,43) each side.
E. Reference JEDEC MS–012 variation AC.

GENERIC PACKAGE VIEW

RSA 16

VQFN - 1 mm max height

4 x 4, 0.65 mm pitch

PLASTIC QUAD FLATPACK - NO LEAD

This image is a representation of the package family, actual package may vary.
Refer to the product data sheet for package details.

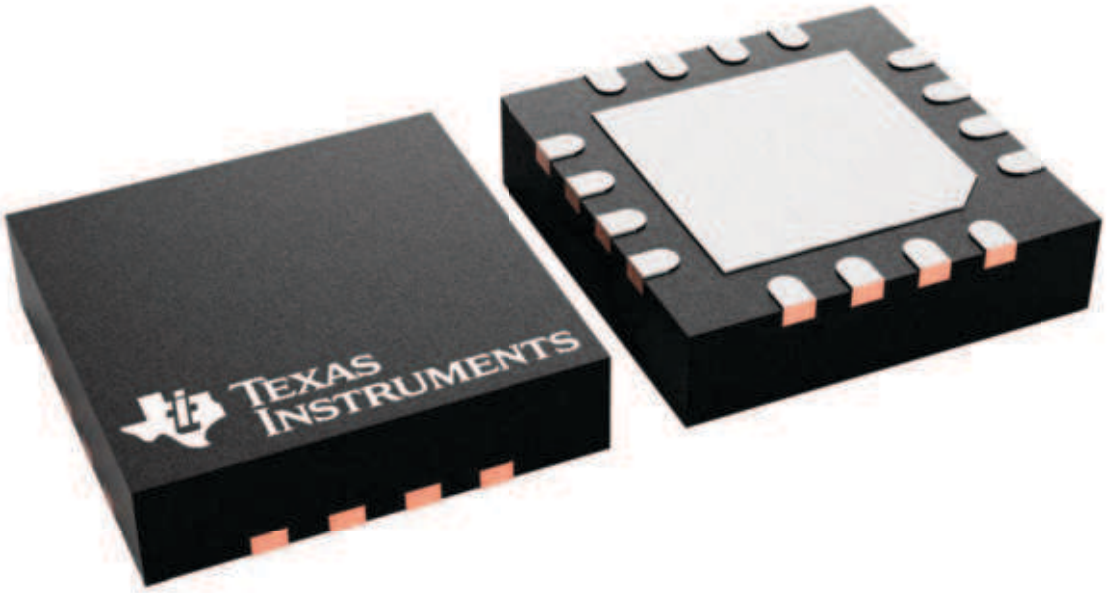

4230969/A

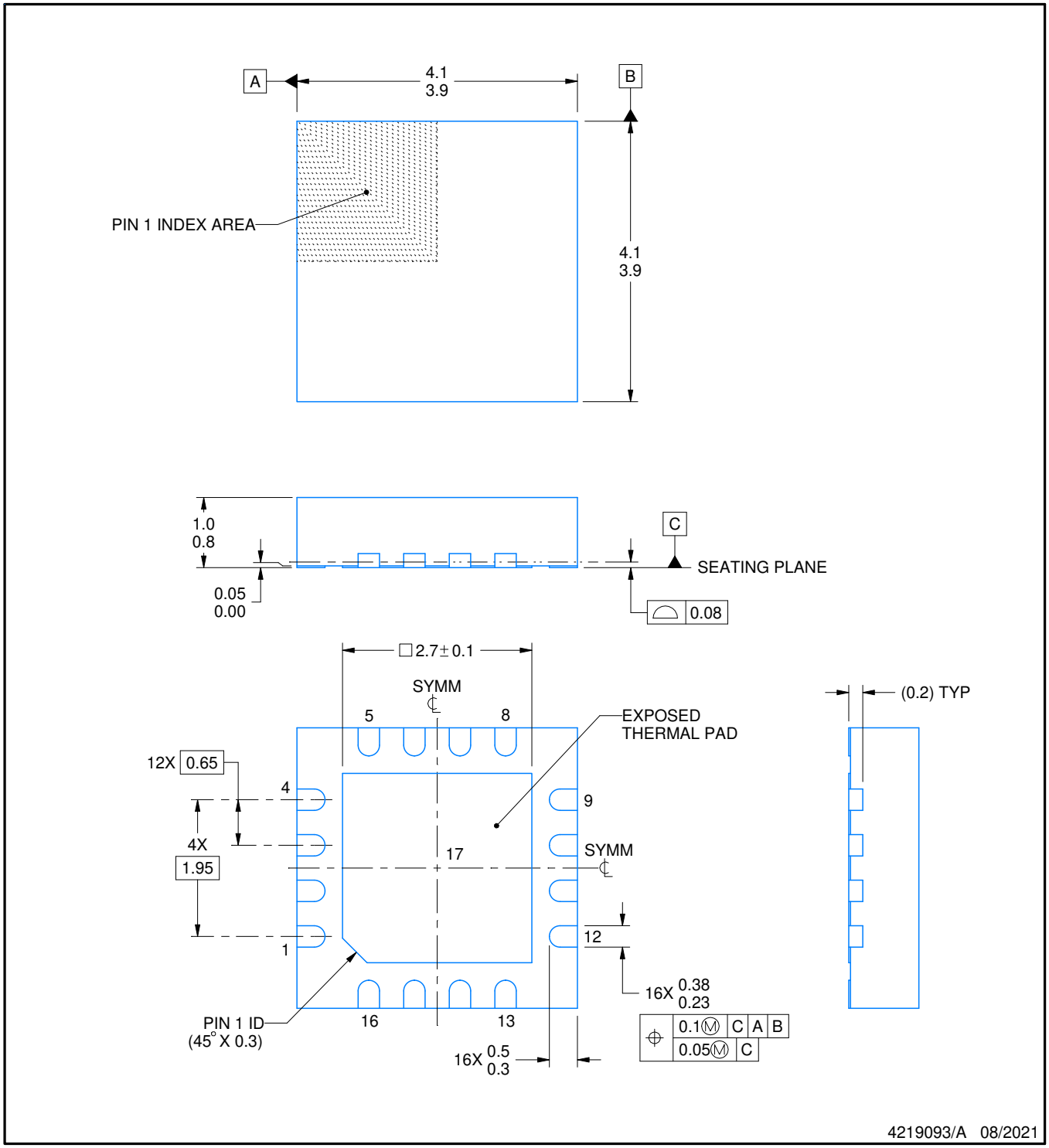

NOTES:

1. All linear dimensions are in millimeters. Any dimensions in parenthesis are for reference only. Dimensioning and tolerancing per ASME Y14.5M.
2. This drawing is subject to change without notice.
3. The package thermal pad must be soldered to the printed circuit board for thermal and mechanical performance.
4. Reference JEDEC registration MO-220.

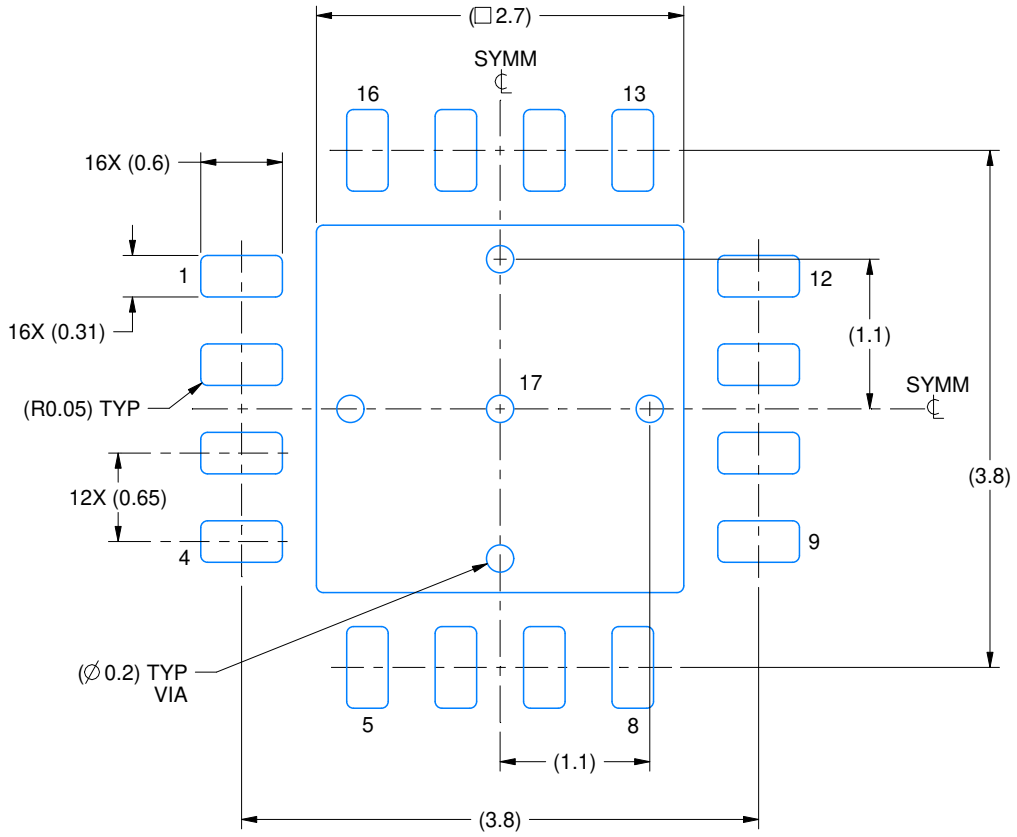

LAND PATTERN EXAMPLE
EXPOSED METAL SHOWN
SCALE:18X

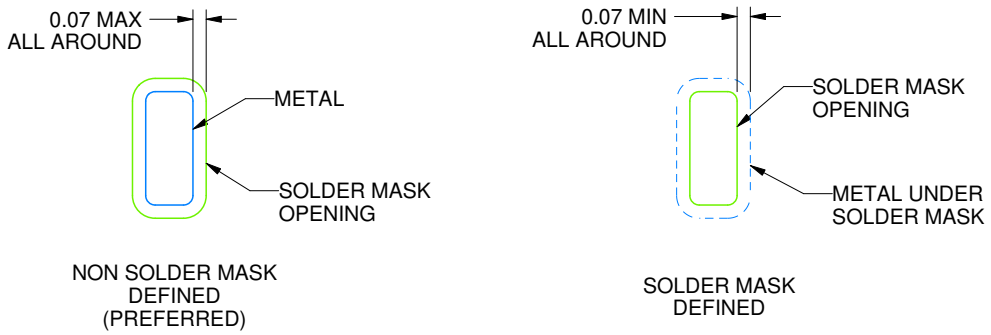

SOLDER MASK DETAILS

4219093/A 08/2021

NOTES: (continued)

5. This package is designed to be soldered to a thermal pad on the board. For more information, see Texas Instruments literature number SLUA271 (www.ti.com/lit/slua271).
6. Vias are optional depending on application, refer to device data sheet. If any vias are implemented, refer to their locations shown on this view. It is recommended that vias under paste be filled, plugged or tented.

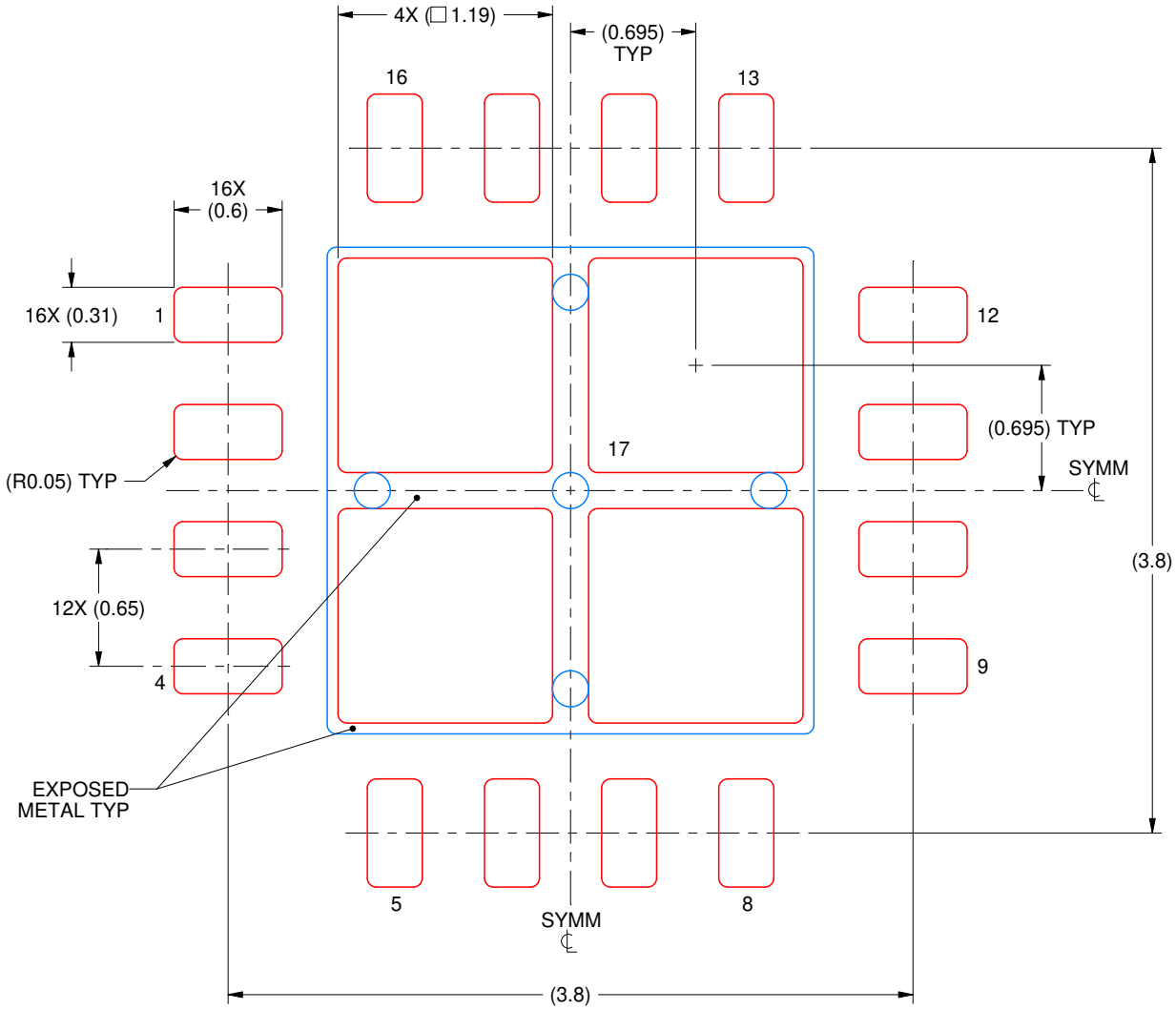

SOLDER PASTE EXAMPLE
BASED ON 0.125 mm THICK STENCIL

EXPOSED PAD
77% PRINTED SOLDER COVERAGE BY AREA
SCALE:25X

4219093/A 08/2021

NOTES: (continued)

7. Laser cutting apertures with trapezoidal walls and rounded corners may offer better paste release. IPC-7525 may have alternate design recommendations.

IMPORTANT NOTICE AND DISCLAIMER

TI PROVIDES TECHNICAL AND RELIABILITY DATA (INCLUDING DATASHEETS), DESIGN RESOURCES (INCLUDING REFERENCE DESIGNS), APPLICATION OR OTHER DESIGN ADVICE, WEB TOOLS, SAFETY INFORMATION, AND OTHER RESOURCES “AS IS” AND WITH ALL FAULTS, AND DISCLAIMS ALL WARRANTIES, EXPRESS AND IMPLIED, INCLUDING WITHOUT LIMITATION ANY IMPLIED WARRANTIES OF MERCHANTABILITY, FITNESS FOR A PARTICULAR PURPOSE OR NON-INFRINGEMENT OF THIRD PARTY INTELLECTUAL PROPERTY RIGHTS.

These resources are intended for skilled developers designing with TI products. You are solely responsible for (1) selecting the appropriate TI products for your application, (2) designing, validating and testing your application, and (3) ensuring your application meets applicable standards, and any other safety, security, regulatory or other requirements.

These resources are subject to change without notice. TI grants you permission to use these resources only for development of an application that uses the TI products described in the resource. Other reproduction and display of these resources is prohibited. No license is granted to any other TI intellectual property right or to any third party intellectual property right. TI disclaims responsibility for, and you fully indemnify TI and its representatives against any claims, damages, costs, losses, and liabilities arising out of your use of these resources.

TI’s products are provided subject to TI’s Terms of Sale, TI’s General Quality Guidelines, or other applicable terms available either on ti.com or provided in conjunction with such TI products. TI’s provision of these resources does not expand or otherwise alter TI’s applicable warranties or warranty disclaimers for TI products. Unless TI explicitly designates a product as custom or customer-specified, TI products are standard, catalog, general purpose devices.

TI objects to and rejects any additional or different terms you may propose.

Copyright © 2026, Texas Instruments Incorporated

Last updated 10/2025