Multicore Fixed and Floating-Point Digital Signal Processor

Check for Evaluation Modules (EVM): TMS320C6678

1 TMS320C6678 Features and Description

1.1 Features

- Eight TMS320C66x™ DSP Core Subsystems (C66x CorePacs), Each with
  - 1.0 GHz, 1.25 GHz, or 1.4 GHz C66x Fixed/Floating-Point CPU Core
    - 44.8 GMAC/Core for Fixed Point @ 1.4 GHz
    - 22.4 GFLOP/Core for Floating Point @ 1.4 GHz
  - Memory
    - 32K Byte L1P Per Core
    - 32K Byte L1D Per Core
    - 512K Byte Local L2 Per Core
- Multicore Shared Memory Controller (MSMC)
  - 4096KB MSM SRAM Memory Shared by Eight DSP C66x CorePacs
  - Memory Protection Unit for Both MSM SRAM and DDR3_EMIF
- Multicore Navigator
  - 8192 Multipurpose Hardware Queues with Queue Manager
  - Packet-Based DMA for Zero-Overhead Transfers
- Network Coprocessor
  - Packet Accelerator Enables Support for
    - Transport Plane IPsec, GTP-U, SCTP, PDCP
    - L2 User Plane PDCP (RoHC, Air Ciphering)
    - 1-Gbps Wire-Speed Throughput at 1.5 MPackets Per Second
  - Security Accelerator Engine Enables Support for
    - IPSec, SRTP, 3GPP, WiMAX Air Interface, and SSL/TLS Security
    - ECB, CBC, CTR, F8, A5/3, CCM, GCM, HMAC, CMAC, GMAC, AES, DES, 3DES, Kasumi, SNOW 3G, SHA-1, SHA-2 (256-bit Hash), MD5
    - Up to 2.8 Gbps Encryption Speed
- Peripherals
  - Four Lanes of SRIO 2.1
    - 1.24/2.5/3.125/5 GBaud Operation Supported Per Lane
    - Supports Direct I/O, Message Passing
    - Supports Four 1×, Two 2×, One 4×, and Two 1× + One 2× Link Configurations
  - PCIe Gen2
    - Single Port Supporting 1 or 2 Lanes
    - Supports Up To 5 GBaud Per Lane
  - HyperLink
    - Supports Connections to Other KeyStone Architecture Devices Providing Resource Scalability
    - Supports up to 50 Gbaud
  - Gigabit Ethernet (GbE) Switch Subsystem
    - Two SGMII Ports
    - Supports 10/100/1000 Mbps Operation
  - 64-Bit DDR3 Interface (DDR3-1600)
    - 8G Byte Addressable Memory Space
  - 16-Bit EMIF
  - Two Telecom Serial Ports (TSIP)
    - Supports 1024 DS0s Per TSIP
    - Supports 2/4/8 Lanes at 32.768/16.384/8.192 Mbps Per Lane
  - UART Interface
  - I^2C Interface
  - 16 GPIO Pins
  - SPI Interface
  - Semaphore Module
  - Sixteen 64-Bit Timers
  - Three On-Chip PLLs
- Commercial Temperature:
  - 0°C to 85°C
- Extended Temperature:
  - -40°C to 100°C

An IMPORTANT NOTICE at the end of this data sheet addresses availability, warranty, changes, use in safety-critical applications, intellectual property matters and other important disclaimers. PRODUCTION DATA.

1.2 Applications

- Mission-Critical Systems
- High-Performance Computing Systems
- Communications
- Audio
- Video Infrastructure
- Imaging
- Analytics
- Networking
- Media Processing
- Industrial Automation
- Automation and Process Control

1.3 KeyStone Architecture

TI's KeyStone Multicore Architecture provides a high-performance structure for integrating RISC and DSP cores with application-specific coprocessors and I/O. KeyStone is the first of its kind that provides adequate internal bandwidth for nonblocking access to all processing cores, peripherals, coprocessors, and I/O. This is achieved with four main hardware elements: Multicore Navigator, TeraNet, Multicore Shared Memory Controller, and HyperLink.

Multicore Navigator is an innovative packet-based manager that controls 8192 queues. When tasks are allocated to the queues, Multicore Navigator provides hardware-accelerated dispatch that directs tasks to the appropriate available hardware. The packet-based system on a chip (SoC) uses the two Tbps capacity of the TeraNet switched central resource to move packets. The Multicore Shared Memory Controller enables processing cores to access shared memory directly without drawing from TeraNet's capacity, so packet movement cannot be blocked by memory access.

HyperLink provides a 50-Gbaud chip-level interconnect that allows SoCs to work in tandem. Its low-protocol overhead and high throughput make HyperLink an ideal interface for chip-to-chip interconnections. Working with Multicore Navigator, HyperLink dispatches tasks to tandem devices transparently and executes tasks as if they are running on local resources.

1.4 Device Description

The TMS320C6678 DSP is a highest-performance fixed/floating-point DSP that is based on TI's KeyStone multicore architecture. Incorporating the new and innovative C66x DSP core, this device can run at a core speed of up to 1.4 GHz. For developers of a broad range of applications, such as mission-critical systems, medical imaging, test and automation, and other applications requiring high performance, TI's TMS320C6678 DSP offers 11.2 GHz cumulative DSP and enables a platform that is power-efficient and easy to use. In addition, it is fully backward compatible with all existing C6000 family fixed and floating point DSPs.

TI's KeyStone architecture provides a programmable platform integrating various subsystems (C66x cores, memory subsystem, peripherals, and accelerators) and uses several innovative components and techniques to maximize intra-device and inter-device communication that allows the various DSP resources to operate efficiently and seamlessly. Central to this architecture are key components such as Multicore Navigator that allows for efficient data management between the various device components. The TeraNet is a non-blocking switch fabric enabling fast and contention-free internal data movement. The multicore shared memory controller allows access to shared and external memory directly without drawing from switch fabric capacity.

Copyright 2014 Texas Instruments Incorporated

For fixed-point use, the C66x core has 4× the multiply accumulate (MAC) capability of C64x+ cores. In addition, the C66x core integrates floating point capability and the per-core raw computational performance in an industry-leading 44.8 GMACS/core and 22.4 GFLOPS/core (@1.4 GHz operating frequency). It can execute 8 single-precision floating point MAC operations per cycle and can perform double- and mixed-precision operations, and is IEEE754 compliant. The C66x core incorporates 90 new instructions (compared to the C64x+ core) targeted for floating point and vector math oriented processing. These enhancements yield sizeable performance improvements in popular DSP kernels used in signal processing, mathematical, and image acquisition functions. The C66x core is backwards code-compatible with TI's previous generation C6000 fixed and floating point DSP cores, ensuring software portability and shortened software development cycles for applications migrating to faster hardware.

The C6678 DSP integrates a large amount of on-chip memory. In addition to 32KB of L1 program and data cache, there is 512KB of dedicated memory per core that can be configured as mapped RAM or cache. The device also integrates 4096KB of Multicore Shared Memory that can be used as a shared L2 SRAM and/or shared L3 SRAM. All L2 memories incorporate error detection and error correction. For fast access to external memory, this device includes a 64-bit DDR-3 external memory interface (EMIF) running at 1600 MHz and has ECC DRAM support.

This family supports a plethora of high speed standard interfaces including RapidIO ver 2, PCI Express Gen2, and Gigabit Ethernet, as well as an integrated Ethernet switch. It also includes I^2C, UART, Telecom Serial Interface Port (TSIP), and a 16-bit EMIF, along with general purpose CMOS IO. For high throughput, low latency communication between devices or with an FPGA, this device also sports a 50-Gbaud full-duplex interface called HyperLink. Adding to the network awareness of this device is a network co-processor that includes both packet and optional security acceleration. The packet accelerator can process up to 1.5 M packets/s and enables a single IP address to be used for the entire multicore C6678 device. It also provides L2 to L4 classification, along with checksum and QoS capabilities.

The C6678 device has a complete set of development tools, which includes: an enhanced C compiler, an assembly optimizer to simplify programming and scheduling, and a Windows® debugger interface for visibility into source code execution.

Copyright 2014 Texas Instruments Incorporated

1.5 Functional Block Diagram

Figure 1-1 shows the functional block diagram of the TMS320C6678 device.

Figure 1-1 Functional Block Diagram

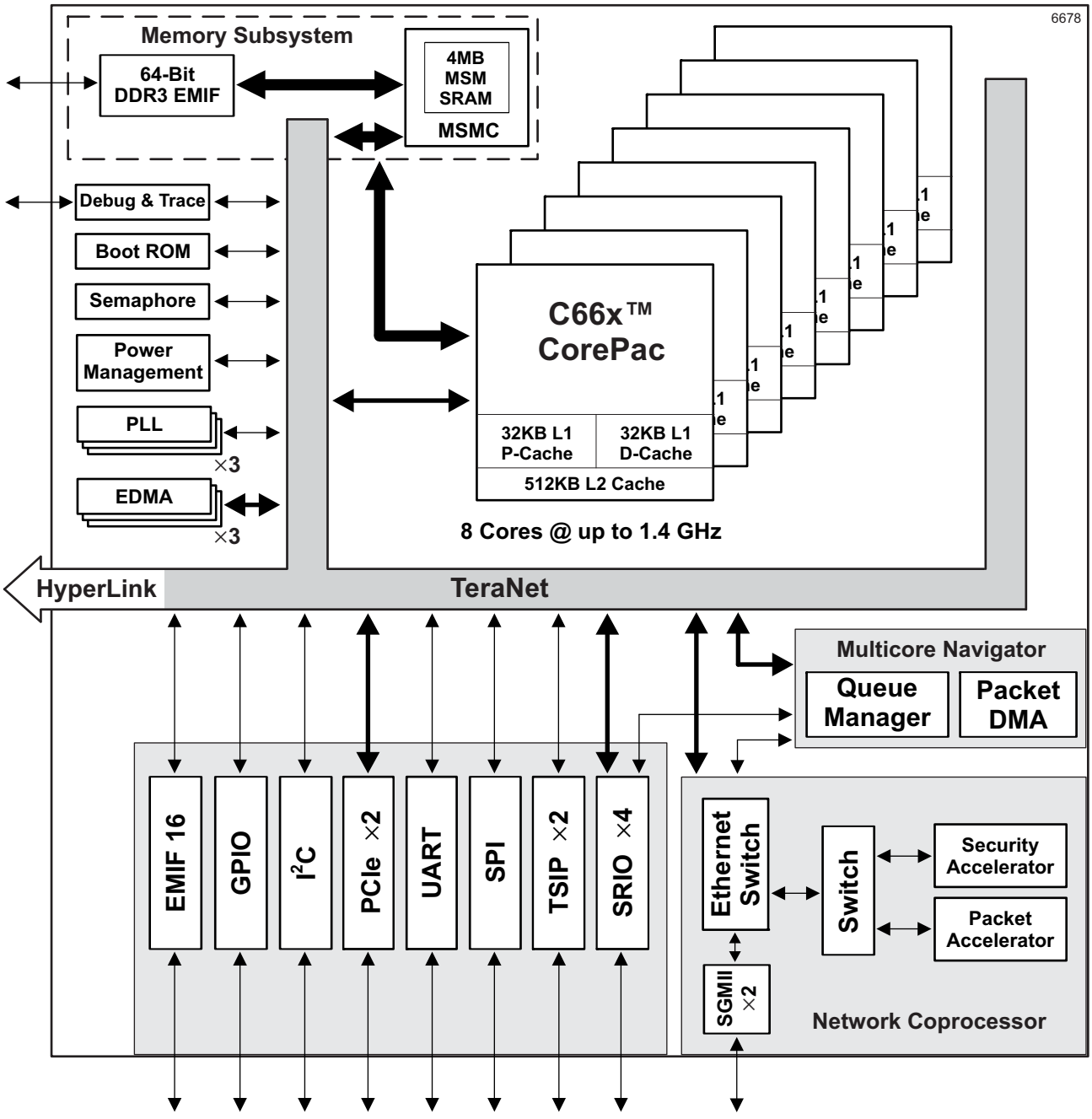

Copyright 2014 Texas Instruments Incorporated

1.6 Release History

Revision	Date	Description/Comments
SPRS691E	March 2014	• Added 1.4-GHz support • Added GYP package support • Added DSP_SUSP_CTL register section • Updated Core Before IO Power Sequencing diagram, changing clock signal SYSCLK1P&N to REFCLK1P&N • Updated the Trace timing diagram • Updated Parameter Table Index bit field in I^2C boot configuration • Updated PKTDMA_PRI_ALLOC register to be CHIP_MSIC_CTL register with new bit field added. • Updated OUTPUT_DIVIDE default value and PLL clock formula in PLL Settings section • Updated Chip Select field description in SPI boot device configuration table • Corrections applied to EMIF16 Boot Device Configuration Bit Fields • Restored Parameter Information section
SPRS691D	April 2013	• Added Initial Startup row for CVDD in Recommended Operating Conditions table • Added DDR3PLLCTL1 and PASSPLLCTL1 registers to Device Status Control Registers table • Added CVDD and SmartReflex voltage parameter in SmartReflex switching table • Added HOUT timing diagram in Host Interrupt Output section • Added MPU Registers Reset Values section • Corrected PASSCLK(N/P) max cycle time from 6.4 ns to 25 ns • Corrected *Reserved* to be *Assert local reset to all CorePacs* in LRESET and NMI decoding table • Corrected PASS PLL clock to SRIOSGMIICLK in the boot device values table for Ethernet. • Updated the Timer numbering across the whole document • Updated DDR3 PLL initialization sequence
SPRS691C	February 2012	• Added TeraNet connection figures and added bridge numbers to the connection tables • Changed TPCC to EDMA3CC and TPTC to EDMA3TC • Changed chip level interrupt controller name from INTC to CIC • Added the DDR3 PLL and PASS PLL Initialization Sequence • Added DEVSPEED Register section • Updated device frequency in the feature section • Corrected the SPI, DDR3, and Hyperbridge config/data memory map addresses • Restricted Output Divide of SECCTL Register to max value of divide by 2
SPRS691B	August 2011	• Updated the timing and electrical sections of several peripherals • Updated the core-specific and general-purpose timer numbers • Updated the connection matrix tables in chapter 4 “System Interconnection” • Updated device boot configuration tables and figures • Updated DDR3 and PASS PLL timing figures • Removed section 7.1 “Parameter Information”
SPRS691A	July 2011	• Added sections: NMI and LRSET • Added Pin Map diagrams • Added MAINPLLCTL1, DDR3PLLCTL1 and PAPLLCTL1 registers • Changed PLL diagrams of MAIN PLL, DDR3 PLL and PASS PLL • Changed C66x DSP System PLL Configuration table to include 1000 MHz and 1250 MHz columns • Corrected items in the Memory Map Summary table • Changed all occurrences of PA_SS to Network Coprocessor • Updated the complete Power-up sequencing section. RESETFULL must always de-assert after POR
SPRS691	November 2010	Initial release

For detailed revision information, see “Revision History” on page 236.

Copyright 2014 Texas Instruments Incorporated

Contents

1 TMS320C6678 Features and Description 1
1.1 Features 1
1.2 Applications 2
1.3 KeyStone Architecture 2
1.4 Device Description 2
1.5 Functional Block Diagram 4
1.6 Release History 5
2 Device Overview 13
2.1 Device Characteristics 13
2.2 DSP Core Description 14
2.3 Memory Map Summary 17
2.4 Boot Sequence 23
2.5 Boot Modes Supported and PLL Settings 24
2.5.1 Boot Device Field 25
2.5.2 Device Configuration Field 26
2.5.3 Boot Parameter Table 31
2.5.4 PLL Boot Configuration Settings 38
2.6 Second-Level Bootloaders 38
2.7 Terminals 39
2.7.1 Package Terminals 39
2.7.2 Pin Map 39
2.8 Terminal Functions 44
2.9 Development and Support 70
2.9.1 Development Support 70
2.9.2 Device Support 70
2.10 Related Documentation from Texas Instruments 72
3 Device Configuration 73
3.1 Device Configuration at Device Reset 73
3.2 Peripheral Selection After Device Reset 74
3.3 Device State Control Registers 74
3.3.1 Device Status Register 78
3.3.2 Device Configuration Register (DEVCFG) 79
3.3.3 JTAG ID Register (JTAGID) Description 79
3.3.4 Kicker Mechanism Register (KICK0 and KICK1) 80
3.3.5 DSP Boot Address Register (DSP_BOOT_ADDRn) 80
3.3.6 LRESETNMI PIN Status Register (LRSTNMIPINSTAT) 80
3.3.7 LRESETNMI PIN Status Clear Register (LRSTNMIPINSTAT_CLR) 81
3.3.8 Reset Status Register (RESET_STAT) 83
3.3.9 Reset Status Clear Register (RESET_STAT_CLR) 84
3.3.10 Boot Complete Register (BOOTCOMPLETE) 85
3.3.11 Power State Control Register (PWRSTATECTL) 86
3.3.12 NMI Event Generation to CorePac Register (NMIGRx) 86
3.3.13 IPC Generation Registers (IPCGRx) 87
3.3.14 IPC Acknowledgement Registers (IPCARx) 88
3.3.15 IPC Generation Host Register (IPCGRH) 88
3.3.16 IPC Acknowledgement Host Register (IPCARH) 89
3.3.17 Timer Input Selection Register (TINPSEL) 90
3.3.18 Timer Output Selection Register (TOUTPSEL) 93
3.3.19 Reset Mux Register (RSTMUXx) 94
3.3.20 DSP Suspension Control Register (DSP_SUSP_CTL) 95
3.3.21 Device Speed Register (DEVSPEED) 96
3.3.22 Chip Miscellaneous Control Register (CHIP_MISC_CTL) 96
3.4 Pullup/Pulldown Resistors 97
4 System Interconnect 98
4.1 Internal Buses and Switch Fabrics 98
4.2 Switch Fabric Connections 99
4.3 Bus Priorities 107
5 C66x CorePac 108
5.1 Memory Architecture 109
5.1.1 L1P Memory 109
5.1.2 L1D Memory 110
5.1.3 L2 Memory 111
5.1.4 MSM SRAM 112
5.1.5 L3 Memory 112
5.2 Memory Protection 113
5.3 Bandwidth Management 114
5.4 Power-Down Control 114
5.5 C66x CorePac Revision 115
5.6 C66x CorePac Register Descriptions 115
6 Device Operating Conditions 116
6.1 Absolute Maximum Ratings 116
6.2 Recommended Operating Conditions 117
6.3 Electrical Characteristics 118
6.4 Power Supply to Peripheral I/O Mapping 119
7 Peripheral Information and Electrical Specifications 120
7.1 Parameter Information 120
7.1.1 Timing Parameters and Board Routing Analysis 120
7.1.2 1.8-V LVCMOS Signal Transition Levels 120
7.2 Recommended Clock and Control Signal Transition Behavior 120
7.3 Power Supplies 121
7.3.1 Power-Supply Sequencing 122
7.3.2 Power-Down Sequence 127
7.3.3 Power Supply Decoupling and Bulk Capacitors 127
7.3.4 SmartReflex 128
7.4 Power Sleep Controller (PSC) 129
7.4.1 Power Domains 129
7.4.2 Clock Domains 130
7.4.3 PSC Register Memory Map 131
7.5 Reset Controller 133
7.5.1 Power-on Reset 134
7.5.2 Hard Reset 135
7.5.3 Soft Reset 136
7.5.4 Local Reset 137
7.5.5 Reset Priority 137
7.5.6 Reset Controller Register 137
7.5.7 Reset Electrical Data / Timing 138
7.6 Main PLL and PLL Controller 140

Copyright 2014 Texas Instruments Incorporated

7.6.1 Main PLL Controller Device-Specific Information 141
7.6.2 PLL Controller Memory Map 143
7.6.3 Main PLL Control Register 150
7.6.4 Main PLL and PLL Controller Initialization Sequence 151
7.6.5 Main PLL Controller/SRIO/HyperLink/PCIe Clock Input Electrical Data/Timing 151
7.7 DD3 PLL 153
7.7.1 DDR3 PLL Control Register 153
7.7.2 DDR3 PLL Device-Specific Information 154
7.7.3 DDR3 PLL Initialization Sequence 154
7.7.4 DDR3 PLL Input Clock Electrical Data/Timing 155
7.8 PASS PLL 156
7.8.1 PASS PLL Control Register 156
7.8.2 PASS PLL Device-Specific Information 157
7.8.3 PASS PLL Initialization Sequence 157
7.8.4 PASS PLL Input Clock Electrical Data/Timing 158
7.9 Enhanced Direct Memory Access (EDMA3) Controller 159
7.9.1 EDMA3 Device-Specific Information 160
7.9.2 EDMA3 Channel Controller Configuration 160
7.9.3 EDMA3 Transfer Controller Configuration 160
7.9.4 EDMA3 Channel Synchronization Events 161
7.10 Interrupts 165
7.10.1 Interrupt Sources and Interrupt Controller 165
7.10.2 CIC Registers 183
7.10.3 Inter-Processor Register Map 188
7.10.4 $\overline{\text{NMI}}$ and $\overline{\text{LRESET}}$ 189
7.10.5 External Interrupts Electrical Data/Timing 190
7.10.6 Host Interrupt Output 191
7.11 Memory Protection Unit (MPU) 192
7.11.1 MPU Registers 195
7.11.2 MPU Programmable Range Registers 200
7.12 DDR3 Memory Controller 205
7.12.1 DDR3 Memory Controller Device-Specific Information 205
7.12.2 DDR3 Memory Controller Race Condition Consideration 205
7.12.3 DDR3 Memory Controller Electrical Data/Timing 206
7.13 I^2C Peripheral 207
7.13.1 I^2C Device-Specific Information 207
7.13.2 I^2C Peripheral Register Description(s) 208
7.13.3 I^2C Electrical Data/Timing 209
7.14 SPI Peripheral 212
7.14.1 SPI Electrical Data/Timing 212
7.15 HyperLink Peripheral 215
7.15.1 HyperLink Device-Specific Interrupt Event 215
7.15.2 HyperLink Electrical Data/Timing 217
7.16 UART Peripheral 219
7.17 PCIe Peripheral 220
7.18 TSIP Peripheral 221
7.18.1 TSIP Electrical Data/Timing 221
7.19 EMIF16 Peripheral 223
7.19.1 EMIF16 Electrical Data/Timing 223
7.20 Packet Accelerator 225
7.21 Security Accelerator 225
7.22 Gigabit Ethernet (GbE) Switch Subsystem 226
7.23 Management Data Input/Output (MDIO) 228
7.24 Timers 229
7.24.1 Timers Device-Specific Information 229
7.24.2 Timers Electrical Data/Timing 230
7.25 Serial RapidIO (SRIO) Port 230
7.26 General-Purpose Input/Output (GPIO) 231
7.26.1 GPIO Device-Specific Information 231
7.26.2 GPIO Electrical Data/Timing 231
7.27 Semaphore2 232
7.28 Emulation Features and Capability 232
7.28.1 Advanced Event Triggering (AET) 232
7.28.2 Trace 233
7.28.3 IEEE 1149.1 JTAG 234
8 Revision History 236
9 Mechanical Data 241
9.1 Thermal Data 241
9.2 Packaging Information 241

Copyright 2014 Texas Instruments Incorporated

List of Figures

Figure 1-1 Functional Block Diagram 4
Figure 2-1 DSP Core Data Paths 16
Figure 2-2 Boot Mode Pin Decoding 24
Figure 2-3 No Boot/ EMIF16 Configuration Fields.... 26
Figure 2-4 Serial Rapid I/O Device Configuration Fields.... 26
Figure 2-5 Ethernet (SGMII) Device Configuration Fields... 27
Figure 2-6 PCI Device Configuration Fields.... 27
Figure 2-7 I2C Master Mode Device Configuration Bit Fields.... 28
Figure 2-8 I2C Passive Mode Device Configuration Bit Fields.... 29
Figure 2-9 SPI Device Configuration Bit Fields.... 29
Figure 2-10 HyperLink Boot Device Configuration Fields.... 30
Figure 2-11 CYP 841-Pin BGA Package (Bottom View).... 39
Figure 2-12 Pin Map Quadrants (Bottom View) 39
Figure 2-13 Upper Left Quadrant—A (Bottom View).... 40
Figure 2-14 Upper Right Quadrant—B (Bottom View) 41
Figure 2-15 Lower Right Quadrant—C (Bottom View) 42
Figure 2-16 Lower Left Quadrant—D (Bottom View).... 43
Figure 2-17 C66x DSP Device Nomenclature (including the TMS320C6678) 71
Figure 3-1 Device Status Register.... 78
Figure 3-2 Device Configuration Register (DEVCFG) 79
Figure 3-3 JTAG ID Register (JTAGID) 79
Figure 3-4 DSP BOOT Address Register (DSP_BOOT_ADDRn) 80
Figure 3-5 LRESETNMI PIN Status Register (LRSTNMIPINSTAT) 80
Figure 3-6 LRESETNMI PIN Status Clear Register (LRSTNMIPINSTAT_CLR) 81
Figure 3-7 Reset Status Register (RESET_STAT) 83
Figure 3-8 Reset Status Clear Register (RESET_STAT_CLR).. 84
Figure 3-9 Boot Complete Register (BOOTCOMPLETE).... 85
Figure 3-10 Power State Control Register (PWRSTATECTL) .. 86
Figure 3-11 NMI Generation Register (NMIGRx).... 86
Figure 3-12 IPC Generation (IPCGRx) Registers 87
Figure 3-13 IPC Acknowledgement (IPCARx) Registers.... 88
Figure 3-14 IPC Generation (IPCGRH) Registers.... 88
Figure 3-15 IPC Acknowledgement Register (IPCARH) 89
Figure 3-16 Timer Input Selection Register (TINPSEL) 90
Figure 3-17 Timer Output Selection Register (TOUTPSEL) 93
Figure 3-18 Reset Mux Register (RSTMUXx).... 94
Figure 3-19 DSP Suspension Control Register (DSP_SUSP_CTL) 95
Figure 3-20 Device Speed Register (DEVSPEED) 96
Figure 3-21 Chip Miscellaneous Control Register (CHIP_MISC_CTL).... 96
Figure 4-1 TeraNet 2A for C6678.... 99
Figure 4-2 TeraNet 3A for C6678.... 100
Figure 4-3 TeraNet 3P_A & B for C6678 102
Figure 4-4 TeraNet 6P_B and 3P_Tracer for C6678.... 103
Figure 5-1 C66x CorePac Block Diagram 108
Figure 5-2 L1P Memory Configurations....109
Figure 5-3 L1D Memory Configurations 110
Figure 5-4 L2 Memory Configurations 111
Figure 5-5 CorePac Revision ID Register (MM_REVID) Address - 0181 2000h 115
Figure 7-1 Input and Output Voltage Reference Levels for AC Timing Measurements....120
Figure 7-2 Rise and Fall Transition Time Voltage Reference Levels 120
Figure 7-3 Core Before IO Power Sequencing 123
Figure 7-4 IO Before Core Power Sequencing 125
Figure 7-5 SmartReflex 4-Pin VID Interface Timing 128
Figure 7-6 RESETFULL Reset Timing 138
Figure 7-7 Soft/Hard-Reset Timing 138
Figure 7-8 Boot Configuration Timing 139
Figure 7-9 Main PLL and PLL Controller 140
Figure 7-10 PLL Secondary Control Register (SECCTL)) 144
Figure 7-11 PLL Controller Divider Register (PLLDIVn) 145
Figure 7-12 PLL Controller Clock Align Control Register (ALNCTL) 145
Figure 7-13 PLLDIV Divider Ratio Change Status Register (DCHANGE)....146
Figure 7-14 SYSCLK Status Register (SYSTAT) 146
Figure 7-15 Reset Type Status Register (RSTYPE) 147
Figure 7-16 Reset Control Register (RSTCTRL) 148
Figure 7-17 Reset Configuration Register (RSTCFG).....148
Figure 7-18 Reset Isolation Register (RSISO)....149
Figure 7-19 Main PLL Control Register 0 (MAINPLLCTL0) ...150
Figure 7-20 Main PLL Control Register 1 (MAINPLLCTL1) ...150
Figure 7-21 Main PLL Controller/SRIO/HyperLink/PCIe Clock Input Timing....152
Figure 7-22 Main PLL Clock Input Transition Time 152
Figure 7-23 DDR3 PLL Block Diagram....153
Figure 7-24 DDR3 PLL Control Register 0 (DDR3PLLCTL0)...153
Figure 7-25 DDR3 PLL Control Register 1 (DDR3PLLCTL1)...154
Figure 7-26 DDR3 PLL DDRCLK Timing.....155
Figure 7-27 PASS PLL Block Diagram 156
Figure 7-28 PASS PLL Control Register 0 (PASSPLLCTL0)....156
Figure 7-29 PASS PLL Control Register 1 (PASSPLLCTL1)....157
Figure 7-30 PASS PLL Timing....158
Figure 7-31 TMS320C6678 Interrupt Topology....166
Figure 7-32 TMS320C6678 System Event Inputs — C66x CorePac Primary Interrupts 167
Figure 7-33 NMI and Local Reset Timing....190
Figure 7-34 HOUT Timing....191
Figure 7-35 Configuration Register (CONFIG) 199
Figure 7-36 Programmable Range n Start Address Register (PROGn_MPSAR) 200
Figure 7-37 Programmable Range n End Address Register (PROGn_MPEAR) 200
Figure 7-38 Programmable Range n Memory Protection Page Attribute Register (PROGn_MPPA) 201
Figure 7-39 I2C Module Block Diagram.....208
Figure 7-40 I2C Receive Timings....210

Copyright 2014 Texas Instruments Incorporated

Figure 7-41 I^2C Transmit Timings 211
Figure 7-42 SPI Master Mode Timing Diagrams — Base Timings for 3 Pin Mode 214
Figure 7-43 SPI Additional Timings for 4 Pin Master Mode with Chip Select Option 214
Figure 7-44 HyperLink Station Management Clock Timing 218
Figure 7-45 HyperLink Station Management Transmit Timing 218
Figure 7-46 HyperLink Station Management Receive Timing 218
Figure 7-47 UART Receive Timing Waveform 219
Figure 7-48 UART CTS (Clear-to-Send Input) — Autoflow Timing Waveform 219
Figure 7-49 UART Transmit Timing Waveform 220
Figure 7-50 UART RTS (Request-to-Send Output) — Autoflow Timing Waveform 220
Figure 7-51 TSIP 2x Timing Diagram(1) 221
Figure 7-52 TSIP 1x Timing Diagram(1) 222
Figure 7-53 EMIF16 Asynchronous Memory Read Timing Diagram 224
Figure 7-54 EMIF16 Asynchronous Memory Write Timing Diagram 224
Figure 7-55 EMIF16 EM_WAIT Read Timing Diagram 225
Figure 7-56 EMIF16 EM_WAIT Write Timing Diagram 225
Figure 7-57 MACID1 Register 226
Figure 7-58 MACID2 Register 226
Figure 7-59 CPTS_RFTCLK_SEL Register 227
Figure 7-60 MDIO Input Timing 228
Figure 7-61 MDIO Output Timing 228
Figure 7-62 Timer Timing 230
Figure 7-63 GPIO Timing 231
Figure 7-64 Trace Timing 233
Figure 7-65 JTAG Test-Port Timing 235

Copyright 2014 Texas Instruments Incorporated

List of Tables

Table 2-1 Device Characteristics 13
Table 2-2 Memory Map Summary..... 17
Table 2-3 Bootloader section in L2 SRAM 23
Table 2-4 Boot Mode Pins: Boot Device Values 25
Table 2-5 Extended Boot Modes..... 25
Table 2-6 No Boot / EMIF16 Configuration Field Descriptions 26
Table 2-7 Serial Rapid I/O Configuration Field Descriptions 26
Table 2-8 Ethernet (SGMII) Configuration Field Descriptions 27
Table 2-9 PCI Device Configuration Field Descriptions.... 27
Table 2-10 BAR Config / PCIe Window Sizes 28
Table 2-11 I2C Master Mode Device Configuration Field Descriptions 28
Table 2-12 I2C Passive Mode Device Configuration Field Descriptions 29
Table 2-13 SPI Device Configuration Field Descriptions.... 29
Table 2-14 HyperLink Boot Device Configuration Field Descriptions 30
Table 2-15 Boot Parameter Table Common Parameters.... 31
Table 2-16 EMIF16 Boot Mode Parameter Table 31
Table 2-17 SRIO Boot Mode Parameter Table..... 32
Table 2-18 Ethernet Boot Mode Parameter Table 32
Table 2-19 PCIe Boot Mode Parameter Table 34
Table 2-20 I2C Boot Mode Parameter Table..... 34
Table 2-21 SPI Boot Mode Parameter Table..... 35
Table 2-22 HyperLink Boot Mode Parameter Table 36
Table 2-23 DDR3 Boot Parameter Table 37
Table 2-24 C66x DSP System PLL Configuration 38
Table 2-25 I/O Functional Symbol Definitions 44
Table 2-26 Terminal Functions — Signals and Control by Function 44
Table 2-27 Terminal Functions — Power and Ground..... 57
Table 2-28 Terminal Functions — By Signal Name..... 58
Table 2-29 Terminal Functions — By Ball Number 63
Table 3-1 TMS320C6678 Device Configuration Pins 73
Table 3-2 Device State Control Registers..... 74
Table 3-3 Device Status Register Field Descriptions..... 78
Table 3-4 Device Configuration Register (DEVCFG) Field Descriptions 79
Table 3-5 JTAG ID Register (JTAGID) Field Descriptions ... 79
Table 3-6 DSP BOOT Address Register (DSP_BOOT_ADDRn) Field Descriptions..... 80
Table 3-7 LRESETNMI PIN Status Register (LRSTNMIPINSTAT) Field Descriptions 81
Table 3-8 LRESETNMI PIN Status Clear Register (LRSTNMIPINSTAT_CLR) Field Descriptions 81
Table 3-9 Reset Status Register (RESET_STAT) Field Descriptions 83
Table 3-10 Reset Status Clear Register (RESET_STAT_CLR) Field Descriptions 84
Table 3-11 Boot Complete Register (BOOTCOMPLETE) Field Descriptions 85
Table 3-12 Power State Control Register (PWRSTATECTL) Field Descriptions.....86
Table 3-13 NMI Generation Register (NMIGRx) Field Descriptions.....87
Table 3-14 IPC Generation Registers (IPCGRx) Field Descriptions.....87
Table 3-15 IPC Acknowledgement Registers (IPCARx) Field Descriptions.....88
Table 3-16 IPC Generation Registers (IPCGRH) Field Descriptions.....89
Table 3-17 IPC Acknowledgement Register (IPCARH) Field Descriptions.....89
Table 3-18 Timer Input Selection Field Description (TINPSEL) 90
Table 3-19 Timer Output Selection Register (TOUTPSEL) Field Description.....93
Table 3-20 Reset Mux Register (RSTMUXx) Field Descriptions.....94
Table 3-21 DSP Suspension Control Register (DSP_SUSP_CTL) Field Descriptions.....95
Table 3-22 Device Speed Register (DEVSPEED) Field Descriptions.....96
Table 3-23 Chip Miscellaneous Control Register (CHIP_MISC_CTL) Field Descriptions 96
Table 4-1 Switch Fabric Connection Matrix Section 1.....101
Table 4-2 Switch Fabric Connection Matrix Section 2.....104
Table 4-3 Switch Fabric Connection Matrix Section 3.....105
Table 5-1 Available Memory Page Protection Schemes...113
Table 5-2 CorePac Revision ID Register (MM_REVID) Field Descriptions.....115
Table 6-1 Absolute Maximum Ratings 116
Table 6-2 Recommended Operating Conditions 117
Table 6-3 Electrical Characteristics.....118
Table 6-4 Power Supply to Peripheral I/O Mapping 119
Table 7-1 Power Supply Rails on the TMS320C6678 121
Table 7-2 Core Before IO Power Sequencing 124
Table 7-3 IO Before Core Power Sequencing 126
Table 7-4 Clock Sequencing.....127
Table 7-5 SmartReflex 4-Pin VID Interface Switching Characteristics 128
Table 7-6 Power Domains.....129
Table 7-7 Clock Domains.....130
Table 7-8 PSC Register Memory Map 131
Table 7-9 Reset Types.....133
Table 7-10 Reset Timing Requirements 138
Table 7-11 Reset Switching Characteristics Over Recommended Operating Conditions 138
Table 7-12 Boot Configuration Timing Requirements.....139
Table 7-13 Main PLL Stabilization, Lock, and Reset Times ..142
Table 7-14 PLL Controller Registers (Including Reset Controller).....143
Table 7-15 PLL Secondary Control Register (SECCTL) Field Descriptions.....144

Copyright 2014 Texas Instruments Incorporated

Table 7-16 PLL Controller Divider Register (PLLDIVn) Field Descriptions 145
Table 7-17 PLL Controller Clock Align Control Register (ALNCTL) Field Descriptions 146
Table 7-18 PLLDIV Divider Ratio Change Status Register (DCHANGE) Field Descriptions 146
Table 7-19 SYSCLK Status Register (SYSTAT) Field Descriptions 147
Table 7-20 Reset Type Status Register (RSTYPE) Field Descriptions 147
Table 7-21 Reset Control Register (RSTCTRL) Field Descriptions 148
Table 7-22 Reset Configuration Register (RSTCFG) Field Descriptions 148
Table 7-23 Reset Isolation Register (RSISO) Field Descriptions 149
Table 7-24 Main PLL Control Register 0 (MAINPLLCTL0) Field Descriptions 150
Table 7-25 Main PLL Control Register 1 (MAINPLLCTL1) Field Descriptions 150
Table 7-26 Main PLL Controller/SRIO/HyperLink/PCIe Clock Input Timing Requirements 151
Table 7-27 DDR3 PLL Control Register 0 Field Descriptions 153
Table 7-28 DDR3 PLL Control Register 1 Field Descriptions 154
Table 7-29 DDR3 PLL DDRSYSCLK1(N|P) Timing Requirements 155
Table 7-30 PASS PLL Control Register 0 Field Descriptions 157
Table 7-31 PASS PLL Control Register 1 Field Descriptions 157
Table 7-32 PASS PLL Timing Requirements 158
Table 7-33 EDMA3 Channel Controller Configuration 160
Table 7-34 EDMA3 Transfer Controller Configuration 161
Table 7-35 EDMA3CC0 Events for C6678 161
Table 7-36 EDMA3CC1 Events for C6678 161
Table 7-37 EDMA3CC2 Events for C6678 163
Table 7-38 CIC0 Event Inputs (Secondary Interrupts for C66x CorePacs) 170
Table 7-39 CIC1 Event Inputs (Secondary Interrupts for C66x CorePacs) 174
Table 7-40 CIC2 Event Inputs (Secondary Events for EDMA3CC1 and EDMA3CC2) 178
Table 7-41 CIC3 Event Inputs (Secondary Events for EDMA3CC0 and HyperLink) 181
Table 7-42 CIC0/CIC1 Register 183
Table 7-43 CIC2 Register 185
Table 7-44 CIC3 Register 187
Table 7-45 IPC Generation Registers (IPCGRx) 188
Table 7-46 $\overline{\text{LRESET}}$ and $\overline{\text{NMI}}$ Decoding 189
Table 7-47 NMI and Local Reset Timing Requirements 190
Table 7-48 HOUT Switching Characteristics 191
Table 7-49 MPU Default Configuration 192
Table 7-50 MPU Memory Regions 192
Table 7-51 Privilege ID Settings 192
Table 7-52 Master ID Settings 193
Table 7-53 MPU0 Registers 195
Table 7-54 MPU1 Registers 196
Table 7-55 MPU2 Registers 197
Table 7-56 MPU3 Registers 198
Table 7-57 Configuration Register (CONFIG) Field Descriptions 199
Table 7-58 Programmable Range n Start Address Register (PROGn_MPSAR) Field Descriptions 200
Table 7-59 Programmable Range n End Address Register (PROGn_MPEAR) Field Descriptions 200
Table 7-60 Programmable Range n Memory Protection Page Attribute Register (PROGn_MPPA) Field Descriptions 201
Table 7-61 Programmable Range n Registers Reset Values for MPU0 203
Table 7-62 Programmable Range n Registers Reset Values for MPU1 203
Table 7-63 Programmable Range n Registers Reset Values for MPU2 204
Table 7-64 Programmable Range n Registers Reset Values for MPU3 204
Table 7-65 I^2C Registers 208
Table 7-66 I^2C Timing Requirements 209
Table 7-67 I^2C Switching Characteristics 210
Table 7-68 SPI Timing Requirements 212
Table 7-69 SPI Switching Characteristics 212
Table 7-70 HyperLink Events for C6678 215
Table 7-71 HyperLink Peripheral Timing Requirements 217
Table 7-72 HyperLink Peripheral Switching Characteristics 217
Table 7-73 UART Timing Requirements 219
Table 7-74 UART Switching Characteristics 220
Table 7-75 Timing Requirements for TSIP 2x Mode 221
Table 7-76 Timing Requirements for TSIP 1x Mode 222
Table 7-77 EMIF16 Asynchronous Memory Timing Requirements 223
Table 7-78 MACID1 Register Field Descriptions 226
Table 7-79 MACID2 Register Field Descriptions 226
Table 7-80 CPTS_RFTCLK_SEL Register Field Descriptions 227
Table 7-81 MDIO Timing Requirements 228
Table 7-82 MDIO Switching Characteristics 228
Table 7-83 Timer Input Timing Requirements 230
Table 7-84 Timer Output Switching Characteristics 230
Table 7-85 GPIO Input Timing Requirements 231
Table 7-86 GPIO Output Switching Characteristics 231
Table 7-87 DSP Trace Switching Characteristics 233
Table 7-88 STM Trace Switching Characteristics 233
Table 7-89 JTAG Test Port Timing Requirements 234
Table 7-90 JTAG Test Port Switching Characteristics 234
Table 9-1 Thermal Resistance Characteristics for CYP (PBGA 841-Pin Package) 241
Table 9-2 Thermal Resistance Characteristics for GYP (PBGA 841-Pin Package) 241

Copyright 2014 Texas Instruments Incorporated

2 Device Overview

2.1 Device Characteristics

Table 2-1 shows the significant features of the device.

Table 2-1 Device Characteristics

Features		TMS320C6678
Peripherals	DDR3 Memory Controller (64-bit bus width) [1.5 V I/O] (clock source = DDRREFCLKN|P)	1
	EDMA3 (16 independent channels) [DSP/2 clock rate]	1
	EDMA3 (64 independent channels) [DSP/3 clock rate]	2
	High-speed 1× / 2× / 4× Serial RapidIO Port (4 lanes)	1
	PCIe (2 lanes)	1
	10/100/1000 Ethernet	2
	Management Data Input/Output (MDIO)	1
	HyperLink	1
	EMIF16	1
	TSIP	2
	SPI	1
	UART	1
	I^2C	1
	64-Bit Timers (configurable) (internal clock source = CPU/6 clock frequency)	Sixteen 64-bit (each configurable as two32-bit timers)
	General-Purpose Input/Output Port (GPIO)	16
Accelerators	Packet Accelerator	1
	Security Accelerator (1)	1
On-Chip Memory	Size (Bytes)	8832KB
	Organization	256KB L1 Program Memory [SRAM/Cache] 256KB L1 Data Memory [SRAM/Cache] 4096KB L2 Unified Memory/Cache 4096KB MSM SRAM 128KB L3 ROM
C66x CorePac Rev ID	CorePac Revision ID Register (address location: 0181 2000h)	See Section 5.5 "C66x CorePac Revision".
JTAG BSDL_ID	JTAGID register (address location: 0262 0018h)	See Section 3.3.3 "JTAG ID Register (JTAGID) Description"
Frequency	MHz	1400 (1.4 GHz)
		1250 (1.25 GHz)
		1000 (1.0 GHz)
Cycle Time	ns	0.714 ns (1.4 GHz)
		0.8 ns (1.25 GHz)
		1 ns (1.0 GHz)
Voltage	Core (V)	SmartReflex variable supply
	I/O (V)	1.0 V, 1.5 V, and 1.8 V
Process Technology	µm	0.040 µm
BGA Package	24 mm × 24 mm lead-free die bump and solder ball package, or leaded	CYP 841-Pin (lead-free), GYP 841- pin (leaded)
Product Status (2)	Product Preview (PP), Advance Information (AI), or Production Data (PD)	PD

1 The Security Accelerator function is subject to export control and will be enabled *only* for approved device shipments.

2 PRODUCTION DATA information is current as of publication date. Products conform to specifications per the terms of Texas Instruments standard warranty. Production processing does not necessarily include testing of all parameters.

Copyright 2014 Texas Instruments Incorporated

2.2 DSP Core Description

The C66x Digital Signal Processor (DSP) extends the performance of the C64x+ and C674x DSPs through enhancements and new features. Many of the new features target increased performance for vector processing. The C64x+ and C674x DSPs support 2-way SIMD operations for 16-bit data and 4-way SIMD operations for 8-bit data. On the C66x DSP, the vector processing capability is improved by extending the width of the SIMD instructions. C66x DSPs can execute instructions that operate on 128-bit vectors. For example the QMPY32 instruction is able to perform the element-to-element multiplication between two vectors of four 32-bit data each. The C66x DSP also supports SIMD for floating-point operations. Improved vector processing capability (each instruction can process multiple data in parallel) combined with the natural instruction level parallelism of C6000 architecture (e.g execution of up to 8 instructions per cycle) results in a very high level of parallelism that can be exploited by DSP programmers through the use of TI's optimized C/C++ compiler.

The C66x DSP consists of eight functional units, two register files, and two data paths as shown in Figure 2-1. The two general-purpose register files (A and B) each contain thirty-two 32-bit registers for a total of 64 registers. The general-purpose registers can be used for data or can be data address pointers. The data types supported include packed 8-bit data, packed 16-bit data, 32-bit data, 40-bit data, and 64-bit data. Multiplies also support 128-bit data. 40-bit-long or 64-bit-long values are stored in register pairs, with the 32 LSBs of data placed in an even register and the remaining 8 or 32 MSBs in the next upper register (which is always an odd-numbered register). 128-bit data values are stored in register quadruplets, with the 32 LSBs of data placed in a register that is a multiple of 4 and the remaining 96 MSBs in the next 3 upper registers.

The eight functional units (.M1, .L1, .D1, .S1, .M2, .L2, .D2, and .S2) are each capable of executing one instruction every clock cycle. The .M functional units perform all multiply operations. The .S and .L units perform a general set of arithmetic, logical, and branch functions. The .D units primarily load data from memory to the register file and store results from the register file into memory.

Each C66x .M unit can perform one of the following fixed-point operations each clock cycle: four 32 × 32 bit multiplies, sixteen 16 × 16 bit multiplies, four 16 × 32 bit multiplies, four 8 × 8 bit multiplies, four 8 × 8 bit multiplies with add operations, and four 16 × 16 multiplies with add/subtract capabilities. There is also support for Galois field multiplication for 8-bit and 32-bit data. Many communications algorithms such as FFTs and modems require complex multiplication. Each C66x .M unit can perform one 16 × 16 bit complex multiply with or without rounding capabilities, two 16 × 16 bit complex multiplies with rounding capability, and a 32 × 32 bit complex multiply with rounding capability. The C66x can also perform two 16 × 16 bit and one 32 × 32 bit complex multiply instructions that multiply a complex number with a complex conjugate of another number with rounding capability. Communication signal processing also requires an extensive use of matrix operations. Each C66x .M unit is capable of multiplying a [1 × 2] complex vector by a [2 × 2] complex matrix per cycle with or without rounding capability. A version also exists allowing multiplication of the conjugate of a [1 × 2] vector with a [2 × 2] complex matrix.

Each C66x .M unit also includes IEEE floating-point multiplication operations from the C674x DSP, which includes one single-precision multiply each cycle and one double-precision multiply every 4 cycles. There is also a mixed-precision multiply that allows multiplication of a single-precision value by a double-precision value and an operation allowing multiplication of two single-precision numbers resulting in a double-precision number. The C66x DSP improves the performance over the C674x double-precision multiplies by adding a instruction allowing one double-precision multiply per cycle and also reduces the number of delay slots from 10 down to 4. Each C66x .M unit can also perform one the following floating-point operations each clock cycle: one, two, or four single-precision multiplies or a complex single-precision multiply.

The .L and .S units can now support up to 64-bit operands. This allows for new versions of many of the arithmetic, logical, and data packing instructions to allow for more parallel operations per cycle. Additional instructions were added yielding performance enhancements of the floating point addition and subtraction instructions, including the ability to perform one double precision addition or subtraction per cycle. Conversion to/from integer and

Copyright 2014 Texas Instruments Incorporated

single-precision values can now be done on both .L and .S units on the C66x. Also, by taking advantage of the larger operands, instructions were also added to double the number of these conversions that can be done. The .L unit also has additional instructions for logical AND and OR instructions, as well as, 90 degree or 270 degree rotation of complex numbers (up to two per cycle). Instructions have also been added that allow for the computing the conjugate of a complex number.

The MFENCE instruction is a new instruction introduced on the C66x DSP. This instruction will create a DSP stall until the completion of all the DSP-triggered memory transactions, including:

- Cache line fills
- Writes from L1D to L2 or from the CorePac to MSMC and/or other system endpoints
- Victim write backs
- Block or global coherence operations
- Cache mode changes
- Outstanding XMC prefetch requests

This is useful as a simple mechanism for programs to wait for these requests to reach their endpoint. It also provides ordering guarantees for writes arriving at a single endpoint via multiple paths, multiprocessor algorithms that depend on ordering, and manual coherence operations.

For more details on the C66x DSP and its enhancements over the C64x+ and C674x architectures, see the following documents:

- *C66x DSP CPU and Instruction Set Reference Guide* in "Related Documentation from Texas Instruments" on page 72.
- *C66x DSP Cache User Guide* in "Related Documentation from Texas Instruments" on page 72.
- *C66x DSP CorePac User Guide* in "Related Documentation from Texas Instruments" on page 72.

Copyright 2014 Texas Instruments Incorporated

Figure 2-1 shows the DSP core functional units and data paths.

Figure 2-1 DSP Core Data Paths

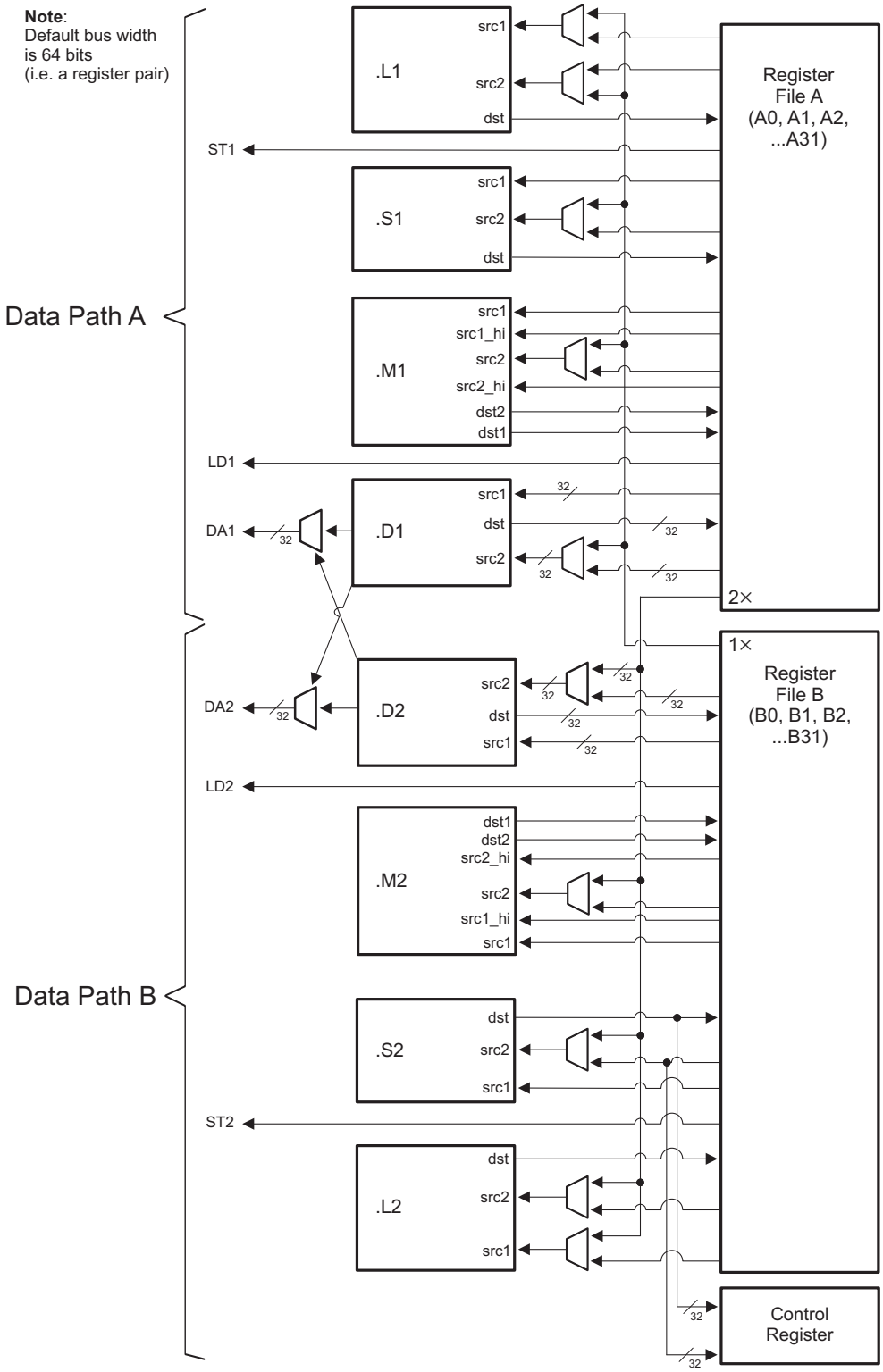

Copyright 2014 Texas Instruments Incorporated

2.3 Memory Map Summary

Table 2-2 shows the memory map address ranges of the TMS320C6678 device.

Table 2-2 Memory Map Summary (Sheet 1 of 7)

Logical 32-bit Address		Physical 36-bit Address		Bytes	Description
Start	End	Start	End		
00000000	007FFFFF	0 00000000	0 007FFFFF	8M	Reserved
00800000	0087FFFF	0 00800000	0 0087FFFF	512K	Local L2 SRAM
00880000	00DFFFFF	0 00880000	0 00DFFFFF	5M+512K	Reserved
00E00000	00E07FFF	0 00E00000	0 00E07FFF	32K	Local L1P SRAM
00E08000	00EFFFFF	0 00E08000	0 00EFFFFF	1M-32K	Reserved
00F00000	00F07FFF	0 00F00000	0 00F07FFF	32K	Local L1D SRAM
00F08000	017FFFFF	0 00F08000	0 017FFFFF	9M-32K	Reserved
01800000	01BFFFFF	0 01800000	0 01BFFFFF	4M	C66x CorePac Registers
01C00000	01CFFFFF	0 01C00000	0 01CFFFFF	1M	Reserved
01D00000	01D0007F	0 01D00000	0 01D0007F	128	Tracer_MSMC_0
01D00080	01D07FFF	0 01D00080	0 01D07FFF	32K-128	Reserved
01D08000	01D0807F	0 01D08000	0 01D0807F	128	Tracer_MSMC_1
01D08080	01D0FFFF	0 01D08080	0 01D0FFFF	32K-128	Reserved
01D10000	01D1007F	0 01D10000	0 01D1007F	128	Tracer_MSMC_2
01D10080	01D17FFF	0 01D10080	0 01D17FFF	32K-128	Reserved
01D18000	01D1807F	0 01D18000	0 01D1807F	128	Tracer_MSMC_3
01D18080	01D1FFFF	0 01D18080	0 01D1FFFF	32K-128	Reserved
01D20000	01D2007F	0 01D20000	0 01D2007F	128	Tracer_QM_DMA
01D20080	01D27FFF	0 01D20080	0 01D27FFF	32K-128	Reserved
01D28000	01D2807F	0 01D28000	0 01D2807F	128	Tracer_DDR
01D28080	01D2FFFF	0 01D28080	0 01D2FFFF	32K-128	Reserved
01D30000	01D3007F	0 01D30000	0 01D3007F	128	Tracer_SM
01D30080	01D37FFF	0 01D30080	0 01D37FFF	32K-128	Reserved
01D38000	01D3807F	0 01D38000	0 01D3807F	128	Tracer_QM_CFG
01D38080	01D3FFFF	0 01D38080	0 01D3FFFF	32K-128	Reserved
01D40000	01D4007F	0 01D40000	0 01D4007F	128	Tracer_CFG
01D40080	01D47FFF	0 01D40080	0 01D47FFF	32K-128	Reserved
01D48000	01D4807F	0 01D48000	0 01D4807F	128	Tracer_L2_0
01D48080	01D4FFFF	0 01D48080	0 01D4FFFF	32K-128	Reserved
01D50000	01D5007F	0 01D50000	0 01D5007F	128	Tracer_L2_1
01D50080	01D57FFF	0 01D50080	0 01D57FFF	32K-128	Reserved
01D58000	01D5807F	0 01D58000	0 01D5807F	128	Tracer_L2_2
01D58080	01D5FFFF	0 01D58080	0 01D5FFFF	32K-128	Reserved
01D60000	01D6007F	0 01D60000	0 01D6007F	128	Tracer_L2_3
01D60080	01D67FFF	0 01D60080	0 01D67FFF	32K-128	Reserved
01D68000	01D6807F	0 01D68000	0 01D6807F	128	Tracer_L2_4
01D68080	01D6FFFF	0 01D68080	0 01D6FFFF	32K-128	Reserved
01D70000	01D7007F	0 01D70000	0 01D7007F	128	Tracer_L2_5
01D70080	01D77FFF	0 01D70080	0 01D77FFF	32K-128	Reserved
01D78000	01D7807F	0 01D78000	0 01D7807F	128	Tracer_L2_6

Copyright 2014 Texas Instruments Incorporated

Table 2-2 Memory Map Summary (Sheet 2 of 7)

Logical 32-bit Address		Physical 36-bit Address			
Start	End	Start	End	Bytes	Description
01D78080	01D7FFFF	0 01D78080	0 01D7FFFF	32K-128	Reserved
01D80000	01D8007F	0 01D80000	0 01D8007F	128	Tracer_L2_7
01D80080	01DFFFFF	0 01D80080	0 01DFFFFF	512K-128	Reserved
01E00000	01E3FFFF	0 01E00000	0 01E3FFFF	256K	Telecom Serial Interface Port (TSIP) 0
01E40000	01E7FFFF	0 01E40000	0 01E7FFFF	256K	Reserved
01E80000	01EBFFFF	0 01E80000	0 01EBFFFF	256K	Telecom Serial Interface Port (TSIP) 1
01EC0000	01FFFFFF	0 01EC0000	0 01FFFFFF	1M +256K	Reserved
02000000	020FFFFF	0 02000000	0 020FFFFF	1M	Network Coprocessor (Packet Accelerator, Gigabit Ethernet Switch Subsystem and Security Accelerator)
02100000	021FFFFF	0 02100000	0 021FFFFF	1M	Reserved
02200000	0220007F	0 02200000	0 0220007F	128	Timer0
02200080	0220FFFF	0 02200080	0 0220FFFF	64K-128	Reserved
02210000	0221007F	0 02210000	0 0221007F	128	Timer1
02210080	0221FFFF	0 02210080	0 0221FFFF	64K-128	Reserved
02220000	0222007F	0 02220000	0 0222007F	128	Timer2
02220080	0222FFFF	0 02220080	0 0222FFFF	64K-128	Reserved
02230000	0223007F	0 02230000	0 0223007F	128	Timer3
02230080	0223FFFF	0 02230080	0 0223FFFF	64K-128	Reserved
02240000	0224007F	0 02240000	0 0224007F	128	Timer4
02240080	0224FFFF	0 02240080	0 0224FFFF	64K-128	Reserved
02250000	0225007F	0 02250000	0 0225007F	128	Timer5
02250080	0225FFFF	0 02250080	0 0225FFFF	64K-128	Reserved
02260000	0226007F	0 02260000	0 0226007F	128	Timer6
02260080	0226FFFF	0 02260080	0 0226FFFF	64K-128	Reserved
02270000	0227007F	0 02270000	0 0227007F	128	Timer7
02270080	0227FFFF	0 02270080	0 0227FFFF	64K-128	Reserved
02280000	0228007F	0 02280000	0 0228007F	128	Timer8
02280080	0228FFFF	0 02280080	0 0228FFFF	64K-128	Reserved
02290000	0229007F	0 02290000	0 0229007F	128	Timer9
02290080	0229FFFF	0 02290080	0 0229FFFF	64K-128	Reserved
022A0000	022A007F	0 022A0000	0 022A007F	128	Timer10
022A0080	022AFFFF	0 022A0080	0 022AFFFF	64K-128	Reserved
022B0000	022B007F	0 022B0000	0 022B007F	128	Timer11
022B0080	022BFFFF	0 022B0080	0 022BFFFF	64K-128	Reserved
022C0000	022C007F	0 022C0000	0 022C007F	128	Timer12
022C0080	022CFFFF	0 022C0080	0 022CFFFF	64K-128	Reserved
022D0000	022D007F	0 022D0000	0 022D007F	128	Timer13
022D0080	022DFFFF	0 022D0080	0 022DFFFF	64K-128	Reserved
022E0000	022E007F	0 022E0000	0 022E007F	128	Timer14
022E0080	022EFFFF	0 022E0080	0 022EFFFF	64K-128	Reserved
022F0000	022F007F	0 022F0000	0 022F007F	128	Timer15
022F0080	022FFFFF	0 022F0080	0 022FFFFF	64K-128	Reserved
02300000	0230FFFF	0 02300000	0 0230FFFF	64K	Reserved

Copyright 2014 Texas Instruments Incorporated

Table 2-2 Memory Map Summary (Sheet 3 of 7)

Logical 32-bit Address		Physical 36-bit Address			
Start	End	Start	End	Bytes	Description
02310000	023101FF	0 02310000	0 023101FF	512	PLL Controller
02310200	0231FFFF	0 02310200	0 0231FFFF	64K-512	Reserved
02320000	023200FF	0 02320000	0 023200FF	256	GPIO
02320100	0232FFFF	0 02320100	0 0232FFFF	64K-256	Reserved
02330000	023303FF	0 02330000	0 023303FF	1K	SmartReflex
02330400	0234FFFF	0 02330400	0 0234FFFF	127K	Reserved
02350000	02350FFF	0 02350000	0 02350FFF	4K	Power Sleep Controller (PSC)
02351000	0235FFFF	0 02351000	0 0235FFFF	64K-4K	Reserved
02360000	023603FF	0 02360000	0 023603FF	1K	Memory Protection Unit (MPU) 0
02360400	02367FFF	0 02360400	0 02367FFF	31K	Reserved
02368000	023683FF	0 02368000	0 023683FF	1K	Memory Protection Unit (MPU) 1
02368400	0236FFFF	0 02368400	0 0236FFFF	31K	Reserved
02370000	023703FF	0 02370000	0 023703FF	1K	Memory Protection Unit (MPU) 2
02370400	02377FFF	0 02370400	0 02377FFF	31K	Reserved
02378000	023783FF	0 02378000	0 023783FF	1K	Memory Protection Unit (MPU) 3
02378400	023FFFFF	0 02378400	0 023FFFFF	543K	Reserved
02400000	0243FFFF	0 02400000	0 0243FFFF	256K	Debug Subsystem Configuration
02440000	02443FFF	0 02440000	0 02443FFF	16K	DSP trace formatter 0
02444000	0244FFFF	0 02444000	0 0244FFFF	48K	Reserved
02450000	02453FFF	0 02450000	0 02453FFF	16K	DSP trace formatter 1
02454000	0245FFFF	0 02454000	0 0245FFFF	48K	Reserved
02460000	02463FFF	0 02460000	0 02463FFF	16K	DSP trace formatter 2
02464000	0246FFFF	0 02464000	0 0246FFFF	48K	Reserved
02470000	02473FFF	0 02470000	0 02473FFF	16K	DSP trace formatter 3
02474000	0247FFFF	0 02474000	0 0247FFFF	48K	Reserved
02480000	02483FFF	0 02480000	0 02483FFF	16K	DSP trace formatter 4
02484000	0248FFFF	0 02484000	0 0248FFFF	48K	Reserved
02490000	02493FFF	0 02490000	0 02493FFF	16K	DSP trace formatter 5
02494000	0249FFFF	0 02494000	0 0249FFFF	48K	Reserved
024A0000	024A3FFF	0 024A0000	0 024A3FFF	16K	DSP trace formatter 6
024A4000	024AFFFF	0 024A4000	0 024AFFFF	48K	Reserved
024B0000	024B3FFF	0 024B0000	0 024B3FFF	16K	DSP trace formatter 7
024B4000	024BFFFF	0 024B4000	0 024BFFFF	48K	Reserved
024C0000	0252FFFF	0 024C0000	0 0252FFFF	448K	Reserved
02530000	0253007F	0 02530000	0 0253007F	128	I^2C data & control
02530080	0253FFFF	0 02530080	0 0253FFFF	64K-128	Reserved
02540000	0254003F	0 02540000	0 0254003F	64	UART
02540400	0254FFFF	0 02540400	0 0254FFFF	64K-64	Reserved
02550000	025FFFFF	0 02550000	0 025FFFFF	704K	Reserved
02600000	02601FFF	0 02600000	0 02601FFF	8K	Chip Interrupt Controller (CIC) 0
02602000	02603FFF	0 02602000	0 02603FFF	8K	Reserved
02604000	02605FFF	0 02604000	0 02605FFF	8K	Chip Interrupt Controller (CIC) 1
02606000	02607FFF	0 02606000	0 02607FFF	8K	Reserved

Copyright 2014 Texas Instruments Incorporated

Table 2-2 Memory Map Summary (Sheet 4 of 7)

Logical 32-bit Address		Physical 36-bit Address			
Start	End	Start	End	Bytes	Description
02608000	02609FFF	0 02608000	0 02609FFF	8K	Chip Interrupt Controller (CIC) 2
0260A000	0260BFFF	0 0260A000	0 0260BFFF	8K	Reserved
0260C000	0260DFFF	0 0260C000	0 0260DFFF	8K	Chip Interrupt Controller (CIC) 3
0260E000	0261FFFF	0 0260E000	0 0261FFFF	72K	Reserved
02620000	026207FF	0 02620000	0 026207FF	2K	Chip-Level Registers
02620800	0263FFFF	0 02620800	0 0263FFFF	126K	Reserved
02640000	026407FF	0 02640000	0 026407FF	2K	Semaphore
02640800	0264FFFF	0 02640800	0 0264FFFF	64K-2K	Reserved
02650000	026FFFFF	0 02650000	0 026FFFFF	704K	Reserved
02700000	02707FFF	0 02700000	0 02707FFF	32K	EDMA3 Channel Controller (EDMA3CC) 0
02708000	0271FFFF	0 02708000	0 0271FFFF	96K	Reserved
02720000	02727FFF	0 02720000	0 02727FFF	32K	EDMA3 Channel Controller (EDMA3CC) 1
02728000	0273FFFF	0 02728000	0 0273FFFF	96K	Reserved
02740000	02747FFF	0 02740000	0 02747FFF	32K	EDMA3 Channel Controller (EDMA3CC) 2
02748000	0275FFFF	0 02748000	0 0275FFFF	96K	Reserved
02760000	027603FF	0 02760000	0 027603FF	1K	EDMA3CC0 Transfer Controller (EDMA3TC) 0
02760400	02767FFF	0 02760400	0 02767FFF	31K	Reserved
02768000	027683FF	0 02768000	0 027683FF	1K	EDMA3CC0 Transfer Controller (EDMA3TC) 1
02768400	0276FFFF	0 02768400	0 0276FFFF	31K	Reserved
02770000	027703FF	0 02770000	0 027703FF	1K	EDMA3CC1 Transfer Controller (EDMA3TC) 0
02770400	02777FFF	0 02770400	0 02777FFF	31K	Reserved
02778000	027783FF	0 02778000	0 027783FF	1K	EDMA3CC1 Transfer Controller (EDMA3TC) 1
02778400	0277FFFF	0 02778400	0 0277FFFF	31K	Reserved
02780000	027803FF	0 02780000	0 027803FF	1K	EDMA3CC1 Transfer Controller (EDMA3TC) 2
02780400	02787FFF	0 02780400	0 02787FFF	31K	Reserved
02788000	027883FF	0 02788000	0 027883FF	1K	EDMA3CC1 Transfer Controller (EDMA3TC) 3
02788400	0278FFFF	0 02788400	0 0278FFFF	31K	Reserved
02790000	027903FF	0 02790000	0 027903FF	1K	EDMA3PCC2 Transfer Controller (EDMA3TC) 0
02790400	02797FFF	0 02790400	0 02797FFF	31K	Reserved
02798000	027983FF	0 02798000	0 027983FF	1K	EDMA3CC2 Transfer Controller (EDMA3TC) 1
02798400	0279FFFF	0 02798400	0 0279FFFF	31K	Reserved
027A0000	027A03FF	0 027A0000	0 027A03FF	1K	EDMA3CC2 Transfer Controller (EDMA3TC) 2
027A0400	027A7FFF	0 027A0400	0 027A7FFF	31K	Reserved
027A8000	027A83FF	0 027A8000	0 027A83FF	1K	EDMA3CC2 Transfer Controller (EDMA3TC) 3
027A8400	027AFFFF	0 027A8400	0 027AFFFF	31K	Reserved
027B0000	027CFFFF	0 027B0000	0 027CFFFF	128K	Reserved
027D0000	027D0FFF	0 027D0000	0 027D0FFF	4K	TI embedded trace buffer (TETB) - CorePac0
027D1000	027DFFFF	0 027D1000	0 027DFFFF	60K	Reserved
027E0000	027E0FFF	0 027E0000	0 027E0FFF	4K	TI embedded trace buffer (TETB) - CorePac1
027E1000	027EFFFF	0 027E1000	0 027EFFFF	60K	Reserved
027F0000	027F0FFF	0 027F0000	0 027F0FFF	4K	TI embedded trace buffer (TETB) - CorePac2
027F1000	027FFFFF	0 027F1000	0 027FFFFF	60K	Reserved
02800000	02800FFF	0 02800000	0 02800FFF	4K	TI embedded trace buffer (TETB) - CorePac3

Copyright 2014 Texas Instruments Incorporated

Table 2-2 Memory Map Summary (Sheet 5 of 7)

Logical 32-bit Address		Physical 36-bit Address			
Start	End	Start	End	Bytes	Description
02801000	0280FFFF	0 02801000	0 0280FFFF	60K	Reserved
02810000	02810FFF	0 02810000	0 02810FFF	4K	TI embedded trace buffer (TETB) - CorePac4
02811000	0281FFFF	0 02811000	0 0281FFFF	60K	Reserved
02820000	02820FFF	0 02820000	0 02820FFF	4K	TI embedded trace buffer (TETB) - CorePac5
02821000	0282FFFF	0 02821000	0 0282FFFF	60K	Reserved
02830000	02830FFF	0 02830000	0 02830FFF	4K	TI embedded trace buffer (TETB) - CorePac6
02831000	0283FFFF	0 02831000	0 0283FFFF	60K	Reserved
02840000	02840FFF	0 02840000	0 02840FFF	4K	TI embedded trace buffer (TETB) - CorePac7
02841000	0284FFFF	0 02841000	0 0284FFFF	60K	Reserved
02850000	02857FFF	0 02850000	0 02857FFF	32K	TI embedded trace buffer (TETB) — system
02858000	0285FFFF	0 02858000	0 0285FFFF	32K	Reserved
02860000	028FFFFF	0 02860000	0 028FFFFF	640K	Reserved
02900000	02920FFF	0 02900000	0 02920FFF	132K	Serial RapidIO (SRIO) configuration
02921000	029FFFFF	0 02921000	0 029FFFFF	1M-132K	Reserved
02A00000	02BFFFFF	0 02A00000	0 02BFFFFF	2M	Queue manager subsystem configuration
02C00000	07FFFFFF	0 02C00000	0 07FFFFFF	84M	Reserved
08000000	0800FFFF	0 08000000	0 0800FFFF	64K	Extended memory controller (XMC) configuration
08010000	0BBFFFFF	0 08010000	0 0BBFFFFF	60M-64K	Reserved
0BC00000	0BCFFFFF	0 0BC00000	0 0BCFFFFF	1M	Multicore shared memory controller (MSMC) config
0BD00000	0BFFFFFF	0 0BD00000	0 0BFFFFFF	3M	Reserved
0C000000	0C3FFFFF	0 0C000000	0 0C3FFFFF	4M	Multicore shared memory (MSM)
0C400000	107FFFFF	0 0C400000	0 107FFFFF	68 M	Reserved
10800000	1087FFFF	0 10800000	0 1087FFFF	512K	CorePac0 L2 SRAM
10880000	108FFFFF	0 10880000	0 108FFFFF	512K	Reserved
10900000	10DFFFFF	0 10900000	0 10DFFFFF	5M	Reserved
10E00000	10E07FFF	0 10E00000	0 10E07FFF	32K	CorePac0 L1P SRAM
10E08000	10EFFFFF	0 10E08000	0 10EFFFFF	1M-32K	Reserved
10F00000	10F07FFF	0 10F00000	0 10F07FFF	32K	CorePac0 L1D SRAM
10F08000	117FFFFF	0 10F08000	0 117FFFFF	9M-32K	Reserved
11800000	1187FFFF	0 11800000	0 1187FFFF	512K	CorePac1 L2 SRAM
11880000	118FFFFF	0 11880000	0 118FFFFF	512K	Reserved
11900000	11DFFFFF	0 11900000	0 11DFFFFF	5M	Reserved
11E00000	11E07FFF	0 11E00000	0 11E07FFF	32K	CorePac1 L1P SRAM
11E08000	11EFFFFF	0 11E08000	0 11EFFFFF	1M-32K	Reserved
11F00000	11F07FFF	0 11F00000	0 11F07FFF	32K	CorePac1 L1D SRAM
11F08000	127FFFFF	0 11F08000	0 127FFFFF	9M-32K	Reserved
12800000	1287FFFF	0 12800000	0 1287FFFF	512K	CorePac2 L2 SRAM
12880000	128FFFFF	0 12880000	0 128FFFFF	512K	Reserved
12900000	12DFFFFF	0 12900000	0 12DFFFFF	5M	Reserved
12E00000	12E07FFF	0 12E00000	0 12E07FFF	32K	CorePac2 L1P SRAM
12E08000	12EFFFFF	0 12E08000	0 12EFFFFF	1M-32K	Reserved
12F00000	12F07FFF	0 12F00000	0 12F07FFF	32K	CorePac2 L1D SRAM
12F08000	137FFFFF	0 12F08000	0 137FFFFF	9M-32K	Reserved

Copyright 2014 Texas Instruments Incorporated

Table 2-2 Memory Map Summary (Sheet 6 of 7)

Logical 32-bit Address		Physical 36-bit Address			
Start	End	Start	End	Bytes	Description
13800000	1387FFFF	0 13800000	0 1387FFFF	512K	CorePac3 L2 SRAM
13880000	138FFFFF	0 13880000	0 138FFFFF	512K	Reserved
13900000	13DFFFFF	0 13900000	0 13DFFFFF	5M	Reserved
13E00000	13E07FFF	0 13E00000	0 13E07FFF	32K	CorePac3 L1P SRAM
13E08000	13EFFFFF	0 13E08000	0 13EFFFFF	1M-32K	Reserved
13F00000	13F07FFF	0 13F00000	0 13F07FFF	32K	CorePac3 L1D SRAM
13F08000	147FFFFF	0 13F08000	0 147FFFFF	9M-32K	Reserved
14800000	1487FFFF	0 14800000	0 1487FFFF	512K	CorePac4 L2 SRAM
14880000	148FFFFF	0 14880000	0 148FFFFF	512K	Reserved
14900000	14DFFFFF	0 14900000	0 14DFFFFF	5M	Reserved
14E00000	14E07FFF	0 14E00000	0 14E07FFF	32K	CorePac4 L1P SRAM
14E08000	14EFFFFF	0 14E08000	0 14EFFFFF	1M-32K	Reserved
14F00000	14F07FFF	0 14F00000	0 14F07FFF	32K	CorePac4 L1D SRAM
14F08000	157FFFFF	0 14F08000	0 157FFFFF	9M-32K	Reserved
15800000	1587FFFF	0 15800000	0 1587FFFF	512K	CorePac5 L2 SRAM
15880000	158FFFFF	0 15880000	0 158FFFFF	512K	Reserved
15900000	15DFFFFF	0 15900000	0 15DFFFFF	5M	Reserved
15E00000	15E07FFF	0 15E00000	0 15E07FFF	32K	CorePac5 L1P SRAM
15E08000	15EFFFFF	0 15E08000	0 15EFFFFF	1M-32K	Reserved
15F00000	15F07FFF	0 15F00000	0 15F07FFF	32K	CorePac5 L1D SRAM
15F08000	167FFFFF	0 15F08000	0 167FFFFF	9M-32K	Reserved
16800000	1687FFFF	0 16800000	0 1687FFFF	512K	CorePac6 L2 SRAM
16880000	168FFFFF	0 16880000	0 168FFFFF	512K	Reserved
16900000	16DFFFFF	0 16900000	0 16DFFFFF	5M	Reserved
16E00000	16E07FFF	0 16E00000	0 16E07FFF	32K	CorePac6 L1P SRAM
16E08000	16EFFFFF	0 16E08000	0 16EFFFFF	1M-32K	Reserved
16F00000	16F07FFF	0 16F00000	0 16F07FFF	32K	CorePac6 L1D SRAM
16F08000	177FFFFF	0 16F08000	0 177FFFFF	9M-32K	Reserved
17800000	1787FFFF	0 17800000	0 1787FFFF	512K	CorePac7 L2 SRAM
17880000	178FFFFF	0 17880000	0 178FFFFF	512K	Reserved
17900000	17DFFFFF	0 17900000	0 17DFFFFF	5M	Reserved
17E00000	17E07FFF	0 17E00000	0 17E07FFF	32K	CorePac7 L1P SRAM
17E08000	17EFFFFF	0 17E08000	0 17EFFFFF	1M-32K	Reserved
17F00000	17F07FFF	0 17F00000	0 17F07FFF	32K	CorePac7 L2 SRAM
17F08000	1FFFFFFF	0 17F08000	0 1FFFFFFF	129M-32K	Reserved
20000000	200FFFFF	0 20000000	0 200FFFFF	1M	System trace manager (STM) configuration
20100000	20AFFFFF	0 20100000	0 20AFFFFF	10M	Reserved
20B00000	20B1FFFF	0 20B00000	0 20B1FFFF	128K	Boot ROM
20B20000	20BEFFFF	0 20B20000	0 20BEFFFF	832K	Reserved
20BF0000	20BF01FF	0 20BF0000	0 20BF01FF	512	SPI
20BF0200	20BFFFFF	0 20BF0200	0 20BFFFFF	64K-512	Reserved
20C00000	20C000FF	0 20C00000	0 20C000FF	256	EMIF16 config
20C00100	20FFFFFF	0 20C00100	0 20FFFFFF	12M - 256	Reserved

Copyright 2014 Texas Instruments Incorporated

Table 2-2 Memory Map Summary (Sheet 7 of 7)

Logical 32-bit Address		Physical 36-bit Address		Bytes	Description
Start	End	Start	End		
21000000	210001FF	1 00000000	1 000001FF	512	DDR3 EMIF configuration
21000200	213FFFFF	0 21000200	0 213FFFFF	4M-512	Reserved
21400000	214000FF	0 21400000	0 214000FF	256	HyperLink config
21400100	217FFFFF	0 21400100	0 217FFFFF	4M-256	Reserved
21800000	21807FFF	0 21800000	0 21807FFF	32K	PCIe config
21808000	33FFFFFF	0 21808000	0 33FFFFFF	296M-32K	Reserved
34000000	341FFFFF	0 34000000	0 341FFFFF	2M	Queue manager subsystem data
34200000	3FFFFFFF	0 34200000	0 3FFFFFFF	190M	Reserved
40000000	4FFFFFFF	0 40000000	0 4FFFFFFF	256M	HyperLink data
50000000	5FFFFFFF	0 50000000	0 5FFFFFFF	256M	Reserved
60000000	6FFFFFFF	0 60000000	0 6FFFFFFF	256M	PCIe data
70000000	73FFFFFF	0 70000000	0 73FFFFFF	64M	EMIF16 CE0 data space, supports NAND, NOR or SRAM memory (1)
74000000	77FFFFFF	0 74000000	0 77FFFFFF	64M	EMIF16 CE1 data space, supports NAND, NOR or SRAM memory (1)
78000000	7BFFFFFF	0 78000000	0 7BFFFFFF	64M	EMIF16 CE2 data space, supports NAND, NOR or SRAM memory (1)
7C000000	7FFFFFFF	0 7C000000	0 7FFFFFFF	64M	EMIF16 CE3 data space, supports NAND, NOR or SRAM memory (1)
80000000	FFFFFFFF	8 00000000	8 7FFFFFFF	2G	DDR3 EMIF data (2)
End of Table 2-2					

1 32MB per chip select for 16-bit NOR and SRAM. 16MB per chip select for 8-bit NOR and SRAM. The 32MB and 16MB size restrictions do not apply to NAND.

2 The memory map shows only the default MPAX configuration of DDR3 memory space. For the extended DDR3 memory space access (up to 8GB), see the MPAX configuration details in *C66x CorePac User Guide* and *Multicore Shared Memory Controller (MSMC) for KeyStone Devices User Guide* in "Related Documentation from Texas Instruments" on page 72.

2.4 Boot Sequence

The boot sequence is a process by which the DSP's internal memory is loaded with program and data sections. The DSP's internal registers are programmed with predetermined values. The boot sequence is started automatically after each power-on reset, warm reset, and system reset. A local reset to an individual C66x CorePac should not affect the state of the hardware boot controller on the device. For more details on the initiators of the resets, see section 7.5 "Reset Controller" on page 133. The bootloader uses a section of the L2 SRAM (start address 0x0087 2DC0 and end address 0x0087 FFFF) during initial booting of the device. For more details on the type of configurations stored in this reserved L2 section see Table 2-3.

Table 2-3 Bootloader section in L2 SRAM (Sheet 1 of 2)

Start Address (Hex)	Size (Hex Bytes)	Description
0x00872DC0	0x40	ROM boot version string (Unreserved)
0x00872E00	0x400	Boot code stack
0x00873200	0xE0	Boot log
0x008732E0	0x20	Boot progress register stack (copies of boot program on mode change)
0x00873300	0x100	Boot Internal Stats
0x00873400	0x20	Boot table arguments
0x00873420	0xE0	ROM boot FAR data
0x00873500	0x100	DDR configuration table
0x00873600	0x80	RAM table
0x00873680	0x80	Boot parameter table
0x00873700	0x4900	Clear text packet scratch
0x00878000	0x7F80	Ethernet/SRIO packet/message/descriptor memory

Copyright 2014 Texas Instruments Incorporated

Table 2-3 Bootloader section in L2 SRAM (Sheet 2 of 2)

Start Address (Hex)	Size (Hex Bytes)	Description
0x0087FF80	0x40	Small stack
0x0087FFC0	0x3C	Not used
0x0087FFFC	0x4	Boot magic address
End of Table 2-3		

The C6678 supports several boot processes that begins execution at the ROM base address, which contains the bootloader code necessary to support various device boot modes. The boot processes are software-driven and use the BOOTMODE[12:0] device configuration inputs to determine the software configuration that must be completed. For more details on Boot Sequence see the *DSP Bootloader for KeyStone Devices User Guide* in "Related Documentation from Texas Instruments" on page 72.

2.5 Boot Modes Supported and PLL Settings

The device supports several boot processes, which leverage the internal boot ROM. Most boot processes are software driven, using the BOOTMODE[3:0] device configuration inputs to determine the software configuration that must be completed. From a hardware perspective, there are two possible boot modes:

- **Public ROM Boot** - C66x CorePac0 is released from reset and begins executing from the L3 ROM base address. After performing the boot process (e.g., from I^2C ROM, Ethernet, or RapidIO), C66x CorePac0 then begins execution from the provided boot entry point. Other C66x CorePacs are released from reset and begin executing an IDLE from the L3 ROM. They are then released from IDLE based on interrupts generated by C66x CorePac0. See the *DSP Bootloader for KeyStone Devices User Guide* in "Related Documentation from Texas Instruments" on page 72 for more details.
- **Secure ROM Boot** - On secure devices, the C66x CorePac0 is released from reset and begin executing from secure ROM. Software in the secure ROM will free up internal RAM pages, after which C66x CorePac0 initiates the boot process. The C66x CorePac0 performs any authentication and decryption required on the bootloaded image prior to beginning execution.

The boot process performed by the C66x CorePac0 in public ROM boot and secure ROM boot are determined by the BOOTMODE[12:0] value in the DEVSTAT register. The C66x CorePac0 reads this value, and then executes the associated boot process in software. Figure 2-2 shows the bits associated with BOOTMODE[12:0].

Figure 2-2 Boot Mode Pin Decoding

Boot Mode Pins												
12	11	10	9	8	7	6	5	4	3	2	1	0
PLL Mult I^2C /SPI Ext Dev Cfg			Device Configuration							Boot Device		

Copyright 2014 Texas Instruments Incorporated

2.5.1 Boot Device Field

The Boot Device field BOOTMODE[2:0] defines the boot device that is chosen. Table 2-4 shows the supported boot modes.

Table 2-4 Boot Mode Pins: Boot Device Values

Bit	Field	Description
2-0	Boot Device	Device boot mode 0 = EMIF16 / No Boot 1 = Serial Rapid I/O 2 = Ethernet (SGMII) (PASS PLL configuration assumes input rate same as CORECLK(P|N); BOOTMODE[12:10] values drive the PASS PLL configuration during boot) 3 = Ethernet (SGMII) (PASS PLL configuration assumes input rate same as SRIOSGMIICLK(P|N); BOOTMODE[9:8] values drive the PASS PLL configuration during boot) 4 = PCIe 5 = I^2C 6 = SPI 7 = HyperLink
End of Table 2-4		

Internally, these boot modes are translated by RBL into the extended boot mode value that is used in the boot parameter table. Table 2-5 shows the details of extended boot mode values.

Table 2-5 Extended Boot Modes

Boot Type	Extended Boot Mode Value (Decimal)
Ethernet Boot Mode	10
SRIO Boot Mode	20
PCIe Boot Mode	30
I^2C Master Boot Mode	40
I^2C Passive Boot Mode	41
SPI Boot Mode	50
HyperLink Boot Mode	60
EMIF 16 Boot Mode	70
Sleep Boot Mode	100

Copyright 2014 Texas Instruments Incorporated

2.5.2 Device Configuration Field

The device configuration fields BOOTMODE[9:3] are used to configure the boot peripheral and, therefore, the bit definitions depend on the boot mode

2.5.2.1 No Boot/ EMIF16 Boot Device Configuration

Figure 2-3 No Boot/ EMIF16 Configuration Fields

9	8	7	6	5	4	3
Reserved		Wait Enable	Reserved	Sub-Mode		Reserved

Table 2-6 No Boot / EMIF16 Configuration Field Descriptions

Bit	Field	Description
9-8	Reserved	Reserved
7	Wait Enable	Extended Wait mode for EMIF16. 0 = Wait enable disabled (EMIF16 sub mode) 1 = Wait enable enabled (EMIF16 sub mode)
6	Reserved	Reserved
5-4	Sub-Mode	Sub mode selection. 0 = No boot 1 = EMIF16 boot 2 -3 = Reserved
3	Reserved	Reserved
End of Table 2-6		

2.5.2.2 Serial Rapid I/O Boot Device Configuration

The device ID is always set to 0xff (8-bit node IDs) or 0xffff (16 bit node IDs) at power-on reset.

Figure 2-4 Serial Rapid I/O Device Configuration Fields

9	8	7	6	5	4	3
Lane Setup	Data Rate		Ref Clock		Reserved	

Table 2-7 Serial Rapid I/O Configuration Field Descriptions

Bit	Field	Description
9	Lane Setup	SRIO port and lane configuration 0 = Port Configured as 4 ports each 1 lane wide (4 -1× ports) 1 = Port Configured as 2 ports 2 lanes wide (2 – 2× ports)
8-7	Data Rate	SRIO data rate configuration 0 = 1.25 GBaud 1 = 2.5 GBaud 2 = 3.125 GBaud 3 = 5.0 GBaud
6-5	Ref Clock	SRIO reference clock configuration 0 = 156.25 MHz 1 = 250 MHz 2 = 312.5 MHz 3 = Reserved
4-3	Reserved	Reserved
End of Table 2-7		

Copyright 2014 Texas Instruments Incorporated

In SRIO boot mode, the message mode will be enabled by default. If use of the memory reserved for received messages is required and reception of messages cannot be prevented, the master can disable the message mode by writing to the boot table and generating a boot restart.

2.5.2.3 Ethernet (SGMII) Boot Device Configuration

Figure 2-5 Ethernet (SGMII) Device Configuration Fields

9	8	7	6	5	4	3
SerDes Clock Mult		Ext connection		Device ID		

Table 2-8 Ethernet (SGMII) Configuration Field Descriptions

Bit	Field	Description
9-8	SerDes Clock Mult	SGMII SerDes input clock. The output frequency of the PLL must be 1.25 GBs. 0 = ×8 for input clock of 156.25 MHz 1 = ×5 for input clock of 250 MHz 2 = ×4 for input clock of 312.5 MHz 3 = Reserved
7-6	Ext connection	External connection mode 0 = MAC to MAC connection, master with auto negotiation 1 = MAC to MAC connection, slave, and MAC to PHY 2 = MAC to MAC, forced link 3 = MAC to fiber connection
5-3	Device ID	This value can range from 0 to 7 is used in the device ID field of the Ethernet-ready frame.
End of Table 2-8		

Note—Both of the SGMII ports have been initialized for boot. The device can boot through either of the ports. If only one SGMII port is used, then the other port will time out before the boot process completes.

2.5.2.4 PCI Boot Device Configuration

Extra device configuration is provided by the PCI bits in the DEVSTAT register.

Figure 2-6 PCI Device Configuration Fields

9	8	7	6	5	4	3
Reserved	BAR Config				Reserved	

Table 2-9 PCI Device Configuration Field Descriptions

Bit	Field	Description
9	Reserved	Reserved
8-5	BAR Config	PCIe BAR registers configuration This value can range from 0 to 0xf. See Table 2-10.
4-3	Reserved	Reserved
End of Table 2-9		

Table 2-10 BAR Config / PCIe Window Sizes

BAR cfg	BAR0	32-Bit Address Translation					64-Bit Address Translation	
		BAR1	BAR2	BAR3	BAR4	BAR5	BAR2/3	BAR4/5
0b0000	PCIe MMRs	32	32	32	32	Clone of BAR4		
0b0001		16	16	32	64			
0b0010		16	32	32	64			
0b0011		32	32	32	64			
0b0100		16	16	64	64			
0b0101		16	32	64	64			
0b0110		32	32	64	64			
0b0111		32	32	64	128			
0b1000		64	64	128	256			
0b1001		4	128	128	128			
0b1010		4	128	128	256			
0b1011		4	128	256	256			
0b1100							256	256
0b1101							512	512
0b1110							1024	1024
0b1111							2048	2048
End of Table 2-10								

2.5.2.5 I²C Boot Device Configuration

2.5.2.5.1 I²C Master Mode

In master mode, the I²C device configuration uses ten bits of device configuration instead of seven as used in other boot modes. In this mode, the device will make the initial read of the I²C EEPROM while the PLL is in bypass mode. The initial read will contain the desired clock multiplier, which will be set up prior to any subsequent reads.

Figure 2-7 I²C Master Mode Device Configuration Bit Fields

12	11	10	9	8	7	6	5	4	3
Reserved	Speed	Address	Mode		Parameter Index				

Table 2-11 I²C Master Mode Device Configuration Field Descriptions (Sheet 1 of 2)

Bit	Field	Description
12	Reserved	Reserved
11	Speed	I²C data rate configuration 0 = I²C slow mode. Initial data rate is CORECLK/5000 until PLLs and clocks are programmed 1 = I²C fast mode. Initial data rate is CORECLK/250 until PLLs and clocks are programmed
10	Address	I²C bus address configuration 0 = Boot from I²C EEPROM at I²C bus address 0x50 1 = Boot from I²C EEPROM at I²C bus address 0x51

Copyright 2014 Texas Instruments Incorporated

Table 2-11 I²C Master Mode Device Configuration Field Descriptions (Sheet 2 of 2)

Bit	Field	Description
9-8	Mode	I²C operation mode 0 = Master mode 3 = Passive mode (see section 2.5.2.5.2 "I²C Passive Mode") Others = Reserved
7-3	Parameter Table Index	Specifies which parameter table is loaded from I²C EEPROM. The boot ROM reads the parameter table (each table is 0x80 bytes) from the I²C EEPROM starting at I²C address (0x80 * parameter index). This value can range from 0 to 31.
End of Table 2-11		

2.5.2.5.2 I²C Passive Mode

In passive mode, the device does not drive the clock, but simply acks data received on the specified address.

Figure 2-8 I²C Passive Mode Device Configuration Bit Fields

9	8	7	6	5	4	3
Mode		Receive I²C Address			Reserved	

Table 2-12 I²C Passive Mode Device Configuration Field Descriptions

Bit	Field	Description
9-8	Mode	I²C operation mode 0 = Master mode (see section 2.5.2.5.1 "I²C Master Mode") 3 = Passive mode Others = Reserved
7-5	Receive I²C Address	I²C bus address configuration 0 - 7h= The I²C Bus address the device will listen to for data The actual value on the bus is 0x19 plus the value in bits [7:5]. For Ex. if bits[7:5] = 0 then the device will listen to I²C bus address 0x19.
4-3	Reserved	Reserved
End of Table 2-12		

2.5.2.6 SPI Boot Device Configuration

In SPI boot mode, the SPI device configuration uses ten bits of device configuration instead of seven as used in other boot modes.

Figure 2-9 SPI Device Configuration Bit Fields

12	11	10	9	8	7	6	5	4	3
Mode		4, 5 Pin	Addr Width	Chip Select		Parameter Table Index			

Table 2-13 SPI Device Configuration Field Descriptions (Sheet 1 of 2)

Bit	Field	Description
12-11	Mode	Clk Pol / Phase 0 = Data is output on the rising edge of SPICLK. Input data is latched on the falling edge. 1 = Data is output one half-cycle before the first rising edge of SPICLK and on subsequent falling edges. Input data is latched on the rising edge of SPICLK. 2 = Data is output on the falling edge of SPICLK. Input data is latched on the rising edge. 3 = Data is output one half-cycle before the first falling edge of SPICLK and on subsequent rising edges. Input data is latched on the falling edge of SPICLK.

Copyright 2014 Texas Instruments Incorporated

Table 2-13 SPI Device Configuration Field Descriptions (Sheet 2 of 2)

Bit	Field	Description
10	4, 5 Pin	SPI operation mode configuration 0 = 4-pin mode used 1 = 5-pin mode used
9	Addr Width	SPI address width configuration 0 = 16-bit address values are used 1 = 24-bit address values are used
8-7	Chip Select	The chip select field value 00b = CS0 and CS1 are both active (not used) 01b = CS1 is active 10b = CS0 is active 11b = None is active
6-3	Parameter Table Index	Specifies which parameter table is loaded from SPI. The boot ROM reads the parameter table (each table is 0x80 bytes) from the SPI starting at SPI address (0x80 * parameter index). The value can range from 0 to 15.
End of Table 2-13		

2.5.2.7 HyperLink Boot Device Configuration

Figure 2-10 HyperLink Boot Device Configuration Fields

9	8	7	6	5	4	3
Reserved	Data Rate		Ref Clock		Reserved	

Table 2-14 HyperLink Boot Device Configuration Field Descriptions

Bit	Field	Description
9	Reserved	Reserved
8-7	Data Rate	HyperLink data rate configuration 0 = 1.25 GBaud 1 = 3.125 GBaud 2 = 6.25 GBaud 3 = Reserved
6-5	Ref Clocks	HyperLink reference clock configuration 0 = 156.25 MHz 1 = 250 MHz 2 = 312.5 MHz 3 = Reserved
4-3	Reserved	Reserved
End of Table 2-14		

Copyright 2014 Texas Instruments Incorporated

2.5.3 Boot Parameter Table

The ROM Bootloader (RBL) uses a set of tables to carry out the boot process. The boot parameter table is the most common format the RBL employs to determine the boot flow. These boot parameter tables have certain parameters common across all the boot modes, while the rest of the parameters are unique to the boot modes. The common entries in the boot parameter table are shown in the table below:

Table 2-15 Boot Parameter Table Common Parameters

Byte Offset	Name	Description
0	Length	The length of the table, including the length field, in bytes.
2	Checksum	The 16 bits ones complement of the ones complement of the entire table. A value of 0 will disable checksum verification of the table by the boot ROM.
4	Boot Mode	Internal values used by RBL for different boot modes.
6	Port Num	Identifies the device port number to boot from, if applicable
8	SW PLL, MSW	PLL configuration, MSW
10	SW PLL, LSW	PLL configuration, LSW
End of Table 2-15		

2.5.3.1 EMIF16 Boot Parameter Table

Table 2-16 EMIF16 Boot Mode Parameter Table

Byte Offset	Name	Description	Configured Through Boot Configuration Pins
12	Options	Option for EMIF16 boot (currently none)	-
14	Type	Boot only from NOR flash is supported for C6678	-
16	Branch Address MSW	Most significant bit for Branch address (depends on chip select)	-
18	Branch Address LSW	Least significant bit for Branch address (depends on chip select)	-
20	Chip Select	Chip Select for the NOR flash	-
22	Memory Width	Memory width of the Emif16 bus (16 bits)	-
24	Wait Enable	Extended wait mode enabled 0 = Wait enable is disabled 1 = Wait enable is enabled	YES
End of Table 2-16			

2.5.3.2 SRIO Boot Parameter Table

Table 2-17 SRIO Boot Mode Parameter Table

Byte Offset	Name	Description	Configured Through Boot Configuration Pins
12	Options	Bit 0 TX enable 0 = SRIO transmit disable 1 = SRIO transmit enable Bit 1 Mailbox enable 0 = Mailbox mode disabled. SRIO boot is in directIO mode). 1 = Mailbox mode enabled. SRIO boot is in messaging mode). Bit 2 Bypass configuration 0 = Configure the SRIO 1 = Bypass SRIO configuration Bit 15-3 = Reserved	-
14	Lane Setup	SRIO lane setup 0 = SRIO configured as 4 1x ports 1 = SRIO configured as 3 ports (2x, 1x, 1x) 2 = SRIO configured as 3 ports (1x, 1x, 2x) 3 = SRIO configured as 2 ports (2x, 2x) 4 = SRIO configured as 1 4x port Others = Reserved	YES (but not all lane setup are possible through the boot configuration pins)
16	Config Index	Specifies the template used for RapidIO configuration. Must be 0 for KeyStone architecture	-
18	Node ID	The node ID value to set for this device	-
20	SerDes ref clk	The SerDes reference clock frequency, in 1/100 MHz	YES
22	Link Rate	Link rate, MHz	YES
24	PF Low	Packet forward address range, low value	-
26	PF High	Packet forward address range, high value	-
End of Table 2-17			

2.5.3.3 Ethernet Boot Parameter Table

Table 2-18 Ethernet Boot Mode Parameter Table (Sheet 1 of 2)

Byte Offset	Name	Description	Configured Through Boot Configuration Pins
12	Options	Bits 2-0 Interface 101b = SGMII Others = Reserved Bit 3 Half or Full duplex 0 = Half Duplex 1 = Full Duplex Bit 4 Skip TX 0 = Send Ethernet ready frame every 3 seconds 1 = Don't send Ethernet ready frame Bits 6-5 Initialize config 00b = Switch, SerDes, SGMII and PASS are configured 01b = Only SGMII and PASS are configured 10b= Reserved 11b = None of the Ethernet system is configured. Bits 15-7 = Reserved	-
14	MAC High	The 16 MSBs of the MAC address to receive during boot	-
16	MAC Med	The 16 middle bits of the MAC address to receive during boot	-

Copyright 2014 Texas Instruments Incorporated

Table 2-18 Ethernet Boot Mode Parameter Table (Sheet 2 of 2)

Byte Offset	Name	Description	Configured Through Boot Configuration Pins
18	MAC Low	The 16 LSBs of the MAC address to receive during boot	-
20	Multi MAC High	The 16 MSBs of the multi-cast MAC address to receive during boot	-
22	Multi MAC Med	The 16 middle bits of the multi-cast MAC address to receive during boot	-
24	Multi MAC Low	The 16 LSBs of the multi-cast MAC address to receive during boot	-
26	Source Port	The source UDP port to accept boot packets from. A value of 0 will accept packets from any UDP port	-
28	Dest Port	The destination port to accept boot packets on.	-
30	Device ID 12	The first two bytes of the device ID. This is typically a string value, and is sent in the Ethernet ready frame	-
32	Device ID 34	The 2nd two bytes of the device ID.	-
34	Dest MAC High	The 16 MSBs of the MAC destination address used for the Ethernet ready frame. Default is broadcast.	-
36	Dest MAC Med	The 16 middle bits of the MAC destination address	-
38	Dest MAC Low	The 16 LSBs of the MAC destination address	-
40	SGMII Config	Bits 3-0 are the config index Bit 4 set if direct config used Bit 5 set if no configuration done Bits 15-6 Reserved	-
42	SGMII Control	The SGMII control register value	-
44	SGMII Adv Ability	The SGMII ADV Ability register value	-
46	SGMII TX Cfg High	The 16 MSBs of the SGMII TX config register	-
48	SGMII TX Cfg Low	The 16 LSBs of the SGMII TX config register	-
50	SGMII RX Cfg High	The 16 MSBs of the SGMII RX config register	-
52	SGMII RX Cfg Low	The 16 LSBs of the SGMII RX config register	-
54	SGMII Aux Cfg High	The 16 MSBs of the SGMII Aux config register	-
56	SGMII Aux Cfg Low	The 16 LSBs of the SGMII Aux config register	-
58	PKT PLL Cfg MSW	The packet subsystem PLL configuration, MSW	-
60	PKT PLL CFG LSW	The packet subsystem PLL configuration, LSW	-

End of Table 2-18

2.5.3.4 PCIe Boot Parameter Table

Table 2-19 PCIe Boot Mode Parameter Table

Byte Offset	Name	Description	Configured Through Boot Configuration Pins
12	Options	Bit 0 Mode 0 = Host mode (direct boot mode) 1 = Boot table boot mode Bit 1 Configuration of PCIe 0 = PCIe is configured by RBL 1 = PCIe is not configured by RBL Bits 3-2 Reserved Bit 4 Multiplier 0 = SerDes PLL configuration is done based on SerDes register values 1 = SerDes PLL configuration based on the reference clock values Bits 15-5 Reserved	-
14	Address Width	PCI address width, can be 32 or 64	-
16	Link Rate	SerDes frequency, in Mbps. Can be 2500 or 5000	-
18	Reference clock	Reference clock frequency, in units of 10 kHz. Value values are 10000 (100 MHz), 12500 (125 MHz), 15625 (156.25 MHz), 25000 (250 MHz), and 31250 (312.5 MHz). A value of 0 means that value is already in the SerDes configuration parameters and will not be computed by the boot ROM.	-
20	Window 1 Size	Window 1 size.	YES
22	Window 2 Size	Window 2 size.	YES
24	Window 3 Size	Window 3 size. Valid only if address width is 32.	YES
26	Window 4 Size	Window 4 Size. Valid only if the address width is 32.	YES
28	Vendor ID	Vendor ID	-
30	Device ID	Device ID	-
32	Class code Rev ID MSW	Class code revision ID MSW	-
34	Class code Rev ID LSW	Class code revision ID LSW	-
36	SerDes Cfg MSW	PCIe SerDes config word, MSW	-
38	SerDes Cfg LSW	PCIe SerDes config word, LSW	-
40	SerDes lane 0 Cfg MSW	SerDes lane config word, MSW, lane 0	-
42	SerDes lane 0 Cfg LSW	SerDes lane config word, LSW, lane 0	-
44	SerDes lane 1 Cfg MSW	SerDes lane config word, MSW, lane 1	-
46	SerDes lane 1 Cfg LSW	SerDes lane config word, LSW, lane 1	-
End of Table 2-19			

2.5.3.5 I²C Boot Parameter Table

Table 2-20 I²C Boot Mode Parameter Table (Sheet 1 of 2)

Byte Offset	Name	Description	Configured Through Boot Configuration Pins
12	Option	Bits 1-0 Mode 00b = Boot Parameter Table Mode 01b = Boot Table Mode 10b = Boot Config Mode 11b = Slave Receive Boot Config Bits 15-2 Reserved	YES
14	Boot Dev Addr	The I²C device address to boot from	YES
16	Boot Dev Addr Ext	Extended boot device address	YES

Copyright 2014 Texas Instruments Incorporated

Table 2-20 I^2C Boot Mode Parameter Table (Sheet 2 of 2)

Byte Offset	Name	Description	Configured Through Boot Configuration Pins
18	Broadcast Addr	I^2C address used to send data in the I^2C master broadcast mode.	-
20	Local Address	The I^2C address of this device	-
22	Device Freq	The operating frequency of the device (MHz)	-
24	Bus Frequency	The desired I^2C data rate (kHz)	YES
26	Next Dev Addr	The next device address to boot (Used only if boot config option is selected)	-
28	Next Dev Addr Ext	The extended next device address to boot (Used only if boot config option is selected)	-
30	Address Delay	The number of CPU cycles to delay between writing the address to an I^2C EEPROM and reading data.	-
End of Table 2-20			

2.5.3.6 SPI Boot Parameter Table

Table 2-21 SPI Boot Mode Parameter Table

Byte Offset	Name	Description	Configured Through Boot Configuration Pins
12	Options	Bits 1-0 Modes 00b = Load a boot parameter table from the SPI (Default mode) 01b = Load boot records from the SPI (boot tables) 10b = Load boot config records from the SPI (boot config tables) 11b = Reserved Bits 15-2 Reserved	-
14	Address Width	The number of bytes in the SPI device address. Can be 16 or 24 bit.	YES
16	NPin	The operational mode, 4 or 5 pin	YES
18	Chipsel	The chip select used (valid in 4-pin mode only). Can be 0-3.	YES
20	Mode	Standard SPI mode (0-3)	YES
22	C2Delay	Setup time between chip assert and transaction	-
24	CPU Freq MHz	The speed of the CPU, in MHz	-
26	Bus Freq, MHz	The MHz portion of the SPI bus frequency. Default = 5 MHz	-
28	Bus Freq, kHz	The kHz portion of the SPI buf frequency. Default = 0	-
30	Read Addr MSW	The first address to read from, MSW (valid for 24-bit address width only)	YES
32	Read Addr LSW	The first address to read from, LSW	YES
28	Next Chip Select	Next Chip Select to be used (Used only in boot config mode)	-
30	Next Read Addr MSW	The Next read address (used in boot config mode only)	-
32	Next Read Addr LSW	The Next read address (used in boot config mode only)	-
End of Table 2-21			

Copyright 2014 Texas Instruments Incorporated

2.5.3.7 HyperLink Boot Parameter Table

Table 2-22 HyperLink Boot Mode Parameter Table

Byte Offset	Name	Description	Configured Through Boot Configuration Pins
12	Options	Bit 0 Mode 0 = Host Mode (Direct boot mode) 1 = Boot Table Boot Mode Bit 1 Configuration of PCIe 0 = HyperLink is configured by RBL 1 = HyperLink is not configured by RBL Bits 15-2 Reserved	-
14	Number of Lanes	Number of lanes to be configured	-
16	SerDes cfg msw	HyperLink SerDes config word, MSW	-
18	SerDes cfg lsw	HyperLink SerDes config word, LSW	-
20	SerDes CFG RX lane 0 cfg msw	SerDes RX lane config word, MSW lane 0	-
22	SerDes CFG RXlane 0 cfg lsw	SerDes RX lane config word, LSW, lane 0	-
24	SerDes CFG TX lane 0 cfg msw	SerDes TX lane config word, MSW lane 0	-
26	SerDes CFG TXlane 0 cfg lsw	SerDes TX lane config word, LSW, lane 0	-
28	SerDes CFG RX lane 1 cfg msw	SerDes RX lane config word, MSW lane 1	-
30	SerDes CFG RXlane 1 cfg lsw	SerDes RX lane config word, LSW, lane 1	-
32	SerDes CFG TX lane 1 cfg msw	SerDes TX lane config word, MSW lane 1	-
34	SerDes CFG TXlane 1 cfg lsw	SerDes TX lane config word, LSW, lane 1	-
36	SerDes CFG RX lane 2 cfg msw	SerDes RX lane config word, MSW lane 2	-
38	SerDes CFG RXlane 2 cfg lsw	SerDes RX lane config word, LSW, lane 2	-
40	SerDes CFG TX lane 2 cfg msw	SerDes TX lane config word, MSW lane 2	-
42	SerDes CFG TXlane 2 cfg lsw	SerDes TX lane config word, LSW, lane 2	-
44	SerDes CFG RX lane 3 cfg msw	SerDes RX lane config word, MSW lane 3	-
46	SerDes CFG RXlane 3 cfg lsw	SerDes RX lane config word, LSW, lane 3	-
48	SerDes CFG TX lane 3 cfg msw	SerDes TX lane config word, MSW lane 3	-
50	SerDes CFG TXlane 3 cfg lsw	SerDes TX lane config word, LSW, lane 3	-
End of Table 2-22			

Copyright 2014 Texas Instruments Incorporated

2.5.3.8 DDR3 Configuration Table

The ROM Bootloader (RBL) also provides an option to configure the DDR table before loading the image into the external memory. More information on how to configure the DDR3, see the *DSP Bootloader for KeyStone Devices User Guide* in "Related Documentation from Texas Instruments" on page 72 for more details. The configuration table for DDR3 is shown below:

Table 2-23 DDR3 Boot Parameter Table

Byte Offset	Name	Description	Configured Through Boot Configuration Pins
0	configselect	Selecting the configuration register below that to be set. Each field below is represented by one bit, each.	-
4	pllprediv	PLL pre divider value (Should be the exact value not value -1)	-
8	pllMult	PLL Multiplier value (Should be the exact value not value -1)	-
12	pllPostDiv	PLL post divider value (Should be the exact value not value -1)	-
16	sdRamConfig	SDRAM config register	-
20	sdRamConfig2	SDRAM Config register	-
24	sdRamRefreshctl	SDRAM Refresh Control Register	-
28	sdRamTiming1	SDRAM Timing 1 Register	-
32	sdRamTiming2	SDRAM Timing 2 Register	-
36	sdRamTiming3	SDRAM Timing 3 Register	-
40	lpDfrNvmTiming	LP DDR2 NVM Timing Register	-
44	powerMngCtl	Power management Control Register	-
48	iODFTTestLogic	IODFT Test Logic Global Control Register	-
52	performCountCfg	Performance Counter Config Register	-
56	performCountMstRegSel	Performance Counter Master Region Select Register	-
60	readIdleCtl	Read IDLE counter Register	-
64	sysVbusmIntEnSet	System Interrupt Enable Set Register	-
68	sdRamOutImpdedCalcfg	SDRAM Output Impedance Calibration Config Register	-
72	tempAlertCfg	Temperature Alert Configuration Register	-
76	ddrPhyCtl1	DDR PHY Control Register 1	-
80	ddrPhyCtl2	DDR PHY Control Register 1	-
84	proClassSvceMap	Priority to Class of Service mapping Register	-
88	mstId2ClsSvce1Map	Master ID to Class of Service Mapping 1 Register	-
92	mstId2ClsSvce2Map	Master ID to Class of Service Mapping 2Register	-
96	eccCtl	ECC Control Register	-
100	eccRange1	ECC Address Range1 Register	-
104	eccRange2	ECC Address Range2 Register	-
108	rdWrtExcThresh	Read Write Execution Threshold Register	-
End of Table 2-23			

2.5.4 PLL Boot Configuration Settings

The PLL default settings are determined by the BOOTMODE[12:10] bits. The table below shows settings for various input clock frequencies.

Table 2-24 C66x DSP System PLL Configuration [1]

BOOTMODE [12:10]	Input Clock Freq (MHz)	800 MHz Device			1000 MHz Device			1200 MHz Device			1250 MHz Device			PASS PLL = 350 MHz [2]		
		PLLD	PLLM	DSP Freq (MHz)	PLLD	PLLM	DSP Freq (MHz)	PLLD	PLLM	DSP Freq (MHz)	PLLD	PLLM	DSP Freq (MHz)	PLLD	PLLM	DSP Freq (MHz)
0b000	50.00	0	31	800	0	39	1000	0	47	1200	0	49	1250	0	41	1050
0b001	66.67	0	23	800.04	0	29	1000.05	0	35	1200.06	1	74	1250.06	1	62	1050.053
0b010	80.00	0	19	800	0	24	1000	0	29	1200	3	124	1250	3	104	1050
0b011	100.00	0	15	800	0	19	1000	0	23	1200	0	24	1250	0	20	1050
0b100	156.25	24	255	800	4	63	1000	24	383	1200	0	15	1250	24	335	1050
0b101	250.00	4	31	800	0	7	1000	4	47	1200	0	9	1250	4	41	1050
0b110	312.50	24	127	800	4	31	1000	24	191	1200	0	7	1250	24	167	1050
0b111	122.88	47	624	800	28	471	999.989	31	624	1200	2	60	1249.28	11	204	1049.6

End of Table 2-24

1 The PLL boot configuration of initial silicon 1.0 may support only 800 MHz, 1000 MHz, and 1200 MHz frequencies by default.
2 The PASS PLL generates 1050 MHz and is internally divided by 3 to supply 350 MHz to the packet accelerator.

OUTPUT_DIVIDE is the value of the field of SECCTL[22:19]. This will set the PLL to the maximum clock setting for the device (with OUTPUT_DIVIDE=1, by default).

$$CLK = CLKIN \times ((PLLM+1) \div ((OUTPUT_DIVIDE+1) \times (PLLD+1)))$$

The configuration for the PASS PLL is also shown. The PASS PLL is configured with these values only if the Ethernet boot mode is selected with the input clock set to match the main PLL clock (not the PASS clock). See Table 2-4 for details on configuring Ethernet boot mode. The output from the PASS PLL goes through an on-chip divider to reduce the operating frequency before reaching the NETCP. The PASS PLL generates 1050 MHz, and after the chip divider (=3), feeds 350 MHz to the NETCP.

The Main PLL is controlled using a PLL controller and a chip-level MMR. The DDR3 PLL and PASS PLL are controlled by chip level MMRs. For details on how to set up the PLL see section 7.6 "Main PLL and PLL Controller" on page 140. For details on the operation of the PLL controller module, see the *Phase Locked Loop (PLL) for KeyStone Devices User Guide* in "Related Documentation from Texas Instruments" on page 72.

2.6 Second-Level Bootloaders

Any of the boot modes can be used to download a second-level bootloader. A second-level bootloader allows for any level of customization to current boot methods as well as the definition of a completely customized boot.

Copyright 2014 Texas Instruments Incorporated

2.7 Terminals

2.7.1 Package Terminals

Figure 2-11 shows the TMS320C6678CYP ball grid area (BGA) package (bottom view).

Figure 2-11 CYP 841-Pin BGA Package (Bottom View)

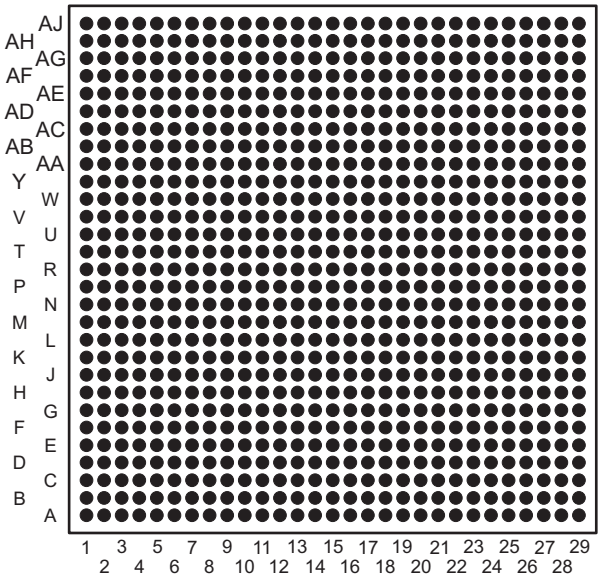

2.7.2 Pin Map

Figure 2-13 through Figure 2-16 show the TMS320C6678 pin assignments in four quadrants (A, B, C, and D).

Figure 2-12 Pin Map Quadrants (Bottom View)

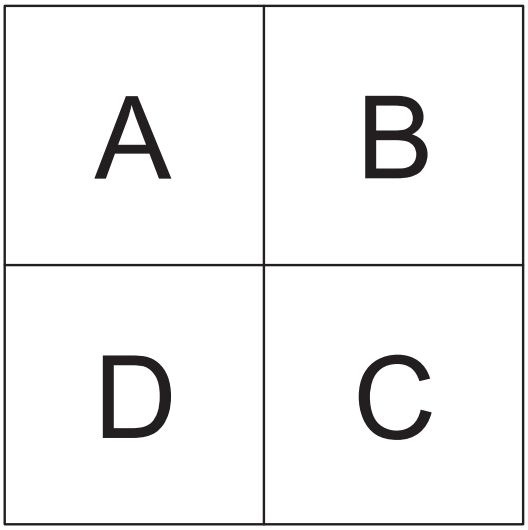

Figure 2-13 Upper Left Quadrant—A (Bottom View)

	1	2	3	4	5	6	7	8	9	10	11	12	13	14	15
AJ	VSS	DVDD18	RSV05	PASSCLKN	PASSCLKP	SRIOSGMII CLKN	VSS	PCIERXP1	PCIERXN1	VSS	RIORXN0	RIORXP0	VSS	RIORXP3	RIORXN3
AH	DVDD18	RSV04	RSV25	RSV24	PCIECLKN	VSS	PCIERXN0	PCIERXP0	VSS	RIORXN1	RIORXP1	VSS	RIORXP2	RIORXN2	VSS
AG	SPISCS0	SPISCS1	CORECLKP	CORECLKN	PCIECLKP	SRIOSGMII CLKP	VSS	PCIETXP1	PCIETXN1	VSS	RIOTXN1	RIOTXP1	VSS	RIOTXP2	RIOTXN2
AF	RSV22	CORESEL0	RSV20	VSS	DVDD18	VSS	PCIETXP0	PCIETXN0	VSS	RIOTXN0	RIOTXP0	VSS	RIOTXP3	RIOTXN3	VSS
AE	SPICLK	BOOT COMPLETE	SYSCLKOUT	PACLKSEL	CORESEL3	CORESEL2	VSS	VSS	VSS	VDDR2	VSS	RSV15	VSS	VDDR4	VSS
AD	UARTRXD	SPIDIN	SCL	CORESEL1	AVDDA3	VSS	VDDT2	VSS	VDDT2	VSS	VDDT2	VSS	VDDT2	VSS	VDDT2
AC	UARTTXD	VSS	DVDD18	SDA	VSS	AVDDA2	VSS	VDDT2	RSV16	VDDT2	VSS	VDDT2	VSS	VDDT2	VSS
AB	SPIDOUT	UARTRTS	UARTCTS	VSS	DVDD18	VSS	DVDD18	VSS	VDDT2	VSS	VDDT2	VSS	VDDT2	VSS	VDDT2
AA	MCMTX FLCLK	MCMTX PMCLK	MCMTX FLDAT	MCMTX PMDAT	VSS	DVDD18	VSS	CVDD	VSS	CVDD	VSS	CVDD	VSS	CVDD	VSS
Y	MCMREF CLKOUTP	MCMCLKN	MCMRX PMCLK	MCMRX PMDAT	RSV12	VSS	DVDD18	VSS	CVDD	VSS	CVDD	VSS	CVDD	VSS	CVDD
W	MCMREF CLKOUTN	MCMCLKP	MCMRX FLCLK	MCMRX FLDAT	RSV13	RSV14	VSS	CVDD	VSS	CVDD	VSS	CVDD1	VSS	CVDD1	VSS
V	VSS	VSS	VSS	VSS	VDDR1	VSS	VDDT1	VSS	CVDD	VSS	CVDD	VSS	CVDD1	VSS	CVDD1
U	VSS	MCMRXN0	VSS	MCMTXP1	VSS	VDDT1	VSS	CVDD	VSS	CVDD	VSS	CVDD1	VSS	CVDD1	VSS
T	MCMRXN1	MCMRXP0	VSS	MCMTXN1	MCMTXP2	VSS	VDDT1	VSS	CVDD	VSS	CVDD	VSS	CVDD	VSS	CVDD

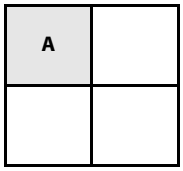

Copyright 2014 Texas Instruments Incorporated

Figure 2-14 Upper Right Quadrant—B (Bottom View)

16	17	18	19	20	21	22	23	24	25	26	27	28	29	
VSS	SGMII0RXP	SGMII0RXN	VSS	TR15	TR13	FSB1	CLKA1	TX02	TR01	FSA0	EMU16	DVDD18	VSS	AJ
SGMII1RXP	SGMII1RXN	VSS	RSV08	TX16	TR16	TR14	CLKB1	TX04	TR05	TR00	EMU18	RSV01	DVDD18	AH
VSS	SGMII0TXP	SGMII0TXN	VSS	TX14	TR17	DVDD18	FSA1	TX03	CLKB0	FSB0	EMU15	EMU14	EMU12	AG
SGMII1TXP	SGMII1TXN	VSS	RSV09	TX17	TX10	VSS	TX07	TX05	CLKA0	DVDD18	EMU17	EMU11	EMU09	AF
VDDR3	VSS	VDDT2	VSS	TX15	TX13	TR10	TX06	TX00	TR07	VSS	EMU10	EMU08	EMU07	AE
VSS	VDDT2	VSS	RSV17	HOUT	TR11	TX11	TR02	TR03	TX01	EMU13	EMU06	EMU05	EMU04	AD
VDDT2	VSS	VDDT2	VSS	$\overline{\text{POR}}$	TR12	TX12	TR04	TR06	EMIFD15	EMU03	EMU02	EMU01	EMU00	AC
VSS	VDDT2	VSS	DVDD18	VSS	DVDD18	VSS	EMIFD12	EMIFD13	EMIFD09	EMIFD14	EMIFD05	DVDD18	EMIFD01	AB
CVDD	VSS	CVDD	VSS	RSV0B	RSV0A	CVDD	VSS	EMIFD10	EMIFD07	EMIFD06	EMIFD04	VSS	EMIFD02	AA
VSS	CVDD	VSS	CVDD	VSS	CVDD	VSS	DVDD18	EMIFD11	EMIFD08	EMIFD03	EMIFD00	EMIFA22	EMIFA21	Y
CVDD1	VSS	CVDD	VSS	CVDD	VSS	CVDD	EMIFA20	EMIFA19	EMIFA18	EMIFA17	EMIFA15	EMIFA14	EMIFA16	W
VSS	CVDD	VSS	CVDD	VSS	CVDD	VSS	DVDD18	EMIFA13	EMIFA12	EMIFA11	EMIFA10	EMIFA08	EMIFA09	V
CVDD1	VSS	CVDD	VSS	CVDD	VSS	CVDD	EMIFA23	EMIFA07	EMIFA06	DVDD18	EMIFA04	EMIFA05	EMIFA02	U
VSS	CVDD	VSS	CVDD	VSS	CVDD	VSS	DVDD18	EMIFA01	EMIFA03	VSS	EMIFA00	EMIFWAIT1	EMIFWAIT0	T

	B

Figure 2-15 Lower Right Quadrant—C (Bottom View)

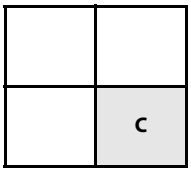

CVDD1	VSS	CVDD	VSS	CVDD	VSS	CVDD	EMIFBE1	EMIFBE0	EMIFCE3	EMIFOE	EMIFCE1	EMIFCE2	TDO	R
VSS	CVDD	VSS	CVDD	VSS	CVDD	VSS	DVDD18	EMIFWE	EMIFCE0	EMIFRW	TDI	TRST	TMS	P
CVDD	VSS	CVDD	VSS	CVDD1	VSS	CVDD1	RSV03	RSV02	RESETFULL	LRESET	RESETSTAT	DVDD18	TCK	N
VSS	CVDD	VSS	CVDD	VSS	CVDD1	VSS	RSV26	RSV27	NMI	TIMO1	LRESET NMIEN	VSS	RESET	M
CVDD	VSS	CVDD	VSS	CVDD1	VSS	CVDD1	VCNTL0	TIMI0	TIMO0	TIMI1	GPIO15	GPIO11	GPIO12	L
VSS	CVDD	VSS	CVDD	VSS	CVDD	RSV10	VCNTL1	GPIO14	GPIO13	GPIO09	GPIO07	GPIO08	GPIO10	K
CVDD	VSS	CVDD	VSS	CVDD	VSS	RSV11	VCNTL2	GPIO06	GPIO04	GPIO03	GPIO05	GPIO01	GPIO02	J
VSS	CVDD	VSS	CVDD	VSS	CVDD	AVDDA1	VCNTL3	DVDD18	GPIO00	MDCLK	DDRSL RATE1	RSV06	DDRCLKN	H
DVDD15	VSS	DVDD15	VSS	DVDD15	VSS	PTV15	DVDD15	VSS	RSV21	MDIO	DDRSL RATE0	RSV07	DDRCLKP	G
VSS	DVDD15	VSS	DVDD15	DDRD25	DDRD27	DDRD17	DDRD16	DDRD08	DDRD07	DVDD15	VSS	DVDD15	VSS	F
DDRA10	DDRA12	DDRCKE1	DDRCB00	VSS	DDRD26	DDRD23	DDRD19	DDRD09	DDRD10	DDRD06	DDRD02	DDRD00	DDRDQM0	E
DDRA11	DDRA14	VSS	DDRCB02	DVDD15	DDRD24	DDRD28	DVDD15	DDRD18	DDRD11	DDRD12	DDRD04	DDRD03	DDRD01	D
DDRA13	DDRA15	DDRCB05	DDRCB04	DDRCB01	DDRD29	DDRD31	VSS	DDRD22	DVDD15	DDRD13	DDRDQM1	DDRDQS0P	DDRDQS0N	C
DDRCLK OUTN1	VSS	DDRCB06	DDRDQS8N	DDRCB03	DDRDQS3N	DDRD30	DDRD21	DDRDQS2N	VSS	DDRD14	DDRDQS1N	DDRD05	DVDD15	B
DDRCLK OUTP1	DVDD15	DDRCB07	DDRDQS8P	DDRDQM8	DDRDQS3P	DDRDQM3	DDRD20	DDRDQS2P	DDRDQM2	DDRD15	DDRDQS1P	DVDD15	VSS	A
16	17	18	19	20	21	22	23	24	25	26	27	28	29	

Copyright 2014 Texas Instruments Incorporated

Figure 2-16 Lower Left Quadrant—D (Bottom View)

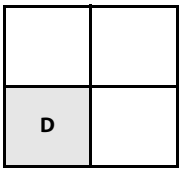

	1	2	3	4	5	6	7	8	9	10	11	12	13	14	15
R	MCMRXP1	VSS	VSS	VSS	MCMTXN2	VDDT1	VSS	CVDD	VSS	CVDD	VSS	CVDD1	VSS	CVDD1	VSS
P	VSS	MCMRXN3	VSS	MCMTXP3	VSS	VSS	VDDT1	VSS	CVDD	VSS	CVDD	VSS	CVDD	VSS	CVDD
N	MCMRXP2	MCMRXP3	VSS	MCMTXN3	MCMTXP0	VDDT1	VSS	CVDD	VSS	CVDD	VSS	CVDD	VSS	CVDD	VSS
M	MCMRXN2	VSS	VSS	VSS	MCMTXN0	VSS	VDDT1	VSS	CVDD1	VSS	CVDD	VSS	CVDD	VSS	CVDD
L	VSS	VSS	VSS	VSS	VSS	VSS	VSS	CVDD1	VSS	CVDD	VSS	CVDD	VSS	CVDD1	VSS
K	VSS	VSS	VSS	VSS	VSS	VSS	CVDD1	VSS	CVDD1	VSS	CVDD	VSS	CVDD1	VSS	CVDD1
J	VSS	VSS	VSS	VSS	VSS	VSS	VSS	CVDD1	VSS	CVDD	VSS	CVDD	VSS	CVDD1	VSS
H	VSS	VSS	VSS	VSS	VSS	VSS	CVDD	VSS	CVDD	VSS	CVDD	VSS	CVDD	VSS	CVDD
G	VSS	DVDD15	VSS	DVDD15	VSS	VSS	VSS	DVDD15	VSS	DVDD15	VSS	DVDD15	VSS	DVDD15	VSS
F	DDRD63	DDRD60	DDRD61	DDRD56	DVDD15	VSS	DVDD15	VSS	DVDD15	VSS	DVDD15	VSS	DDRA03	DDRA02	DDRA08
E	DDRD62	DDRD58	DVDD15	DDRD53	VSS	DDRD45	DDRD42	DDRD39	DDRD36	DDRD32	$\overline{\text{DDRRESET}}$	$\overline{\text{DDRWE}}$	DDRODT1	VREFSSTL	DDRA09
D	DDRDQS7P	DDRD57	VSS	DDRD52	DVDD15	DDRD46	DDRD41	DVDD15	DDRD35	DDRD33	DDRCKE0	$\overline{\text{DDRCAS}}$	DDRODT0	VSS	DDRA07
C	DDRDQS7N	DDRD59	DDRD55	DDRD54	DDRD48	DDRD47	DDRD43	VSS	DDRD37	$\overline{\text{DDRRAS}}$	$\overline{\text{DDRCE0}}$	$\overline{\text{DDRCE1}}$	DDRBA2	DVDD15	DDRA05
B	DVDD15	DDRDQM7	DDRDQS6P	DDRD50	DDRDQM6	DDRDQS5P	DDRD44	DDRD38	DDRDQS4N	DDRD34	VSS	DDRCLK OUTN0	DDRBA1	DDRA01	DDRA06
A	VSS	DVDD15	DDRDQS6N	DDRD51	DDRD49	DDRDQS5N	DDRD40	DDRDQM5	DDRDQS4P	DDRDQM4	DVDD15	DDRCLK OUTP0	DDRBA0	DDRA00	DDRA04

2.8 Terminal Functions

The terminal functions table (Table 2-26) identifies the external signal names, the associated pin (ball) numbers, the pin type (I, O/Z, or I/O/Z), whether the pin has any internal pullup/pulldown resistors, and gives functional pin descriptions. This table is arranged by function. The power terminal functions table (Table 2-27) lists the various power supply pins and ground pins and gives functional pin descriptions. Table 2-28 shows all pins arranged by signal name. Table 2-29 shows all pins arranged by ball number.

There are 17 pins that have a secondary function as well as a primary function. The secondary function is indicated with a dagger (†).

For more detailed information on device configuration, peripheral selection, multiplexed/shared pins, and pullup/pulldown resistors, see section 3.4 "Pullup/Pulldown Resistors" on page 97.

Use the symbol definitions in Table 2-25 when reading Table 2-26.

Table 2-25 I/O Functional Symbol Definitions

Functional Symbol	Definition	Table 2-26 Column Heading
IPD or IPU	Internal 100-µA pulldown or pullup is provided for this terminal. In most systems, a 1-kΩ resistor can be used to oppose the IPD/IPU. For more detailed information on pulldown/pullup resistors and situations in which external pulldown/pullup resistors are required, see the *Hardware Design Guide for KeyStone I Devices* in "Related Documentation from Texas Instruments" on page 72.	IPD/IPU
A	Analog signal	Type
GND	Ground	Type
I	Input terminal	Type
O	Output terminal	Type
S	Supply voltage	Type
Z	Three-state terminal or high impedance	Type
End of Table 2-25		

Table 2-26 Terminal Functions — Signals and Control by Function (Sheet 1 of 13)

Signal Name	Ball No.	Type	IPD/IPU	Description
Boot Configuration Pins				
LENDIAN †	H25	IOZ	UP	Endian configuration pin (Pin shared with GPIO[0])
BOOTMODE00 †	J28	IOZ	Down	See Section 2.5 "Boot Modes Supported and PLL Settings" on page 24 for more details (Pins shared with GPIO[1:13])
BOOTMODE01†	J29	IOZ	Down	
BOOTMODE02 †	J26	IOZ	Down	
BOOTMODE03 †	J25	IOZ	Down	
BOOTMODE04 †	J27	IOZ	Down	
BOOTMODE05 †	J24	IOZ	Down	
BOOTMODE06 †	K27	IOZ	Down	
BOOTMODE07 †	K28	IOZ	Down	
BOOTMODE08 †	K26	IOZ	Down	
BOOTMODE09 †	K29	IOZ	Down	
BOOTMODE10 †	L28	IOZ	Down	
BOOTMODE11 †	L29	IOZ	Down	
BOOTMODE12 †	K25	IOZ	Down	

Copyright 2014 Texas Instruments Incorporated

Table 2-26 Terminal Functions — Signals and Control by Function (Sheet 2 of 13)

Signal Name	Ball No.	Type	IPD/IPU	Description
PCIESSMODE0 †	K24	IOZ	Down	PCIe Mode selection pins (Pins shared with GPIO[14:15])
PCIESSMODE1 †	L27	IOZ	Down	
PCIESSEN †	L24	I	Down	PCIe module enable (Pin shared with TIMI0)
Clock / Reset				
CORECLKP	AG3	I		Core Clock Input to main PLL.
CORECLKN	AG4	I		
SRIOSGMIICLKP	AG6	I		RapidIO/SGMII Reference Clock to drive the RapidIO and SGMII SerDes
SRIOSGMIICLKN	AJ6	I		
DDRCLKP	G29	I		DDR Reference Clock Input to DDR PLL (
DDRCLKN	H29	I		
PCIECLKP	AG5	I		PCIe Clock Input to drive PCIe SerDes
PCIECLKN	AH5	I		
MCMCLKP	W2	I		HyperLink Reference Clock to drive the HyperLink SerDes
MCMCLKN	Y2	I		
PASSCLKP	AJ5	I		Network Coprocessor (PASS PLL) Reference Clock
PASSCLKN	AJ4	I		
AVDDA1	H22	P		SYS_CLK PLL Power Supply Pin
AVDDA2	AC6	P		DDR_CLK PLL Power Supply Pin
AVDDA3	AD5	P		PASS_CLK PLL Power Supply Pin
SYSCLKOUT	AE3	OZ	Down	System Clock Output to be used as a general purpose output clock for debug purposes
PACLKSEL	AE4	I	Down	PA clock select to choose between core clock and PASSCLK pins
HOUT	AD20	OZ	UP	Interrupt output pulse created by IPCGRH
$\overline{\text{NMI}}$	M25	I	UP	Non-maskable Interrupt
$\overline{\text{LRESET}}$	N26	I	UP	Warm Reset
$\overline{\text{LRESETNMIEN}}$	M27	I	UP	Enable for core selects
CORESEL0	AF2	I	Down	Select for the target core for LRESET and NMI. For more details see Table 7-47"NMI and Local Reset Timing Requirements" on page 190
CORESEL1	AD4	I	Down	
CORESEL2	AE6	I	Down	
CORESEL3	AE5	I	Down	
$\overline{\text{RESETFULL}}$	N25	I	UP	Full Reset
$\overline{\text{RESET}}$	M29	I	UP	Warm Reset of non isolated portion on the IC
$\overline{\text{POR}}$	AC20	I		Power-on Reset
$\overline{\text{RESETSTAT}}$	N27	O	UP	Reset Status Output
BOOTCOMPLETE	AE2	OZ	Down	Boot progress indication output
PTV15	G22	A		PTV Compensation NMOS Reference Input. A precision resistor placed between the PTV15 pin and ground is used to closely tune the output impedance of the DDR interface drivers to 50 Ω. Presently the recommended value for this 1% resistor is 45.3 Ω.

Table 2-26 Terminal Functions — Signals and Control by Function (Sheet 3 of 13)

Signal Name	Ball No.	Type	IPD/IPU	Description
DDR				
DDRDQM0	E29	OZ		DDR EMIF Data Masks
DDRDQM1	C27	OZ		
DDRDQM2	A25	OZ		
DDRDQM3	A22	OZ		
DDRDQM4	A10	OZ		
DDRDQM5	A8	OZ		
DDRDQM6	B5	OZ		
DDRDQM7	B2	OZ		
DDRDQM8	A20	OZ		
DDRDQS0P	C28	IOZ		DDR EMIF Data Strobe
DDRDQS0N	C29	IOZ		
DDRDQS1P	A27	IOZ		
DDRDQS1N	B27	IOZ		
DDRDQS2P	A24	IOZ		
DDRDQS2N	B24	IOZ		
DDRDQS3P	A21	IOZ		
DDRDQS3N	B21	IOZ		
DDRDQS4P	A9	IOZ		
DDRDQS4N	B9	IOZ		
DDRDQS5P	B6	IOZ		
DDRDQS5N	A6	IOZ		
DDRDQS6P	B3	IOZ		
DDRDQS6N	A3	IOZ		
DDRDQS7P	D1	IOZ		
DDRDQS7N	C1	IOZ		
DDRDQS8P	A19	IOZ		
DDRDQS8N	B19	IOZ		
DDRCB00	E19	IOZ		DDR EMIF Check Bits
DDRCB01	C20	IOZ		
DDRCB02	D19	IOZ		
DDRCB03	B20	IOZ		
DDRCB04	C19	IOZ		
DDRCB05	C18	IOZ		
DDRCB06	B18	IOZ		
DDRCB07	A18	IOZ		

Copyright 2014 Texas Instruments Incorporated

Table 2-26 Terminal Functions — Signals and Control by Function (Sheet 4 of 13)

Signal Name	Ball No.	Type	IPD/IPU	Description
DDRD00	E28	IOZ		DDR EMIF Data Bus
DDRD01	D29	IOZ		
DDRD02	E27	IOZ		
DDRD03	D28	IOZ		
DDRD04	D27	IOZ		
DDRD05	B28	IOZ		
DDRD06	E26	IOZ		
DDRD07	F25	IOZ		
DDRD08	F24	IOZ		
DDRD09	E24	IOZ		
DDRD10	E25	IOZ		
DDRD11	D25	IOZ		
DDRD12	D26	IOZ		
DDRD13	C26	IOZ		
DDRD14	B26	IOZ		
DDRD15	A26	IOZ		
DDRD16	F23	IOZ		
DDRD17	F22	IOZ		
DDRD18	D24	IOZ		
DDRD19	E23	IOZ		
DDRD20	A23	IOZ		
DDRD21	B23	IOZ		
DDRD22	C24	IOZ		DDR EMIF Data Bus
DDRD23	E22	IOZ		
DDRD24	D21	IOZ		
DDRD25	F20	IOZ		
DDRD26	E21	IOZ		
DDRD27	F21	IOZ		
DDRD28	D22	IOZ		
DDRD29	C21	IOZ		
DDRD30	B22	IOZ		
DDRD31	C22	IOZ		
DDRD32	E10	IOZ		
DDRD33	D10	IOZ		
DDRD34	B10	IOZ		
DDRD35	D9	IOZ		
DDRD36	E9	IOZ		
DDRD37	C9	IOZ		
DDRD38	B8	IOZ		
DDRD39	E8	IOZ		
DDRD40	A7	IOZ		
DDRD41	D7	IOZ		

Copyright 2014 Texas Instruments Incorporated

Table 2-26 Terminal Functions — Signals and Control by Function (Sheet 5 of 13)

Signal Name	Ball No.	Type	IPD/IPU	Description
DDRD42	E7	IOZ		DDR EMIF Data Bus
DDRD43	C7	IOZ		
DDRD44	B7	IOZ		
DDRD45	E6	IOZ		
DDRD46	D6	IOZ		
DDRD47	C6	IOZ		
DDRD48	C5	IOZ		
DDRD49	A5	IOZ		
DDRD50	B4	IOZ		
DDRD51	A4	IOZ		
DDRD52	D4	IOZ		
DDRD53	E4	IOZ		
DDRD54	C4	IOZ		
DDRD55	C3	IOZ		
DDRD56	F4	IOZ		
DDRD57	D2	IOZ		
DDRD58	E2	IOZ		
DDRD59	C2	IOZ		
DDRD60	F2	IOZ		
DDRD61	F3	IOZ		
DDRD62	E1	IOZ		
DDRD63	F1	IOZ		
$\overline{\text{DDRCE0}}$	C11	OZ		DDR EMIF Chip Enables
$\overline{\text{DDRCE1}}$	C12	OZ		
DDRBA0	A13	OZ		DDR EMIF Bank Address
DDRBA1	B13	OZ		
DDRBA2	C13	OZ		
DDRA00	A14	OZ		DDR EMIF Address Bus
DDRA01	B14	OZ		
DDRA02	F14	OZ		
DDRA03	F13	OZ		
DDRA04	A15	OZ		
DDRA05	C15	OZ		
DDRA06	B15	OZ		
DDRA07	D15	OZ		
DDRA08	F15	OZ		
DDRA09	E15	OZ		
DDRA10	E16	OZ		
DDRA11	D16	OZ		
DDRA12	E17	OZ		
DDRA13	C16	OZ		
DDRA14	D17	OZ		
DDRA15	C17	OZ		

Copyright 2014 Texas Instruments Incorporated

Table 2-26 Terminal Functions — Signals and Control by Function (Sheet 6 of 13)

Signal Name	Ball No.	Type	IPD/IPU	Description
DDRCAS	D12	OZ		DDR EMIF Column Address Strobe
DDRRAS	C10	OZ		DDR EMIF Row Address Strobe
DDRWE	E12	OZ		DDR EMIF Write Enable
DDRCKE0	D11	OZ		DDR EMIF Clock Enable
DDRCKE1	E18	OZ		DDR EMIF Clock Enable
DDRCLKOUTP0	A12	OZ		DDR EMIF Output Clocks to drive SDRAMs (one clock pair per SDRAM)
DDRCLKOUTN0	B12	OZ		
DDRCLKOUTP1	A16	OZ		
DDRCLKOUTN1	B16	OZ		
DDRODT0	D13	OZ		DDR EMIF On Die Termination Outputs used to set termination on the SDRAMs
DDRODT1	E13	OZ		DDR EMIF On Die Termination Outputs used to set termination on the SDRAMs
DDRRESET	E11	OZ		DDR Reset signal
DDRSLRATE0	G27	I	Down	DDR Slew rate control
DDRSLRATE1	H27	I	Down	
VREFSSTL	E14	P		Reference Voltage Input for SSTL15 buffers used by DDR EMIF (VDDS15 ÷ 2)
EMIF16				
EMIFRW	P26	OZ	UP	EMIF16 Control Signals
EMIFCE0	P25	OZ	UP	
EMIFCE1	R27	OZ	UP	
EMIFCE2	R28	OZ	UP	
EMIFCE3	R25	OZ	UP	
EMIFOE	R26	OZ	UP	
EMIFWE	P24	OZ	UP	
EMIFBE0	R24	OZ	UP	
EMIFBE1	R23	OZ	UP	
EMIFWAIT0	T29	I	Down	
EMIFWAIT1	T28	I	Down	

Copyright 2014 Texas Instruments Incorporated

Table 2-26 Terminal Functions — Signals and Control by Function (Sheet 7 of 13)

Signal Name	Ball No.	Type	IPD/IPU	Description
EMIFA00	T27	OZ	Down	EMIF16 Address
EMIFA01	T24	OZ	Down	
EMIFA02	U29	OZ	Down	
EMIFA03	T25	OZ	Down	
EMIFA04	U27	OZ	Down	
EMIFA05	U28	OZ	Down	
EMIFA06	U25	OZ	Down	
EMIFA07	U24	OZ	Down	
EMIFA08	V28	OZ	Down	
EMIFA09	V29	OZ	Down	
EMIFA10	V27	OZ	Down	
EMIFA11	V26	OZ	Down	
EMIFA12	V25	OZ	Down	
EMIFA13	V24	OZ	Down	
EMIFA14	W28	OZ	Down	
EMIFA15	W27	OZ	Down	
EMIFA16	W29	OZ	Down	
EMIFA17	W26	OZ	Down	
EMIFA18	W25	OZ	Down	
EMIFA19	W24	OZ	Down	
EMIFA20	W23	OZ	Down	
EMIFA21	Y29	OZ	Down	
EMIFA22	Y28	OZ	Down	
EMIFA23	U23	OZ	Down	
EMIFD00	Y27	IOZ	Down	EMIF16 Data
EMIFD01	AB29	IOZ	Down	
EMIFD02	AA29	IOZ	Down	
EMIFD03	Y26	IOZ	Down	
EMIFD04	AA27	IOZ	Down	
EMIFD05	AB27	IOZ	Down	
EMIFD06	AA26	IOZ	Down	
EMIFD07	AA25	IOZ	Down	
EMIFD08	Y25	IOZ	Down	
EMIFD09	AB25	IOZ	Down	
EMIFD10	AA24	IOZ	Down	
EMIFD11	Y24	IOZ	Down	
EMIFD12	AB23	IOZ	Down	
EMIFD13	AB24	IOZ	Down	
EMIFD14	AB26	IOZ	Down	
EMIFD15	AC25	IOZ	Down	

Copyright 2014 Texas Instruments Incorporated

Table 2-26 Terminal Functions — Signals and Control by Function (Sheet 8 of 13)

Signal Name	Ball No.	Type	IPD/IPU	Description
EMU				
EMU00	AC29	IOZ	UP	Emulation and Trace Port
EMU01	AC28	IOZ	UP	
EMU02	AC27	IOZ	UP	
EMU03	AC26	IOZ	UP	
EMU04	AD29	IOZ	UP	
EMU05	AD28	IOZ	UP	
EMU06	AD27	IOZ	UP	
EMU07	AE29	IOZ	UP	
EMU08	AE28	IOZ	UP	
EMU09	AF29	IOZ	UP	
EMU10	AE27	IOZ	UP	
EMU11	AF28	IOZ	UP	
EMU12	AG29	IOZ	UP	
EMU13	AD26	IOZ	UP	
EMU14	AG28	IOZ	UP	
EMU15	AG27	IOZ	UP	
EMU16	AJ27	IOZ	UP	
EMU17	AF27	IOZ	UP	
EMU18	AH27	IOZ	UP	
General Purpose Input/Output (GPIO)				
GPIO00	H25	IOZ	UP	General Purpose Input/Output These GPIO pins have secondary functions assigned to them as mentioned in the "Boot Configuration Pins" on page 44.
GPIO01	J28	IOZ	Down	
GPIO02	J29	IOZ	Down	
GPIO03	J26	IOZ	Down	
GPIO04	J25	IOZ	Down	
GPIO05	J27	IOZ	Down	
GPIO06	J24	IOZ	Down	
GPIO07	K27	IOZ	Down	
GPIO08	K28	IOZ	Down	
GPIO09	K26	IOZ	Down	
GPIO10	K29	IOZ	Down	
GPIO11	L28	IOZ	Down	
GPIO12	L29	IOZ	Down	
GPIO13	K25	IOZ	Down	
GPIO14	K24	IOZ	Down	
GPIO15	L27	IOZ	Down	

Copyright 2014 Texas Instruments Incorporated

Table 2-26 Terminal Functions — Signals and Control by Function (Sheet 9 of 13)

Signal Name	Ball No.	Type	IPD/IPU	Description
HyperLink				
MCMRXN0	U2	I		Serial HyperLink Receive Data
MCMRXP0	T2	I		
MCMRXN1	T1	I		
MCMRXP1	R1	I		
MCMRXN2	M1	I		
MCMRXP2	N1	I		
MCMRXN3	P2	I		
MCMRXP3	N2	I		
MCMTXN0	M5	O		Serial HyperLink Transmit Data
MCMTXP0	N5	O		
MCMTXN1	T4	O		
MCMTXP1	U4	O		
MCMTXN2	R5	O		
MCMTXP2	T5	O		
MCMTXN3	N4	O		
MCMTXP3	P4	O		
MCMRXFLCLK	W3	O	Down	Serial HyperLink Sideband Signals
MCMRXFLDAT	W4	O	Down	
MCMTXFLCLK	AA1	I	Down	
MCMTXFLDAT	AA3	I	Down	
MCMRXPMCLK	Y3	I	Down	
MCMRXPMDAT	Y4	I	Down	
MCMTXPMCLK	AA2	O	Down	
MCMTXPMDAT	AA4	O	Down	
MCMREFCLKOUTP	Y1	O		HyperLink Reference clock output for daisy chain connection
MCMREFCLKOUTN	W1	O		
I^2C				
SCL	AD3	IOZ		I^2C Clock
SDA	AC4	IOZ		I^2C Data
JTAG				
TCK	N29	I	UP	JTAG Clock Input
TDI	P27	I	UP	JTAG Data Input
TDO	R29	OZ	UP	JTAG Data Output
TMS	P29	I	UP	JTAG Test Mode Input
$\overline{TRST}$	P28	I	Down	JTAG Reset
MDIO				
MDIO	G26	IOZ	UP	MDIO Data
MDCLK	H26	O	Down	MDIO Clock

Copyright 2014 Texas Instruments Incorporated

Table 2-26 Terminal Functions — Signals and Control by Function (Sheet 10 of 13)

Signal Name	Ball No.	Type	IPD/IPU	Description
PCIe				
PCIERXN0	AH7	I		PCIexpress Receive Data (2 links)
PCIERXP0	AH8	I		
PCIERXN1	AJ9	I		
PCIERXP1	AJ8	I		
PCIETXN0	AF8	O		PCIexpress Transmit Data (2 links)
PCIETXP0	AF7	O		
PCIETXN1	AG9	O		
PCIETXP1	AG8	O		
Serial RapidIO				
RIORXN0	AJ11	I		Serial RapidIO Receive Data (2 links)
RIORXP0	AJ12	I		
RIORXN1	AH10	I		
RIORXP1	AH11	I		
RIORXN2	AH14	I		Serial RapidIO Receive Data (2 links)
RIORXP2	AH13	I		
RIORXN3	AJ15	I		
RIORXP3	AJ14	I		
RIOTXN0	AF10	O		Serial RapidIO Transmit Data (2 links)
RIOTXP0	AF11	O		
RIOTXN1	AG11	O		
RIOTXP1	AG12	O		
RIOTXN2	AG15	O		Serial RapidIO Transmit Data (2 links)
RIOTXP2	AG14	O		
RIOTXN3	AF14	O		
RIOTXP3	AF13	O		
SGMII				
SGMII0RXN	AJ18	I		Ethernet MAC SGMII Receive Data
SGMII0RXP	AJ17	I		
SGMII0TXN	AG18	O		Ethernet MAC SGMII Transmit Data
SGMII0TXP	AG17	O		
SGMII1RXN	AH17	I		Ethernet MAC SGMII Receive Data
SGMII1RXP	AH16	I		
SGMII1TXN	AF17	O		Ethernet MAC SGMII Transmit Data
SGMII1TXP	AF16	O		
SmartReflex				
VCNTL0	L23	OZ		Voltage Control Outputs to variable core power supply. These are open-drain output buffers.
VCNTL1	K23	OZ		
VCNTL2	J23	OZ		
VCNTL3	H23	OZ		

Copyright 2014 Texas Instruments Incorporated

Table 2-26 Terminal Functions — Signals and Control by Function (Sheet 11 of 13)

Signal Name	Ball No.	Type	IPD/IPU	Description
SPI				
SPISCS0	AG1	OZ	UP	SPI Interface Enable 0
SPISCS1	AG2	OZ	UP	SPI Interface Enable 1
SPICLK	AE1	OZ	Down	SPI Clock
SPIDIN	AD2	I	Down	SPI Data In
SPIDOUT	AB1	OZ	Down	SPI Data Out
Timer				
TIMI0	L24	I	Down	Timer Inputs
TIMI1	L26	I	Down	
TIMO0	L25	OZ	Down	Timer Outputs
TIMO1	M26	OZ	Down	
TSIP				
CLKA0	AF25	I	Down	TSIP0 external clock A
CLKB0	AG25	I	Down	TSIP0 external clock B
FSA0	AJ26	I	Down	TSIP0 frame sync A
FSB0	AG26	I	Down	TSIP0 frame sync B
TR00	AH26	I	Down	TSIP0 receive data
TR01	AJ25	I	Down	
TR02	AD23	I	Down	
TR03	AD24	I	Down	
TR04	AC23	I	Down	
TR05	AH25	I	Down	
TR06	AC24	I	Down	
TR07	AE25	I	Down	
TX00	AE24	OZ	Down	TSIP0 transmit data
TX01	AD25	OZ	Down	
TX02	AJ24	OZ	Down	
TX03	AG24	OZ	Down	
TX04	AH24	OZ	Down	
TX05	AF24	OZ	Down	
TX06	AE23	OZ	Down	
TX07	AF23	OZ	Down	
CLKA1	AJ23	I	Down	TSIP1 external clock A
CLKB1	AH23	I	Down	TSIP1 external clock B
FSA1	AG23	I	Down	TSIP1 frame sync A
FSB1	AJ22	I	Down	TSIP1 frame sync B

Copyright 2014 Texas Instruments Incorporated

Table 2-26 Terminal Functions — Signals and Control by Function (Sheet 12 of 13)

Signal Name	Ball No.	Type	IPD/IPU	Description
TR10	AE22	I	Down	TSIP1 receive data
TR11	AD21	I	Down	
TR12	AC21	I	Down	
TR13	AJ21	I	Down	
TR14	AH22	I	Down	
TR15	AJ20	I	Down	
TR16	AH21	I	Down	
TR17	AG21	I	Down	
TX10	AF21	OZ	Down	TSIP1 transmit data
TX11	AD22	OZ	Down	
TX12	AC22	OZ	Down	
TX13	AE21	OZ	Down	
TX14	AG20	OZ	Down	
TX15	AE20	OZ	Down	
TX16	AH20	OZ	Down	
TX17	AF20	OZ	Down	
UART				
UARTRXD	AD1	I	Down	UART Serial Data In
UARTTXD	AC1	OZ	Down	UART Serial Data Out
UARTCTS	AB3	I	Down	UART Clear To Send
UARTRTS	AB2	OZ	Down	UART Request To Send
Reserved				
RSV01	AH28	IOZ	Down	Reserved - Pullup to DVDD18
RSV02	N24	OZ	Down	Reserved - leave unconnected
RSV03	N23	OZ	Down	Reserved - leave unconnected
RSV04	AH2	O		Reserved - leave unconnected
RSV05	AJ3	O		Reserved - leave unconnected
RSV06	H28	O		Reserved - leave unconnected
RSV07	G28	O		Reserved - leave unconnected
RSV08	AH19	A		Reserved - Connect to GND
RSV09	AF19	A		Reserved - leave unconnected
RSV10	K22	A		Reserved - leave unconnected
RSV11	J22	A		Reserved - leave unconnected
RSV12	Y5	A		Reserved - leave unconnected
RSV13	W5	A		Reserved - leave unconnected
RSV14	W6	A		Reserved - leave unconnected
RSV15	AE12	A		Reserved - leave unconnected
RSV16	AC9	A		Reserved - leave unconnected
RSV17	AD19	A		Reserved - leave unconnected
RSV20	AF3	OZ	Down	Reserved - leave unconnected
RSV21	G25	OZ	Down	Reserved - leave unconnected
RSV22	AF1	OZ	Down	Reserved - leave unconnected
RSV24	AH4	O		Reserved - leave unconnected

Copyright 2014 Texas Instruments Incorporated

Table 2-26 Terminal Functions — Signals and Control by Function (Sheet 13 of 13)

Signal Name	Ball No.	Type	IPD/IPU	Description
RSV25	AH3	O		Reserved - leave unconnected
RSV26	M23	IOZ		Reserved - leave unconnected
RSV27	M24	IOZ		Reserved - leave unconnected
RSV0A	AA21	A		Reserved - leave unconnected
RSV0B	AA20	A		Reserved - leave unconnected
End of Table 2-26				

Copyright 2014 Texas Instruments Incorporated

Table 2-27 Terminal Functions — Power and Ground

Supply	Ball No.	Volts	Description
AVDDA1	H22	1.8	PLL Supply - CORE_PLL
AVDDA2	AC6	1.8	PLL Supply - DDR3_PLL
AVDDA3	AD5	1.8	PLL Supply - PASS_PLL
CVDD	H7, H9, H11, H13, H15, H17, H19, H21, J10, J12, J16, J18, J20, K11, K17, K19, K21, L10, L12, L16, L18, M11, M13, M15, M17, M19, N8, N10, N12, N14, N16, N18, P9, P11, P13, P15, P17, P19, P21, R8, R10, R18, R20, R22, T9, T11, T13, T15, T17, T19, T21, U8, U10, U18, U20, U22, V9, V11, V17, V19, V21, W8, W10, W18, W20, W22, Y9, Y11, Y13, Y15, Y17, Y19, Y21, AA8, AA10, AA12, AA14, AA16, AA18, AA22	0.9 to 1.1	SmartReflex core supply voltage
CVDD1	J8, J14, K7, K9, K13, K15, L8, L14, L20, L22, M9, M21, N20, N22, R12, R14, R16, U12, U14, U16, V13, V15, W12, W14, W16	1.0	Fixed core supply voltage for memory array
DVDD15	A2, A11, A17, A28, B1, B29, C14, C25, D5, D8, D20, D23, E3, F5, F7, F9, F11, F17, F19, F26, F28, G2, G4, G8, G10, G12, G14, G16, G18, G20, G23	1.5	DDR IO supply
DVDD18	H24, N28, P23, T23, U26, V23, Y7, Y23, AA6, AB5, AB7, AB19, AB21, AB28, AC3, AF5, AF26, AG22, AH1, AH29, AJ2, AJ28	1.8	IO supply
VDDR1	V5	1.5	HyperLink SerDes regulator supply
VDDR2	AE10	1.5	PCIe SerDes regulator supply
VDDR3	AE16	1.5	SGMII SerDes regulator supply
VDDR4	AE14	1.5	SRIO SerDes regulator supply
VDDT1	M7, N6, P7, R6, T7, U6, V7	1.0	HyperLink SerDes termination supply
VDDT2	AB9, AB11, AB13, AB15, AB17, AC8, AC10, AC12, AC14, AC16, AC18, AD7, AD9, AD11, AD13, AD15, AD17, AE18	1.0	SGMII/SRIO/PCIe SerDes termination supply
VREFSSTL	E14	0.75	DDR3 reference voltage
VSS	A1, A29, B11, B17, B25, C8, C23, D3, D14, D18, E5, E20, F6, F8, F10, F12, F16, F18, F27, F29, G1, G3, G5, G6, G7, G9, G11, G13, G15, G17, G19, G21, G24, H1, H2, H3, H4, H5, H6, H8, H10, H12, H14, H16, H18, H20, J1, J2, J3, J4, J5, J6, J7, J9, J11, J13, J15, J17, J19, J21, K1, K2, K3, K4, K5, K6, K8, K10, K12, K14, K16, K18, K20, L1, L2, L3, L4, L5, L6, L7, L9, L11, L13, L15, L17, L19, L21, M2, M3, M4, M6, M8, M10, M12, M14, M16, M18, M20, M22, M28, N3, N7, N9, N11, N13, N15, N17, N19, N21, P1, P3, P5, P6, P8, P10, P12, P14, P16, P18, P20, P22, R2, R3, R4, R7, R9, R11, R13, R15, R17, R19, R21, T3, T6, T8, T10, T12, T14, T16, T18, T20, T22, T26, U1, U3, U5, U7, U9, U11, U13, U15, U17, U19, U21, V1, V2, V3, V4, V6, V8, V10, V12, V14, V16, V18, V20, V22, W7, W9, W11, W13, W15, W17, W19, W21, Y6, Y8, Y10, Y12, Y14, Y16, Y18, Y20, Y22, AA5, AA7, AA9, AA11, AA13, AA15, AA17, AA19, AA23, AA28, AB4, AB6, AB8, AB10, AB12, AB14, AB16, AB18, AB20, AB22, AC2, AC5, AC7, AC11, AC13, AC15, AC17, AC19, AD6, AD8, AD10, AD12, AD14, AD16, AD18, AE7, AE8, AE9, AE11, AE13, AE15, AE17, AE19, AE26, AF4, AF6, AF9, AF12, AF15, AF18, AF22, AG7, AG10, AG13, AG16, AG19, AH6, AH9, AH12, AH15, AH18, AJ1, AJ7, AJ10, AJ13, AJ16, AJ19, AJ29	GND	Ground
End of Table 2-27			

Table 2-28 Terminal Functions — By Signal Name (Sheet 1 of 13)

Signal Name	Ball Number
AVDDA1	H22
AVDDA2	AC6
AVDDA3	AD5
BOOTCOMPLETE	AE2
BOOTMODE00 †	J28
BOOTMODE01†	J29
BOOTMODE02 †	J26
BOOTMODE03 †	J25
BOOTMODE04 †	J27
BOOTMODE05 †	J24
BOOTMODE06 †	K27
BOOTMODE07 †	K28
BOOTMODE08 †	K26
BOOTMODE09 †	K29
BOOTMODE10 †	L28
BOOTMODE11 †	L29
BOOTMODE12 †	K25
CLKA0	AF25
CLKA1	AJ23
CLKB0	AG25
CLKB1	AH23
CORECLKN	AG4
CORECLKP	AG3
CORESEL0	AF2
CORESEL1	AD4
CORESEL2	AE6
CORESEL3	AE5
CVDD	H7, H9, H11, H13, H15, H17, H19, H21, J10, J12, J16, J18, J20, K11, K17, K19, K21, L10, L12, L16, L18, M11, M13, M15, M17, M19, N8, N10, N12, N14,
CVDD	N16, N18, P9, P11, P13, P15, P17, P19, P21, R8, R10, R18, R20, R22, T9, T11, T13, T15, T17, T19, T21, U8, U10, U18, U20, U22, V9, V11, V17, V19, V21, W8,

Table 2-28 Terminal Functions — By Signal Name (Sheet 2 of 13)

Signal Name	Ball Number
CVDD	W10, W18, W20, W22, Y9, Y11, Y13, Y15, Y17, Y19, Y21, AA8, AA10, AA12, AA14, AA16, AA18, AA22
CVDD1	J8, J14, K7, K9, K13, K15, L8, L14, L20, L22, M9, M21, N20, N22, R12, R14, R16, U12, U14, U16, V13, V15, W12, W14, W16
DDRA00	A14
DDRA01	B14
DDRA02	F14
DDRA03	F13
DDRA04	A15
DDRA05	C15
DDRA06	B15
DDRA07	D15
DDRA08	F15
DDRA09	E15
DDRA10	E16
DDRA11	D16
DDRA12	E17
DDRA13	C16
DDRA14	D17
DDRA15	C17
DDRBA0	A13
DDRBA1	B13
DDRBA2	C13
$\overline{\text{DDRCAS}}$	D12
DDRCB00	E19
DDRCB01	C20
DDRCB02	D19
DDRCB03	B20
DDRCB04	C19
DDRCB05	C18
DDRCB06	B18
DDRCB07	A18
$\overline{\text{DDRCE0}}$	C11
$\overline{\text{DDRCE1}}$	C12
DDRCKE0	D11
DDRCKE1	E18
DDRCLKN	H29

Table 2-28 Terminal Functions — By Signal Name (Sheet 3 of 13)

Signal Name	Ball Number
DDRCLKOUTN0	B12
DDRCLKOUTN1	B16
DDRCLKOUTP0	A12
DDRCLKOUTP1	A16
DDRCLKP	G29
DDRD00	E28
DDRD01	D29
DDRD02	E27
DDRD03	D28
DDRD04	D27
DDRD05	B28
DDRD06	E26
DDRD07	F25
DDRD08	F24
DDRD09	E24
DDRD10	E25
DDRD11	D25
DDRD12	D26
DDRD13	C26
DDRD14	B26
DDRD15	A26
DDRD16	F23
DDRD17	F22
DDRD18	D24
DDRD19	E23
DDRD20	A23
DDRD21	B23
DDRD22	C24
DDRD23	E22
DDRD24	D21
DDRD25	F20
DDRD26	E21
DDRD27	F21
DDRD28	D22
DDRD29	C21
DDRD30	B22
DDRD31	C22
DDRD32	E10
DDRD33	D10
DDRD34	B10
DDRD35	D9
DDRD36	E9

Copyright 2014 Texas Instruments Incorporated

Table 2-28 Terminal Functions — By Signal Name (Sheet 4 of 13)

Signal Name	Ball Number
DDRD37	C9
DDRD38	B8
DDRD39	E8
DDRD40	A7
DDRD41	D7
DDRD42	E7
DDRD43	C7
DDRD44	B7
DDRD45	E6
DDRD46	D6
DDRD47	C6
DDRD48	C5
DDRD49	A5
DDRD50	B4
DDRD51	A4
DDRD52	D4
DDRD53	E4
DDRD54	C4
DDRD55	C3
DDRD56	F4
DDRD57	D2
DDRD58	E2
DDRD59	C2
DDRD60	F2
DDRD61	F3
DDRD62	E1
DDRD63	F1
DDRDQM0	E29
DDRDQM1	C27
DDRDQM2	A25
DDRDQM3	A22
DDRDQM4	A10
DDRDQM5	A8
DDRDQM6	B5
DDRDQM7	B2
DDRDQM8	A20
DDRDQS0N	C29
DDRDQS0P	C28
DDRDQS1N	B27
DDRDQS1P	A27
DDRDQS2N	B24
DDRDQS2P	A24

Table 2-28 Terminal Functions — By Signal Name (Sheet 5 of 13)

Signal Name	Ball Number
DDRDQS3N	B21
DDRDQS3P	A21
DDRDQS4N	B9
DDRDQS4P	A9
DDRDQS5N	A6
DDRDQS5P	B6
DDRDQS6N	A3
DDRDQS6P	B3
DDRDQS7N	C1
DDRDQS7P	D1
DDRDQS8N	B19
DDRDQS8P	A19
DDRODT0	D13
DDRODT1	E13
$\overline{\text{DDRRAS}}$	C10
$\overline{\text{DDRRESET}}$	E11
DDRSLRATE0	G27
DDRSLRATE1	H27
$\overline{\text{DDRWE}}$	E12
DVDD15	A2, A11, A17, A28, B1, B29, C14, C25, D5, D8, D20, D23, E3, F5, F7, F9, F11, F17, F19, F26, F28, G2, G4, G8, G10, G12, G14, G16, G18, G20, G23
DVDD18	H24, N28, P23, T23, U26, V23, Y7, Y23, AA6, AB5, AB7, AB19, AB21, AB28, AC3, AF5, AF26, AG22, AH1, AH29, AJ2, AJ28
EMIFA00	T27
EMIFA01	T24
EMIFA02	U29
EMIFA03	T25
EMIFA04	U27
EMIFA05	U28
EMIFA06	U25
EMIFA07	U24
EMIFA08	V28
EMIFA09	V29
EMIFA10	V27
EMIFA11	V26
EMIFA12	V25

Table 2-28 Terminal Functions — By Signal Name (Sheet 6 of 13)

Signal Name	Ball Number
EMIFA13	V24
EMIFA14	W28
EMIFA15	W27
EMIFA16	W29
EMIFA17	W26
EMIFA18	W25
EMIFA19	W24
EMIFA20	W23
EMIFA21	Y29
EMIFA22	Y28
EMIFA23	U23
$\overline{\text{EMIFBE0}}$	R24
$\overline{\text{EMIFBE1}}$	R23
$\overline{\text{EMIFCE0}}$	P25
$\overline{\text{EMIFCE1}}$	R27
$\overline{\text{EMIFCE2}}$	R28
$\overline{\text{EMIFCE3}}$	R25
EMIFD00	Y27
EMIFD01	AB29
EMIFD02	AA29
EMIFD03	Y26
EMIFD04	AA27
EMIFD05	AB27
EMIFD06	AA26
EMIFD07	AA25
EMIFD08	Y25
EMIFD09	AB25
EMIFD10	AA24
EMIFD11	Y24
EMIFD12	AB23
EMIFD13	AB24
EMIFD14	AB26
EMIFD15	AC25
$\overline{\text{EMIFOE}}$	R26
EMIF$\overline{\text{RW}}$	P26
EMIFWAIT0	T29
EMIFWAIT1	T28
$\overline{\text{EMIFWE}}$	P24
EMU00	AC29
EMU01	AC28
EMU02	AC27
EMU03	AC26

Copyright 2014 Texas Instruments Incorporated

Table 2-28 Terminal Functions — By Signal Name (Sheet 7 of 13)

Signal Name	Ball Number
EMU04	AD29
EMU05	AD28
EMU06	AD27
EMU07	AE29
EMU08	AE28
EMU09	AF29
EMU10	AE27
EMU11	AF28
EMU12	AG29
EMU13	AD26
EMU14	AG28
EMU15	AG27
EMU16	AJ27
EMU17	AF27
EMU18	AH27
FSA0	AJ26
FSA1	AG23
FSB0	AG26
FSB1	AJ22
GPIO00	H25
GPIO01	J28
GPIO02	J29
GPIO03	J26
GPIO04	J25
GPIO05	J27
GPIO06	J24
GPIO07	K27
GPIO08	K28
GPIO09	K26
GPIO10	K29
GPIO11	L28
GPIO12	L29
GPIO13	K25
GPIO14	K24
GPIO15	L27
HOUT	AD20
LENDIAN †	H25
$\overline{\text{LRESETNMIEN}}$	M27
$\overline{\text{LRESET}}$	N26
MCMCLKN	Y2
MCMCLKP	W2
MCMREFCLKOUTN	W1

Table 2-28 Terminal Functions — By Signal Name (Sheet 8 of 13)

Signal Name	Ball Number
MCMREFCLKOUTP	Y1
MCMRXFLCLK	W3
MCMRXFLDAT	W4
MCMRXN0	U2
MCMRXN1	T1
MCMRXN2	M1
MCMRXN3	P2
MCMRXP0	T2
MCMRXP1	R1
MCMRXP2	N1
MCMRXP3	N2
MCMRXPMCLK	Y3
MCMRXPMDAT	Y4
MCMTXFLCLK	AA1
MCMTXFLDAT	AA3
MCMTXN0	M5
MCMTXN1	T4
MCMTXN2	R5
MCMTXN3	N4
MCMTXP0	N5
MCMTXP1	U4
MCMTXP2	T5
MCMTXP3	P4
MCMTXPMCLK	AA2
MCMTXPMDAT	AA4
MDCLK	H26
MDIO	G26
$\overline{\text{NMI}}$	M25
PACLKSEL	AE4
PASSCLKN	AJ4
PASSCLKP	AJ5
PCIECLKN	AH5
PCIECLKP	AG5
PCIERXN0	AH7
PCIERXN1	AJ9
PCIERXP0	AH8
PCIERXP1	AJ8
PCIESSMODE0 †	K24
PCIESSMODE1 †	L27
PCIESSEN †	L24
PCIETXN0	AF8
PCIETXN1	AG9

Table 2-28 Terminal Functions — By Signal Name (Sheet 9 of 13)

Signal Name	Ball Number
PCIETXP0	AF7
PCIETXP1	AG8
$\overline{\text{POR}}$	AC20
PTV15	G22
$\overline{\text{RESETFULL}}$	N25
$\overline{\text{RESETSTAT}}$	N27
$\overline{\text{RESET}}$	M29
RIORXN0	AJ11
RIORXN1	AH10
RIORXN2	AH14
RIORXN3	AJ15
RIORXP0	AJ12
RIORXP1	AH11
RIORXP2	AH13
RIORXP3	AJ14
RIOTXN0	AF10
RIOTXN1	AG11
RIOTXN2	AG15
RIOTXN3	AF14
RIOTXP0	AF11
RIOTXP1	AG12
RIOTXP2	AG14
RIOTXP3	AF13
RSV01	AH28
RSV02	N24
RSV03	N23
RSV04	AH2
RSV05	AJ3
RSV06	H28
RSV07	G28
RSV08	AH19
RSV09	AF19
RSV0A	AA21
RSV0B	AA20
RSV10	K22
RSV11	J22
RSV12	Y5
RSV13	W5
RSV14	W6
RSV15	AE12
RSV16	AC9
RSV17	AD19

Copyright 2014 Texas Instruments Incorporated

Table 2-28 Terminal Functions — By Signal Name (Sheet 10 of 13)

Signal Name	Ball Number
RSV20	AF3
RSV21	G25
RSV22	AF1
RSV24	AH4
RSV25	AH3
SCL	AD3
SDA	AC4
SGMII0RXN	AJ18
SGMII0RXP	AJ17
SGMII0TXN	AG18
SGMII0TXP	AG17
SGMII1RXN	AH17
SGMII1RXP	AH16
SGMII1TXN	AF17
SGMII1TXP	AF16
SPICLK	AE1
SPIDIN	AD2
SPIDOUT	AB1
SPISCS0	AG1
SPISCS1	AG2
SRIOSGMIICLKN	AJ6
SRIOSGMIICLKP	AG6
SYSCLKOUT	AE3
TCK	N29
TDI	P27
TDO	R29
TIMI0	L24
TIMI1	L26
TIMO0	L25
TIMO1	M26
TMS	P29
TR00	AH26
TR01	AJ25
TR02	AD23
TR03	AD24
TR04	AC23
TR05	AH25
TR06	AC24
TR07	AE25
TR10	AE22
TR11	AD21
TR12	AC21

Table 2-28 Terminal Functions — By Signal Name (Sheet 11 of 13)

Signal Name	Ball Number
TR13	AJ21
TR14	AH22
TR15	AJ20
TR16	AH21
TR17	AG21
$\overline{\text{TRST}}$	P28
TX00	AE24
TX01	AD25
TX02	AJ24
TX03	AG24
TX04	AH24
TX05	AF24
TX06	AE23
TX07	AF23
TX10	AF21
TX11	AD22
TX12	AC22
TX13	AE21
TX14	AG20
TX15	AE20
TX16	AH20
TX17	AF20
UARTCTS	AB3
UARTRTS	AB2
UARTRXD	AD1
UARTTXD	AC1
VCNTL0	L23
VCNTL1	K23
VCNTL2	J23
VCNTL3	H23
VDDR1	V5
VDDR2	AE10
VDDR3	AE16
VDDR4	AE14
VDDT1	M7, N6, P7, R6, T7, U6, V7
VDDT2	AB9, AB11, AB13, AB15, AB17, AC8, AC10, AC12, AC14, AC16, AC18, AD7, AD9, AD11, AD13, AD15, AD17, AE18
VREFSSTL	E14

Table 2-28 Terminal Functions — By Signal Name (Sheet 12 of 13)

Signal Name	Ball Number
VSS	A1, A29, B11, B17, B25, C8, C23, D3, D14, D18, E5, E20, F6, F8, F10, F12, F16, F18, F27, F29, G1, G3, G5, G6, G7, G9, G11, G13, G15, G17, G19, G21, G24,
VSS	H1, H2, H3, H4, H5, H6, H8, H10, H12, H14, H16, H18, H20, J1, J2, J3, J4, J5, J6, J7, J9, J11, J13, J15, J17, J19, J21, K1, K2, K3, K4, K5, K6, K8, K10, K12, K14, K16,
VSS	K18, K20, L1, L2, L3, L4, L5, L6, L7, L9, L11, L13, L15, L17, L19, L21, M2, M3, M4, M6, M8, M10, M12, M14, M16, M18, M20, M22, M28, N3, N7, N9,
VSS	N11, N13, N15, N17, N19, N21, P1, P3, P5, P6, P8, P10, P12, P14, P16, P18, P20, P22, R2, R3, R4, R7, R9, R11, R13, R15, R17, R19, R21, T3, T6, T8, T10, T12,
VSS	T14, T16, T18, T20, T22, T26, U1, U3, U5, U7, U9, U11, U13, U15, U17, U19, U21, V1, V2, V3, V4, V6, V8, V10, V12, V14, V16, V18, V20, V22, W7, W9, W11,
VSS	W13, W15, W17, W19, W21, Y6, Y8, Y10, Y12, Y14, Y16, Y18, Y20, Y22, AA5, AA7, AA9, AA11, AA13, AA15, AA17, AA19, AA23, AA28, AB4, AB6, AB8,
VSS	AB10, AB12, AB14, AB16, AB18, AB20, AB22, AC2, AC5, AC7, AC11, AC13, AC15, AC17, AC19, AD6, AD8, AD10, AD12, AD14, AD16, AD18, AE7, AE8,

Copyright 2014 Texas Instruments Incorporated

Table 2-28 Terminal Functions — By Signal Name (Sheet 13 of 13)

Signal Name	Ball Number
VSS	AE9, AE11, AE13, AE15, AE17, AE19, AE26, AF4, AF6, AF9, AF12, AF15, AF18, AF22AG7, AG10, AG13, AG16, AG19, AH6, AH9, AH12, AH15, AH18,
VSS	AJ1, AJ7, AJ10, AJ13, AJ16, AJ19, AJ29
End of Table 2-28	

Table 2-29 Terminal Functions — By Ball Number (Sheet 1 of 21)

Ball Number	Signal Name
A1	VSS
A2	DVDD15
A3	DDRDQS6N
A4	DDRD51
A5	DDRD49
A6	DDRDQS5N
A7	DDRD40
A8	DDRDQM5
A9	DDRDQS4P
A10	DDRDQM4
A11	DVDD15
A12	DDRCLKOUTP0
A13	DDRBA0
A14	DDRA00
A15	DDRA04
A16	DDRCLKOUTP1
A17	DVDD15
A18	DDRCB07
A19	DDRDQS8P
A20	DDRDQM8
A21	DDRDQS3P
A22	DDRDQM3
A23	DDRD20
A24	DDRDQS2P
A25	DDRDQM2
A26	DDRD15
A27	DDRDQS1P
A28	DVDD15
A29	VSS
B1	DVDD15
B2	DDRDQM7
B3	DDRDQS6P
B4	DDRD50
B5	DDRDQM6
B6	DDRDQS5P
B7	DDRD44
B8	DDRD38
B9	DDRDQS4N
B10	DDRD34
B11	VSS
B12	DDRCLKOUTN0
B13	DDRBA1

Table 2-29 Terminal Functions — By Ball Number (Sheet 2 of 21)

Ball Number	Signal Name
B14	DDRA01
B15	DDRA06
B16	DDRCLKOUTN1
B17	VSS
B18	DDRCB06
B19	DDRDQS8N
B20	DDRCB03
B21	DDRDQS3N
B22	DDRD30
B23	DDRD21
B24	DDRDQS2N
B25	VSS
B26	DDRD14
B27	DDRDQS1N
B28	DDRD05
B29	DVDD15
C1	DDRDQS7N
C2	DDRD59
C3	DDRD55
C4	DDRD54
C5	DDRD48
C6	DDRD47
C7	DDRD43
C8	VSS
C9	DDRD37
C10	$\overline{\text{DDRRAS}}$
C11	$\overline{\text{DDRCE0}}$
C12	$\overline{\text{DDRCE1}}$
C13	DDRBA2
C14	DVDD15
C15	DDRA05
C16	DDRA13
C17	DDRA15
C18	DDRCB05
C19	DDRCB04
C20	DDRCB01
C21	DDRD29
C22	DDRD31
C23	VSS
C24	DDRD22
C25	DVDD15
C26	DDRD13

Table 2-29 Terminal Functions — By Ball Number (Sheet 3 of 21)

Ball Number	Signal Name
C27	DDRDQM1
C28	DDRDQS0P
C29	DDRDQS0N
D1	DDRDQS7P
D2	DDRD57
D3	VSS
D4	DDRD52
D5	DVDD15
D6	DDRD46
D7	DDRD41
D8	DVDD15
D9	DDRD35
D10	DDRD33
D11	DDRCKE0
D12	$\overline{\text{DDRCAS}}$
D13	DDRODT0
D14	VSS
D15	DDRA07
D16	DDRA11
D17	DDRA14
D18	VSS
D19	DDRCB02
D20	DVDD15
D21	DDRD24
D22	DDRD28
D23	DVDD15
D24	DDRD18
D25	DDRD11
D26	DDRD12
D27	DDRD04
D28	DDRD03
D29	DDRD01
E1	DDRD62
E2	DDRD58
E3	DVDD15
E4	DDRD53
E5	VSS
E6	DDRD45
E7	DDRD42
E8	DDRD39
E9	DDRD36
E10	DDRD32

Copyright 2014 Texas Instruments Incorporated

Table 2-29 Terminal Functions — By Ball Number (Sheet 4 of 21)

Ball Number	Signal Name
E11	DDRRESET
E12	DDRWE
E13	DDRODT1
E14	VREFSSTL
E15	DDRA09
E16	DDRA10
E17	DDRA12
E18	DDRCKE1
E19	DDRCB00
E20	VSS
E21	DDRD26
E22	DDRD23
E23	DDRD19
E24	DDRD09
E25	DDRD10
E26	DDRD06
E27	DDRD02
E28	DDRD00
E29	DDRDQM0
F1	DDRD63
F2	DDRD60
F3	DDRD61
F4	DDRD56
F5	DVDD15
F6	VSS
F7	DVDD15
F8	VSS
F9	DVDD15
F10	VSS
F11	DVDD15
F12	VSS
F13	DDRA03
F14	DDRA02
F15	DDRA08
F16	VSS
F17	DVDD15
F18	VSS
F19	DVDD15
F20	DDRD25
F21	DDRD27
F22	DDRD17
F23	DDRD16

Table 2-29 Terminal Functions — By Ball Number (Sheet 5 of 21)

Ball Number	Signal Name
F24	DDRD08
F25	DDRD07
F26	DVDD15
F27	VSS
F28	DVDD15
F29	VSS
G1	VSS
G2	DVDD15
G3	VSS
G4	DVDD15
G5	VSS
G6	VSS
G7	VSS
G8	DVDD15
G9	VSS
G10	DVDD15
G11	VSS
G12	DVDD15
G13	VSS
G14	DVDD15
G15	VSS
G16	DVDD15
G17	VSS
G18	DVDD15
G19	VSS
G20	DVDD15
G21	VSS
G22	PTV15
G23	DVDD15
G24	VSS
G25	RSV21
G26	MDIO
G27	DDRSLRATE0
G28	RSV07
G29	DDRCLKP
H1	VSS
H2	VSS
H3	VSS
H4	VSS
H5	VSS
H6	VSS
H7	CVDD

Table 2-29 Terminal Functions — By Ball Number (Sheet 6 of 21)

Ball Number	Signal Name
H8	VSS
H9	CVDD
H10	VSS
H11	CVDD
H12	VSS
H13	CVDD
H14	VSS
H15	CVDD
H16	VSS
H17	CVDD
H18	VSS
H19	CVDD
H20	VSS
H21	CVDD
H22	AVDDA1
H23	VCNTL3
H24	DVDD18
H25	GPIO00
H25	LENDIAN †
H26	MDCLK
H27	DDRSLRATE1
H28	RSV06
H29	DDRCLKN
J1	VSS
J2	VSS
J3	VSS
J4	VSS
J5	VSS
J6	VSS
J7	VSS
J8	CVDD1
J9	VSS
J10	CVDD
J11	VSS
J12	CVDD
J13	VSS
J14	CVDD1
J15	VSS
J16	CVDD
J17	VSS
J18	CVDD
J19	VSS

Copyright 2014 Texas Instruments Incorporated

Table 2-29 Terminal Functions — By Ball Number (Sheet 7 of 21)

Ball Number	Signal Name
J20	CVDD
J21	VSS
J22	RSV11
J23	VCNTL2
J24	GPIO06
J24	BOOTMODE05 †
J25	GPIO04
J25	BOOTMODE03 †
J26	GPIO03
J26	BOOTMODE02 †
J27	GPIO05
J27	BOOTMODE04 †
J28	GPIO01
J28	BOOTMODE00 †
J29	GPIO02
J29	BOOTMODE01†
K1	VSS
K2	VSS
K3	VSS
K4	VSS
K5	VSS
K6	VSS
K7	CVDD1
K8	VSS
K9	CVDD1
K10	VSS
K11	CVDD
K12	VSS
K13	CVDD1
K14	VSS
K15	CVDD1
K16	VSS
K17	CVDD
K18	VSS
K19	CVDD
K20	VSS
K21	CVDD
K22	RSV10
K23	VCNTL1
K24	GPIO14
K24	PCIESSMODE0 †
K25	GPIO13

Table 2-29 Terminal Functions — By Ball Number (Sheet 8 of 21)

Ball Number	Signal Name
K25	BOOTMODE12 †
K26	GPIO09
K26	BOOTMODE08 †
K27	GPIO07
K27	BOOTMODE06 †
K28	GPIO08
K28	BOOTMODE07 †
K29	GPIO10
K29	BOOTMODE09 †
L1	VSS
L2	VSS
L3	VSS
L4	VSS
L5	VSS
L6	VSS
L7	VSS
L8	CVDD1
L9	VSS
L10	CVDD
L11	VSS
L12	CVDD
L13	VSS
L14	CVDD1
L15	VSS
L16	CVDD
L17	VSS
L18	CVDD
L19	VSS
L20	CVDD1
L21	VSS
L22	CVDD1
L23	VCNTL0
L24	TIMI0
L24	PCIESSEN †
L25	TIMO0
L26	TIMI1
L27	GPIO15
L27	PCIESSMODE1 †
L28	GPIO11
L28	BOOTMODE10 †
L29	GPIO12
L29	BOOTMODE11 †

Table 2-29 Terminal Functions — By Ball Number (Sheet 9 of 21)

Ball Number	Signal Name
M1	MCMRXN2
M2	VSS
M3	VSS
M4	VSS
M5	MCMTXN0
M6	VSS
M7	VDDT1
M8	VSS
M9	CVDD1
M10	VSS
M11	CVDD
M12	VSS
M13	CVDD
M14	VSS
M15	CVDD
M16	VSS
M17	CVDD
M18	VSS
M19	CVDD
M20	VSS
M21	CVDD1
M22	VSS
M25	$\overline{\text{NMI}}$
M26	TIMO1
M27	$\overline{\text{LRESETNMIEN}}$
M28	VSS
M29	$\overline{\text{RESET}}$
N1	MCMRXP2
N2	MCMRXP3
N3	VSS
N4	MCMTXN3
N5	MCMTXP0
N6	VDDT1
N7	VSS
N8	CVDD
N9	VSS
N10	CVDD
N11	VSS
N12	CVDD
N13	VSS
N14	CVDD
N15	VSS

Copyright 2014 Texas Instruments Incorporated

Table 2-29 Terminal Functions — By Ball Number (Sheet 10 of 21)

Ball Number	Signal Name
N16	CVDD
N17	VSS
N18	CVDD
N19	VSS
N20	CVDD1
N21	VSS
N22	CVDD1
N23	RSV03
N24	RSV02
N25	RESETFULL
N26	LRESET
N27	RESETSTAT
N28	DVDD18
N29	TCK
P1	VSS
P2	MCMRXN3
P3	VSS
P4	MCMTXP3
P5	VSS
P6	VSS
P7	VDDT1
P8	VSS
P9	CVDD
P10	VSS
P11	CVDD
P12	VSS
P13	CVDD
P14	VSS
P15	CVDD
P16	VSS
P17	CVDD
P18	VSS
P19	CVDD
P20	VSS
P21	CVDD
P22	VSS
P23	DVDD18
P24	EMIFWE
P25	EMIFCE0
P26	EMIFRW
P27	TDI
P28	TRST

Table 2-29 Terminal Functions — By Ball Number (Sheet 11 of 21)

Ball Number	Signal Name
P29	TMS
R1	MCMRXP1
R2	VSS
R3	VSS
R4	VSS
R5	MCMTXN2
R6	VDDT1
R7	VSS
R8	CVDD
R9	VSS
R10	CVDD
R11	VSS
R12	CVDD1
R13	VSS
R14	CVDD1
R15	VSS
R16	CVDD1
R17	VSS
R18	CVDD
R19	VSS
R20	CVDD
R21	VSS
R22	CVDD
R23	EMIFBE1
R24	EMIFBE0
R25	EMIFCE3
R26	EMIFOE
R27	EMIFCE1
R28	EMIFCE2
R29	TDO
T1	MCMRXN1
T2	MCMRXP0
T3	VSS
T4	MCMTXN1
T5	MCMTXP2
T6	VSS
T7	VDDT1
T8	VSS
T9	CVDD
T10	VSS
T11	CVDD
T12	VSS

Table 2-29 Terminal Functions — By Ball Number (Sheet 12 of 21)

Ball Number	Signal Name
T13	CVDD
T14	VSS
T15	CVDD
T16	VSS
T17	CVDD
T18	VSS
T19	CVDD
T20	VSS
T21	CVDD
T22	VSS
T23	DVDD18
T24	EMIFA01
T25	EMIFA03
T26	VSS
T27	EMIFA00
T28	EMIFWAIT1
T29	EMIFWAIT0
U1	VSS
U2	MCMRXN0
U3	VSS
U4	MCMTXP1
U5	VSS
U6	VDDT1
U7	VSS
U8	CVDD
U9	VSS
U10	CVDD
U11	VSS
U12	CVDD1
U13	VSS
U14	CVDD1
U15	VSS
U16	CVDD1
U17	VSS
U18	CVDD
U19	VSS
U20	CVDD
U21	VSS
U22	CVDD
U23	EMIFA23
U24	EMIFA07
U25	EMIFA06

Copyright 2014 Texas Instruments Incorporated

Table 2-29 Terminal Functions — By Ball Number (Sheet 13 of 21)

Ball Number	Signal Name
U26	DVDD18
U27	EMIFA04
U28	EMIFA05
U29	EMIFA02
V1	VSS
V2	VSS
V3	VSS
V4	VSS
V5	VDDR1
V6	VSS
V7	VDDT1
V8	VSS
V9	CVDD
V10	VSS
V11	CVDD
V12	VSS
V13	CVDD1
V14	VSS
V15	CVDD1
V16	VSS
V17	CVDD
V18	VSS
V19	CVDD
V20	VSS
V21	CVDD
V22	VSS
V23	DVDD18
V24	EMIFA13
V25	EMIFA12
V26	EMIFA11
V27	EMIFA10
V28	EMIFA08
V29	EMIFA09
W1	MCMREFCLKOUTN
W2	MCMCLKP
W3	MCMRXFLCLK
W4	MCMRXFLDAT
W5	RSV13
W6	RSV14
W7	VSS
W8	CVDD
W9	VSS

Table 2-29 Terminal Functions — By Ball Number (Sheet 14 of 21)

Ball Number	Signal Name
W10	CVDD
W11	VSS
W12	CVDD1
W13	VSS
W14	CVDD1
W15	VSS
W16	CVDD1
W17	VSS
W18	CVDD
W19	VSS
W20	CVDD
W21	VSS
W22	CVDD
W23	EMIFA20
W24	EMIFA19
W25	EMIFA18
W26	EMIFA17
W27	EMIFA15
W28	EMIFA14
W29	EMIFA16
Y1	MCMREFCLKOUTP
Y2	MCMCLKN
Y3	MCMRXPMCLK
Y4	MCMRXPMDAT
Y5	RSV12
Y6	VSS
Y7	DVDD18
Y8	VSS
Y9	CVDD
Y10	VSS
Y11	CVDD
Y12	VSS
Y13	CVDD
Y14	VSS
Y15	CVDD
Y16	VSS
Y17	CVDD
Y18	VSS
Y19	CVDD
Y20	VSS
Y21	CVDD
Y22	VSS

Table 2-29 Terminal Functions — By Ball Number (Sheet 15 of 21)

Ball Number	Signal Name
Y23	DVDD18
Y24	EMIFD11
Y25	EMIFD08
Y26	EMIFD03
Y27	EMIFD00
Y28	EMIFA22
Y29	EMIFA21
AA1	MCMTXFLCLK
AA2	MCMTXPMCLK
AA3	MCMTXFLDAT
AA4	MCMTXPMDAT
AA5	VSS
AA6	DVDD18
AA7	VSS
AA8	CVDD
AA9	VSS
AA10	CVDD
AA11	VSS
AA12	CVDD
AA13	VSS
AA14	CVDD
AA15	VSS
AA16	CVDD
AA17	VSS
AA18	CVDD
AA19	VSS
AA20	RSV0B
AA21	RSV0A
AA22	CVDD
AA23	VSS
AA24	EMIFD10
AA25	EMIFD07
AA26	EMIFD06
AA27	EMIFD04
AA28	VSS
AA29	EMIFD02
AB1	SPIDOUT
AB2	UARTRTS
AB3	UARTCTS
AB4	VSS
AB5	DVDD18
AB6	VSS

Copyright 2014 Texas Instruments Incorporated

Table 2-29 Terminal Functions — By Ball Number (Sheet 16 of 21)

Ball Number	Signal Name
AB7	DVDD18
AB8	VSS
AB9	VDDT2
AB10	VSS
AB11	VDDT2
AB12	VSS
AB13	VDDT2
AB14	VSS
AB15	VDDT2
AB16	VSS
AB17	VDDT2
AB18	VSS
AB19	DVDD18
AB20	VSS
AB21	DVDD18
AB22	VSS
AB23	EMIFD12
AB24	EMIFD13
AB25	EMIFD09
AB26	EMIFD14
AB27	EMIFD05
AB28	DVDD18
AB29	EMIFD01
AC1	UARTTXD
AC2	VSS
AC3	DVDD18
AC4	SDA
AC5	VSS
AC6	AVDDA2
AC7	VSS
AC8	VDDT2
AC9	RSV16
AC10	VDDT2
AC11	VSS
AC12	VDDT2
AC13	VSS
AC14	VDDT2
AC15	VSS
AC16	VDDT2
AC17	VSS
AC18	VDDT2
AC19	VSS

Table 2-29 Terminal Functions — By Ball Number (Sheet 17 of 21)

Ball Number	Signal Name
AC20	$\overline{\text{POR}}$
AC21	TR12
AC22	TX12
AC23	TR04
AC24	TR06
AC25	EMIFD15
AC26	EMU03
AC27	EMU02
AC28	EMU01
AC29	EMU00
AD1	UARTRXD
AD2	SPIDIN
AD3	SCL
AD4	CORESEL1
AD5	AVDDA3
AD6	VSS
AD7	VDDT2
AD8	VSS
AD9	VDDT2
AD10	VSS
AD11	VDDT2
AD12	VSS
AD13	VDDT2
AD14	VSS
AD15	VDDT2
AD16	VSS
AD17	VDDT2
AD18	VSS
AD19	RSV17
AD20	HOUT
AD21	TR11
AD22	TX11
AD23	TR02
AD24	TR03
AD25	TX01
AD26	EMU13
AD27	EMU06
AD28	EMU05
AD29	EMU04
AE1	SPICLK
AE2	BOOTCOMPLETE
AE3	SYSCLKOUT

Table 2-29 Terminal Functions — By Ball Number (Sheet 18 of 21)

Ball Number	Signal Name
AE4	PACLKSEL
AE5	CORESEL3
AE6	CORESEL2
AE7	VSS
AE8	VSS
AE9	VSS
AE10	VDDR2
AE11	VSS
AE12	RSV15
AE13	VSS
AE14	VDDR4
AE15	VSS
AE16	VDDR3
AE17	VSS
AE18	VDDT2
AE19	VSS
AE20	TX15
AE21	TX13
AE22	TR10
AE23	TX06
AE24	TX00
AE25	TR07
AE26	VSS
AE27	EMU10
AE28	EMU08
AE29	EMU07
AF1	RSV22
AF2	CORESEL0
AF3	RSV20
AF4	VSS
AF5	DVDD18
AF6	VSS
AF7	PCIETXP0
AF8	PCIETXN0
AF9	VSS
AF10	RIOTXN0
AF11	RIOTXP0
AF12	VSS
AF13	RIOTXP3
AF14	RIOTXN3
AF15	VSS
AF16	SGMII1TXP

Copyright 2014 Texas Instruments Incorporated

Table 2-29 Terminal Functions — By Ball Number (Sheet 19 of 21)

Ball Number	Signal Name
AF17	SGMII1TXN
AF18	VSS
AF19	RSV09
AF20	TX17
AF21	TX10
AF22	VSS
AF23	TX07
AF24	TX05
AF25	CLKA0
AF26	DVDD18
AF27	EMU17
AF28	EMU11
AF29	EMU09
AG1	SPISCS0
AG2	SPISCS1
AG3	CORECLKP
AG4	CORECLKN
AG5	PCIECLKP
AG6	SRIOSGMIICLKP
AG7	VSS
AG8	PCIETXP1
AG9	PCIETXN1
AG10	VSS
AG11	RIOTXN1
AG12	RIOTXP1
AG13	VSS
AG14	RIOTXP2
AG15	RIOTXN2
AG16	VSS
AG17	SGMII0TXP
AG18	SGMII0TXN
AG19	VSS
AG20	TX14
AG21	TR17
AG22	DVDD18
AG23	FSA1
AG24	TX03
AG25	CLKB0
AG26	FSB0
AG27	EMU15
AG28	EMU14
AG29	EMU12

Table 2-29 Terminal Functions — By Ball Number (Sheet 20 of 21)

Ball Number	Signal Name
AH1	DVDD18
AH2	RSV04
AH3	RSV25
AH4	RSV24
AH5	PCIECLKN
AH6	VSS
AH7	PCIERXN0
AH8	PCIERXP0
AH9	VSS
AH10	RIORXN1
AH11	RIORXP1
AH12	VSS
AH13	RIORXP2
AH14	RIORXN2
AH15	VSS
AH16	SGMII1RXP
AH17	SGMII1RXN
AH18	VSS
AH19	RSV08
AH20	TX16
AH21	TR16
AH22	TR14
AH23	CLKB1
AH24	TX04
AH25	TR05
AH26	TR00
AH27	EMU18
AH28	RSV01
AH29	DVDD18
AJ1	VSS
AJ2	DVDD18
AJ3	RSV05
AJ4	PASSCLKN
AJ5	PASSCLKP
AJ6	SRIOSGMIICLKN
AJ7	VSS
AJ8	PCIERXP1
AJ9	PCIERXN1
AJ10	VSS
AJ11	RIORXN0
AJ12	RIORXP0
AJ13	VSS

Table 2-29 Terminal Functions — By Ball Number (Sheet 21 of 21)

Ball Number	Signal Name
AJ14	RIORXP3
AJ15	RIORXN3
AJ16	VSS
AJ17	SGMII0RXP
AJ18	SGMII0RXN
AJ19	VSS
AJ20	TR15
AJ21	TR13
AJ22	FSB1
AJ23	CLKA1
AJ24	TX02
AJ25	TR01
AJ26	FSA0
AJ27	EMU16
AJ28	DVDD18
AJ29	VSS
End of Table 2-29	

Copyright 2014 Texas Instruments Incorporated

2.9 Development and Support

2.9.1 Development Support

In case the customer would like to develop their own features and software on the C6678 device, TI offers an extensive line of development tools for the TMS320C6000™ DSP platform, including tools to evaluate the performance of the processors, generate code, develop algorithm implementations, and fully integrate and debug software and hardware modules. The tool's support documentation is electronically available within the Code Composer Studio™ Integrated Development Environment (IDE).

The following products support development of C6000™ DSP-based applications:

- **Software Development Tools:**
  - Code Composer Studio™ Integrated Development Environment (IDE), including Editor C/C++/Assembly Code Generation, and Debug plus additional development tools.
  - Scalable, Real-Time Foundation Software (DSP/BIOS™), which provides the basic run-time target software needed to support any DSP application.
- **Hardware Development Tools:**
  - Extended Development System (XDS™) Emulator (supports C6000™ DSP multiprocessor system debug)
  - EVM (Evaluation Module)

2.9.2 Device Support

2.9.2.1 Device and Development-Support Tool Nomenclature

To designate the stages in the product development cycle, TI assigns prefixes to the part numbers of all DSP devices and support tools. Each DSP commercial family member has one of three prefixes: TMX, TMP, or TMS (e.g., TMX320CMH). Texas Instruments recommends two of three possible prefix designators for its support tools: TMDX and TMDS. These prefixes represent evolutionary stages of product development from engineering prototypes (TMX/TMDX) through fully qualified production devices/tools (TMS/TMDS).

Device development evolutionary flow:

- **TMX:** Experimental device that is not necessarily representative of the final device's electrical specifications
- **TMP:** Final silicon die that conforms to the device's electrical specifications but has not completed quality and reliability verification
- **TMS:** Fully qualified production device

Support tool development evolutionary flow:

- **TMDX:** Development-support product that has not yet completed Texas Instruments internal qualification testing.
- **TMDS:** Fully qualified development-support product

TMX and TMP devices and TMDX development-support tools are shipped with the following disclaimer:

"Developmental product is intended for internal evaluation purposes."

TMS devices and TMDS development-support tools have been characterized fully, and the quality and reliability of the device have been demonstrated fully. TI's standard warranty applies.

Predictions show that prototype devices (TMX or TMP) have a greater failure rate than the standard production devices. Texas Instruments recommends that these devices not be used in any production system because their expected end-use failure rate still is undefined. Only qualified production devices are to be used.

Copyright 2014 Texas Instruments Incorporated

TI device nomenclature also includes a suffix with the device family name. This suffix indicates the package type (for example, CYP), the temperature range (for example, blank is the default case temperature range), and the device speed range, in Megahertz (for example, blank is 1000 MHz [1 GHz]).

For device part numbers and further ordering information for TMS320C6678 in the CYP package type, see the TI website www.ti.com or contact your TI sales representative.

Figure 2-17 provides a legend for reading the complete device name for any C66x KeyStone device.

Figure 2-17 C66x DSP Device Nomenclature (including the TMS320C6678)

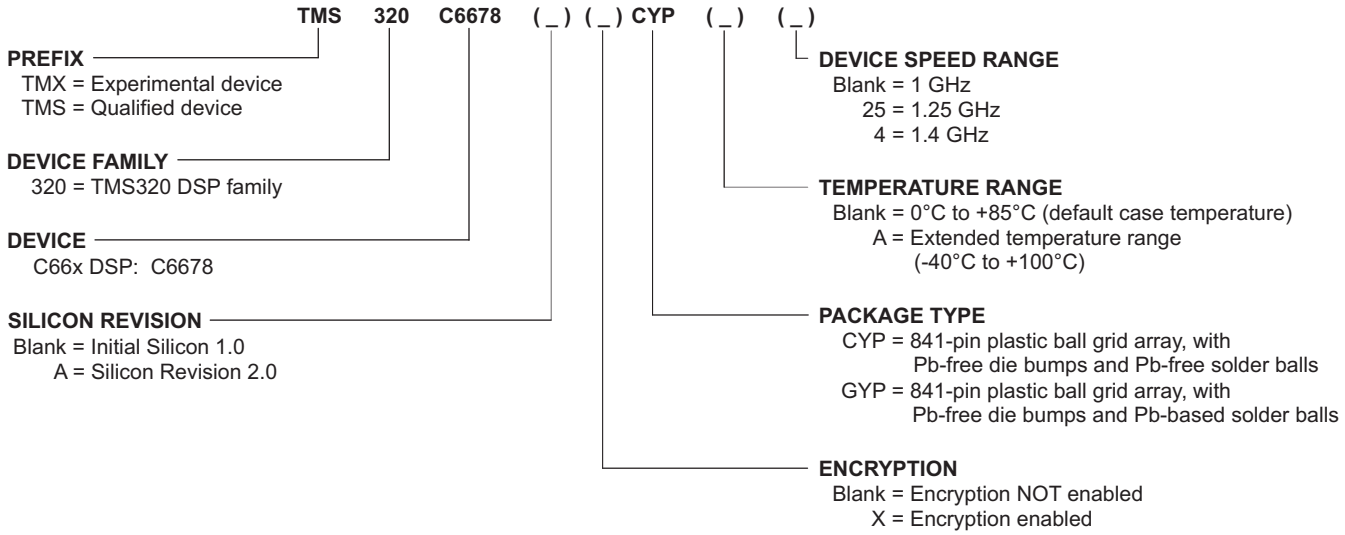

Copyright 2014 Texas Instruments Incorporated

2.10 Related Documentation from Texas Instruments

These documents describe the TMS320C6678 Multicore Fixed and Floating-Point Digital Signal Processor. Copies of these documents are available on the Internet at www.ti.com

C66x DSP CorePac User Guide	SPRUGW0
C66x DSP CPU and Instruction Set Reference Guide	SPRUGH7
C66x DSP Cache User Guide	SPRUGY8
Chip Interrupt Controller (CIC) for KeyStone Devices User Guide	SPRUGW4
DDR3 Design Requirements for KeyStone Devices	SPRABI1
DDR3 Memory Controller for KeyStone Devices User Guide	SPRUGV8
Debug and Trace for KeyStone I Devices User Guide	SPRUGZ2
DSP Bootloader for KeyStone Devices User Guide	SPRUGY5
Emulation and Trace Headers Technical Reference	SPRU655
Enhanced Direct Memory Access 3 (EDMA3) Controller for KeyStone Devices User Guide	SPRUGS5
External Memory Interface (EMIF16) for KeyStone Devices User Guide	SPRUGZ3
General Purpose Input/Output (GPIO) for KeyStone Devices User Guide	SPRUGV1
Gigabit Ethernet (GbE) Switch Subsystem for KeyStone Devices User Guide	SPRUGV9
Hardware Design Guide for KeyStone I Devices	SPRABI2
HyperLink for KeyStone Devices User Guide	SPRUGW8
Inter -IC Control Bus (I^2C) for KeyStone Devices User Guide	SPRUGV3
Memory Protection Unit (MPU) for KeyStone Devices User Guide	SPRUGW5
Multicore Navigator for KeyStone Devices User Guide	SPRUGR9
Multicore Shared Memory Controller (MSMC) for KeyStone Devices User Guide	SPRUGW7
Network Coprocessor (NETCP) for KeyStone Devices User Guide	SPRUGZ6
Packet Accelerator (PA) for KeyStone Devices User Guide	SPRUGS4
Peripheral Component Interconnect Express (PCIe) for KeyStone Devices User Guide	SPRUGS6
Phase Locked Loop (PLL) for KeyStone Devices User Guide	SPRUGV2
Power Consumption Summary for KeyStone C66x Devices	SPRABL5
Power Sleep Controller (PSC) for KeyStone Devices User Guide	SPRUGV4
Security Accelerator (SA) for KeyStone Devices User Guide	SPRUGY6
Semaphore2 Hardware Module for KeyStone Devices User Guide	SPRUGS3
Serial Peripheral Interface (SPI) for KeyStone Devices User Guide	SPRUGP2
Serial RapidIO (SRIO) for KeyStone Devices User Guide	SPRUGW1
Telecom Serial Interface Port (TSIP) for the C66x DSP User Guide	SPRUGY4
Timer64P for KeyStone Devices User Guide	SPRUGV5
Universal Asynchronous Receiver/Transmitter (UART) for KeyStone Devices User Guide	SPRUGP1
Using Advanced Event Triggering to Debug Real-Time Problems in High Speed Embedded Microprocessor Systems	SPRA387
Using Advanced Event Triggering to Find and Fix Intermittent Real-Time Bugs	SPRA753
Using IBIS Models for Timing Analysis	SPRA839

Copyright 2014 Texas Instruments Incorporated

3 Device Configuration

On the TMS320C6678 device, certain device configurations like boot mode and endianess, are selected at device power-on reset. The status of the peripherals (enabled/disabled) is determined after device power-on reset.

3.1 Device Configuration at Device Reset

Table 3-1 describes the device configuration pins. The logic level is latched at power-on reset to determine the device configuration. The logic level on the device configuration pins can be set by using external pullup/pulldown resistors or by using some control device (e.g., FPGA/CPLD) to intelligently drive these pins. When using a control device, care should be taken to ensure there is no contention on the lines when the device is out of reset. The device configuration pins are sampled during power-on reset and are driven after the reset is removed. To avoid contention, the control device must stop driving the device configuration pins of the DSP. And when driving by a control device, the control device must be fully powered and out of reset itself and driving the pins before the DSP can be taken out of reset.

Also, note that most of the device configuration pins are shared with other function pins (LENDIAN/GPIO[0], BOOTMODE[12:0]/GPIO[13:1], PCIESSMODE[1:0]/GPIO[15:14] and PCIESSEN/TIMI0), some time must be given following the rising edge of reset in order to drive these device configuration input pins before they assume an output state (those GPIO pins should not become outputs during boot). Another caution that must be noted is that systems using TIMI0 (pin shared with PCIESSEN) as a clock input must assure that the clock itself is disabled from the input until after reset is released and a control device is no longer driving that input.

Note—If a configuration pin must be routed out from the device and it is not driven (Hi-Z state), the internal pullup/pulldown (IPU/IPD) resistor should not be relied upon. TI recommends the use of an external pullup/pulldown resistor. For more detailed information on pullup/pulldown resistors and situations in which external pullup/pulldown resistors are required, see Section 3.4 "Pullup/Pulldown Resistors" on page 97.

Table 3-1 TMS320C6678 Device Configuration Pins

Configuration Pin	Pin No.	IPD/IPU (1)	Functional Description
LENDIAN(1) (2)	H25	IPU	Device endian mode (LENDIAN). 0 = Device operates in big endian mode 1 = Device operates in little endian mode
BOOTMODE[12:0] (1) (2)	J28, J29, J26, J25, J27, J24, K27, K28, K26, K29, L28, L29, K25	IPD	Method of boot. Some pins may not be used by bootloader and can be used as general purpose config pins. See the *Bootloader for the C66x DSP User Guide* in "Related Documentation from Texas Instruments" on page 72 for how to determine the device enumeration ID value.
PCIESSMODE[1:0] (1) (2)	L27, K24	IPD	PCIe Subsystem mode selection. 00 = PCIe in end point mode 01 = PCIe legacy end point (support for legacy INTx) 10 = PCIe in root complex mode 11 = Reserved
PCIESSEN (1) (2)	L24	IPD	PCIe subsystem enable/disable. 0 = PCIE Subsystem is disabled 1 = PCIE Subsystem is enabled
PACLKSEL(1)	AE4	IPD	Network Coprocessor (PASS PLL) input clock select. 0 = CORECLK is used as the input to PASS PLL 1 = PASSCLK is used as the input to PASS PLL
End of Table 3-1			

1 Internal 100-µA pulldown or pullup is provided for this terminal. In most systems, a 1-kΩ resistor can be used to oppose the IPD/IPU. For more detailed information on pulldown/pullup resistors and situations in which external pulldown/pullup resistors are required, see Section 3.4 "Pullup/Pulldown Resistors" on page 97.

2 These signal names are the secondary functions of these pins.

Copyright 2014 Texas Instruments Incorporated

3.2 Peripheral Selection After Device Reset

Several of the peripherals on the TMS320C6678 are controlled by the Power Sleep Controller (PSC). By default, the PCIe, SRIO, and HyperLink are held in reset and clock-gated. The memories in these modules are also in a low-leakage sleep mode. Software is required to turn these memories on. The software enables the modules (turns on clocks and de-asserts reset) before these modules can be used.

If one of the above modules is used in the selected ROM boot mode, the ROM code will automatically enable the module.

All other modules come up enabled by default and there is no special software sequence to enable. For more detailed information on the PSC usage, see the *Power Sleep Controller (PSC) for KeyStone Devices User Guide* in "Related Documentation from Texas Instruments" on page 72.

3.3 Device State Control Registers

The TMS320C6678 device has a set of registers that are used to provide the status or configure certain parts of its peripherals. These registers are shown in Table 3-2.

Table 3-2 Device State Control Registers (Sheet 1 of 4)

Address Start	Address End	Size	Field	Description
0x02620000	0x02620007	8B	Reserved	
0x02620008	0x02620017	16B	Reserved	
0x02620018	0x0262001B	4B	JTAGID	See section 3.3.3
0x0262001C	0x0262001F	4B	Reserved	
0x02620020	0x02620023	4B	DEVSTAT	See section 3.3.1
0x02620024	0x02620037	20B	Reserved	
0x02620038	0x0262003B	4B	KICK0	See section 3.3.4
0x0262003C	0x0262003F	4B	KICK1	
0x02620040	0x02620043	4B	DSP_BOOT_ADDR0	The boot address for C66x DSP CorePac0, see section 3.3.5
0x02620044	0x02620047	4B	DSP_BOOT_ADDR1	The boot address for C66x DSP CorePac1, see section 3.3.5
0x02620048	0x0262004B	4B	DSP_BOOT_ADDR2	The boot address for C66x DSP CorePac2, see section 3.3.5
0x0262004C	0x0262004F	4B	DSP_BOOT_ADDR3	The boot address for C66x DSP CorePac3, see section 3.3.5
0x02620050	0x02620053	4B	DSP_BOOT_ADDR4	The boot address for C66x DSP CorePac4, see section 3.3.5
0x02620054	0x02620057	4B	DSP_BOOT_ADDR5	The boot address for C66x DSP CorePac5, see section 3.3.5
0x02620058	0x0262005B	4B	DSP_BOOT_ADDR6	The boot address for C66x DSP CorePac6, see section 3.3.5
0x0262005C	0x0262005F	4B	DSP_BOOT_ADDR7	The boot address for C66x DSP CorePac7, see section 3.3.5
0x02620060	0x026200DF	128B	Reserved	
0x026200E0	0x0262010F	48B	Reserved	
0x02620110	0x02620117	8B	MACID	See section 7.22 "Gigabit Ethernet (GbE) Switch Subsystem" on page 226
0x02620118	0x0262012F	24B	Reserved	
0x02620130	0x02620133	4B	LRSTNMIPINSTAT_CLR	See section 3.3.7
0x02620134	0x02620137	4B	RESET_STAT_CLR	See section 3.3.9
0x02620138	0x0262013B	4B	Reserved	
0x0262013C	0x0262013F	4B	BOOTCOMPLETE	See section 3.3.10
0x02620140	0x02620143	4B	Reserved	
0x02620144	0x02620147	4B	RESET_STAT	See section 3.3.8
0x02620148	0x0262014B	4B	LRSTNMIPINSTAT	See section 3.3.6

Copyright 2014 Texas Instruments Incorporated

Table 3-2 Device State Control Registers (Sheet 2 of 4)

Address Start	Address End	Size	Field	Description
0x0262014C	0x0262014F	4B	DEVCFG	See section 3.3.2
0x02620150	0x02620153	4B	PWRSTATECTL	See section 3.3.11
0x02620154	0x02620157	4B	SRIO_SERDES_STS	See "Related Documentation from Texas Instruments" on page 72
0x02620158	0x0262015B	4B	SMGII_SERDES_STS	
0x0262015C	0x0262015F	4B	PCIE_SERDES_STS	
0x02620160	0x02620163	4B	HYPERLINK_SERDES_STS	
0x02620164	0x02620167	4B	Reserved	
0x02620168	0x0262016B	4B	Reserved	
0x0262016C	0x0262017F	20B	Reserved	
0x02620180	0x02620183	4B	Reserved	
0x02620184	0x0262018F	12B	Reserved	
0x02620190	0x02620193	4B	Reserved	
0x02620194	0x02620197	4B	Reserved	
0x02620198	0x0262019B	4B	Reserved	
0x0262019C	0x0262019F	4B	Reserved	
0x026201A0	0x026201A3	4B	Reserved	
0x026201A4	0x026201A7	4B	Reserved	
0x026201A8	0x026201AB	4B	Reserved	
0x026201AC	0x026201AF	4B	Reserved	
0x026201B0	0x026201B3	4B	Reserved	
0x026201B4	0x026201B7	4B	Reserved	
0x026201B8	0x026201BB	4B	Reserved	
0x026201BC	0x026201BF	4B	Reserved	
0x026201C0	0x026201C3	4B	Reserved	
0x026201C4	0x026201C7	4B	Reserved	
0x026201C8	0x026201CB	4B	Reserved	
0x026201CC	0x026201CF	4B	Reserved	
0x026201D0	0x026201FF	48B	Reserved	
0x02620200	0x02620203	4B	NMIGR0	See section 3.3.12
0x02620204	0x02620207	4B	NMIGR1	
0x02620208	0x0262020B	4B	NMIGR2	
0x0262020C	0x0262020F	4B	NMIGR3	
0x02620210	0x02620213	4B	NMIGR4	
0x02620214	0x02620217	4B	NMIGR5	
0x02620218	0x0262021B	4B	NMIGR6	
0x0262021C	0x0262021F	4B	NMIGR7	
0x02620220	0x0262023F	32B	Reserved	

Table 3-2 Device State Control Registers (Sheet 3 of 4)

Address Start	Address End	Size	Field	Description
0x02620240	0x02620243	4B	IPCGR0	See section 3.3.13
0x02620244	0x02620247	4B	IPCGR1	
0x02620248	0x0262024B	4B	IPCGR2	
0x0262024C	0x0262024F	4B	IPCGR3	
0x02620250	0x02620253	4B	IPCGR4	
0x02620254	0x02620257	4B	IPCGR5	
0x02620258	0x0262025B	4B	IPCGR6	
0x0262025C	0x0262025F	4B	IPCGR7	
0x02620260	0x0262027B	28B	Reserved	
0x0262027C	0x0262027F	4B	IPCGRH	See section 3.3.15
0x02620280	0x02620283	4B	IPCAR0	See section 3.3.14
0x02620284	0x02620287	4B	IPCAR1	
0x02620288	0x0262028B	4B	IPCAR2	
0x0262028C	0x0262028F	4B	IPCAR3	
0x02620290	0x02620293	4B	IPCAR4	
0x02620294	0x02620297	4B	IPCAR5	
0x02620298	0x0262029B	4B	IPCAR6	
0x0262029C	0x0262029F	4B	IPCAR7	
0x026202A0	0x026202BB	28B	Reserved	
0x026202BC	0x026202BF	4B	IPCARH	See section 3.3.16
0x026202C0	0x026202FF	64B	Reserved	
0x02620300	0x02620303	4B	TINPSEL	See section 3.3.17
0x02620304	0x02620307	4B	TOUTPSEL	See section 3.3.18
0x02620308	0x0262030B	4B	RSTMUX0	See section 3.3.19
0x0262030C	0x0262030F	4B	RSTMUX1	
0x02620310	0x02620313	4B	RSTMUX2	
0x02620314	0x02620317	4B	RSTMUX3	
0x02620318	0x0262031B	4B	RSTMUX4	
0x0262031C	0x0262031F	4B	RSTMUX5	
0x02620320	0x02620323	4B	RSTMUX6	
0x02620324	0x02620327	4B	RSTMUX7	
0x02620328	0x0262032B	4B	MAINPLLCTL0	See section 7.6 "Main PLL and PLL Controller" on page 140
0x0262032C	0x0262032F	4B	MAINPLLCTL1	
0x02620330	0x02620333	4B	DDR3PLLCTL0	See section 7.7 "DD3 PLL" on page 153
0x02620334	0x02620337	4B	DDR3PLLCTL1	
0x02620338	0x0262033B	4B	PASSPLLCTL0	See section 7.8 "PASS PLL" on page 156
0x0262033C	0x0262033F	4B	PASSPLLCTL1	

Copyright 2014 Texas Instruments Incorporated

Table 3-2 Device State Control Registers (Sheet 4 of 4)

Address Start	Address End	Size	Field	Description
0x02620340	0x02620343	4B	SGMII_SERDES_CFGPLL	See "Related Documentation from Texas Instruments" on page 72
0x02620344	0x02620347	4B	SGMII_SERDES_CFGRX0	
0x02620348	0x0262034B	4B	SGMII_SERDES_CFGTX0	
0x0262034C	0x0262034F	4B	SGMII_SERDES_CFGRX1	
0x02620350	0x02620353	4B	SGMII_SERDES_CFGTX1	
0x02620354	0x02620357	4B	Reserved	
0x02620358	0x0262035B	4B	PCIE_SERDES_CFGPLL	
0x0262035C	0x0262035F	4B	Reserved	
0x02620360	0x02620363	4B	SRIO_SERDES_CFGPLL	
0x02620364	0x02620367	4B	SRIO_SERDES_CFGRX0	
0x02620368	0x0262036B	4B	SRIO_SERDES_CFGTX0	
0x0262036C	0x0262036F	4B	SRIO_SERDES_CFGRX1	
0x02620370	0x02620373	4B	SRIO_SERDES_CFGTX1	
0x02620374	0x02620377	4B	SRIO_SERDES_CFGRX2	
0x02620378	0x0262037B	4B	SRIO_SERDES_CFGTX2	
0x0262037C	0x0262037F	4B	SRIO_SERDES_CFGRX3	
0x02620380	0x02620383	4B	SRIO_SERDES_CFGTX3	
0x02620384	0x0262038B	8B	Reserved	
0x0262038C	0x0262038F	4B	DSP_SUSP_CTL	See section 3.3.20
0x02620390	0x026203B3	36B	Reserved	
0x026203B4	0x026203B7	4B	HYPERLINK_SERDES_CFGPLL	See "Related Documentation from Texas Instruments" on page 72
0x026203B8	0x026203BB	4B	HYPERLINK_SERDES_CFGRX0	
0x026203BC	0x026203BF	4B	HYPERLINK_SERDES_CFGTX0	
0x026203C0	0x026203C3	4B	HYPERLINK_SERDES_CFGRX1	
0x026203C4	0x026203C7	4B	HYPERLINK_SERDES_CFGTX1	
0x026203C8	0x026203CB	4B	HYPERLINK_SERDES_CFGRX2	
0x026203CC	0x026203CF	4B	HYPERLINK_SERDES_CFGTX2	
0x026203D0	0x026203D3	4B	HYPERLINK_SERDES_CFGRX3	
0x026203D4	0x026203D7	4B	HYPERLINK_SERDES_CFGTX3	
0x026203D8	0x026203DB	4B	Reserved	
0x026203DC	0x026203F7	28B	Reserved	
0x026203F8	0x026203FB	4B	DEVSPEED	See section 3.3.21
0x026203FC	0x026203FF	4B	Reserved	
0x02620400	0x02620403	4B	CHIP_MISC_CTL	See section 3.3.22
0x02620404	0x02620467	100B	Reserved	
End of Table 3-2				

3.3.1 Device Status Register

The Device Status Register depicts the device configuration selected upon a power-on reset by either the $\overline{\text{POR}}$ or $\overline{\text{RESETFULL}}$ pin. Once set, these bits will remain set until the next power-on reset. The Device Status Register is shown in Figure 3-1 and described in Table 3-3.

Figure 3-1 Device Status Register

31 18	17	16	15 14	13 1	0
Reserved	PACLKSEL	PCIESSEN	PCIESSMODE[1:0	BOOTMODE[12:0]	LENDIAN
R-0		R-x	R/W -xx	R/W-xxxxxxxxxxxx	R-x (1)

Legend: R = Read only; RW = Read/Write; -*n* = value after reset

1 x indicates the bootstrap value latched via the external pin

Table 3-3 Device Status Register Field Descriptions

Bit	Field	Description
31-18	Reserved	Reserved. Read only, writes have no effect.
17	PACLKSEL	PA Clock select to select the reference clock for PA Sub-System PLL 0 = Selects CORECLK(P/N) 1 = Selects PASSCLK(P/N)
16	PCIESSEN	PCIe module enable 0 = PCIe module disabled 1 = PCIe module enabled
15-14	PCIESSMODE[1:0]	PCIe Mode selection pins 00b = PCIe in end-point mode 01b = PCIe in legacy end-point mode (support for legacy INTx) 10b = PCIe in root complex mode 11b = Reserved
13-1	BOOTMODE[12:0]	Determines the bootmode configured for the device. For more information on bootmode, see Section 2.5 "Boot Modes Supported and PLL Settings" on page 24 and see the DSP *Bootloader for KeyStone Devices User Guide* in 2.10 "Related Documentation from Texas Instruments" on page 72
0	LENDIAN	Device endian mode (LENDIAN) — Shows the status of whether the system is operating in big endian mode or little endian mode. 0 = System is operating in big endian mode 1 = System is operating in little endian mode
End of Table 3-3		

Copyright 2014 Texas Instruments Incorporated

3.3.2 Device Configuration Register (DEVCFG)

The Device Configuration Register is one-time writeable through software. The register is reset on all hard resets and is locked after the first write. The Device Configuration Register is shown in Figure 3-2 and described in Table 3-4.

Figure 3-2 Device Configuration Register (DEVCFG)

31	1	0
Reserved		SYSCLKOUTEN
R-0		R/W-1

Legend: R = Read only; RW = Read/Write; -n = value after reset

Table 3-4 Device Configuration Register (DEVCFG) Field Descriptions

Bit	Field	Description
31-1	Reserved	Reserved. Read only, writes have no effect.
0	SYSCLKOUTEN	SYSCLKOUT Enable 0 = No clock output 1 = Clock output enabled (default)
End of Table 3-4		

3.3.3 JTAG ID Register (JTAGID) Description

The JTAG ID register is a read-only register that identifies to the customer the JTAG/Device ID. For the device, the JTAG ID register resides at address location 0x0262 0018. The JTAG ID Register is shown in Figure 3-3 and described in Table 3-5.

Figure 3-3 JTAG ID Register (JTAGID)

31 28	27 12	11 1	0
VARIANT	PART NUMBER	MANUFACTURER	LSB
R-xxxxb	R-0000 0000 1001 1110b	0000 0010 111b	R-1

Legend: RW = Read/Write; R = Read only; -n = value after reset

Table 3-5 JTAG ID Register (JTAGID) Field Descriptions

Bit	Field	Value	Description
31-28	VARIANT	xxxxb	Variant (4-bit) value.
27-12	PART NUMBER	0000 0000 1001 1110b	Part number for boundary scan
11-1	MANUFACTURER	0000 0010 111b	Manufacturer
0	LSB	1b	This bit is read as a 1 for TMS320C6678
End of Table 3-5			

Note—The value of the VARIANT and PART NUMBER fields depend on the silicon revision being used. See the Silicon Errata for details.

3.3.4 Kicker Mechanism Register (KICK0 and KICK1)

The Bootcfg module contains a kicker mechanism to prevent any spurious writes from changing any of the Bootcfg MMR values. When the kicker is locked (which it is initially after power on reset) none of the Bootcfg MMRs are writable (they are only readable). This mechanism requires two MMR writes to the KICK0 and KICK1 registers with exact data values before the kicker lock mechanism is un-locked. See Table 3-2 "Device State Control Registers" on page 74 for the address location. Once released then all the Bootcfg MMRs having "write" permissions are writable (the read-only MMRs are still read only). The first KICK0 data is 0x83e70b13. The second KICK1 data is 0x95a4f1e0. Writing any other data value to either of these kick MMRs will lock the kicker mechanism and block any writes to Bootcfg MMRs.

The kicker mechanism is unlocked by the ROM code. Do not write any other different values afterward to these registers because that will lock the kicker mechanism and block any writes to Bootcfg registers.

3.3.5 DSP Boot Address Register (DSP_BOOT_ADDRn)

The DSP_BOOT_ADDRn register stores the initial boot fetch address of CorePac_n (n = core number). The fetch address is the public ROM base address (for any boot mode) by default. DSP_BOOT_ADDRn register access should be permitted to any master or emulator when the device is non-secure. CorePac will boot from that address when a reset is performed. The DSP_BOOT_ADDRn register is shown in Figure 3-4 and described in Table 3-6.

Figure 3-4 DSP BOOT Address Register (DSP_BOOT_ADDRn)

31	10	9	0
DSP_BOOT_ADDR		Reserved	
RW-00100000101100000000000		R-0	

Legend: R = Read only; RW = Read/Write; -*n* = value after reset

Table 3-6 DSP BOOT Address Register (DSP_BOOT_ADDRn) Field Descriptions

Bit	Field	Description
31-10	DSP_BOOT_ADDR	Boot address of CorePac. CorePac will boot from that address when a reset is performed. The reset value is 22 MSBs of ROM base address = 0x20B00000.
9-0	Reserved	Reserved
End of Table 3-6		

3.3.6 LRESETNMI PIN Status Register (LRSTNMIPINSTAT)

The LRSTNMIPINSTAT Register is created in Boot Configuration to latch the status of $\overline{\text{LRESET}}$ and $\overline{\text{NMI}}$ based on CORESEL. The LRESETNMI PIN Status Register is shown in Figure 3-5 and described in Table 3-7.

Figure 3-5 LRESETNMI PIN Status Register (LRSTNMIPINSTAT)

31	16	15	14	13	12	11	10	9	8	7	6	5	4	3	2	1	0
Reserved		NMI7	NMI6	NMI5	NMI4	NMI3	NMI2	NMI1	NMI0	LR7	LR6	LR5	LR4	LR3	LR2	LR1	LR0
R -0000 0000 0000 0000		R-0	R-0	R-0	R-0	R-0	R-0	R-0	R-0	R-0	R-0	R-0	R-0	R-0	R-0	R-0	R-0

Legend: R = Read only; -*n* = value after reset

Copyright 2014 Texas Instruments Incorporated

Table 3-7 LRESETNMI PIN Status Register (LRSTNMIPINSTAT) Field Descriptions

Bit	Field	Description
31-16	Reserved	Reserved
15	NMI7	CorePac7 in NMI
14	NMI6	CorePac6 in NMI
13	NMI5	CorePac5 in NMI
12	NMI4	CorePac4 in NMI
11	NMI3	CorePac3 in NMI
10	NMI2	CorePac2 in NMI
9	NMI1	CorePac1 in NMI
8	NMI0	CorePac0 in NMI
7	LR7	CorePac7 in local reset
6	LR6	CorePac6 in local reset
5	LR5	CorePac5 in local reset
4	LR4	CorePac4 in local reset
3	LR3	CorePac3 in local reset
2	LR2	CorePac2 in local reset
1	LR1	CorePac1 in local reset
0	LR0	CorePac0 in local reset
End of Table 3-7		

3.3.7 LRESETNMI PIN Status Clear Register (LRSTNMIPINSTAT_CLR)

The LRSTNMIPINSTAT_CLR Register is used to clear the status of $\overline{\text{LRESET}}$ and $\overline{\text{NMI}}$ based on CORESEL. The LRESETNMI PIN Status Clear Register is shown in Figure 3-6 and described in Table 3-8

Figure 3-6 LRESETNMI PIN Status Clear Register (LRSTNMIPINSTAT_CLR)

31 16	15	14	13	12	11	10	9	8	7	6	5	4	3	2	1	0
Reserved	NMI7	NMI6	NMI5	NMI4	NMI3	NMI2	NMI1	NMI0	LR7	LR6	LR5	LR4	LR3	LR2	LR1	LR0
R -0000 0000 0000 0000	WC -0	WC -0	WC -0	WC -0	WC -0	WC -0	WC -0	WC -0	WC -0	WC -0	WC -0	WC -0	WC -0	WC -0	WC -0	WC -0

Legend: R = Read only; -*n* = value after reset; WC = Write 1 to Clear

Table 3-8 LRESETNMI PIN Status Clear Register (LRSTNMIPINSTAT_CLR) Field Descriptions (Sheet 1 of 2)

Bit	Field	Description
31-16	Reserved	Reserved
15	NMI7	CorePac7 in NMI clear
14	NMI6	CorePac6 in NMI clear
13	NMI5	CorePac5 in NMI clear
12	NMI4	CorePac4 in NMI clear
11	NMI3	CorePac3 in NMI clear
10	NMI2	CorePac2 in NMI clear
9	NMI1	CorePac1 in NMI clear
8	NMI0	CorePac0 in NMI clear
7	LR7	CorePac7 in local reset clear
6	LR6	CorePac6 in local reset clear

Table 3-8 LRESETNMI PIN Status Clear Register (LRSTNMIPINSTAT_CLR) Field Descriptions (Sheet 2 of 2)

Bit	Field	Description
5	LR5	CorePac5 in local reset clear
4	LR4	CorePac4 in local reset clear
3	LR3	CorePac3 in local reset clear
2	LR2	CorePac2 in local reset clear
1	LR1	CorePac1 in local reset clear
0	LR0	CorePac0 in local reset clear
End of Table 3-8		

Copyright 2014 Texas Instruments Incorporated

3.3.8 Reset Status Register (RESET_STAT)

The reset status register (RESET_STAT) captures the status of local reset (LRx) for each of the cores and also the global device reset (GR). Software can use this information to take different device initialization steps, if desired.

- **In case of local reset:** The LRx bits are written as 1 and GR bit is written as 0 only when the CorePac receives a local reset without receiving a global reset.
- **In case of global reset:** The LRx bits are written as 0 and GR bit is written as 1 only when a global reset is asserted.

The Reset Status Register is shown in Figure 3-7 and described in Table 3-9.

Figure 3-7 Reset Status Register (RESET_STAT)

31	30 8	7	6	5	4	3	2	1	0
GR	Reserved	LR7	LR6	LR5	LR4	LR3	LR2	LR1	LR0
R-1	R-00000000000000000000000	R-0	R-0	R-0	R-0	R-0	R-0	R-0	R-0

Legend: R = Read only; -*n* = value after reset

Table 3-9 Reset Status Register (RESET_STAT) Field Descriptions

Bit	Field	Description
31	GR	Global reset status 0 = Device has not received a global reset. 1 = Device received a global reset.
30-8	Reserved	Reserved
7	LR7	CorePac7 reset status 0 = CorePac7 has not received a local reset. 1 = CorePac7 received a local reset.
6	LR6	CorePac6 reset status 0 = CorePac6 has not received a local reset. 1 = CorePac6 received a local reset.
5	LR5	CorePac5 reset status 0 = CorePac5 has not received a local reset. 1 = CorePac5 received a local reset.
4	LR4	CorePac4 reset status 0 = CorePac4 has not received a local reset. 1 = CorePac4 received a local reset.
3	LR3	CorePac3 reset status 0 = CorePac3 has not received a local reset. 1 = CorePac3 received a local reset.
2	LR2	CorePac2 reset status 0 = CorePac2 has not received a local reset. 1 = CorePac2 received a local reset.
1	LR1	CorePac1 reset status 0 = CorePac1 has not received a local reset. 1 = CorePac1 received a local reset.
0	LR0	CorePac0 reset status 0 = CorePac0 has not received a local reset. 1 = CorePac0 received a local reset.
End of Table 3-9		

3.3.9 Reset Status Clear Register (RESET_STAT_CLR)

The RESET_STAT bits can be cleared by writing 1 to the corresponding bit in the RESET_STAT_CLR register. The Reset Status Clear Register is shown in Figure 3-8 and described in Table 3-10.

Figure 3-8 Reset Status Clear Register (RESET_STAT_CLR)

31	30 8	7	6	5	4	3	2	1	0
GR	Reserved	LR7	LR6	LR5	LR4	LR3	LR2	LR1	LR0
RW-0	R - 000 0000 0000 0000 0000 0000	RW-0	RW-0	RW-0	RW-0	RW-0	RW-0	RW-0	RW-0

Legend: R = Read only; RW = Read/Write; -*n* = value after reset

Table 3-10 Reset Status Clear Register (RESET_STAT_CLR) Field Descriptions

Bit	Field	Description
31	GR	Global reset clear bit 0 = Writing a 0 has no effect. 1 = Writing a 1 to the GR bit clears the corresponding bit in the RESET_STAT register.
30-8	Reserved	Reserved.
7	LR7	CorePac7 reset clear bit 0 = Writing a 0 has no effect. 1 = Writing a 1 to the LR3 bit clears the corresponding bit in the RESET_STAT register.
6	LR6	CorePac6 reset clear bit 0 = Writing a 0 has no effect. 1 = Writing a 1 to the LR3 bit clears the corresponding bit in the RESET_STAT register.
5	LR5	CorePac5 reset clear bit 0 = Writing a 0 has no effect. 1 = Writing a 1 to the LR3 bit clears the corresponding bit in the RESET_STAT register.
4	LR4	CorePac4 reset clear bit 0 = Writing a 0 has no effect. 1 = Writing a 1 to the LR3 bit clears the corresponding bit in the RESET_STAT register.
3	LR3	CorePac3 reset clear bit 0 = Writing a 0 has no effect. 1 = Writing a 1 to the LR3 bit clears the corresponding bit in the RESET_STAT register.
2	LR2	CorePac2 reset clear bit 0 = Writing a 0 has no effect. 1 = Writing a 1 to the LR2 bit clears the corresponding bit in the RESET_STAT register.
1	LR1	CorePac1 reset clear bit 0 = Writing a 0 has no effect. 1 = Writing a 1 to the LR1 bit clears the corresponding bit in the RESET_STAT register.
0	LR0	CorePac0 reset clear bit 0 = Writing a 0 has no effect. 1 = Writing a 1 to the LR0 bit clears the corresponding bit in the RESET_STAT register.
End of Table 3-10		

Copyright 2014 Texas Instruments Incorporated

3.3.10 Boot Complete Register (BOOTCOMPLETE)

The BOOTCOMPLETE register controls the BOOTCOMPLETE pin status. The purpose is to indicate the completion of the ROM booting process. The Boot Complete Register is shown in Figure 3-9 and described in Table 3-11.

Figure 3-9 Boot Complete Register (BOOTCOMPLETE)

31 8	7	6	5	4	3	2	1	0
Reserved	BC7	BC6	BC5	BC4	BC3	BC2	BC1	BC0
R-0000 0000 0000 0000 0000 0000	RW-0	RW-0	RW-0	RW-0	RW-0	RW-0	RW-0	RW-0

Legend: R = Read only; RW = Read/Write; *-n* = value after reset

Table 3-11 Boot Complete Register (BOOTCOMPLETE) Field Descriptions

Bit	Field	Description
31-8	Reserved	Reserved.
7	BC7	CorePac7 boot status 0 = CorePac7 boot NOT complete 1 = CorePac7 boot complete
6	BC6	CorePac6 boot status 0 = CorePac6 boot NOT complete 1 = CorePac6 boot complete
5	BC5	CorePac5 boot status 0 = CorePac5 boot NOT complete 1 = CorePac5 boot complete
4	BC4	CorePac4 boot status 0 = CorePac4 boot NOT complete 1 = CorePac4 boot complete
3	BC3	CorePac3 boot status 0 = CorePac3 boot NOT complete 1 = CorePac3 boot complete
2	BC2	CorePac2 boot status 0 = CorePac2 boot NOT complete 1 = CorePac2 boot complete
1	BC1	CorePac1 boot status 0 = CorePac1 boot NOT complete 1 = CorePac1 boot complete
0	BC0	CorePac0 boot status 0 = CorePac0 boot NOT complete 1 = CorePac0 boot complete
End of Table 3-11		

The BCx bit indicates the boot complete status of the corresponding core. All BCx bits will be sticky bits — that is they can be set only once by the software after device reset and they will be cleared to 0 on all device resets.

Boot ROM code will be implemented such that each core will set its corresponding BCx bit immediately before branching to the predefined location in memory.

3.3.11 Power State Control Register (PWRSTATECTL)

The PWRSTATECTL register is controlled by the software to indicate the power-saving mode. ROM code reads this register to differentiate between the various power saving modes. This register is cleared only by POR and will survive all other device resets. See the *Hardware Design Guide for KeyStone I Devices* in "Related Documentation from Texas Instruments" on page 72 for more information. The Power State Control Register is shown in Figure 3-10 and described in Table 3-12.

Figure 3-10 Power State Control Register (PWRSTATECTL)

31	3	2	1	0
GENERAL_PURPOSE		HIBERNATION_MODE	HIBERNATION	STANDBY
RW-0000 0000 0000 0000 0000 0000 0000 0		RW-0	RW-0	RW-0

Legend: RW = Read/Write; -*n* = value after reset

Table 3-12 Power State Control Register (PWRSTATECTL) Field Descriptions

Bit	Field	Description
31-3	GENERAL_PURPOSE	Used to provide a start address for execution out of the hibernation modes. See the *DSP Bootloader for KeyStone Devices User Guide* in "Related Documentation from Texas Instruments" on page 72.
2	HIBERNATION_MODE	Indicates whether the device is in hibernation mode 1 or mode 2. 0 = Hibernation mode 1 1 = Hibernation mode 2
1	HIBERNATION	Indicates whether the device is in hibernation mode or not. 0 = Not in hibernation mode 1 = Hibernation mode
0	STANDBY	Indicates whether the device is in standby mode or not. 0 = Not in standby mode 1 = Standby mode
End of Table 3-12		

3.3.12 NMI Event Generation to CorePac Register (NMIGRx)

NMIGRx registers are used for generating NMI events to the corresponding CorePac. The C6678 has eight NMIGRx registers (NMIGR0 through NMIGR7). The NMIGR0 register generates an NMI event to CorePac0, the NMIGR1 register generates an NMI event to CorePac1, and so on. Writing a 1 to the NMIG field generates a NMI pulse. Writing a 0 has no effect and reads return 0 and have no other effect. The NMI Even Generation to CorePac Register is shown in Figure 3-11 and described in Table 3-13.

Figure 3-11 NMI Generation Register (NMIGRx)

31	1	0
Reserved		NMIG
R-0000 0000 0000 0000 0000 0000 0000 000		RW-0

Legend: RW = Read/Write; -*n* = value after reset

Copyright 2014 Texas Instruments Incorporated

Table 3-13 NMI Generation Register (NMIGRx) Field Descriptions

Bit	Field	Description
31-1	Reserved	Reserved
0	NMIG	NMI pulse generation. Reads return 0 Writes: 0 = No effect 1 = Creates NMI pulse to the corresponding CorePac — CorePac0 for NMIGR0, etc.
End of Table 3-13		

3.3.13 IPC Generation Registers (IPCGRx)

IPCGRx are the IPC interrupt generation registers to facilitate inter CorePac interrupts.

The C6678 has eight IPCGRx registers (IPCGR0 through IPCGR7). These registers can be used by external hosts or CorePacs to generate interrupts to other CorePacs. A write of 1 to IPCG field of IPCGRx register will generate an interrupt pulse to CorePacx (0 <= x <= 7).

These registers also provide a *Source ID* facility by which up to 28 different sources of interrupts can be identified. Allocation of source bits to source processor and meaning is entirely based on software convention. The register field descriptions are given in the following tables. Virtually anything can be a source for these registers as this is completely controlled by software. Any master that has access to BOOTCFG module space can write to these registers. The IPC Generation Register is shown in Figure 3-12 and described in Table 3-14.

Figure 3-12 IPC Generation (IPCGRx) Registers

31	30	29	28	27 – 8	7	6	5	4	3 – 1	0
SRCS27	SRCS26	SRCS25	SRCS24	SRCS23 – SRCS4	SRCS3	SRCS2	SRCS1	SRCS0	Reserved	IPCG
RW-0	RW-0	RW-0	RW-0	RW-0 (per bit field)	RW-0	RW-0	RW-0	RW-0	R-000	RW-0

Legend: R = Read only; RW = Read/Write; -*n* = value after reset

Table 3-14 IPC Generation Registers (IPCGRx) Field Descriptions

Bit	Field	Description
31-4	SRCSx	Interrupt source indication. Reads return current value of internal register bit. Writes: 0 = No effect 1 = Sets both SRCSx and the corresponding SRCCx.
3-1	Reserved	Reserved
0	IPCG	Inter-DSP interrupt generation. Reads return 0. Writes: 0 = No effect 1 = Creates an Inter-DSP interrupt.
End of Table 3-14		

3.3.14 IPC Acknowledgement Registers (IPCARx)

IPCARx are the IPC interrupt-acknowledgement registers to facilitate inter-CorePac core interrupts.

The C6678 has eight IPCARx registers (IPCAR0 through IPCAR7). These registers also provide a *Source ID* facility by which up to 28 different sources of interrupts can be identified. Allocation of source bits to source processor and meaning is entirely based on software convention. The register field descriptions are shown in the following tables. Virtually anything can be a source for these registers as this is completely controlled by software. Any master that has access to BOOTCFG module space can write to these registers. The IPC Acknowledgement Register is shown in Figure 3-13 and described in Table 3-15.

Figure 3-13 IPC Acknowledgement (IPCARx) Registers

31	30	29	28	27 – 8	7	6	5	4	3 – 0
SRCC27	SRCC26	SRCC25	SRCC24	SRCC23 – SRCC4	SRCC3	SRCC2	SRCC1	SRCC0	Reserved
RW-0	RW-0	RW-0	RW-0	RW-0 (per bit field)	RW-0	RW-0	RW-0	RW-0	R-0000

Legend: R = Read only; RW = Read/Write; *-n* = value after reset

Table 3-15 IPC Acknowledgement Registers (IPCARx) Field Descriptions

Bit	Field	Description
31-4	SRCCx	Interrupt source acknowledgement. Reads return current value of internal register bit. Writes: 0 = No effect 1 = Clears both SRCCx and the corresponding SRCSx
3-0	Reserved	Reserved
End of Table 3-15		

3.3.15 IPC Generation Host Register (IPCGRH)

The IPCGRH register facilitates interrupts to external hosts. Operation and use of the IPCGRH register is the same as for other IPCGR registers. The interrupt output pulse created by the IPCGRH register appears on device pin HOUT.

The host interrupt output pulse is stretched so that it is asserted for four bootcfg clock (CPU/6) cycles followed by a deassertion of four bootcfg clock cycles. Generating the pulse results in a pulse-blocking window that is eight CPU/6-cycles long. Back to back writes to the IPCRGH register with the IPCG bit (bit 0) set, generates only one pulse if the back-to-back writes to IPCGRH are less than the eight CPU/6 cycle window -- the pulse blocking window. In order to generate back-to-back pulses, the back-to-back writes to the IPCGRH register must be greater than eight CPU/6 cycle window. The IPC Generation Host Register is shown in Figure 3-14 and described in Table 3-16.

Figure 3-14 IPC Generation (IPCGRH) Registers

31	30	29	28	27 – 8	7	6	5	4	3 – 1	0
SRCS27	SRCS26	SRCS25	SRCS24	SRCS23 – SRCS4	SRCS3	SRCS2	SRCS1	SRCS0	Reserved	IPCG
RW-0	RW-0	RW-0	RW-0	RW-0 (per bit field)	RW-0	RW-0	RW-0	RW-0	R-000	RW-0

Legend: R = Read only; RW = Read/Write; *-n* = value after reset

Copyright 2014 Texas Instruments Incorporated

Table 3-16 IPC Generation Registers (IPCGRH) Field Descriptions

Bit	Field	Description
31-4	SRCSx	Interrupt source indication. Reads return current value of internal register bit. Writes: 0 = No effect 1 = Sets both SRCSx and the corresponding SRCCx.
3-1	Reserved	Reserved
0	IPCG	Host interrupt generation. Reads return 0. Writes: 0 = No effect 1 = Creates an interrupt pulse on device pin (host interrupt/event output in HOUT pin)
End of Table 3-16		

3.3.16 IPC Acknowledgement Host Register (IPCARH)

IPCARH registers are provided to facilitate host DSP interrupt. Operation and use of IPCARH is the same as other IPCAR registers. The IPC Acknowledgement Host Register is shown in Figure 3-15 and described in Table 3-17.

Figure 3-15 IPC Acknowledgement Register (IPCARH)

31	30	29	28	27 – 8	7	6	5	4	3 – 0
SRCC27	SRCC26	SRCC25	SRCC24	SRCC23 – SRCC4	SRCC3	SRCC2	SRCC1	SRCC0	Reserved
RW-0	RW-0	RW-0	RW-0	RW-0 (per bit field)	RW-0	RW-0	RW-0	RW-0	R-0000

Legend: R = Read only; RW = Read/Write; -*n* = value after reset

Table 3-17 IPC Acknowledgement Register (IPCARH) Field Descriptions

Bit	Field	Description
31-4	SRCCx	Interrupt source acknowledgement. Reads return current value of internal register bit. Writes: 0 = No effect 1 = Clears both SRCCx and the corresponding SRCSx
3-0	Reserved	Reserved
End of Table 3-17		

3.3.17 Timer Input Selection Register (TINPSEL)

Timer input selection is handled within the control register TINPSEL. The Timer Input Selection Register is shown in Figure 3-16 and described in Table 3-18

Figure 3-16 Timer Input Selection Register (TINPSEL)

31	30	29	28	27	26	25	24	23	22	21	20	19	18	17	16
TINPHSEL15	TINPLSEL15	TINPHSEL14	TINPLSEL14	TINPHSEL13	TINPLSEL13	TINPHSEL12	TINPLSEL12	TINPHSEL11	TINPLSEL11	TINPHSEL10	TINPLSEL10	TINPHSEL9	TINPLSEL9	TINPHSEL8	TINPLSEL8
RW-1	RW-0	RW-1	RW-0	RW-1	RW-0	RW-1	RW-0	RW-1	RW-0	RW-1	RW-0	RW-1	RW-1	RW-1	RW-0

15	14	13	12	11	10	9	8	7	6	5	4	3	2	1	0
TINPHSEL7	TINPLSEL7	TINPHSEL6	TINPLSEL6	TINPHSEL5	TINPLSEL5	TINPHSEL4	TINPLSEL4	TINPHSEL3	TINPLSEL3	TINPHSEL2	TINPLSEL2	TINPHSEL1	TINPLSEL1	TINPHSEL0	TINPLSEL0
RW-1	RW-0	RW-1	RW-0	RW-1	RW-0	RW-1	RW-0	RW-1	RW-0	RW-1	RW-0	RW-1	RW-1	RW-1	RW-0

Legend: R = Read only; RW = Read/Write; *-n* = value after reset

Table 3-18 Timer Input Selection Field Description (TINPSEL) (Sheet 1 of 3)

Bit	Field	Description
31	TINPHSEL15	Input select for TIMER15 high. 0 = TIMI0 1 = TIMI1
30	TINPLSEL15	Input select for TIMER15 low. 0 = TIMI0 1 = TIMI1
29	TINPHSEL14	Input select for TIMER14 high. 0 = TIMI0 1 = TIMI1
28	TINPLSEL14	Input select for TIMER14 low. 0 = TIMI0 1 = TIMI1
27	TINPHSEL13	Input select for TIMER13 high. 0 = TIMI0 1 = TIMI1
26	TINPLSEL13	Input select for TIMER13 low. 0 = TIMI0 1 = TIMI1
25	TINPHSEL12	Input select for TIMER12 high. 0 = TIMI0 1 = TIMI1
24	TINPLSEL12	Input select for TIMER12 low. 0 = TIMI0 1 = TIMI1
23	TINPHSEL11	Input select for TIMER11 high. 0 = TIMI0 1 = TIMI1
22	TINPLSEL11	Input select for TIMER11 low. 0 = TIMI0 1 = TIMI1
21	TINPHSEL10	Input select for TIMER10 high. 0 = TIMI0 1 = TIMI1

Copyright 2014 Texas Instruments Incorporated

Table 3-18 Timer Input Selection Field Description (TINPSEL) (Sheet 2 of 3)

Bit	Field	Description
20	TINPLSEL10	Input select for TIMER10 low. 0 = TIMI0 1 = TIMI1
19	TINPHSEL9	Input select for TIMER9 high. 0 = TIMI0 1 = TIMI1
18	TINPLSEL9	Input select for TIMER9 low. 0 = TIMI0 1 = TIMI1
17	TINPHSEL8	Input select for TIMER8 high. 0 = TIMI0 1 = TIMI1
16	TINPLSEL8	Input select for TIMER8 low. 0 = TIMI0 1 = TIMI1
15	TINPHSEL7	Input select for TIMER7 high. 0 = TIMI0 1 = TIMI1
14	TINPLSEL7	Input select for TIMER7 low. 0 = TIMI0 1 = TIMI1
13	TINPHSEL6	Input select for TIMER6 high. 0 = TIMI0 1 = TIMI1
12	TINPLSEL6	Input select for TIMER6 low. 0 = TIMI0 1 = TIMI1
11	TINPHSEL5	Input select for TIMER5 high. 0 = TIMI0 1 = TIMI1
10	TINPLSEL5	Input select for TIMER5 low. 0 = TIMI0 1 = TIMI1
9	TINPHSEL4	Input select for TIMER4 high. 0 = TIMI0 1 = TIMI1
8	TINPLSEL4	Input select for TIMER4 low. 0 = TIMI0 1 = TIMI1
7	TINPHSEL3	Input select for TIMER3 high. 0 = TIMI0 1 = TIMI1
6	TINPLSEL3	Input select for TIMER3 low. 0 = TIMI0 1 = TIMI1
5	TINPHSEL2	Input select for TIMER2 high. 0 = TIMI0 1 = TIMI1
4	TINPLSEL2	Input select for TIMER2 low. 0 = TIMI0 1 = TIMI1

Copyright 2014 Texas Instruments Incorporated

Table 3-18 Timer Input Selection Field Description (TINPSEL) (Sheet 3 of 3)

Bit	Field	Description
3	TINPHSEL1	Input select for TIMER1 high. 0 = TIMI0 1 = TIMI1
2	TINPLSEL1	Input select for TIMER1 low. 0 = TIMI0 1 = TIMI1
1	TINPHSEL0	Input select for TIMER0 high. 0 = TIMI0 1 = TIMI1
0	TINPLSEL0	Input select for TIMER0 low. 0 = TIMI0 1 = TIMI1
End of Table 3-18		

Copyright 2014 Texas Instruments Incorporated

3.3.18 Timer Output Selection Register (TOUTPSEL)

The timer output selection is handled within the control register TOUTSEL. The Timer Output Selection Register is shown in Figure 3-17 and described in Table 3-19.

Figure 3-17 Timer Output Selection Register (TOUTPSEL)

31	10	9	5	4	0
Reserved		TOUTPSEL1		TOUTPSEL0	
R-00000000000000000000000		RW-00001		RW-00000	

Legend: R = Read only; RW = Read/Write; -*n* = value after reset

Table 3-19 Timer Output Selection Register (TOUTPSEL) Field Description

Bit	Field	Description
31-10	Reserved	Reserved
9-5	TOUTPSEL1	Output select for TIMO1 00000: TOUTL0 00001: TOUTH0 00010: TOUTL1 00011: TOUTH1 00100: TOUTL2 00101: TOUTH2 00110: TOUTL3 00111: TOUTH3 01000: TOUTL4 01001: TOUTH4 01010: TOUTL5 01011: TOUTH5 01100: TOUTL6 01101: TOUTH6 01110: TOUTL7 01111: TOUTH7 10000: TOUTL8 10001: TOUTH8 10010: TOUTL9 10011: TOUTH9 10100: TOUTL10 10101: TOUTH10 10110: TOUTL11 10111: TOUTH11 11000: TOUTL12 11001: TOUTH12 11010: TOUTL13 11011: TOUTH13 11100: TOUTL14 11101: TOUTH14 11110: TOUTL15 11111: TOUTH15
4-0	TOUTPSEL0	Output select for TIMO0 00000: TOUTL0 00001: TOUTH0 00010: TOUTL1 00011: TOUTH1 00100: TOUTL2 00101: TOUTH2 00110: TOUTL3 00111: TOUTH3 01000: TOUTL4 01001: TOUTH4 01010: TOUTL5 01011: TOUTH5 01100: TOUTL6 01101: TOUTH6 01110: TOUTL7 01111: TOUTH7 10000: TOUTL8 10001: TOUTH8 10010: TOUTL9 10011: TOUTH9 10100: TOUTL10 10101: TOUTH10 10110: TOUTL11 10111: TOUTH11 11000: TOUTL12 11001: TOUTH12 11010: TOUTL13 11011: TOUTH13 11100: TOUTL14 11101: TOUTH14 11110: TOUTL15 11111: TOUTH15
End of Table 3-19		

3.3.19 Reset Mux Register (RSTMUXx)

The software controls the Reset Mux block through the reset multiplex registers using RSTMUX0 through RSTMUX7 for each of the eight CorePacs on the C6678. These registers are located in Bootcfg memory space. The Reset Mux Register is shown in Figure 3-18 and described in Table 3-20.

Figure 3-18 Reset Mux Register (RSTMUXx)

31 10	9	8	7 5	4	3 1	0
Reserved	EVTSTATCLR	Reserved	DELAY	EVTSTAT	OMODE	LOCK
R-0000 0000 0000 0000 0000 00	RC-0	R-0	RW-100	R-0	RW-000	RW-0

Legend: R = Read only; RW = Read/Write; -*n* = value after reset; RC = Read only and write 1 to clear

Table 3-20 Reset Mux Register (RSTMUXx) Field Descriptions

Bit	Field	Description
31-10	Reserved	Reserved
9	EVTSTATCLR	Clear event status 0 = Writing 0 has no effect 1 = Writing 1 to this bit clears the EVTSTAT bit
8	Reserved	Reserved
7-5	DELAY	Delay cycles between NMI & local reset 000b = 256 CPU/6 cycles delay between NMI & local reset, when OMODE = 100b 001b = 512 CPU/6 cycles delay between NMI & local reset, when OMODE=100b 010b = 1024 CPU/6 cycles delay between NMI & local reset, when OMODE=100b 011b = 2048 CPU/6 cycles delay between NMI & local reset, when OMODE=100b 100b = 4096 CPU/6 cycles delay between NMI & local reset, when OMODE=100b (Default) 101b = 8192 CPU/6 cycles delay between NMI & local reset, when OMODE=100b 110b = 16384 CPU/6 cycles delay between NMI & local reset, when OMODE=100b 111b = 32768 CPU/6 cycles delay between NMI & local reset, when OMODE=100b
4	EVTSTAT	Event status. 0 = No event received (Default) 1 = WD timer event received by Reset Mux block
3-1	OMODE	Timer event operation mode 000b = WD timer event input to the reset mux block does not cause any output event (default) 001b = Reserved 010b = WD timer event input to the reset mux block causes local reset input to CorePac 011b = WD timer event input to the reset mux block causes NMI input to CorePac 100b = WD timer event input to the reset mux block causes NMI input followed by local reset input to CorePac. Delay between NMI and local reset is set in DELAY bit field. 101b = WD timer event input to the reset mux block causes device reset to C6678 110b = Reserved 111b = Reserved
0	LOCK	Lock register fields 0 = Register fields are not locked (default) 1 = Register fields are locked until the next timer reset
End of Table 3-20		

Copyright 2014 Texas Instruments Incorporated

3.3.20 DSP Suspension Control Register (DSP_SUSP_CTL)

The DSP Suspension Control Register controls the emulation suspension signals from DSP cores. The DSP Suspension Control Register is shown in Figure 3-19 and described in Table 3-21.

Figure 3-19 DSP Suspension Control Register (DSP_SUSP_CTL)

31	30	0
DSP_SUSP_CTL	Reserved	
R/W-0	R-0	

Legend: R = Read only; RW = Read/Write; -*n* = value after reset

Table 3-21 DSP Suspension Control Register (DSP_SUSP_CTL) Field Descriptions

Bit	Field	Description
31	DSP_SUSP_CTL	Control the combination of emulation suspension signals from DSP cores 0 = AND suspension signals from all DSP cores 1 = OR suspension signals from all DSP cores
30-0	Reserved	Reserved. Read only
End of Table 3-21		

3.3.21 Device Speed Register (DEVSPEED)

The Device Speed Register depicts the device speed grade. The Device Speed Register is shown below.

Figure 3-20 Device Speed Register (DEVSPEED)

31	23	22	0
DEVSPEED		Reserved	
R-n		R-n	

Legend: R = Read only; RW = Read/Write; -*n* = value after reset

Table 3-22 Device Speed Register (DEVSPEED) Field Descriptions

Bit	Field	Description
31-23	DEVSPEED	Indicates the speed of the device (read only) 0000 0000 0b = 800 MHz 0000 0000 1b = 1000 MHz 0000 0001 xb = 1200 MHz 0000 001x xb = 1250 MHz 0000 01xx xb = 1400 MHz 0000 1xxx xb = 1400 MHz 0001 xxxx xb = 1250 MHz 001x xxxx xb = 1200 MHz 01xx xxxx xb = 1000 MHz 1xxx xxxx xb = 800 MHz
22-0	Reserved	Reserved. Read only
End of Table 3-22		

3.3.22 Chip Miscellaneous Control Register (CHIP_MISC_CTL)

The Chip Miscellaneous Control Register is shown below.

Figure 3-21 Chip Miscellaneous Control Register (CHIP_MISC_CTL)

31	13	12	11	3	2	0
Reserved		MSMC_BLOCK_PARITY_RST	Reserved		QM_PRIORITY	
R/W-0000000000000000000		RW-0	R/W-001000011		RW-000	

Legend: R = Read only; R/W = Read/Write; -*n* = value after reset

Table 3-23 Chip Miscellaneous Control Register (CHIP_MISC_CTL) Field Descriptions

Bit	Field	Description
31-13	Reserved	Reserved.
12	MSMC_BLOCK_PARITY_RST	Controls MSMC parity RAM reset. When set to 1, it means the MSMC parity RAM will not be reset.
11-3	Reserved	Reserved.
2-0	QM_PRIORITY	Control the priority level for the transactions from QM Packet DMA master port, which access the external linking RAM.
End of Table 3-23		

Copyright 2014 Texas Instruments Incorporated

3.4 Pullup/Pulldown Resistors

Proper board design should ensure that input pins to the device always be at a valid logic level and not floating. This may be achieved via pullup/pulldown resistors. The device features internal pullup (IPU) and internal pulldown (IPD) resistors on most pins to eliminate the need, unless otherwise noted, for external pullup/pulldown resistors.

An external pullup/pulldown resistor must be used in the following situations:

- **Device Configuration Pins:** If the pin is both routed out and are not driven (in Hi-Z state), an external pullup/pulldown resistor must be used, even if the IPU/IPD matches the desired value/state.
- **Other Input Pins:** If the IPU/IPD does not match the desired value/state, use an external pullup/pulldown resistor to pull the signal to the opposite rail.

For the device configuration pins (listed in Table 3-1), if they are both routed out and are not driven (in Hi-Z state), it is strongly recommended that an external pullup/pulldown resistor be implemented. Although, internal pullup/pulldown resistors exist on these pins and they may match the desired configuration value, providing external connectivity can help ensure that valid logic levels are latched on these device configuration pins. In addition, applying external pullup/pulldown resistors on the device configuration pins adds convenience to the user in debugging and flexibility in switching operating modes.

Tips for choosing an external pullup/pulldown resistor:

- Consider the total amount of current that may pass through the pullup or pulldown resistor. Make sure to include the leakage currents of all the devices connected to the net, as well as any internal pullup or pulldown resistors.
- Decide a target value for the net. For a pulldown resistor, this should be below the lowest V_{IL} level of all inputs connected to the net. For a pullup resistor, this should be above the highest V_{IH} level of all inputs on the net. A reasonable choice would be to target the V_{OL} or V_{OH} levels for the logic family of the limiting device; which, by definition, have margin to the V_{IL} and V_{IH} levels.
- Select a pullup/pulldown resistor with the largest possible value that can still ensure that the net will reach the target pulled value when maximum current from all devices on the net is flowing through the resistor. The current to be considered includes leakage current plus, any other internal and external pullup/pulldown resistors on the net.
- For bidirectional nets, there is an additional consideration that sets a lower limit on the resistance value of the external resistor. Verify that the resistance is small enough that the weakest output buffer can drive the net to the opposite logic level (including margin).
- Remember to include tolerances when selecting the resistor value.
- For pullup resistors, also remember to include tolerances on the DV_{DD} rail.

For most systems:

- A 1-kΩ resistor can be used to oppose the IPU/IPD while meeting the above criteria. Users should confirm this resistor value is correct for their specific application.
- A 20-kΩ resistor can be used to compliment the IPU/IPD on the device configuration pins while meeting the above criteria. Users should confirm this resistor value is correct for their specific application.

For more detailed information on input current (I_I), and the low-level/high-level input voltages (V_{IL} and V_{IH}) for the TMS320C6678 device, see Section 6.3 "Electrical Characteristics" on page 118.

To determine which pins on the device include internal pullup/pulldown resistors, see Table 2-26 "Terminal Functions — Signals and Control by Function" on page 44.

4 System Interconnect

On the TMS320C6678 device, the C66x CorePacs, the EDMA3 transfer controllers, and the system peripherals are interconnected through the TeraNet, which is a non-blocking switch fabric enabling fast and contention-free internal data movement. The TeraNet allows for low-latency, concurrent data transfers between master peripherals and slave peripherals. The TeraNet also allows for seamless arbitration between the system masters when accessing system slaves.

4.1 Internal Buses and Switch Fabrics

Two types of buses exist in the device: data buses and configuration buses. Some peripherals have both a data bus and a configuration bus interface, while others have only one type of interface. Further, the bus interface width and speed varies from peripheral to peripheral. Configuration buses are mainly used to access the register space of a peripheral and the data buses are used mainly for data transfers.

The C66x CorePacs, the EDMA3 traffic controllers, and the various system peripherals can be classified into two categories: masters and slaves. Masters are capable of initiating read and write transfers in the system and do not rely on the EDMA3 for their data transfers. Slaves, on the other hand, rely on the masters to perform transfers to and from them. Examples of masters include the EDMA3 traffic controllers, SRIO, and Network Coprocessor packet DMA. Examples of slaves include the SPI, UART, and I^2C.

The masters and slaves in the device are communicating through the TeraNet (switch fabric). The device contains two switch fabrics. The data switch fabric (data TeraNet) and the configuration switch fabric (configuration TeraNet). The data TeraNet, is a high-throughput interconnect mainly used to move data across the system. The data TeraNet connects masters to slaves via data buses. Some peripherals require a bridge to connect to the data TeraNet. The configuration TeraNet, is mainly used to access peripheral registers. The configuration TeraNet connects masters to slaves via configuration buses. As with the data TeraNet, some peripherals require the use of a bridge to interface to the configuration TeraNet. Note that the data TeraNet also connects to the configuration TeraNet. For more details see 4.2 "Switch Fabric Connections".

Copyright 2014 Texas Instruments Incorporated

4.2 Switch Fabric Connections

The following figures show the connections between masters and slaves on TeraNet 2A and TeraNet 3A.

Figure 4-1 TeraNet 2A for C6678

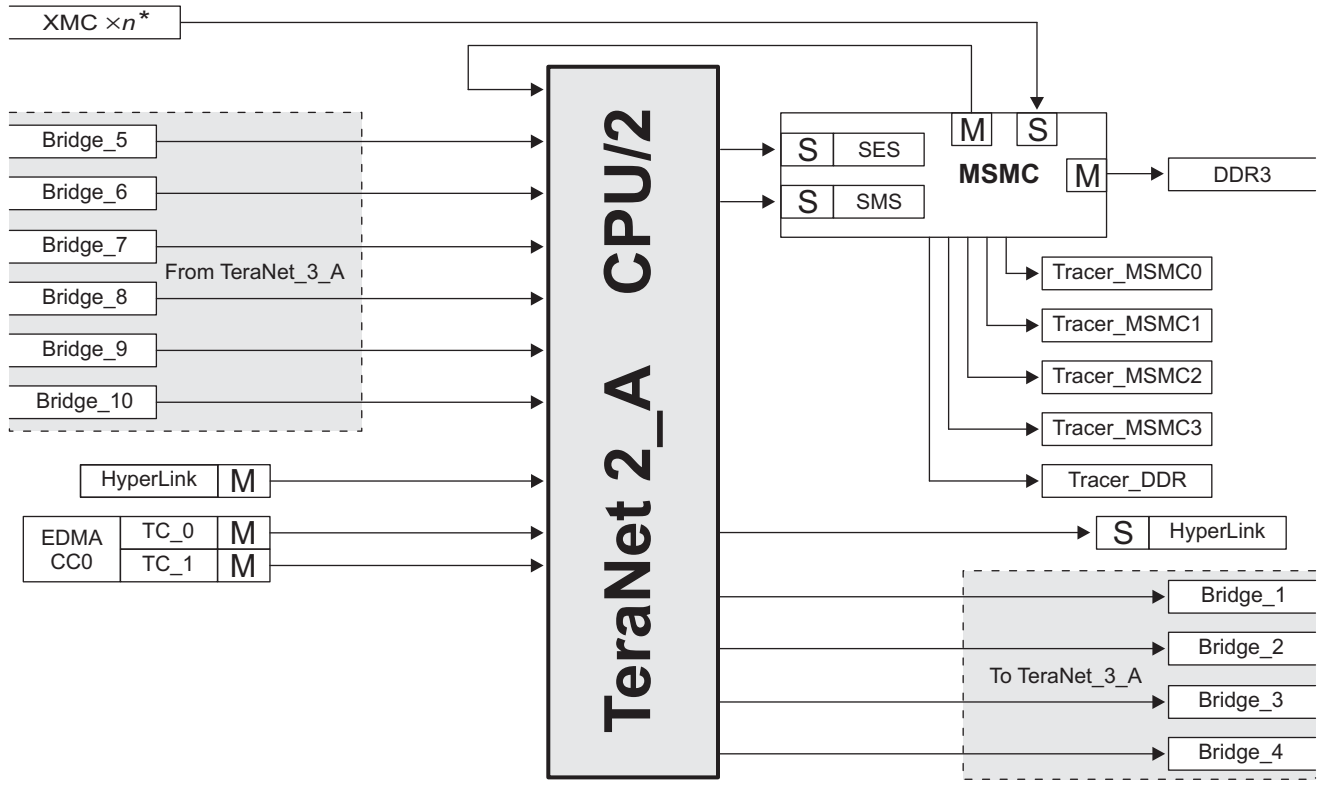

* *n* varies with the number of CorePacs present in the specific device.

Figure 4-2 TeraNet 3A for C6678

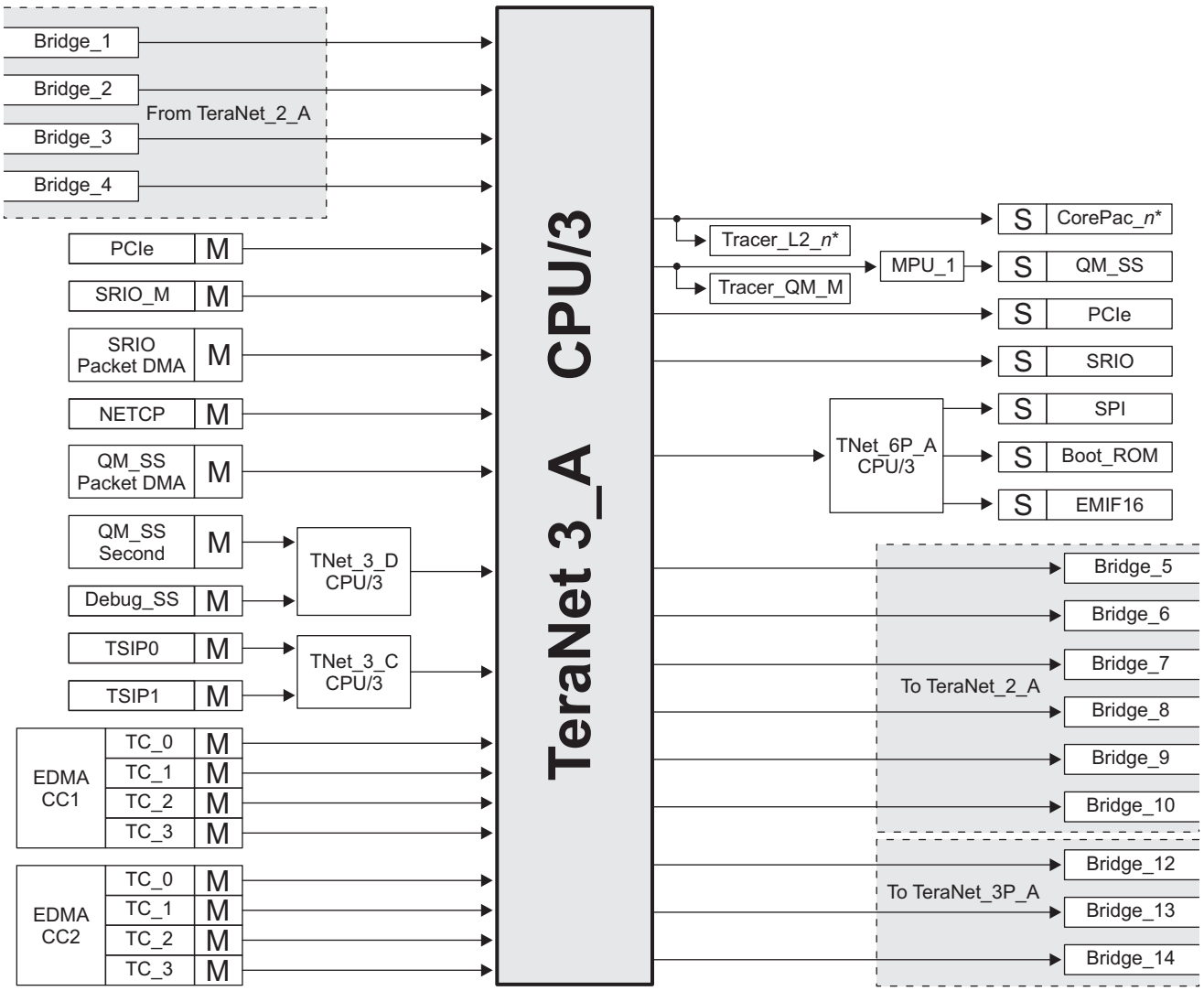

* *n* varies with the number of CorePacs present in the specific device.

Copyright 2014 Texas Instruments Incorporated

Allowed connections on TeraNet 2A and TeraNet 3A are summarized in the table below.

Intersecting cells may contain one of the following:

- **Y** — There is a direct connection between this master and that slave.
- **-** — There is NO connection between this master and that slave.
- ***n*** — A numeric value indicates that the path between this master and that slave goes through bridge *n*.

Table 4-1 Switch Fabric Connection Matrix Section 1

Masters	Slaves																
	HyperLink_Slave	MSMC_SES	MSMC_SMS	CorePac0_SDMA	CorePac1_SDMA	CorePac2_SDMA	CorePac3_SDMA	CorePac4_SDMA	CorePac5_SDMA	CorePac6_SDMA	CorePac7_SDMA	SRIO_Slave	Boot_ROM	SPI	EMIF16	PCIe_Slave	QM_Slave
HyperLink_Master	-	Y	Y	1	1	1	1	1	1	1	1	1	1	1	1	1	1
EDMA3CC0_TC0_RD	Y	Y	Y	2	2	2	2	2	2	2	2	2	2	2	2	2	-
EDMA3CC0_TC0_WR	Y	Y	Y	2	2	2	2	2	2	2	2	2	-	2	2	2	-
EDMA3CC0_TC1_RD	Y	Y	Y	3	3	3	3	3	3	3	3	3	3	3	3	3	-
EDMA3CC0_TC1_WR	Y	Y	Y	3	3	3	3	3	3	3	3	3	-	3	3	3	-
EDMA3CC1_TC0_RD	5	5	5	Y	Y	Y	Y	Y	Y	Y	Y	Y	Y	Y	Y	Y	-
EDMA3CC1_TC0_WR	5	5	5	Y	Y	Y	Y	Y	Y	Y	Y	Y	-	Y	Y	Y	-
EDMA3CC1_TC1_RD	6	6	6	Y	Y	Y	Y	Y	Y	Y	Y	Y	Y	Y	Y	Y	Y
EDMA3CC1_TC1_WR	6	6	6	Y	Y	Y	Y	Y	Y	Y	Y	Y	-	Y	Y	Y	Y
EDMA3CC1_TC2_RD	7	7	7	Y	Y	Y	Y	Y	Y	Y	Y	Y	Y	Y	Y	Y	-
EDMA3CC1_TC2_WR	7	7	7	Y	Y	Y	Y	Y	Y	Y	Y	Y	-	Y	Y	Y	-
EDMA3CC1_TC3_RD	8	8	8	Y	Y	Y	Y	Y	Y	Y	Y	Y	Y	Y	Y	Y	-
EDMA3CC1_TC3_WR	8	8	8	Y	Y	Y	Y	Y	Y	Y	Y	Y	-	Y	Y	Y	-
EDMA3CC2_TC0_RD	9	9	9	Y	Y	Y	Y	Y	Y	Y	Y	Y	Y	Y	Y	Y	-
EDMA3CC2_TC0_WR	9	9	9	Y	Y	Y	Y	Y	Y	Y	Y	Y	-	Y	Y	Y	-
EDMA3CC2_TC1_RD	10	10	10	Y	Y	Y	Y	Y	Y	Y	Y	Y	Y	Y	Y	Y	Y
EDMA3CC2_TC1_WR	10	10	10	Y	Y	Y	Y	Y	Y	Y	Y	Y	-	Y	Y	Y	Y
EDMA3CC2_TC2_RD	5	5	5	Y	Y	Y	Y	Y	Y	Y	Y	Y	Y	Y	Y	Y	-
EDMA3CC2_TC2_WR	5	5	5	Y	Y	Y	Y	Y	Y	Y	Y	Y	-	Y	Y	Y	-
EDMA3CC2_TC3_RD	6	6	6	Y	Y	Y	Y	Y	Y	Y	Y	Y	Y	Y	Y	Y	-
EDMA3CC2_TC3_WR	6	6	6	Y	Y	Y	Y	Y	Y	Y	Y	Y	-	Y	Y	Y	-
SRIO packet DMA	-	9	9	Y	Y	Y	Y	Y	Y	Y	Y	-	-	-	Y	-	Y
SRIO_Master	9	9	9	Y	Y	Y	Y	Y	Y	Y	Y	-	-	Y	Y	-	Y
PCIe_Master	7	7	7	Y	Y	Y	Y	Y	Y	Y	Y	-	-	Y	Y	-	Y
NETCP packet DMA	-	10	10	Y	Y	Y	Y	Y	Y	Y	Y	-	-	-	-	-	Y
MSMC_Data_Master	Y	-	-	4	4	4	4	4	4	4	4	4	4	4	4	4	4
QM Packet DMA	8	8	8	Y	Y	Y	Y	Y	Y	Y	Y	-	-	-	-	-	Y
QM Second	8	8	8	Y	Y	Y	Y	Y	Y	Y	Y	-	-	-	-	-	-
DebugSS_Master	10	10	10	Y	Y	Y	Y	Y	Y	Y	Y	Y	Y	Y	Y	Y	Y
TSIP0_Master	-	5	5	Y	Y	Y	Y	Y	Y	Y	Y	-	-	-	-	-	-
TSIP1_Master	-	5	5	Y	Y	Y	Y	Y	Y	Y	Y	-	-	-	-	-	-
End of Table 4-1																	

The following figure shows the connection between masters and slaves on TeraNet 3P and TeraNet 6P.

Figure 4-3 TeraNet 3P_A & B for C6678

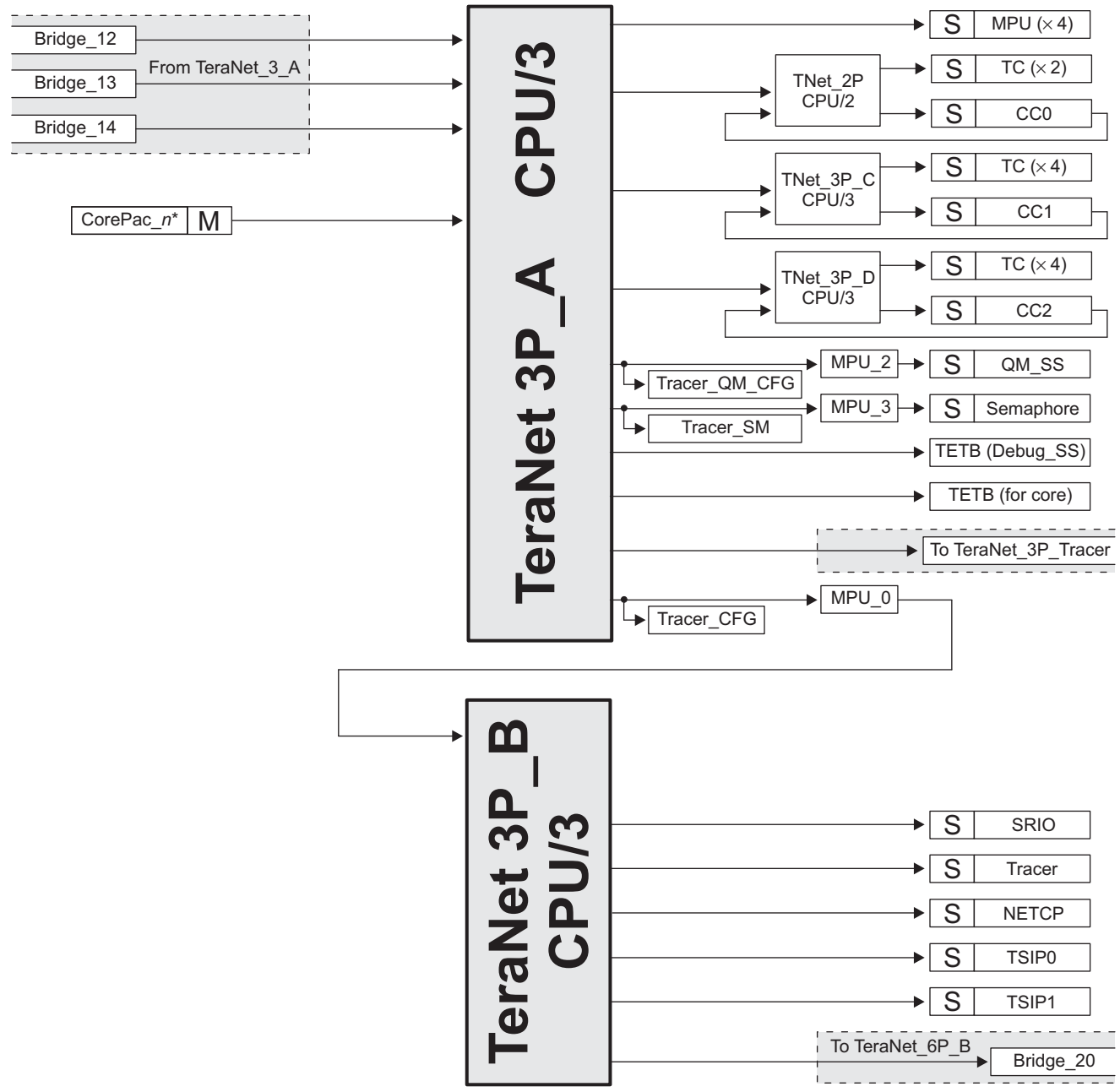

* *n* varies with the number of CorePacs present in the specific device.

Copyright 2014 Texas Instruments Incorporated

Figure 4-4 TeraNet 6P_B and 3P_Tracer for C6678

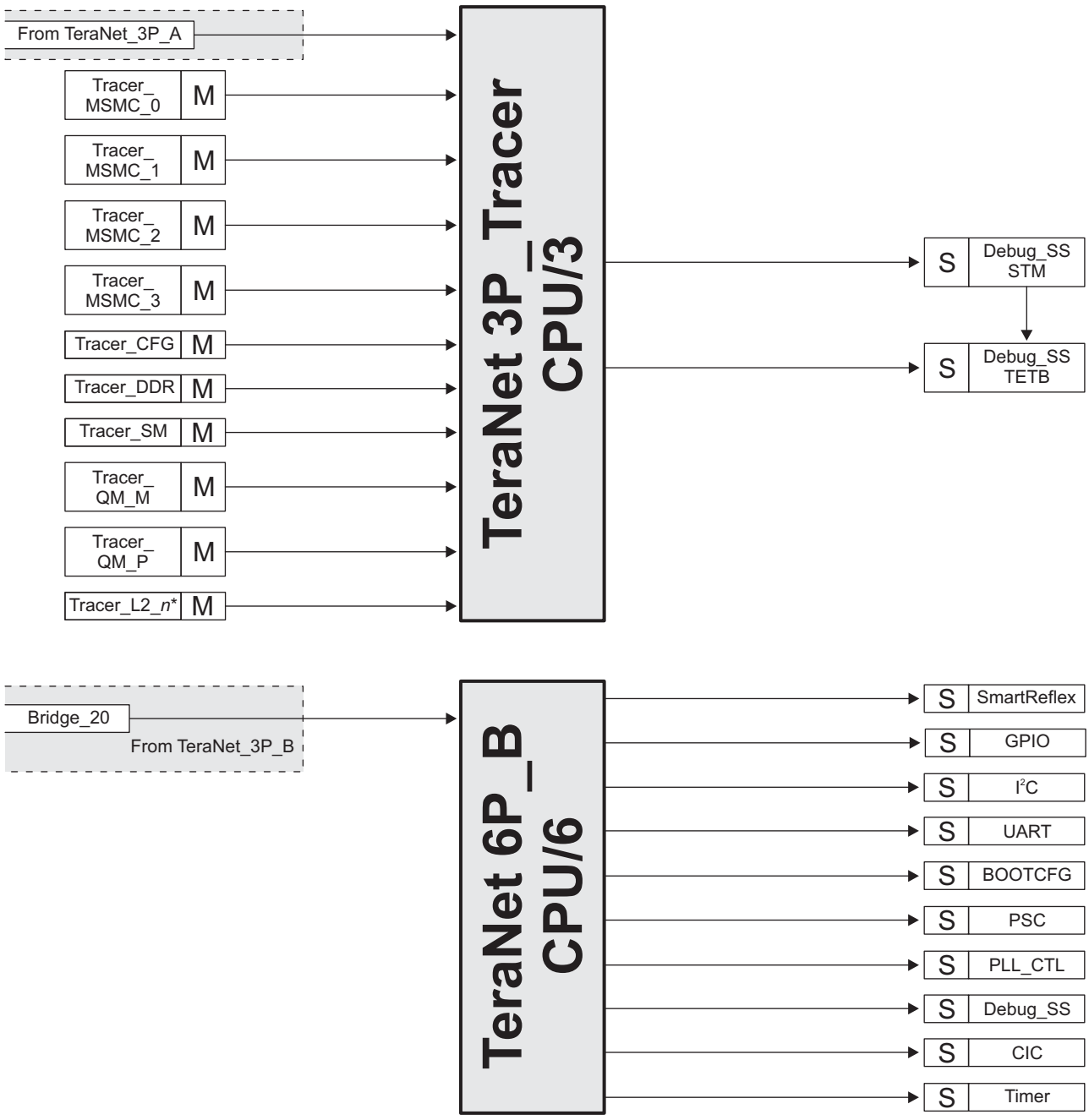

* *n* varies with the number of CorePacs present in the specific device.

Allowed connections on TeraNet 3P and TeraNet 6P are summarized in the tables below.

Intersecting cells may contain one of the following:

- **Y** — There is a direct connection between this master and that slave.
- **-** — There is NO connection between this master and that slave.
- ***n*** — A numeric value indicates that the path between this master and that slave goes through bridge *n*.

Table 4-2 Switch Fabric Connection Matrix Section 2 (Sheet 1 of 2)

Masters	Slave															
	EDMA3CC0	EDMA3CC1	EDMA3CC2	EDMA3CC0_TC(0-1)	EDMA3CC1_TC(0-3)	EDMA3CC2_TC(0-3)	SRIO_CFG	NETCP_CFG	TSIP_CFG	QM__CFG	UART_CFG	Boot_CFG	PSC	PLL	CIC	Timer
HyperLink_Master	1,12	1,12	1,12	1,12	1,12	1,12	1,12	1,12	1,12	1,12	1,12	1,12	1,12	1,12	1,12	1,12
EDMA3CC0_TC0_RD	2,12	2,12	2,12	2,12	2,12	2,12	-	-	-	-	-	-	-	-	-	-
EDMA3CC0_TC0_WR	2,12	2,12	2,12	2,12	2,12	2,12	-	-	-	-	-	-	-	-	-	-
EDMA3CC0_TC1_RD	3,12	3,12	3,12	3,12	3,12	3,12	-	-	-	-	-	-	-	-	-	-
EDMA3CC0_TC1_WR	3,12	3,12	3,12	3,12	3,12	3,12	-	-	-	-	-	-	-	-	-	-
EDMA3CC1_TC0_RD	12	12	12	12	12	12	12	12	12	12	12	12	12	12	12	12
EDMA3CC1_TC0_WR	12	12	12	12	12	12	12	12	12	12	12	12	12	12	12	12
EDMA3CC1_TC1_RD	13	13	13	13	13	13	-	-	-	-	-	-	-	-	-	-
EDMA3CC1_TC1_WR	13	13	13	13	13	13	-	-	-	-	-	-	-	-	-	-
EDMA3CC1_TC2_RD	14	14	14	14	14	14	-	-	-	-	-	-	-	-	-	-
EDMA3CC1_TC2_WR	14	14	14	14	14	14	-	-	-	-	-	-	-	-	-	-
EDMA3CC1_TC3_RD	12	12	12	12	12	12	12	12	12	12	12	12	12	12	12	12
EDMA3CC1_TC3_WR	12	12	12	12	12	12	12	12	12	12	12	12	12	12	12	12
EDMA3CC2_TC0_RD	12	12	12	12	12	12	12	12	12	12	12	12	12	12	12	12
EDMA3CC2_TC0_WR	12	12	12	12	12	12	12	12	12	12	12	12	12	12	12	12
EDMA3CC2_TC1_RD	13	13	13	13	13	13	-	-	-	-	-	-	-	-	-	-
EDMA3CC2_TC1_WR	13	13	13	13	13	13	-	-	-	-	-	-	-	-	-	-
EDMA3CC2_TC2_RD	12	12	12	12	12	12	12	12	12	12	12	12	12	12	12	12
EDMA3CC2_TC2_WR	12	12	12	12	12	12	12	12	12	12	12	12	12	12	12	12
EDMA3CC2_TC3_RD	14	14	14	14	14	14	-	-	-	-	-	-	-	-	-	-
EDMA3CC2_TC3_WR	14	14	14	14	14	14	-	-	-	-	-	-	-	-	-	-
SRIO packet DMA	-	-	-	-	-	-	-	-	-	-	-	-	-	-	-	-
SRIO_Master	12	12	12	12	12	12	12	12	12	12	12	12	12	12	12	12
PCIe_Master	12	12	12	12	12	12	12	12	12	12	12	12	12	12	12	12
NETCP packet DMA	-	-	-	-	-	-	-	-	-	-	-	-	-	-	-	-
MSMC_Data_Master	-	-	-	-	-	-	-	-	-	-	-	-	-	-	-	-
QM Packet DMA	-	-	-	-	-	-	-	-	-	-	-	-	-	-	-	-
QM Second	-	-	-	-	-	-	-	-	-	-	-	-	-	-	-	-
DebugSS_Master	12	12	12	12	12	12	12	12	12	12	12	12	12	12	12	12
TSIP0_Master	-	-	-	-	-	-	-	-	-	-	-	-	-	-	-	-
TSIP1_Master	-	-	-	-	-	-	-	-	-	-	-	-	-	-	-	-
EDMA3CC0	-	-	-	Y	-	-	-	-	-	-	-	-	-	-	-	-

Copyright 2014 Texas Instruments Incorporated

Table 4-2 Switch Fabric Connection Matrix Section 2 (Sheet 2 of 2)

Masters	Slave															
	EDMA3CC0	EDMA3CC1	EDMA3CC2	EDMA3CC0_TC(0-1)	EDMA3CC1_TC(0-3)	EDMA3CC2_TC(0-3)	SRIO_CFG	NETCP_CFG	TSIP_CFG	QM__CFG	UART_CFG	Boot_CFG	PSC	PLL	CIC	Timer
EDMA3CC1	-	-	-	-	Y	-	-	-	-	-	-	-	-	-	-	-
EDMA3CC2	-	-	-	-	-	Y	-	-	-	-	-	-	-	-	-	-
CorePac0_CFG	Y	Y	Y	Y	Y	Y	Y	Y	Y	Y	Y	Y	Y	Y	Y	Y
CorePac1_CFG	Y	Y	Y	Y	Y	Y	Y	Y	Y	Y	Y	Y	Y	Y	Y	Y
CorePac2_CFG	Y	Y	Y	Y	Y	Y	Y	Y	Y	Y	Y	Y	Y	Y	Y	Y
CorePac3_CFG	Y	Y	Y	Y	Y	Y	Y	Y	Y	Y	Y	Y	Y	Y	Y	Y
CorePac4_CFG	Y	Y	Y	Y	Y	Y	Y	Y	Y	Y	Y	Y	Y	Y	Y	Y
CorePac5_CFG	Y	Y	Y	Y	Y	Y	Y	Y	Y	Y	Y	Y	Y	Y	Y	Y
CorePac6_CFG	Y	Y	Y	Y	Y	Y	Y	Y	Y	Y	Y	Y	Y	Y	Y	Y
CorePac7_CFG	Y	Y	Y	Y	Y	Y	Y	Y	Y	Y	Y	Y	Y	Y	Y	Y
End of Table 4-2																

Table 4-3 Switch Fabric Connection Matrix Section 3 (Sheet 1 of 2)

Masters	Slave															
	GPIO	I^2C	Semaphore	SmartReflex	MPU	Tracer	Debug_SS_CFG	TETB_System	TETB0	TETB1	TETB2	TETB3	TETB4	TETB5	TETB6	TETB7
HyperLink_Master	1,12	1,12	1,12	1,12	1,12	1,12	1,12	-	-	-	-	-	-	-	-	-
EDMA3CC0_TC0_RD	-	-	-	-	-	-	-	2,12	-	-	-	-	2,12	2,12		
EDMA3CC0_TC0_WR	-	-	-	-	-	-	-	-	-	-	-	-	-	-	-	-
EDMA3CC0_TC1_RD	-	-	-	-	-	-	-	3,12	-	-	-	-	3,12	3,12	-	-
EDMA3CC0_TC1_WR	-	-	-	-	-	-	-	-	-	-	-	-	-	-	-	-
EDMA3CC1_TC0_RD	12	12	12	12	12	12	12	12	-	-	-	-	12	12	-	-
EDMA3CC1_TC0_WR	12	12	12	12	12	12	12	-	-	-	-	-	-	-	-	-
EDMA3CC1_TC1_RD	-	-	-	-	-	-	-	-	13	13	-	-	-	-	13	-
EDMA3CC1_TC1_WR	-	-	-	-	-	-	-	-	-	-	-	-	-	-	-	-
EDMA3CC1_TC2_RD	-	-	-	-	-	-	-	-	-	-	14	14	-	-	-	14
EDMA3CC1_TC2_WR	-	-	-	-	-	-	-	-	-	-	-	-	-	-	-	-
EDMA3CC1_TC3_RD	12	12	12	12	12	12	12	12	-	-	-	-	12	12	-	-
EDMA3CC1_TC3_WR	12	12	12	12	12	12	12	-	-	-	-	-	-	-	-	-
EDMA3CC2_TC0_RD	12	12	12	12	12	12	12	12	-	-	-	-	12	12	-	-
EDMA3CC2_TC0_WR	12	12	12	12	12	12	12	-	-	-	-	-	-	-	-	-
EDMA3CC2_TC1_RD	-	-	-	-	-	-	-	-	13	13	-	-	-	-	13	-
EDMA3CC2_TC1_WR	-	-	-	-	-	-	-	-	-	-	-	-	-	-	-	-
EDMA3CC2_TC2_RD	12	12	12	12	12	12	12	12	-	-	-	-	12	12	-	-
EDMA3CC2_TC2_WR	12	12	12	12	12	12	12	-	-	-	-	-	-	-	-	-

Table 4-3 Switch Fabric Connection Matrix Section 3 (Sheet 2 of 2)

Masters	Slave															
	GPIO	I^2C	Semaphore	SmartReflex	MPU	Tracer	Debug_SS_CFG	TETB_System	TETB0	TETB1	TETB2	TETB3	TETB4	TETB5	TETB6	TETB7
EDMA3CC2_TC3_RD	-	-	-	-	-	-	-	-	-	-	14	14	-	-	-	14
EDMA3CC2_TC3_WR	-	-	-	-	-	-	-	-	-	-	-	-	-	-	-	-
SRIO packet DMA	-	-	-	-	-	-	-	-	-	-	-	-	-	-	-	-
SRIO_Master	12	12	12	12	12	12	12	12	12	12	12	12	12	12	12	12
PCIe_Master	12	12	12	12	12	12	12	12	12	12	12	12	12	12	12	12
NETCP packet DMA	-	-	-	-	-	-	-	-	-	-	-	-	-	-	-	-
MSMC_Data_Master	-	-	-	-	-	-	-	-	-	-	-	-	-	-	-	-
QM Packet DMA	-	-	-	-	-	-	-	-	-	-	-	-	-	-	-	-
QM Second	-	-	-	-	-	-	-	-	-	-	-	-	-	-	-	-
DebugSS_Master	12	12	12	12	12	12	12	12	12	12	12	12	12	12	12	12
TSIP0_Master	-	-	-	-	-	-	-	-	-	-	-	-	-	-	-	-
TSIP1_Master	-	-	-	-	-	-	-	-	-	-	-	-	-	-	-	-
EDMA3CC0	-	-	-	-	-	-	-	-	-	-	-	-	-	-	-	-
EDMA3CC1	-	-	-	-	-	-	-	-	-	-	-	-	-	-	-	-
EDMA3CC2	-	-	-	-	-	-	-	-	-	-	-	-	-	-	-	-
CorePac0_CFG	Y	Y	Y	Y	Y	Y	Y	Y	Y	Y	Y	Y	Y	Y	Y	Y
CorePac1_CFG	Y	Y	Y	Y	Y	Y	Y	Y	Y	Y	Y	Y	Y	Y	Y	Y
CorePac2_CFG	Y	Y	Y	Y	Y	Y	Y	Y	Y	Y	Y	Y	Y	Y	Y	Y
CorePac3_CFG	Y	Y	Y	Y	Y	Y	Y	Y	Y	Y	Y	Y	Y	Y	Y	Y
CorePac4_CFG	Y	Y	Y	Y	Y	Y	Y	Y	Y	Y	Y	Y	Y	Y	Y	Y
CorePac5_CFG	Y	Y	Y	Y	Y	Y	Y	Y	Y	Y	Y	Y	Y	Y	Y	Y
CorePac6_CFG	Y	Y	Y	Y	Y	Y	Y	Y	Y	Y	Y	Y	Y	Y	Y	Y
CorePac7_CFG	Y	Y	Y	Y	Y	Y	Y	Y	Y	Y	Y	Y	Y	Y	Y	Y

End of Table 4-3

Copyright 2014 Texas Instruments Incorporated

4.3 Bus Priorities

The priority level of all master peripheral traffic is defined at the TeraNet boundary. User programmable priority registers allow software configuration of the data traffic through the TeraNet. Note that a lower number means higher priority - PRI = 000b = urgent, PRI = 111b = low.

All other masters provide their priority directly and do not need a default priority setting. Examples include the CorePacs, whose priorities are set through software in the UMC control registers. All the packet-DMA-based peripherals also have internal registers to define the priority level of their initiated transactions.

The QM Packet DMA master port is one master port that does not have priority allocation register inside the IP. The priority level for transaction from this master port is described by QM_PRIORITY bit field in CHIP_MISC_CTL register in section 3.3.22 .

For all other modules, see the respective User Guides in "Related Documentation from Texas Instruments" on page 72 for programmable priority registers.

5 C66x CorePac

The C66x CorePac consists of several components:

- The C66x DSP and associated C66x CorePac core
- Level-one and level-two memories (L1P, L1D, L2)
- Data Trace Formatter (DTF)
- Embedded Trace Buffer (ETB)
- Interrupt Controller
- Power-down controller
- External Memory Controller
- Extended Memory Controller
- A dedicated power/sleep controller (LPSC)

The C66x CorePac also provides support for memory protection, bandwidth management (for resources local to the C66x CorePac) and address extension. Figure 5-1 shows a block diagram of the C66x CorePac.

Figure 5-1 C66x CorePac Block Diagram

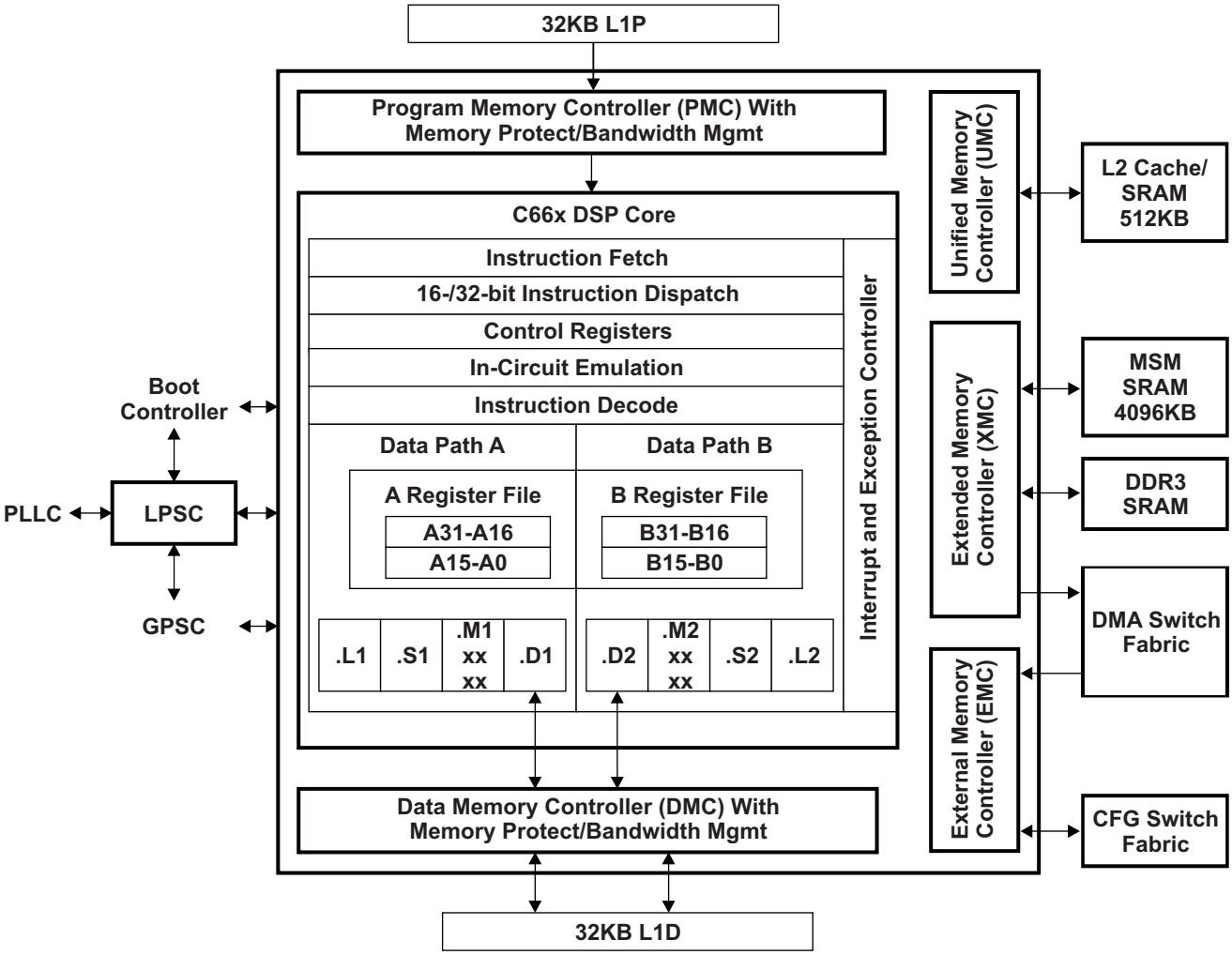

For more detailed information on the TMS320C66x CorePac on the C6678 device, see the *C66x DSP CorePac User Guide* in "Related Documentation from Texas Instruments" on page 72.

Copyright 2014 Texas Instruments Incorporated

5.1 Memory Architecture

Each C66x CorePac of the TMS320C6678 device contains a 512KB level-2 memory (L2), a 32KB level-1 program memory (L1P), and a 32KB level-1 data memory (L1D). The device also contain a 4096KB multicore shared memory (MSM). All memory on the C6678 has a unique location in the memory map (see Table 2-2 "Memory Map Summary" on page 17.

After device reset, L1P and L1D cache are configured as all cache, by default. The L1P and L1D cache can be reconfigured via software through the L1PMODE field of the L1P Configuration Register (L1PCFG) and the L1DMODE field of the L1D Configuration Register (L1DCFG) of the C66x CorePac. L1D is a two-way set-associative cache, while L1P is a direct-mapped cache.

The on-chip bootloader changes the reset configuration for L1P and L1D. For more information, see the *DSP Bootloader for KeyStone Devices User Guide* in "Related Documentation from Texas Instruments" on page 72.

For more information on the operation L1 and L2 caches, see the *C66x DSP Cache User Guide* in "Related Documentation from Texas Instruments" on page 72.

5.1.1 L1P Memory

The L1P memory configuration for the C6678 device is as follows:

- 32K bytes with no wait states

Figure 5-2 shows the available SRAM/cache configurations for L1P.

Figure 5-2 L1P Memory Configurations

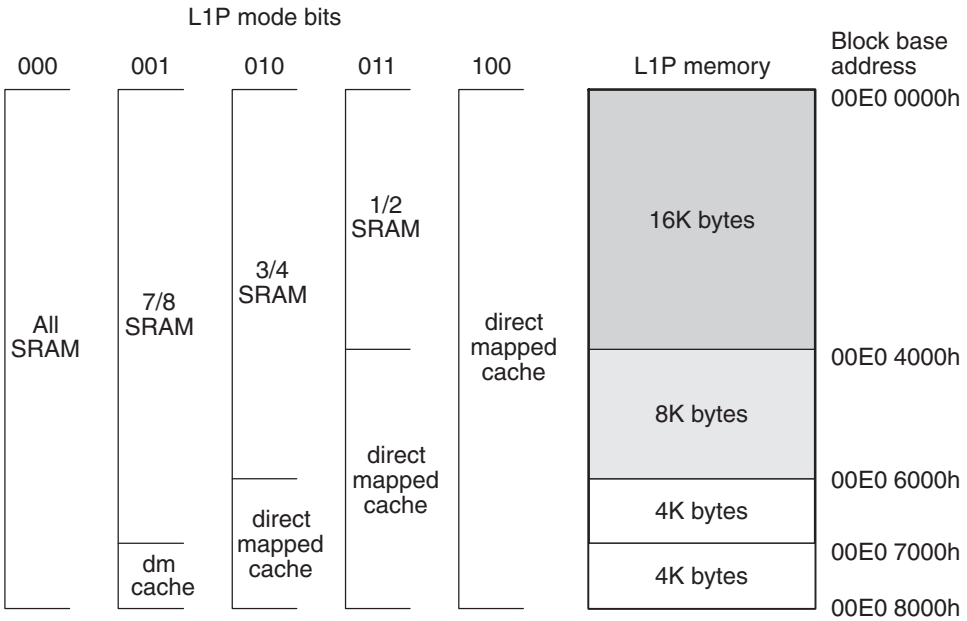

5.1.2 L1D Memory

The L1D memory configuration for the C6678 device is as follows:

- 32K bytes with no wait states

Figure 5-3 shows the available SRAM/cache configurations for L1D.

Figure 5-3 L1D Memory Configurations

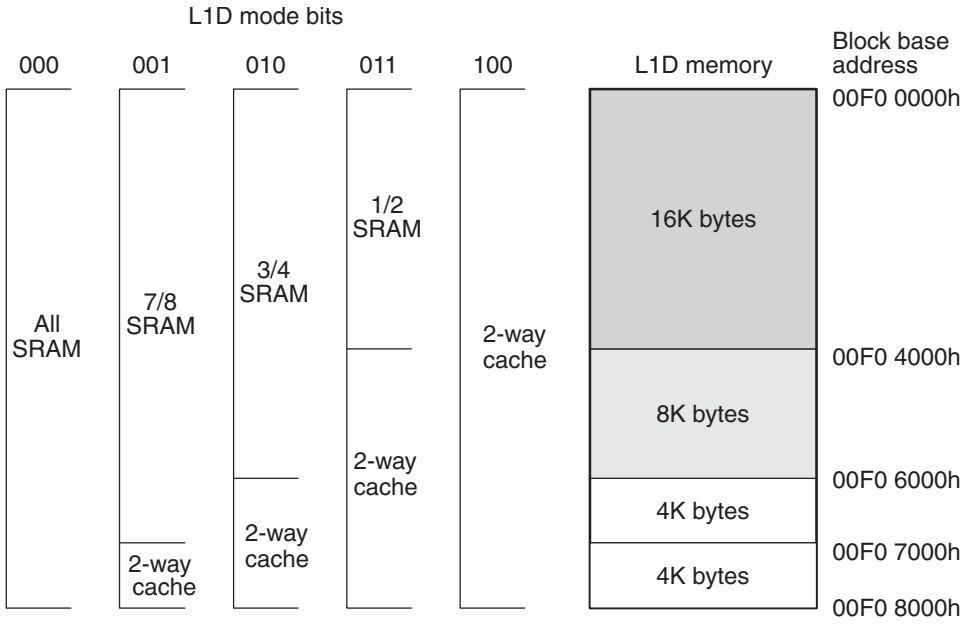

Copyright 2014 Texas Instruments Incorporated

5.1.3 L2 Memory

The L2 memory configuration for the C6678 device is as follows:

- Total memory size is 4096KB
- Each core contains 512KB of memory
- Local starting address for each core is 0080 0000h

L2 memory can be configured as all SRAM, all 4-way set-associative cache, or a mix of the two. The amount of L2 memory that is configured as cache is controlled through the L2MODE field of the L2 Configuration Register (L2CFG) of the C66x CorePac. Figure 5-4 shows the available SRAM/cache configurations for L2. By default, L2 is configured as all SRAM after device reset.

Figure 5-4 L2 Memory Configurations

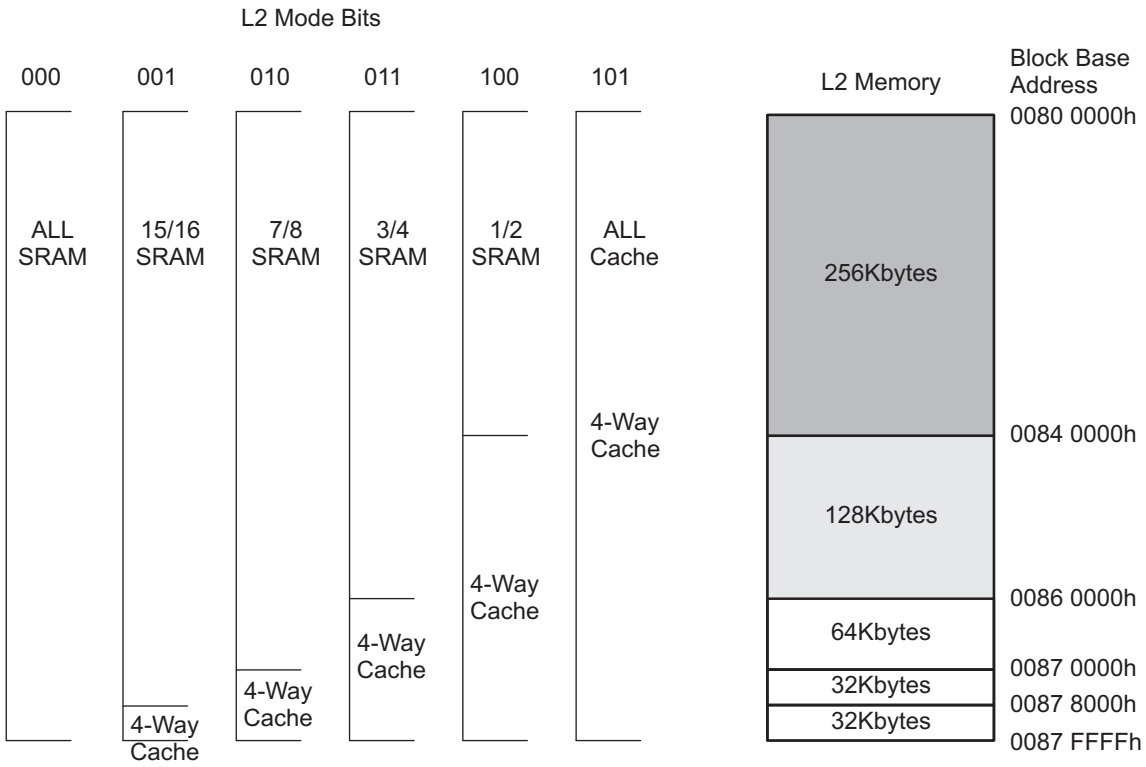

Global addresses are accessible to all masters in the system. In addition, local memory can be accessed directly by the associated processor through aliased addresses, where the eight MSBs are masked to 0. The aliasing is handled within the C66x CorePac and allows for common code to be run unmodified on multiple cores. For example, address location 0x10800000 is the global base address for C66x CorePac Core 0's L2 memory. C66x CorePac Core 0 can access this location by either using 0x10800000 or 0x00800000. Any other master on the device must use 0x10800000 only. Conversely, 0x00800000 can by used by any of the cores as their own L2 base addresses.

For C66x CorePac Core 0, as mentioned, this is equivalent to 0x10800000, for C66x CorePac Core 1 this is equivalent to 0x11800000, and for C66x CorePac Core 2 this is equivalent to 0x12800000. Local addresses should be used only for shared code or data, allowing a single image to be included in memory. Any code/data targeted to a specific core, or a memory region allocated during run-time by a particular core should always use the global address only.

Copyright 2014 Texas Instruments Incorporated

5.1.4 MSM SRAM

The MSM SRAM configuration for the C6678 device is as follows:

- Memory size is 4096KB
- The MSM SRAM can be configured as shared L2 and/or shared L3 memory
- Allows extension of external addresses from 2GB to up to 8GB
- Has built in memory protection features

The MSM SRAM is always configured as all SRAM. When configured as a shared L2, its contents can be cached in L1P and L1D. When configured in shared L3 mode, it's contents can be cached in L2 also. For more details on external memory address extension and memory protection features, see the *Multicore Shared Memory Controller (MSMC) for KeyStone Devices User Guide* in "Related Documentation from Texas Instruments" on page 72.

5.1.5 L3 Memory

The L3 ROM on the device is 128KB. The ROM contains software used to boot the device. There is no requirement to block accesses from this portion to the ROM.

Copyright 2014 Texas Instruments Incorporated

5.2 Memory Protection

Memory protection allows an operating system to define who or what is authorized to access L1D, L1P, and L2 memory. To accomplish this, the L1D, L1P, and L2 memories are divided into pages. There are 16 pages of L1P (2KB each), 16 pages of L1D (2KB each), and 32 pages of L2 (16KB each). The L1D, L1P, and L2 memory controllers in the C66x CorePac are equipped with a set of registers that specify the permissions for each memory page.

Each page may be assigned with fully orthogonal user and supervisor read, write, and execute permissions. In addition, a page may be marked as either (or both) locally accessible or globally accessible. A local access is a direct DSP access to L1D, L1P, and L2, while a global access is initiated by a DMA (either IDMA or the EDMA3) or by other system masters. Note that EDMA or IDMA transfers programmed by the DSP count as global accesses. On a secure device, pages can be restricted to secure access only (default) or opened up for public, non-secure access.

The DSP and each of the system masters on the device are all assigned a privilege ID. It is possible to specify whether memory pages are locally or globally accessible.

The AIDx and LOCAL bits of the memory protection page attribute registers specify the memory page protection scheme, see Table 5-1.

Table 5-1 Available Memory Page Protection Schemes

AIDx Bit	Local Bit	Description
0	0	No access to memory page is permitted.
0	1	Only direct access by DSP is permitted.
1	0	Only accesses by system masters and IDMA are permitted (includes EDMA and IDMA accesses initiated by the DSP).
1	1	All accesses permitted.
End of Table 5-1		

Faults are handled by software in an interrupt (or an exception, programmable within the C66x CorePac interrupt controller) service routine. A DSP or DMA access to a page without the proper permissions will:

- Block the access — reads return 0, writes are ignored
- Capture the initiator in a status register — ID, address, and access type are stored
- Signal event to DSP interrupt controller

The software is responsible for taking corrective action to respond to the event and resetting the error status in the memory controller. For more information on memory protection for L1D, L1P, and L2, see the *C66x DSP CorePac User Guide* in "Related Documentation from Texas Instruments" on page 72.

5.3 Bandwidth Management

When multiple requestors contend for a single C66x CorePac resource, the conflict is resolved by granting access to the highest priority requestor. The following four resources are managed by the Bandwidth Management control hardware:

- Level 1 Program (L1P) SRAM/Cache
- Level 1 Data (L1D) SRAM/Cache
- Level 2 (L2) SRAM/Cache
- Memory-mapped registers configuration bus

The priority level for operations initiated within the C66x CorePac are declared through registers in the C66x CorePac. These operations are:

- DSP-initiated transfers
- User-programmed cache coherency operations
- IDMA-initiated transfers

The priority level for operations initiated outside the C66x CorePac by system peripherals is declared through the Priority Allocation Register (PRI_ALLOC), see section 4.3 "Bus Priorities" on page 107 for more details. System peripherals with no fields in the PRI_ALLOC have their own registers to program their priorities.

More information on the bandwidth management features of the C66x CorePac can be found in the *C66x DSP CorePac User Guide* in "Related Documentation from Texas Instruments" on page 72.

5.4 Power-Down Control

The C66x CorePac supports the ability to power down various parts of the C66x CorePac. The power down controller (PDC) of the C66x CorePac can be used to power down L1P, the cache control hardware, the DSP, and the entire C66x CorePac. These power-down features can be used to design systems for lower overall system power requirements.



Note—The C6678 does not support power-down modes for the L2 memory at this time.

More information on the power-down features of the C66x CorePac can be found in the *C66x DSP CorePac User Guide* in "Related Documentation from Texas Instruments" on page 72.

Copyright 2014 Texas Instruments Incorporated

5.5 C66x CorePac Revision

The version and revision of the C66x CorePac can be read from the CorePac Revision ID Register (MM_REVID) located at address 0181 2000h. The MM_REVID register is shown in Figure 5-5 and described in Table 5-2. The C66x CorePac revision is dependant on the silicon revision being used.

Figure 5-5 CorePac Revision ID Register (MM_REVID) Address - 0181 2000h

31	16	15	0
VERSION		REVISION	
R-n		R-n	

Legend: R = Read; -*n* = value after reset

Table 5-2 CorePac Revision ID Register (MM_REVID) Field Descriptions

Bit	Field	Description
31-16	VERSION	Version of the C66x CorePac implemented on the device.
15-0	REVISION	Revision of the C66x CorePac version implemented on the device.
End of Table 5-2		

5.6 C66x CorePac Register Descriptions

See the *C66x DSP CorePac User Guide* in "Related Documentation from Texas Instruments" on page 72 for register offsets and definitions.

Copyright 2014 Texas Instruments Incorporated

6 Device Operating Conditions

6.1 Absolute Maximum Ratings

Table 6-1 Absolute Maximum Ratings (1)
Over Operating Case Temperature Range (Unless Otherwise Noted)

Supply voltage range (2):	CVDD	-0.3 V to 1.3 V
	CVDD1	-0.3 V to 1.3 V
	DVDD15	-0.3 V to 2.45 V
	DVDD18	-0.3 V to 2.45 V
	VREFSSTL	0.49 × DVDD15 to 0.51 × DVDD15
	VDDT1, VDDT2	-0.3 V to 1.3 V
	VDDR1, VDDR2, VDDR3, VDDR4	-0.3 V to 2.45 V
	AVDDA1, AVDDA2, AVDDA3	-0.3 V to 2.45 V
	VSS Ground	0 V
Input voltage (V_I) range:	LVCMOS (1.8V)	-0.3 V to DVDD18+0.3 V
	DDR3	-0.3 V to 2.45 V
	I^2C	-0.3 V to 2.45 V
	LVDS	-0.3 V to DVDD18+0.3 V
	LJCB	-0.3 V to 1.3 V
	SerDes	-0.3 V to CVDD1+0.3 V
Output voltage (V_O) range:	LVCMOS (1.8V)	-0.3 V to DVDD18+0.3 V
	DDR3	-0.3 V to 2.45 V
	I^2C	-0.3 V to 2.45 V
	SerDes	-0.3 V to CVDD1+0.3 V
Operating case temperature range, T_C:	Commercial	0°C to 85°C
	Extended	-40°C to 100°C
ESD stress voltage, V_{ESD} (3):	HBM (human body model) (4)	±1000 V
	CDM (charged device model) (5)	±250 V
Overshoot/undershoot (6)	LVCMOS (1.8V)	20% Overshoot/Undershoot for 20% of Signal Duty Cycle
	DDR3	
	I^2C	
Storage temperature range, T_{stg}:		-65°C to 150°C
End of Table 6-1		

1 Stresses beyond those listed under "absolute maximum ratings" may cause permanent damage to the device. These are stress ratings only, and functional operation of the device at these or any other conditions beyond those indicated under "recommended operating conditions" is not implied. Exposure to absolute-maximum-rated conditions for extended periods may affect device reliability.

2 All voltage values are with respect to V_{SS}.

3 Electrostatic discharge (ESD) to measure device sensitivity/immunity to damage caused by electrostatic discharges into the device.

4 Level listed above is the passing level per ANSI/ESDA/JEDEC JS-001-2010. JEDEC document JEP155 states that 500 V HBM allows safe manufacturing with a standard ESD control process, and manufacturing with less than 500 V HBM is possible if necessary precautions are taken. Pins listed as 1000 V may actually have higher performance.

5 Level listed above is the passing level per EIA-JEDEC JESD22-C101E. JEDEC document JEP157 states that 250 V CDM allows safe manufacturing with a standard ESD control process. Pins listed as 250 V may actually have higher performance.

6 Overshoot/Undershoot percentage relative to I/O operating values - for example the maximum overshoot value for 1.8-V LVCMOS signals is DVDD18 + 0.20 × DVDD18 and maximum undershoot value would be V_{SS} - 0.20 × DVDD18

Copyright 2014 Texas Instruments Incorporated

6.2 Recommended Operating Conditions

Table 6-2 Recommended Operating Conditions (1) (2)

			Min	Nom	Max	Unit
CVDD	SR Core Supply	Initial Startup	VINITnom × 0.95	1.1or 1.15 (3)	VINITnom × 1.05	V
		1000MHz - Device	SRVnom (4) × 0.95	0.85-1.1	SRVnom × 1.05	
		1250MHz - Device	SRVnom × 0.95	0.9-1.1	SRVnom × 1.05	
		1400MHz - Device	SRVnom × 0.95	0.95-1.15	SRVnom × 1.05	
CVDD1	Core supply voltage for memory array		0.95	1	1.05	V
DVDD18	1.8-V supply I/O voltage		1.71	1.8	1.89	V
DVDD15	1.5-V supply I/O voltage		1.425	1.5	1.575	V
VREFSSTL	DDR3 reference voltage		0.49 × DVDD15	0.5 × DVDD15	0.51 × DVDD15	V
V_{DDRx} (5)	SerDes regulator supply		1.425	1.5	1.575	V
V_{DDAx}	PLL analog supply		1.71	1.8	1.89	V
V_{DDTx}	SerDes termination supply		0.95	1	1.05	V
V_{SS}	Ground		0	0	0	V
V_{IH}	High-level input voltage	LVCMOS (1.8 V)	0.65 × DVDD18			V
		I^2C	0.7 × DVDD18			V
		DDR3 EMIF	VREFSSTL + 0.1			V
V_{IL}	Low-level input voltage	LVCMOS (1.8 V)			0.35 × DVDD18	V
		DDR3 EMIF	-0.3		VREFSSTL - 0.1	V
		I^2C			0.3 × DVDD18	V
T_C	Operating case temperature	Commercial	0		85	°C
		Extended	-40		100	°C

End of Table 6-2

1 All differential clock inputs comply with the LVDS Electrical Specification, IEEE 1596.3-1996 and all SerDes I/Os comply with the XAUI Electrical Specification, IEEE 802.3ae-2002.

2 All SerDes I/Os comply with the XAUI Electrical Specification, IEEE 802.3ae-2002.

3 The initial CVDD voltage at power on must be 1.1 V nominal (for 1000-MHz and 1250-MHz devices) or 1.15 V nominal (for 1400-MHz device) and it must transition to the VID set value immediately after being presented on the VCNTL pins. This is required to maintain full-power functionality and reliability targets specified by TI.

4 SRVnom refers to the unique SmartReflex core supply voltage set from the factory for each individual device.

5 Where x = 1, 2, 3, 4... to indicate all supplies of the same kind.

Copyright 2014 Texas Instruments Incorporated

6.3 Electrical Characteristics

Table 6-3 Electrical Characteristics
Over Recommended Ranges of Supply Voltage and Operating Case Temperature (Unless Otherwise Noted)

Parameter			Test Conditions [1]	Min	Typ	Max	Unit
V_{OH}	High-level output voltage	LVCMOS (1.8 V)	$I_O = I_{OH}$	DVDD18 - 0.45			V
		DDR3		DVDD15 - 0.4			
		I^2C [2]					
V_{OL}	Low-level output voltage	LVCMOS (1.8 V)	$I_O = I_{OL}$			0.45	V
		DDR3				0.4	
		I^2C	I_O = 3 mA, pulled up to 1.8 V			0.4	
I_I [3]	Input current [DC]	LVCMOS (1.8 V)	No IPD/IPU	-5		5	µA
			Internal pullup	50	100	170 [4]	
			Internal pulldown	-170	-100	-50	
		I^2C	0.1 × DVDD18 V < V_I < 0.9 × DVDD18 V	-10		10	
I_{OH}	High-level output current [DC]	LVCMOS (1.8 V)				-6	mA
		DDR3				-8	
		I^2C [5]					
I_{OL}	Low-level output current [DC]	LVCMOS (1.8 V)				6	mA
		DDR3				8	
		I^2C				3	
I_{OZ} [6]	Off-state output current [DC]	LVCMOS (1.8 V)		-2		2	µA
		DDR3		-2		2	
		I^2C		-2		2	
End of Table 6-3							

1 For test conditions shown as MIN, MAX, or TYP, use the appropriate value specified in the recommended operating conditions table.
2 I^2C uses open collector IOs and does not have a V_{OH} Minimum.
3 I_I applies to input-only pins and bidirectional pins. For input-only pins, I_I indicates the input leakage current. For bidirectional pins, I_I includes input leakage current and off-state (Hi-Z) output leakage current.
4 For $\overline{\text{RESETSTAT}}$, max DC input current is 300 µA.
5 I^2C uses open collector IOs and does not have an I_{OH} Maximum.
6 I_{OZ} applies to output-only pins, indicating off-state (Hi-Z) output leakage current.

Copyright 2014 Texas Instruments Incorporated

6.4 Power Supply to Peripheral I/O Mapping

Table 6-4 Power Supply to Peripheral I/O Mapping (1) (2)
Over Recommended Ranges of Supply Voltage and Operating Case Temperature (Unless Otherwise Noted)

Power Supply		I/O Buffer Type	Associated Peripheral
CVDD	Supply Core Voltage	LJCB	CORECLK(P|N) PLL input buffers
			SRIOSGMIICLK(P|N) SerDes PLL input buffers
			DDRCLK(P|N) PLL input buffers
			PCIECLK(P|N) SerDes PLL input buffers
			MCMCLK(P|N) SerDes PLL input buffers
			PASSCLK(P|N) PLL input buffers
DVDD15	1.5-V supply I/O voltage	DDR3 (1.5 V)	All DDR3 memory controller peripheral I/O buffers
DVDD18	1.8-V supply I/O voltage	LVCMOS (1.8 V)	All GPIO peripheral I/O buffers
			All JTAG and EMU peripheral I/O buffers
			All Timer peripheral I/O buffers
			All SPI peripheral I/O buffers
			All RESETs, NMI, Control peripheral I/O buffers
			All Hyperlink sideband peripheral I/O buffers
			All MDIO peripheral I/O buffers
			All UART peripheral I/O buffers
			All TSIP0 and TSIP1 peripheral I/O buffers
			All EMIF16 peripheral I/O buffers
		Open-drain (1.8V)	All I^2C peripheral I/O buffers
			All SmartReflex peripheral I/O buffers
VDDT1	Hyperlink SerDes termination and analog front-end supply	SerDes/CML	Hyperlink SerDes CML IO buffers
VDDT2	SRIO/SGMII/PCIE SerDes termination and analog front-end supply	SerDes/CML	SRIO/SGMII/PCIE SerDes CML IO buffers
End of Table 6-4			

1 Note that this table does not attempt to describe all functions of all power supply terminals, but only those whose purpose it is to power peripheral I/O buffers and clock input buffers.

2 See the *Hardware Design Guide for KeyStone I Devices* in "Related Documentation from Texas Instruments" on page 72 for more information about individual peripheral I/O.

7 Peripheral Information and Electrical Specifications

This chapter covers the various peripherals on the TMS320C6678 DSP. Peripheral-specific information, timing diagrams, electrical specifications, and register memory maps are described in this chapter.

7.1 Parameter Information

This section describes the conditions used to capture the electrical data seen in this chapter.

7.1.1 Timing Parameters and Board Routing Analysis

The timing parameter values specified in this data manual do not include delays caused by board routings. As a good board design practice, such delays must always be taken into account. Timing values may be adjusted by increasing/decreasing such delays. TI recommends using the available I/O buffer information specification (IBIS) models to analyze the timing characteristics correctly. To properly use IBIS models to attain accurate timing analysis for a given system, see the *Using IBIS Models for Timing Analysis* application report in "Related Documentation from Texas Instruments" on page 72. If needed, external logic hardware such as buffers may be used to compensate any timing differences.

7.1.2 1.8-V LVCMOS Signal Transition Levels

All input and output timing parameters are referenced to VDD/2 for both 0 and 1 logic levels.

Figure 7-1 Input and Output Voltage Reference Levels for AC Timing Measurements

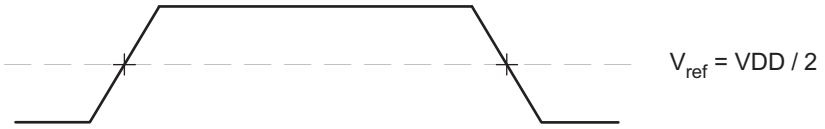

All rise and fall transition timing parameters are referenced to V_{IL} MAX and V_{IH} MIN for input clocks, V_{OL} MAX and V_{OH} MIN for output clocks.

Figure 7-2 Rise and Fall Transition Time Voltage Reference Levels

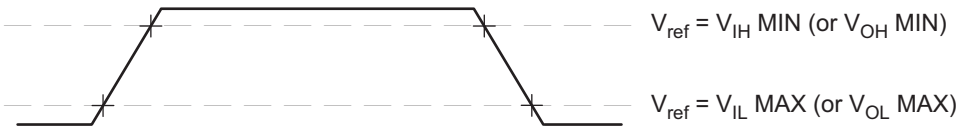

7.2 Recommended Clock and Control Signal Transition Behavior

All clocks and control signals ***must*** transition between V_{IH} and V_{IL} (or between V_{IL} and V_{IH}) in a monotonic manner.

Copyright 2014 Texas Instruments Incorporated

7.3 Power Supplies

The following sections describe the proper power-supply sequencing and timing needed to properly power on the C6678. The various power supply rails and their primary function is listed in Table 7-1.

Table 7-1 Power Supply Rails on the TMS320C6678

Name	Primary Function	Voltage	Notes
CVDD	SmartReflex core supply voltage	0.9 V to 1.1 V or 0.95 V to 1.15 V (1)	Includes core voltage for DDR3 module
CVDD1	Core supply voltage for memory array	1.0 V	Fixed supply at 1.0 V
VDDT1	HyperLink SerDes termination supply	1.0 V	Filtered version of CVDD1. Special considerations for noise. Filter is not needed if HyperLink is not in use.
VDDT2	SGMII/SRIO/PCIE SerDes termination supply	1.0 V	Filtered version of CVDD1. Special considerations for noise. Filter is not needed if SGMII/SRIO/PCIE is not in use.
DVDD15	1.5-V DDR3 IO supply	1.5 V	Fixed supply at 1.5V
VDDR1	HyperLink SerDes regulator supply	1.5 V	Filtered version of DVDD15. Special considerations for noise. Filter is not needed if HyperLink is not in use.
VDDR2	PCIE SerDes regulator supply	1.5 V	Filtered version of DVDD15. Special considerations for noise. Filter is not needed if PCIe is not in use.
VDDR3	SGMII SerDes regulator supply	1.5 V	Filtered version of DVDD15. Special considerations for noise. Filter is not needed if SGMII is not in use.
VDDR4	SRIO SerDes regulator supply	1.5 V	Filtered version of DVDD15. Special considerations for noise. Filter is not needed if SRIO is not in use.
DVDD18	1.8-V IO supply	1.8V	Fixed supply at 1.8V
AVDDA1	Main PLL supply	1.8 V	Filtered version of DVDD18. Special considerations for noise.
AVDDA2	DDR3 PLL supply	1.8 V	Filtered version of DVDD18. Special considerations for noise.
AVDDA3	PASS PLL supply	1.8 V	Filtered version of DVDD18. Special considerations for noise.
VREFSSTL	0.75-V DDR3 reference voltage	0.75 V	Should track the 1.5-V supply. Use 1.5 V as source.
VSS	Ground	GND	Ground
End of Table 7-1			

1 CVDD voltage range will be 0.9 V to 1.1 V for 1000-MHz and 1250-MHz devices and 0.95 V to 1.15 V for 1400-MHz device.

Copyright 2014 Texas Instruments Incorporated

7.3.1 Power-Supply Sequencing

This section defines the requirements for a power up sequencing from a power-on reset condition. There are two acceptable power sequences for the device. The first sequence stipulates the core voltages starting before the IO voltages as shown below.

1. CVDD
2. CVDD1, VDDT1-2
3. DVDD18, AVDD1, AVDD2
4. DVDD15, VDDR1-4

The second sequence provides compatibility with other TI processors with the IO voltage starting before the core voltages as shown below.

1. DVDD18, AVDD1, AVDD2
2. CVDD
3. CVDD1, VDDT1-2
4. DVDD15, VDDR1-4

The clock input buffers for CORECLK, DDRCLK, PASSCLK, SRIOSGMIICLK, PCIECLK and MCMCLK use CVDD as a supply voltage. These clock inputs are not failsafe and must be held in a high-impedance state until CVDD is at a valid voltage level. Driving these clock inputs high before CVDD is valid could cause damage to the device. Once CVDD is valid it is acceptable that the P and N legs of these CLKs may be held in a static state (either high and low or low and high) until a valid clock frequency is needed at that input. To avoid internal oscillation the clock inputs should be removed from the high impedance state shortly after CVDD is present.

If a clock input is not used it must be held in a static state. To accomplish this the N leg should be pulled to ground through a 1K ohm resistor. The P leg should be tied to CVDD to ensure it won't have any voltage present until CVDD is active. Connections to the IO cells powered by DVDD18 and DVDD15 are not failsafe and should not be driven high before these voltages are active. Driving these IO cells high before DVDD18 or DVDD15 are valid could cause damage to the device.

The device initialization is broken into two phases. The first phase consists of the time period from the activation of the first power supply until the point at which all supplies are active and at a valid voltage level. Either of the sequencing scenarios described above can be implemented during this phase. The figures below show both the core-before-IO voltage sequence and the IO-before-core voltage sequence. $\overline{\text{POR}}$ must be held low for the entire power stabilization phase.

This is followed by the device initialization phase. The rising edge of $\overline{\text{POR}}$ followed by the rising edge of $\overline{\text{RESETFULL}}$ will trigger the end of the initialization phase but both must be inactive for the initialization to complete. $\overline{\text{POR}}$ must always go inactive before $\overline{\text{RESETFULL}}$ goes inactive as described below. REFCLK in the following section refers to the clock input that has been selected as the source for the main PLL and SYSCLK1 refers to the main PLL output that is used by the CorePac, see Figure 7-9 for more details.

Copyright 2014 Texas Instruments Incorporated

7.3.1.1 Core-Before-IO Power Sequencing

Figure 7-3 shows the power sequencing and reset control of TMS320C6678 for device initialization. $\overline{\text{POR}}$ may be removed after the power has been stable for the required 100 µsec. $\overline{\text{RESETFULL}}$ must be held low for a period after the rising edge of $\overline{\text{POR}}$ but may be held low for longer periods if necessary. The configuration bits shared with the GPIO pins will be latched on the rising edge of $\overline{\text{RESETFULL}}$ and must meet the setup and hold times specified. REFCLK must always be active before $\overline{\text{POR}}$ can be removed. Core-before-IO power sequencing is defined in Table 7-2.

Note—TI recommends a maximum of 100 ms between one power rail being valid, and the next power rail in the sequence starting to ramp. Each supply must ramp monotonically and must reach a stable valid level within 20ms.

Figure 7-3 Core Before IO Power Sequencing

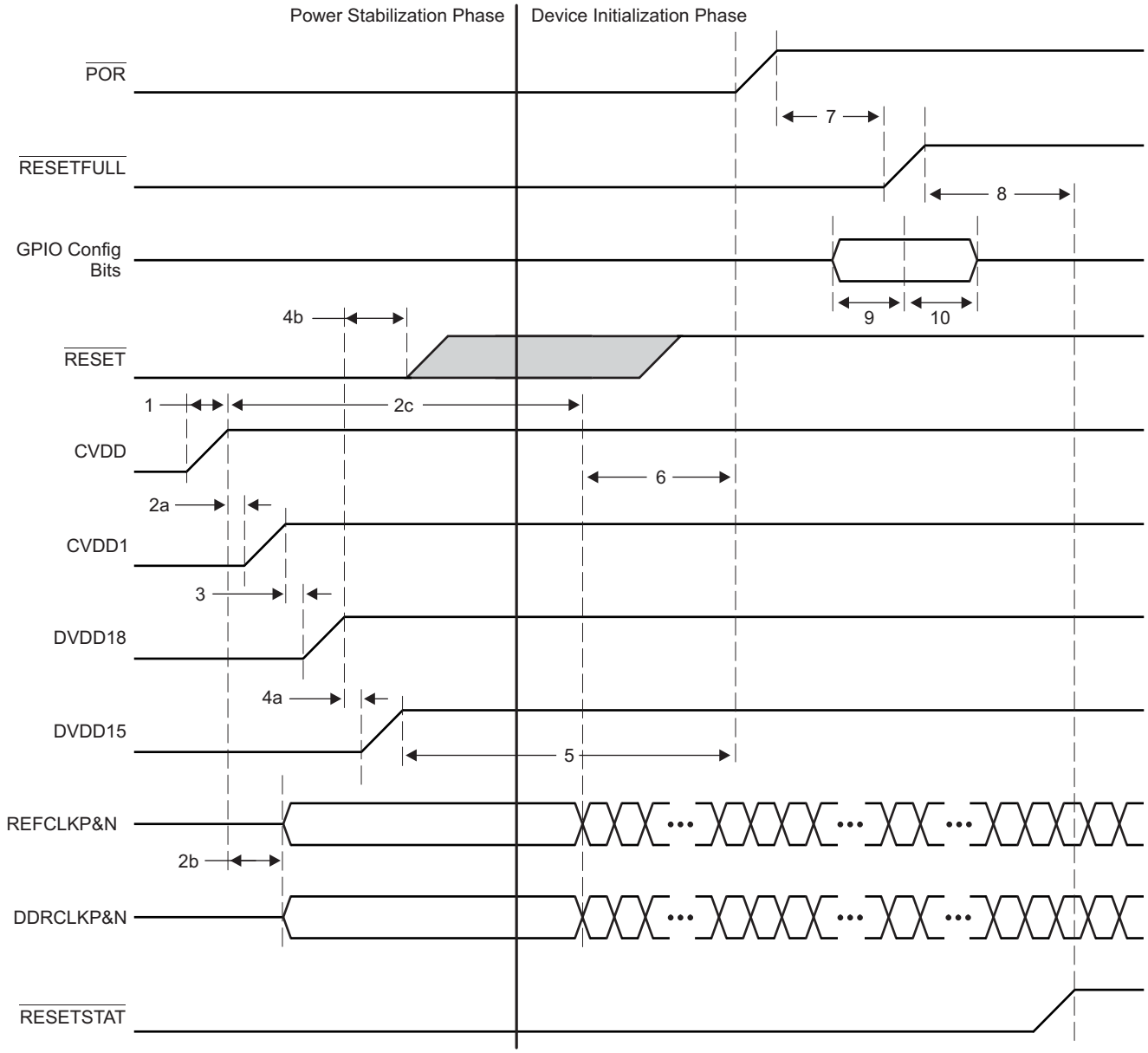

Table 7-2 Core Before IO Power Sequencing

Time	System State
1	**Begin Power Stabilization Phase** • CVDD (core AVS) ramps up. • $\overline{\text{POR}}$ must be held low through the power stabilization phase. Because $\overline{\text{POR}}$ is low, all the core logic that has async reset (created from $\overline{\text{POR}}$) is put into the reset state. • Once enabled, the power supply should ramp to its valid voltage level within 20 ms.
2a	• CVDD1 (core constant) ramps at the same time or shortly following CVDD. Although ramping CVDD1 and CVDD simultaneously is permitted, the voltage for CVDD1 ***must never exceed*** CVDD until after CVDD has reached a valid voltage. • The purpose of ramping up the core supplies close to each other is to reduce crowbar current. CVDD1 should trail CVDD as this will ensure that the WLs in the memories are turned off and there is no current through the memory bit cells. If, however, CVDD1 (core constant) ramps up before CVDD (core AVS), then the worst-case current could be on the order of twice the specified draw of CVDD1. • The maximum duration is 100 ms.
2b	• Once CVDD is valid, the clock drivers should be enabled. Although the clock inputs are not necessary at this time, they should either be driven with a valid clock or be held in a static state with one leg high and one leg low.
2c	• The DDRCLK and REFCLK may begin to toggle anytime between when CVDD is at a valid level and the setup time before $\overline{\text{POR}}$ goes high specified by t6.
3	• Filtered versions of 1.8 V can ramp simultaneously with DVDD18. • $\overline{\text{RESETSTAT}}$ is driven low once the DVDD18 supply is available. • All LVCMOS input and bidirectional pins must not be driven or pulled high until DVDD18 is present. Driving an input or bidirectional pin before DVDD18 is valid could cause damage to the device.
4a	• DVDD15 (1.5 V) supply is ramped up after DVDD18 is valid. Although ramping DVDD18 and DVDD15 simultaneously is permitted, the voltage for DVDD15 ***must never exceed*** DVDD18.
4b	• $\overline{\text{RESET}}$ may be driven high any time after DVDD18 is at a valid level. In a $\overline{\text{POR}}$-controlled boot, $\overline{\text{RESET}}$ must be high before $\overline{\text{POR}}$ is driven high.
5	• $\overline{\text{POR}}$ must continue to remain low for at least 100 µs after power has stabilized. End Power Stabilization Phase
6	• Device initialization requires 500 REFCLK periods after the Power Stabilization Phase. The maximum clock period is 33.33 nsec, so a delay of an additional 16 µs is required before a rising edge of $\overline{\text{POR}}$. The clock must be active during the entire 16 µs.
7	• $\overline{\text{RESETFULL}}$ must be held low for at least 24 transitions of the REFCLK after $\overline{\text{POR}}$ has stabilized at a high level.
8	• The rising edge of the $\overline{\text{RESETFULL}}$ will remove the reset to the efuse farm allowing the scan to begin. • Once device initialization and the efuse farm scan are complete, the $\overline{\text{RESETSTAT}}$ signal is driven high. This delay will be 10000 to 50000 clock cycles. End Device Initialization Phase
9	• GPIO configuration bits must be valid for at least 12 transitions of the REFCLK before the rising edge of $\overline{\text{RESETFULL}}$
10	• GPIO configuration bits must be held valid for at least 12 transitions of the REFCLK after the rising edge of $\overline{\text{RESETFULL}}$
End of Table 7-2	

Copyright 2014 Texas Instruments Incorporated

7.3.1.2 IO-Before-Core Power Sequencing

The timing diagram for IO-before-core power sequencing is shown in Figure 7-4 and defined in Table 7-3.

Note—TI recommends a maximum of 100 ms between one power rail being valid, and the next power rail in the sequence starting to ramp. Each supply must ramp monotonically and must reach a stable valid level within 20 ms.

Figure 7-4 IO Before Core Power Sequencing

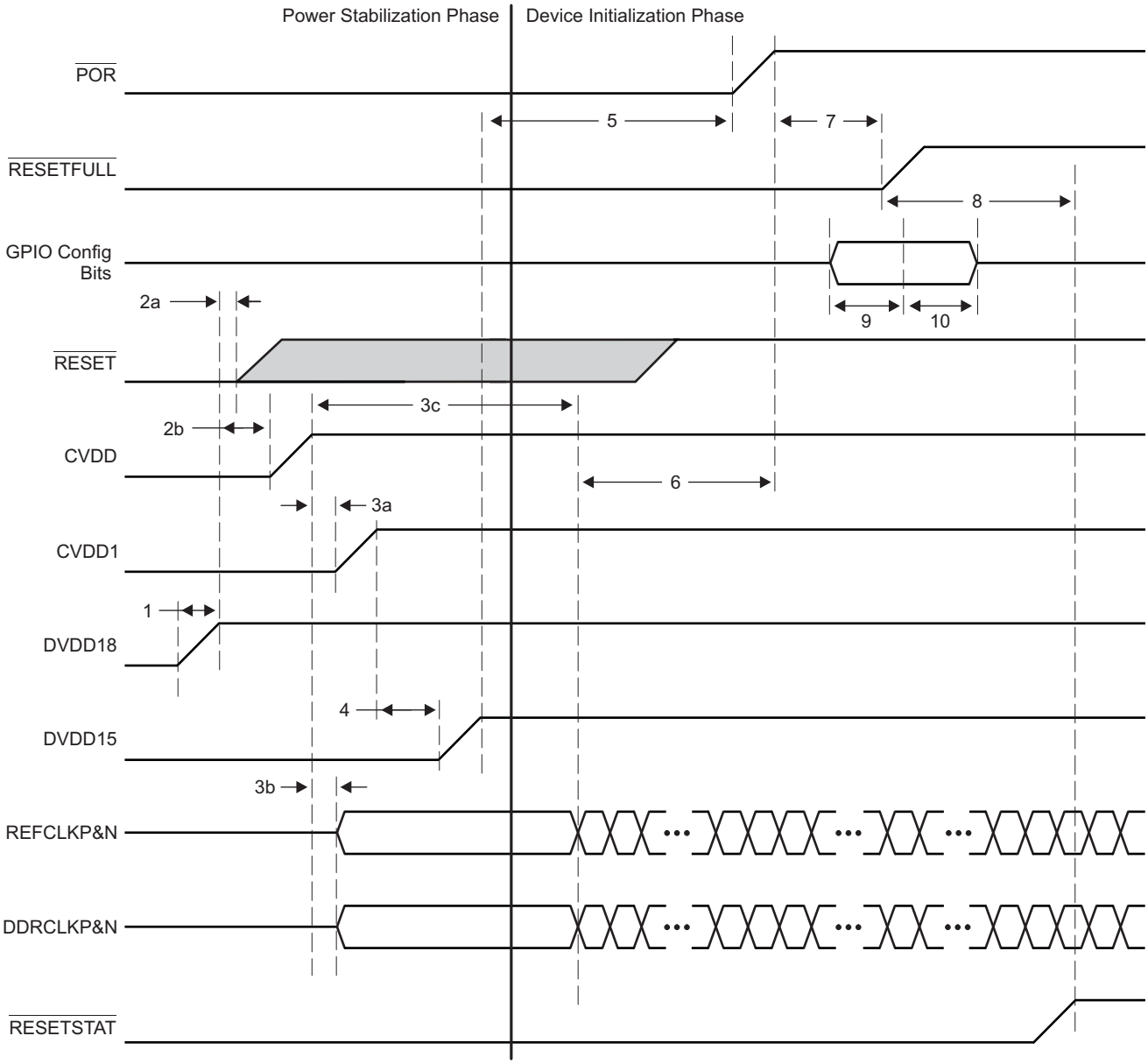

Table 7-3 IO Before Core Power Sequencing

Time	System State
1	**Begin Power Stabilization Phase** • Because $\overline{\text{POR}}$ is low, all the core logic having async reset (created from POR) are put into reset state once the core supply ramps. $\overline{\text{POR}}$ must remain low through Power Stabilization Phase. • Filtered versions of 1.8 V can ramp simultaneously with DVDD18. • $\overline{\text{RESETSTAT}}$ is driven low once the DVDD18 supply is available. • All input and bidirectional pins must not be driven or pulled high until DVDD18 is present. Driving an input or bidirectional pin before DVDD18 could cause damage to the device. • Once enabled, the power supply should ramp to its valid voltage level within 20 ms.
2a	• $\overline{\text{RESET}}$ may be driven high anytime after DVDD18 is at a valid level.
2b	• CVDD (core AVS) ramps up. • The maximum duration is 100 ms.
3a	• CVDD1 (core constant) ramps at the same time or following CVDD. Although ramping CVDD1 and CVDD simultaneously is permitted the voltage for CVDD1 ***must never exceed*** CVDD until after CVDD has reached a valid voltage. • The purpose of ramping up the core supplies close to each other is to reduce crowbar current. CVDD1 should trail CVDD as this will ensure that the WLs in the memories are turned off and there is no current through the memory bit cells. If, however, CVDD1 (core constant) ramps up before CVDD (core AVS), then the worst case current could be on the order of twice the specified draw of CVDD1.
3b	• Once CVDD is valid, the clock drivers should be enabled. Although the clock inputs are not necessary at this time, they should either be driven with a valid clock or held in a static state with one leg high and one leg low.
3c	• The DDRCLK and REFCLK may begin to toggle anytime between when CVDD is at a valid level and the setup time before $\overline{\text{POR}}$ goes high specified by t6.
4	• DVDD15 (1.5 V) supply is ramped up after CVDD1 is valid.
5	• $\overline{\text{POR}}$ must continue to remain low for at least 100 µs after power has stabilized. End Power Stabilization Phase
6	Begin Device Initialization • Device initialization requires 500 REFCLK periods after the Power Stabilization Phase. The maximum clock period is 33.33 nsec so a delay of an additional 16 µs is required before a rising edge of $\overline{\text{POR}}$. The clock must be active during the entire 16 µs. • $\overline{\text{POR}}$ must remain low.
7	• $\overline{\text{RESETFULL}}$ is held low for at least 24 transitions of the REFCLK after $\overline{\text{POR}}$ has stabilized at a high level. • The rising edge of the $\overline{\text{RESETFULL}}$ will remove the reset to the efuse farm allowing the scan to begin.
8	• Once device initialization and the efuse farm scan are complete, the $\overline{\text{RESETSTAT}}$ signal is driven high. This delay will be 10000 to 50000 clock cycles. End Device Initialization Phase
9	• GPIO configuration bits must be valid for at least 12 transitions of the REFCLK before the rising edge of $\overline{\text{RESETFULL}}$
10	• GPIO configuration bits must be held valid for at least 12 transitions of the REFCLK after the rising edge of $\overline{\text{RESETFULL}}$
End of Table 7-3	

7.3.1.3 Prolonged Resets

Holding the device in $\overline{\text{POR}}$, $\overline{\text{RESETFULL}}$, or $\overline{\text{RESET}}$ for long periods of time will affect the long term reliability of the part. The device should not be held in a reset for times exceeding one hour and should not be held in reset for more the 5% of the time during which power is applied. Exceeding these limits will cause a gradual reduction in the reliability of the part. This can be avoided by allowing the DSP to boot and then configuring it to enter a hibernation state soon after power is applied. This will satisfy the reset requirement while limiting the power consumption of the device.

Copyright 2014 Texas Instruments Incorporated

7.3.1.4 Clocking During Power Sequencing

Some of the clock inputs are required to be present for the device to initialize correctly, but behavior of many of the clocks is contingent on the state of the boot configuration pins. Table 7-4 describes the clock sequencing and the conditions that affect the clock operation. Note that all clock drivers should be in a high-impedance state until CVDD is at a valid level and that all clock inputs either be active or in a static state with one leg pulled low and the other connected to CVDD.

Table 7-4 Clock Sequencing

Clock	Condition	Sequencing
DDRCLK	None	Must be present 16 µsec before $\overline{\text{POR}}$ transitions high.
CORECLK	None	CORECLK used to clock the core PLL. It must be present 16 µsec before $\overline{\text{POR}}$ transitions high.
PASSCLK	PASSCLKSEL = 0	PASSCLK is not used and should be tied to a static state.
	PASSCLKSEL = 1	PASSCLK is used as a source for the PASS PLL. It must be present before the PASS PLL is removed from reset and programmed.
SRIOSGMIICLK	An SGMII port will be used.	SRIOSGMIICLK must be present 16 µsec before $\overline{\text{POR}}$ transitions high.
	SGMII will not be used. SRIO will be used as a boot device.	SRIOSGMIICLK must be present 16 µsec before $\overline{\text{POR}}$ transitions high.
	SGMII will not be used. SRIO will be used after boot.	SRIOSGMIICLK is used as a source to the SRIO SerDes PLL. It must be present before the SRIO is removed from reset and programmed.
	SGMII will not be used. SRIO will not be used.	SRIOSGMIICLK is not used and should be tied to a static state.
PCIECLK	PCIE will be used as a boot device.	PCIECLK must be present 16 µsec before $\overline{\text{POR}}$ transitions high.
	PCIE will be used after boot.	PCIECLK is used as a source to the PCIE SerDes PLL. It must be present before the PCIE is removed from reset and programmed.
	PCIE will not be used.	PCIECLK is not used and should be tied to a static state.
MCMCLK	HyperLink will be used as a boot device.	MCMCLK must be present 16usec before $\overline{\text{POR}}$ transitions high.
	HyperLink will be used after boot.	MCMCLK is used as a source to the MCM SerDes PLL. It must be present before the HyperLink is removed from reset and programmed.
	HyperLink will not be used.	MCMCLK is not used and should be tied to a static state.
End of Table 7-4		

7.3.2 Power-Down Sequence

The power down sequence is the exact reverse of the power-up sequence described above. The goal is to prevent a large amount of static current and to prevent overstress of the device. A power-good circuit that monitors all the supplies for the device should be used in all designs. If a catastrophic power supply failure occurs on any voltage rail, $\overline{\text{POR}}$ should transition to low to prevent over-current conditions that could possibly impact device reliability.

A system power monitoring solution is needed to shut down power to the board if a power supply fails. Long-term exposure to an environment in which one of the power supply voltages is no longer present will affect the reliability of the device. Holding the device in reset is not an acceptable solution because prolonged periods of time with an active reset can also affect long term reliability.

7.3.3 Power Supply Decoupling and Bulk Capacitors

In order to properly decouple the supply planes on the PCB from system noise, decoupling and bulk capacitors are required. Bulk capacitors are used to minimize the effects of low frequency current transients and decoupling or bypass capacitors are used to minimize higher frequency noise. For recommendations on selection of Power Supply Decoupling and Bulk capacitors see the *Hardware Design Guide for KeyStone I Devices* in "Related Documentation from Texas Instruments" on page 72.

7.3.4 SmartReflex

Increasing the device complexity increases its power consumption and with the smaller transistor structures responsible for higher achievable clock rates and increased performance, comes an inevitable penalty: increasing the leakage currents. Leakage currents are present in any active circuit, independent of clock rates and usage scenarios. This static power consumption is mainly determined by the transistor type and process technology used in the manufacture of the device. Higher clock rates also increase dynamic power — the power used when transistors switch. The dynamic power depends mostly on a specific usage scenario, clock rates, and I/O activity.

Texas Instruments' SmartReflex technology is used to decrease both static and dynamic power consumption while maintaining device performance.

SmartReflex in the TMS320C6678 is a feature that allows the core supply voltage to be optimized based on the process corner of the device. Voltage selection is done using four VCNTL pins that control the output voltage of the core voltage regulator supplying the device. Each TMS320C6678 device in an application requires a separate core voltage regulator. For information on the implementation of SmartReflex, see the *Power Consumption Summary for KeyStone C66x Devices* application report and the *Hardware Design Guide for KeyStone I Devices* in "Related Documentation from Texas Instruments" on page 72.

Table 7-5 SmartReflex 4-Pin VID Interface Switching Characteristics
(see Figure 7-5)

No.	Parameter		Min	Max	Unit
1	td(VCNTL[2:0]-VCNTL[3])	Delay Time - VCNTL[2:0] valid after VCNTL[3] low		300.00	ns
2	toh(VCNTL[3] -VCNTL[2:0])	Output Hold Time - VCNTL[2:0] valid after VCNTL[3] low	0.07	172020C (1)	ms
3	td(VCNTL[2:0]-VCNTL[3])	Delay Time - VCNTL[2:0] valid after VCNTL[3] high		300.00	ns
4	toh(VCNTL[3] -VCNTL[2:0])	Output Hold Time - VCNTL[2:0] valid after VCNTL[3] high	0.07	172020C	ms
5	VCNTL being valid to CVDD being switched to SmartReflex Voltage (2)			10	ms
End of Table 7-5					

1 C = 1/SYSCLK1 frequency in ms
2 SmartReflex voltage must be set before execution of application code

Figure 7-5 SmartReflex 4-Pin VID Interface Timing

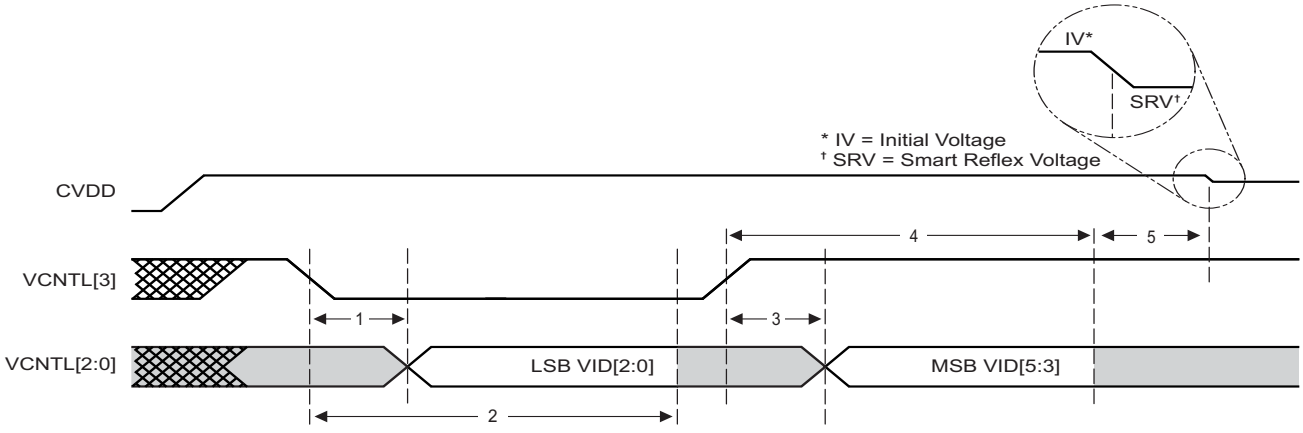

Note—The initial CVDD voltage (IV) at power on will be 1.1 V nominal (for 1000-MHz and 1250-MHz devices) or 1.15 V nominal (for 1400-MHz devices) and it must transition to the VID set value immediately after being presented on the VCNTL pins. This is required to maintain full power functionality and reliability targets specified by TI.

Copyright 2014 Texas Instruments Incorporated

7.4 Power Sleep Controller (PSC)

The Power Sleep Controller (PSC) controls overall device power by turning off unused power domains and gating off clocks to individual peripherals and modules. The PSC provides the user with an interface to control several important power and clock operations.

For information on the Power Sleep Controller, see the *Power Sleep Controller (PSC) for KeyStone Devices* User Guide in "Related Documentation from Texas Instruments" on page 72.

7.4.1 Power Domains

The device has several power domains that can be turned on for operation or off to minimize power dissipation. The global power/sleep controller (GPSC) is used to control the power gating of various power domains.

Table 7-6 shows the TMS320C6678 power domains.

Table 7-6 Power Domains

Domain	Block(s)	Note	Power Connection
0	Most peripheral logic	Cannot be disabled	Always on
1	Per-core TETB and System TETB	RAMs can be powered down	Software control
2	Packet Coprocessor	Logic can be powered down	Software control
3	PCIe	Logic can be powered down	Software control
4	SRIO	Logic can be powered down	Software control
5	HyperLink	Logic can be powered down	Software control
6	Reserved	Reserved	Reserved
7	MSMC RAM	MSMC RAM can be powered down	Software control
8	C66x CorePac0, L1/L2 RAMs	L2 RAMs can sleep	Software control via C66x core. For details, see the *C66x DSP CorePac User Guide*.
9	C66x CorePac1, L1/L2 RAMs	L2 RAMs can sleep	
10	C66x CorePac2, L1/L2 RAMs	L2 RAMs can sleep	
11	C66x CorePac3, L1/L2 RAMs	L2 RAMs can sleep	
12	C66x CorePac4, L1/L2 RAMs	L2 RAMs can sleep	
13	C66x CorePac5, L1/L2 RAMs	L2 RAMs can sleep	
14	C66x CorePac6, L1/L2 RAMs	L2 RAMs can sleep	
15	C66x CorePac7, L1/L2 RAMs	L2 RAMs can sleep	
End of Table 7-6			

7.4.2 Clock Domains

Cock gating to each logic block is managed by the local power/sleep controllers (LPSCs) of each module. For modules with a dedicated clock or multiple clocks, the LPSC communicates with the PLL controller to enable and disable that module's clock(s) at the source. For modules that share a clock with other modules, the LPSC controls the clock gating.

Table 7-7 shows the TMS320C6678 clock domains.

Table 7-7 Clock Domains

LPSC Number	Module(s)	Notes
0	Shared LPSC for all peripherals other than those listed in this table	Always on
1	SmartReflex	Always on
2	DDR3 EMIF	Always on
3	EMIF16 and SPI	Software control
4	TSIP	Software control
5	Debug Subsystem and Tracers	Software control
6	Per-core TETB and System TETB	Software control
7	Packet Accelerator	Software control
8	Ethernet SGMIIs	Software control
9	Security Accelerator	Software control
10	PCIe	Software control
11	SRIO	Software control
12	HyperLink	Software control
13	Reserved	Reserved
14	MSMC RAM	Software control
15	C66x CorePac0 and Timer 0	Always on
16	C66x CorePac1 and Timer 1	Always on
17	C66x CorePac2 and Timer 2	Always on
18	C66x CorePac3 and Timer 3	Always on
19	C66x CorePac4 and Timer 4	Always on
20	C66x CorePac5 and Timer 5	Always on
21	C66x CorePac6 and Timer 6	Always on
22	C66x CorePac7 and Timer 7	Always on
No LPSC	Bootcfg, PSC, and PLL controller	These modules do not use LPSC
End of Table 7-7		

Copyright 2014 Texas Instruments Incorporated

7.4.3 PSC Register Memory Map

Table 7-8 shows the PSC Register memory map.

Table 7-8 PSC Register Memory Map (Sheet 1 of 3)

Offset	Register	Description
0x000	PID	Peripheral Identification Register
0x004 - 0x010	Reserved	Reserved
0x014	VCNTLID	Voltage Control Identification Register (1)
0x018 - 0x11C	Reserved	Reserved
0x120	PTCMD	Power Domain Transition Command Register
0x124	Reserved	Reserved
0x128	PTSTAT	Power Domain Transition Status Register
0x12C - 0x1FC	Reserved	Reserved
0x200	PDSTAT0	Power Domain Status Register 0 (AlwaysOn)
0x204	PDSTAT1	Power Domain Status Register 1 (Per-core TETB and System TETB)
0x208	PDSTAT2	Power Domain Status Register 2 (Packet Coprocessor)
0x20C	PDSTAT3	Power Domain Status Register 3 (PCIe)
0x210	PDSTAT4	Power Domain Status Register 4 (SRIO)
0x214	PDSTAT5	Power Domain Status Register 5 (HyperLink)
0x218	PDSTAT6	Power Domain Status Register 6 (Reserved)
0x21C	PDSTAT7	Power Domain Status Register 7 (MSMC RAM)
0x220	PDSTAT8	Power Domain Status Register 8 (C66x CorePac0)
0x224	PDSTAT9	Power Domain Status Register 9 (C66x CorePac1)
0x228	PDSTAT10	Power Domain Status Register 10 (C66x CorePac2)
0x22C	PDSTAT11	Power Domain Status Register 11 (C66x CorePac3)
0x230	PDSTAT12	Power Domain Status Register 12 (C66x CorePac4)
0x234	PDSTAT13	Power Domain Status Register 13 (C66x CorePac5)
0x238	PDSTAT14	Power Domain Status Register 14 (C66x CorePac6)
0x23C	PDSTAT15	Power Domain Status Register 15 (C66x CorePac7)
0x240 - 0x2FC	Reserved	Reserved
0x300	PDCTL0	Power Domain Control Register 0 (AlwaysOn)
0x304	PDCTL1	Power Domain Control Register 1 (Per-core TETB and System TETB)
0x308	PDCTL2	Power Domain Control Register 2 (Packet Coprocessor)
0x30C	PDCTL3	Power Domain Control Register 3 (PCIe)
0x310	PDCTL4	Power Domain Control Register 4 (SRIO)
0x314	PDCTL5	Power Domain Control Register 5 (HyperLink)
0x318	PDCTL6	Power Domain Control Register 6 (Reserved)
0x31C	PDCTL7	Power Domain Control Register 7 (MSMC RAM)
0x320	PDCTL8	Power Domain Control Register 8 (C66x CorePac0)
0x324	PDCTL9	Power Domain Control Register 9 (C66x CorePac1)
0x328	PDCTL10	Power Domain Control Register 10 (C66x CorePac2)
0x32C	PDCTL11	Power Domain Control Register 11 (C66x CorePac3)
0x330	PDCTL12	Power Domain Control Register 12 (C66x CorePac4)
0x334	PDCTL13	Power Domain Control Register 13 (C66x CorePac5)
0x338	PDCTL14	Power Domain Control Register 14 (C66x CorePac6)
0x33C	PDCTL15	Power Domain Control Register 15 (C66x CorePac7)

Copyright 2014 Texas Instruments Incorporated

Table 7-8 PSC Register Memory Map (Sheet 2 of 3)

Offset	Register	Description
0x340 - 0x7FC	Reserved	Reserved
0x800	MDSTAT0	Module Status Register 0 (Never Gated)
0x804	MDSTAT1	Module Status Register 1 (SmartReflex)
0x808	MDSTAT2	Module Status Register 2 (DDR3 EMIF)
0x80C	MDSTAT3	Module Status Register 3 (EMIF16 and SPI)
0x810	MDSTAT4	Module Status Register 4 (TSIP)
0x814	MDSTAT5	Module Status Register 5 (Debug Subsystem and Tracers)
0x818	MDSTAT6	Module Status Register 6 (Per-core TETB and System TETB)
0x81C	MDSTAT7	Module Status Register 7 (Packet Accelerator)
0x820	MDSTAT8	Module Status Register 8 (Ethernet SGMIIs)
0x824	MDSTAT9	Module Status Register 9 (Security Accelerator)
0x828	MDSTAT10	Module Status Register 10 (PCIe)
0x82C	MDSTAT11	Module Status Register 11 (SRIO)
0x830	MDSTAT12	Module Status Register 12 (HyperLink)
0x834	MDSTAT13	Module Status Register 13 (Reserved)
0x838	MDSTAT14	Module Status Register 14 (MSMC RAM)
0x83C	MDSTAT15	Module Status Register 15 (C66x CorePac0 and Timer 0)
0x840	MDSTAT16	Module Status Register 16 (C66x CorePac1 and Timer 1)
0x844	MDSTAT17	Module Status Register 17 (C66x CorePac2 and Timer 2)
0x848	MDSTAT18	Module Status Register 18 (C66x CorePac3 and Timer 3)
0x84C	MDSTAT19	Module Status Register 19 (C66x CorePac4 and Timer 4)
0x850	MDSTAT20	Module Status Register 20 (C66x CorePac5 and Timer 5)
0x854	MDSTAT21	Module Status Register 21 (C66x CorePac6 and Timer 6)
0x858	MDSTAT22	Module Status Register 22 (C66x CorePac7 and Timer 7)
0x85C - 0x9FC	Reserved	Reserved
0xA00	MDCTL0	Module Control Register 0 (Never Gated)
0xA04	MDCTL1	Module Control Register 1 (SmartReflex)
0xA08	MDCTL2	Module Control Register 2 (DDR3 EMIF)
0xA0C	MDCTL3	Module Control Register 3 (EMIF16 and SPI)
0xA10	MDCTL4	Module Control Register 4 (TSIP)
0xA14	MDCTL5	Module Control Register 5 (Debug Subsystem and Tracers)
0xA18	MDCTL6	Module Control Register 6 (Per-core TETB and System TETB)
0xA1C	MDCTL7	Module Control Register 7 (Packet Accelerator)
0xA20	MDCTL8	Module Control Register 8 (Ethernet SGMIIs)
0xA24	MDCTL9	Module Control Register 9 (Security Accelerator)
0xA28	MDCTL10	Module Control Register 10 (PCIe)
0xA2C	MDCTL11	Module Control Register 11 (SRIO)
0xA30	MDCTL12	Module Control Register 12 (HyperLink)
0xA34	MDCTL13	Module Control Register 13 (Reserved)
0xA38	MDCTL14	Module Control Register 14 (MSMC RAM)
0xA3C	MDCTL15	Module Control Register 15 (C66x CorePac0 and Timer 0)
0xA40	MDCTL16	Module Control Register 16 (C66x CorePac1 and Timer 1)
0xA44	MDCTL17	Module Control Register 17 (C66x CorePac2 and Timer 2)

Copyright 2014 Texas Instruments Incorporated

Table 7-8 PSC Register Memory Map (Sheet 3 of 3)

Offset	Register	Description
0xA48	MDCTL18	Module Control Register 18 (C66x CorePac3 and Timer 3)
0xA4C	MDCTL19	Module Control Register 19 (C66x CorePac4 and Timer 4)
0xA50	MDCTL20	Module Control Register 20 (C66x CorePac5 and Timer 5)
0xA54	MDCTL21	Module Control Register 21 (C66x CorePac6 and Timer 6)
0xA58	MDCTL22	Module Control Register 22 (C66x CorePac7 and Timer 7)
0xA5C - 0xFFC	Reserved	Reserved
End of Table 7-8		

1 VCNTLID register is available for debug purposes only.

7.5 Reset Controller

The reset controller detects the different type of resets supported on the TMS320C6678 device and manages the distribution of those resets throughout the device.

The device has several types of resets:

- Power-on reset
- Hard reset
- Soft reset
- CPU local reset

Table 7-9 explains further the types of reset, the reset initiator, and the effects of each reset on the device. For more information on the effects of each reset on the PLL controllers and their clocks, see Section "Reset Electrical Data / Timing" on page 138

Table 7-9 Reset Types

Reset Type	Initiator	Effect on Device When Reset Occurs	RESETSTAT Pin Status
POR (Power On Reset)	POR pin active low RESETFULL pin active low	Total reset of the chip. Everything on the device is reset to its default state in response to this. Activates the POR signal on chip, which is used to reset test/emu logic. Boot configurations are latched. ROM boot process is initiated.	Toggles RESETSTAT pin
Hard Reset	RESET pin active low Emulation PLLCTL register (RSCTRL) Watchdog timers	Resets everything except for test/emu logic and reset isolation modules. Emulator and reset Isolation modules stay alive during this reset. This reset is also different from POR in that the PLLCTL assumes power and clocks are stable when device reset is asserted. Boot configurations are not latched. ROM boot process is initiated.	Toggles RESETSTAT pin
Soft Reset	RESET pin active low PLLCTL register (RSCTRL) Watchdog timers	Software can program these initiators to be hard or soft. Hard reset is the default, but can be programmed to be soft reset. Soft reset will behave like hard reset except that EMIF16 MMRs, DDR3 EMIF MMRs, the sticky bits in PCIe MMRs, and external memory contents are retained. Boot configurations are not latched. ROM boot process is initiated.	Toggles RESETSTAT pin
C66x CorePac local reset	Software (through LPSC MMR) Watchdog timers LRESET pin	MMR bit in LPSC controls C66x CorePac local reset. Used by watchdog timers (in the event of a timeout) to reset C66x CorePac. Can also be initiated by LRESET device pin. C66x CorePac memory system and slave DMA port are still alive when C66x CorePac is in local reset. Provides a local reset of the C66x CorePac, without destroying clock alignment or memory contents. Does not initiate ROM boot process.	Does not toggle RESETSTAT pin
End of Table 7-9			

7.5.1 Power-on Reset

Power-on reset is used to reset the entire device, including the test and emulation logic.

Power-on reset is initiated by the following

1. $\overline{\text{POR}}$ pin
2. $\overline{\text{RESETFULL}}$ pin

During power-up, the $\overline{\text{POR}}$ pin must be asserted (driven low) until the power supplies have reached their normal operating conditions. A $\overline{\text{RESETFULL}}$ pin is also provided to allow the on-board host to reset the entire device including the reset isolated logic. The assumption is that, device is already powered up and hence unlike $\overline{\text{POR}}$, $\overline{\text{RESETFULL}}$ pin will be driven by the on-board host control other than the power good circuitry. For power-on reset, the Main PLL Controller comes up in bypass mode and the PLL is not enabled. Other resets do not affect the state of the PLL or the dividers in the PLL controller.

The following sequence must be followed during a power-on reset:

1. Wait for all power supplies to reach normal operating conditions while keeping the $\overline{\text{POR}}$ pin asserted (driven low). While $\overline{\text{POR}}$ is asserted, all pins except $\overline{\text{RESETSTAT}}$ will be set to high-impedance. After the $\overline{\text{POR}}$ pin is de-asserted (driven high), all Z group pins, low group pins, and high group pins are set to their reset state and will remain at their reset state until otherwise configured by their respective peripheral. All peripherals that are power managed, are disabled after a Power-on Reset and must be enabled through the Device State Control registers (for more details, see Section Table 3-2 "Device State Control Registers" on page 74).
2. Clocks are reset, and they are propagated throughout the chip to reset any logic that was using reset synchronously. All logic is now reset and $\overline{\text{RESETSTAT}}$ will be driven low indicating that the device is in reset.
3. $\overline{\text{POR}}$ must be held active until all supplies on the board are stable then for at least an additional time for the Chip level PLLs to lock.
4. The $\overline{\text{POR}}$ pin can now be de-asserted. Reset sampled pin values are latched at this point. The Chip level PLLs is taken out of reset and begins its locking sequence, and all power-on device initialization also begins.
5. After device initialization is complete, the $\overline{\text{RESETSTAT}}$ pin is de-asserted (driven high). By this time, DDR3 PLL has already completed its locking sequence and is outputting a valid clock. The system clocks of both PLL controllers are allowed to finish their current cycles and then paused for 10 cycles of their respective system reference clocks. After the pause, the system clocks are restarted at their default divide by settings.
6. The device is now out of reset and device execution begins as dictated by the selected boot mode.

Note—To most of the device, reset is de-asserted only when the $\overline{\text{POR}}$ and $\overline{\text{RESET}}$ pins are both de-asserted (driven high). Therefore, in the sequence described above, if the $\overline{\text{RESET}}$ pin is held low past the low period of the $\overline{\text{POR}}$ pin, most of the device will remain in reset. The $\overline{\text{RESET}}$ pin should not be tied together with the $\overline{\text{POR}}$ pin.

Copyright 2014 Texas Instruments Incorporated

7.5.2 Hard Reset

A hard reset will reset everything on the device except the PLLs, test, emulation logic, and reset isolation modules. $\overline{\text{POR}}$ should also remain de-asserted during this time.

Hard reset is initiated by the following

- $\overline{\text{RESET}}$ pin
- RSCTRL register in PLLCTL
- Watchdog timer
- Emulation

All the above initiators by default are configured to act as hard reset. Except emulation, all the other 3 initiators can be configured as soft resets in the RSCFG register in PLLCTL.

The following sequence must be followed during a hard reset:

1. The $\overline{\text{RESET}}$ pin is pulled active low for a minimum of 24 CLKIN1 cycles. During this time the $\overline{\text{RESET}}$ signal is able to propagate to all modules (except those specifically mentioned above). All I/O are Hi-Z for modules affected by $\overline{\text{RESET}}$, to prevent off-chip contention during the warm reset.
2. Once all logic is reset, $\overline{\text{RESETSTAT}}$ is driven active to denote that the device is in reset.
3. The $\overline{\text{RESET}}$ pin can now be released. A minimal device initialization begins to occur. Note that configuration pins are not re-latched and clocking is unaffected within the device.
4. After device initialization is complete, the $\overline{\text{RESETSTAT}}$ pin is de-asserted (driven high).

Note—The $\overline{\text{POR}}$ pin should be held inactive (high) throughout the warm reset sequence. Otherwise, if $\overline{\text{POR}}$ is activated (brought low), the minimum $\overline{\text{POR}}$ pulse width must be met. The $\overline{\text{RESET}}$ pin should not be tied together with the $\overline{\text{POR}}$ pin.

7.5.3 Soft Reset

A soft reset will behave like a hard reset except that EMIF16 MMRs, DDR3 EMIF MMRs and the PCIe MMRs sticky bits, and external memory contents are retained. $\overline{\text{POR}}$ should also remain de-asserted during this time.

Soft reset is initiated by the following

- $\overline{\text{RESET}}$ pin
- RSCTRL register in PLLCTL
- Watchdog timer

All the above initiators by default are configured to act as hard reset. Except emulation, all the other 3 initiators can be configured as soft resets in the RSCFG register in PLLCTL.

In the case of a soft reset, the clock logic or the power control logic of the peripherals are not affected, and, therefore, the enabled/disabled state of the peripherals is not affected. On a soft reset, the DDR3 memory controller registers are ***not*** reset. In addition, the DDR3 SDRAM memory content is retained if the user places the DDR3 SDRAM in self-refresh mode before invoking the soft reset.

During a soft reset, the following happens:

1. The $\overline{\text{RESETSTAT}}$ pin goes low to indicate an internal reset is being generated. The reset is allowed to propagate through the system. Internal system clocks are not affected. PLLs also remain locked.
2. After device initialization is complete, the $\overline{\text{RESETSTAT}}$ pin is deasserted (driven high). In addition, the PLL controllers pause their system clocks for about 8 cycles.

   At this point:

   - The state of the peripherals before the soft reset is not changed.
   - The I/O pins are controlled as dictated by the DEVSTAT register.
   - The DDR3 MMRs and the PCIe MMRs sticky bits retain their previous values. Only the DDR3 Memory Controller and PCIe state machines are reset by the soft reset.
   - The PLL controllers are operating in the mode prior to soft reset. System clocks are unaffected.

The boot sequence is started after the system clocks are restarted. Because the configuration pins are not latched with a System Reset, the previous values, as shown in the DEVSTAT register, are used to select the boot mode.

Copyright 2014 Texas Instruments Incorporated

7.5.4 Local Reset

The local reset can be used to reset a particular CorePac without resetting any other chip components.

Local reset is initiated by the following (for more details see the *Phase Locked Loop (PLL) for KeyStone Devices User Guide* in "Related Documentation from Texas Instruments" on page 72:

- $\overline{\text{LRESET}}$ pin
- Watchdog timer should cause one of the below based on the setting of the CORESEL[2:0] and RSTCFG register in the PLL controller. See "Reset Configuration Register (RSTCFG)" on page 148 and "CIC Registers" on page 183:
  - Local reset
  - NMI
  - NMI followed by a time delay and then a local reset for the CorePac selected
  - Hard Reset by requesting reset via PLLCTL
- LPSC MMRs (memory-mapped registers)

7.5.5 Reset Priority

If any of the above reset sources occur simultaneously, the PLLCTL processes only the highest priority reset request. The reset request priorities are as follows (high to low):

- Power-on reset
- Hard/soft reset

7.5.6 Reset Controller Register

The reset controller register are part of the PLLCTL MMRs. All C6678 device-specific MMRs are covered in Section 7.6.3 "Main PLL Control Register" on page 150. For more details on these registers and how to program them, see the *Phase Locked Loop (PLL) for KeyStone Devices User Guide* in "Related Documentation from Texas Instruments" on page 72.

Copyright 2014 Texas Instruments Incorporated

7.5.7 Reset Electrical Data / Timing

Table 7-10 Reset Timing Requirements (1)
(see Figure 7-6 and Figure 7-7)

No.			Min	Max	Unit
RESETFULL Pin Reset					
1	tw(RESETFULL)	Pulse width - Pulse width RESETFULL low	500C		ns
Soft/Hard-Reset					
2	tw(RESET)	Pulse width - Pulse width RESET low	500C		ns
End of Table 7-10					

1 C = 1/SYSCLK1 frequency in ns.

Table 7-11 Reset Switching Characteristics Over Recommended Operating Conditions (1)
(see Figure 7-6 and Figure 7-7)

No.	Parameter		Min	Max	Unit
RESETFULL Pin Reset					
3	td(RESETFULLH-RESETSTATH)	Delay time - RESETSTAT high after RESETFULL high		50000C	ns
Soft/Hard Reset					
4	td(RESETH-RESETSTATH)	Delay time - RESETSTAT high after RESET high		50000C	ns
End of Table 7-11					

1 C = 1/SYSCLK1 frequency in ns.

Figure 7-6 RESETFULL Reset Timing

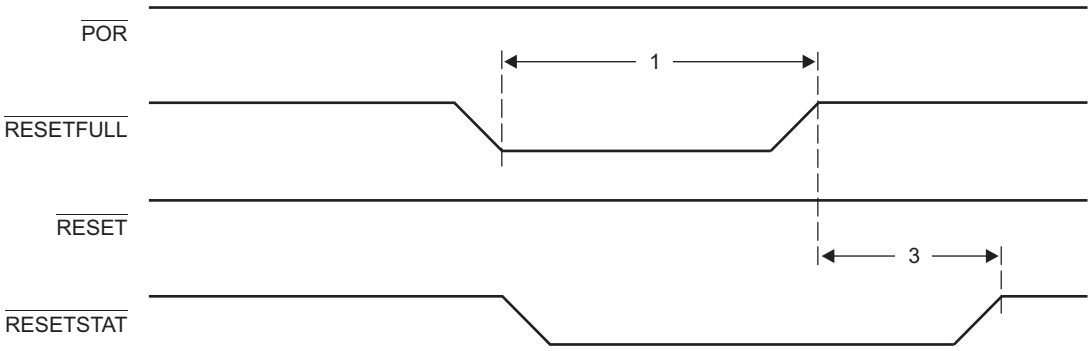

Figure 7-7 Soft/Hard-Reset Timing

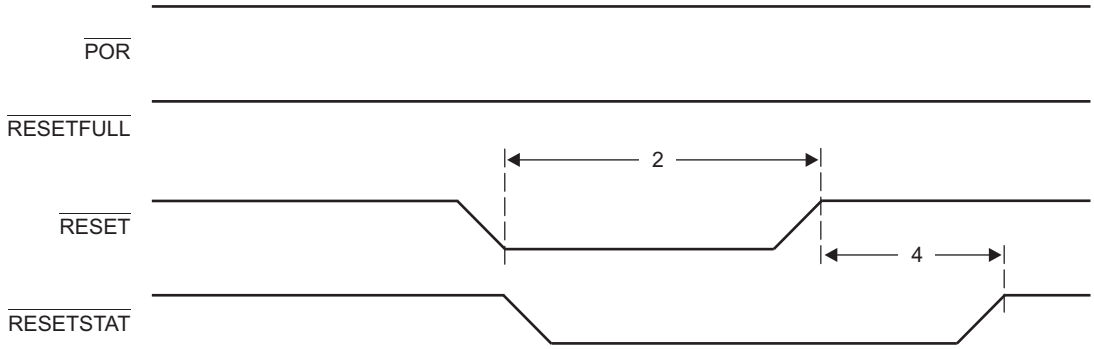

Copyright 2014 Texas Instruments Incorporated

Table 7-12 Boot Configuration Timing Requirements [1]
(See Figure 7-8)

No.			Min	Max	Unit
1	tsu(GPIOn-$\overline{\text{RESETFULL}}$)	Setup time - GPIO valid before $\overline{\text{RESETFULL}}$ asserted	12C		ns
2	th($\overline{\text{RESETFULL}}$-GPIOn)	Hold time - GPIO valid after $\overline{\text{RESETFULL}}$ asserted	12C		ns
End of Table 7-12					

1 C = 1/SYSCLK1 frequency in ns.

Figure 7-8 Boot Configuration Timing

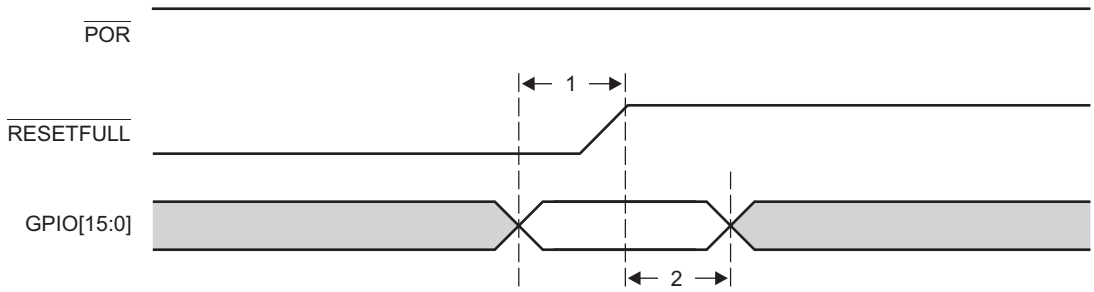

7.6 Main PLL and PLL Controller

This section provides a description of the Main PLL and the PLL Controller. For details on the operation of the PLL Controller module, see the *Phase Locked Loop (PLL) for KeyStone Devices User Guide* in "Related Documentation from Texas Instruments" on page 72.

The Main PLL is controlled by the standard PLL Controller. The PLL controller manages the clock ratios, alignment, and gating for the system clocks to the device. Figure 7-9 shows a block diagram of the main PLL and the PLL Controller.

Figure 7-9 Main PLL and PLL Controller

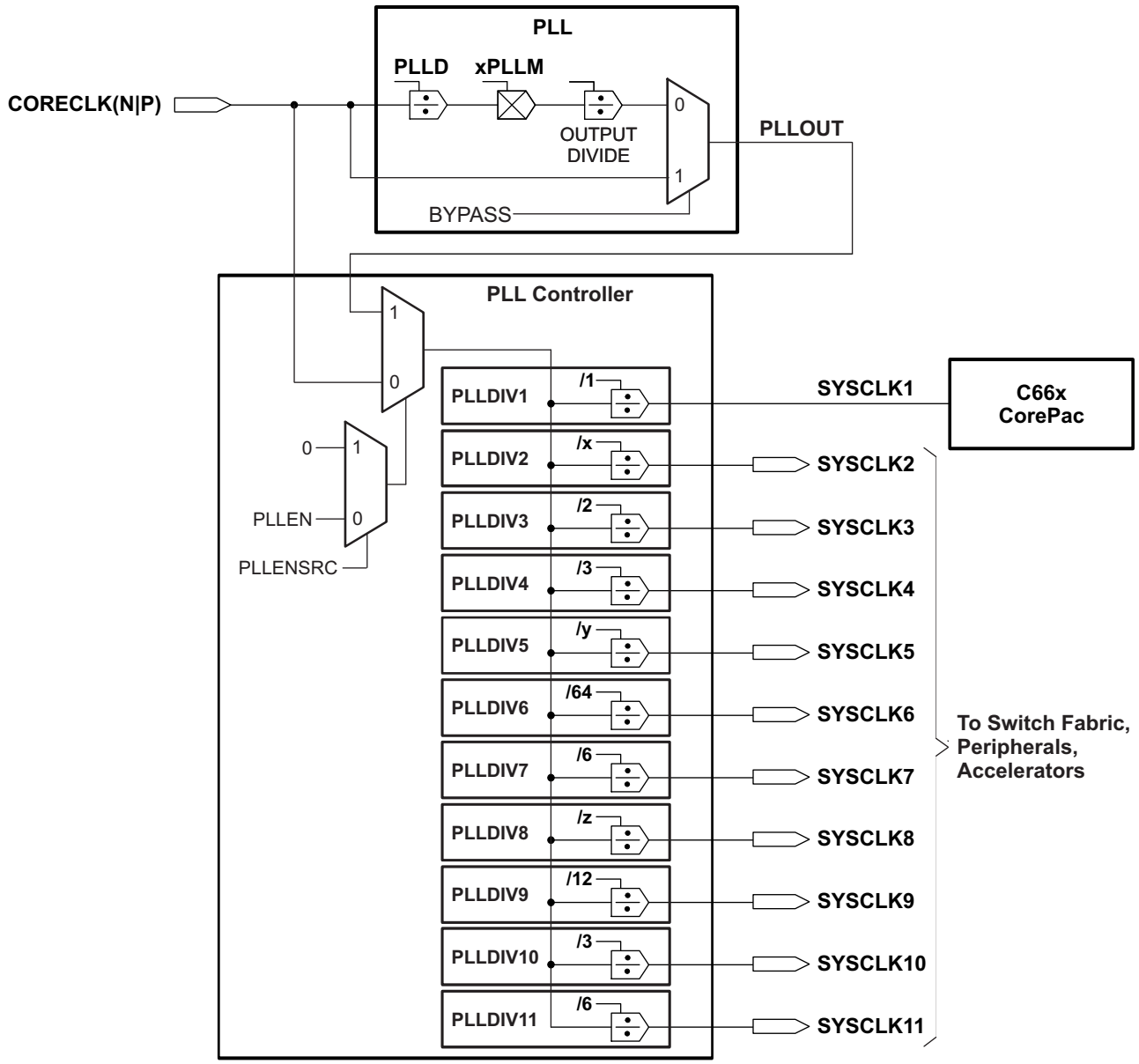

Copyright 2014 Texas Instruments Incorporated

Note—The Main PLL Controller registers can be accessed by any master in the device. The PLLM[5:0] bits of the multiplier are controlled by the PLLM register inside the PLL controller and PLLM[12:6] bits are controlled by the chip-level MAINPLLCTL0 register. The Output Divide and Bypass logic of the PLL are controlled by fields in the SECCTL register in the PLL controller. Only PLLDIV2, PLLDIV5, and PLLDIV8 are programmable on the C6678 device. See the *Phase Locked Loop (PLL) for KeyStone Devices User Guide* in "Related Documentation from Texas Instruments" on page 72 for more details on how to program the PLL controller.

The multiplication and division ratios within the PLL and the post-division for each of the chip-level clocks are determined by a combination of this PLL and the PLL Controller. The PLL controller also controls reset propagation through the chip, clock alignment, and test points. The PLL controller monitors the PLL status and provides an output signal indicating when the PLL is locked.

Main PLL power is supplied externally via the Main PLL power-supply pin (AVDDA1). An external EMI filter circuit must be added to all PLL supplies. See the *Hardware Design Guide for KeyStone I Devices* in "Related Documentation from Texas Instruments" on page 72 for detailed recommendations. For the best performance, TI recommends that all the PLL external components be on a single side of the board without jumpers, switches, or components other than those shown. For reduced PLL jitter, maximize the spacing between switching signal traces and the PLL external components (C1, C2, and the EMI Filter).

The minimum SYSCLK rise and fall times should also be observed. For the input clock timing requirements, see Section 7.6.5 "Main PLL Controller/SRIO/HyperLink/PCIe Clock Input Electrical Data/Timing".

Note—The PLL controller module as described in the see the *Phase Locked Loop (PLL) for KeyStone Devices User Guide* in "Related Documentation from Texas Instruments" on page 72 includes a superset of features, some of which are not supported on the TMS320C6678 device. The following sections describe the registers that are supported; it should be assumed that any registers not included in these sections is not supported by the device. Furthermore, only the bits within the registers described here are supported. Avoid writing to any reserved memory location or changing the value of reserved bits.

7.6.1 Main PLL Controller Device-Specific Information

7.6.1.1 Internal Clocks and Maximum Operating Frequencies

The Main PLL, used to drive the CorePacs, the switch fabric, and a majority of the peripheral clocks (all but the DDR3 and the network coprocessor (PASS)) requires a PLL controller to manage the various clock divisions, gating, and synchronization. The Main PLL Controller has several SYSCLK outputs that are listed below, along with the clock description. Each SYSCLK has a corresponding divider that divides down the output clock of the PLL. Note that dividers are not programmable unless explicitly mentioned in the description below.

- **SYSCLK1:** Full-rate clock for the CorePacs.
- **SYSCLK2:** 1/x-rate clock for CorePac (emulation). Default rate for this is 1/3. This is programmable from /1 to /32, where this clock does not violate the max of 350 MHz. The SYSCLK2 can be turned off by software.
- **SYSCLK3:** 1/2-rate clock used to clock the MSMC, HyperLink, CPU/2 TeraNet, DDR EMIF and CPU/2 EDMA.
- **SYSCLK4:** 1/3-rate clock for the switch fabrics and fast peripherals. The Debug_SS and ETBs use this as well.
- **SYSCLK5:** 1/y-rate clock for system trace module, only. Default rate for this is 1/5. It is configurable and the max configurable clock is 210 MHz and min configuration clock is 32 MHz. The SYSCLK5 can be turned off by software.

- **SYSCLK6:** 1/64-rate clock. 1/64 rate clock (emif_ptv) used to clock the PVT compensated buffers for DDR3 EMIF.
- **SYSCLK7:** 1/6-rate clock for slow peripherals (GPIO, UART, Timer, I^2C, SPI, EMIF16, etc.) and sources the SYSCLKOUT output pin.
- **SYSCLK8:** 1/z-rate clock. This clock is used as slow_sysclk in the system. Default for this will be 1/64. This is programmable from /24 to /80.
- **SYSCLK9:** 1/12-rate clock for SmartReflex.
- **SYSCLK10:** 1/3-rate clock for SRIO only.
- **SYSCLK11:** 1/6-rate clock for PSC only.

Only SYSCLK2, SYSCLK5, and SYSCLK8 are programmable on the TMS320C6678 device.

Note—In case any of the other programmable SYSCLKs are set slower than 1/64 rate, then SYSCLK8 (SLOW_SYSCLK) must be programmed to either match, or be slower than, the slowest SYSCLK in the system.

7.6.1.2 Main PLL Controller Operating Modes

The Main PLL Controller has two modes of operation: bypass mode and PLL mode. The mode of operation is determined by BYPASS bit of the PLL Secondary control register (SECCTL). In PLL mode, SYSCLK1 is generated from the PLL output using the values set in PLLM and PLLD bit fields in the MAINPLLCTL0 register. In bypass mode, PLL input is fed directly out as SYSCLK1.

All hosts must hold off accesses to the DSP while the frequency of its internal clocks is changing. A mechanism must be in place such that the DSP notifies the host when the PLL configuration has completed.

7.6.1.3 Main PLL Stabilization, Lock, and Reset Times

The PLL stabilization time is the amount of time that must be allotted for the internal PLL regulators to become stable after device powerup. The PLL should not be operated until this stabilization time has elapsed.

The PLL reset time is the amount of wait time needed when resetting the PLL (writing PLLRST = 1), in order for the PLL to properly reset, before bringing the PLL out of reset (writing PLLRST = 0). For the Main PLL reset time value, see Table 7-13.

The PLL lock time is the amount of time needed from when the PLL is taken out of reset (PLLRST = 1) to when to when the PLL Controller can be switched to PLL mode. The Main PLL lock time is given in Table 7-13.

Table 7-13 Main PLL Stabilization, Lock, and Reset Times

	Min	Typ	Max	Unit
PLL stabilization time	100			µs
PLL lock time			500×(PLLD [1]+1)×C [2]	
PLL reset time	1000			ns
End of Table 7-13				

1 PLLD is the value in PLLD bit fields of MAINPLLCTL0 register
2 C = SYSCLK1 cycle time in ns.

Copyright 2014 Texas Instruments Incorporated

7.6.2 PLL Controller Memory Map

The memory map of the PLL Controller is shown in Table 7-14. TMS320C6678-specific PLL Controller register definitions can be found in the sections following Table 7-14. For other registers in the table, see the *Phase Locked Loop (PLL) for KeyStone Devices User Guide* in "Related Documentation from Texas Instruments" on page 72.

Note—Only registers documented here are accessible on the TMS320C6678. Other addresses in the PLL Controller memory map including the reserved registers should not be modified. Furthermore, only the bits within the registers described here are supported. Avoid writing to any reserved memory location or changing the value of reserved bits. It is recommended to use read-modify-write sequence to make any changes to the valid bits in the register.

Table 7-14 PLL Controller Registers (Including Reset Controller) (Sheet 1 of 2)

Hex Address Range	Field	Register Name
0231 0000 - 0231 00E3	-	Reserved
0231 00E4	RSTYPE	Reset Type Status Register (Reset Controller)
0231 00E8	RSTCTRL	Software Reset Control Register (Reset Controller)
0231 00EC	RSTCFG	Reset Configuration Register (Reset Controller)
0231 00F0	RSISO	Reset Isolation Register (Reset Controller)
0231 00F0 - 0231 00FF	-	Reserved
0231 0100	PLLCTL	PLL Control Register
0231 0104	-	Reserved
0231 0108	SECCTL	PLL Secondary Control Register
0231 010C	-	Reserved
0231 0110	PLLM	PLL Multiplier Control Register
0231 0114	-	Reserved
0231 0118	PLLDIV1	Reserved
0231 011C	PLLDIV2	PLL Controller Divider 2 Register
0231 0120	PLLDIV3	Reserved
0231 0124	-	Reserved
0231 0128	-	Reserved
0231 012C - 0231 0134	-	Reserved
0231 0138	PLLCMD	PLL Controller Command Register
0231 013C	PLLSTAT	PLL Controller Status Register
0231 0140	ALNCTL	PLL Controller Clock Align Control Register
0231 0144	DCHANGE	PLLDIV Ratio Change Status Register
0231 0148	CKEN	Reserved
0231 014C	CKSTAT	Reserved
0231 0150	SYSTAT	SYSCLK Status Register
0231 0154 - 0231 015C	-	Reserved
0231 0160	PLLDIV4	Reserved
0231 0164	PLLDIV5	PLL Controller Divider 5 Register
0231 0168	PLLDIV6	Reserved
0231 016C	PLLDIV7	Reserved
0231 0170	PLLDIV8	PLL Controller Divider 8 Register

Table 7-14 PLL Controller Registers (Including Reset Controller) (Sheet 2 of 2)

Hex Address Range	Field	Register Name
0231 0174 - 0231 0193	PLLDIV9 - PLLDIV16	Reserved
0231 0194 - 0231 01FF	-	Reserved
End of Table 7-14		

7.6.2.1 PLL Secondary Control Register (SECCTL)

The PLL Secondary Control Register contains extra fields to control the Main PLL and is shown in Figure 7-10 and described in Table 7-15.

Figure 7-10 PLL Secondary Control Register (SECCTL))

31 24	23	22 19	18 0
Reserved	BYPASS	OUTPUT DIVIDE	Reserved
R-0000 0000	RW-0	RW-0001	RW-001 0000 0000 0000 0000

Legend: R/W = Read/Write; R = Read only; -*n* = value after reset

Table 7-15 PLL Secondary Control Register (SECCTL) Field Descriptions

Bit	Field	Description
31-24	Reserved	Reserved
23	BYPASS	Main PLL Bypass Enable 0 = Main PLL Bypass disabled 1 = Main PLL Bypass enabled
22-19	OUTPUT DIVIDE	Output Divider ratio bits. 0h = ÷1. Divide frequency by 1. 1h = ÷2. Divide frequency by 2. 2h - Fh = Reserved.
18-0	Reserved	Reserved
End of Table 7-15		

Copyright 2014 Texas Instruments Incorporated

7.6.2.2 PLL Controller Divider Register (PLLDIV2, PLLDIV5, PLLDIV8)

The PLL controller divider registers (PLLDIV2, PLLDIV5, and PLLDIV8) are shown in Figure 7-11 and described in Table 7-16. The default values of the RATIO field on a reset for PLLDIV2, PLLDIV5, and PLLDIV8 are different and mentioned in the footnote of Figure 7-11.

Figure 7-11 PLL Controller Divider Register (PLLDIVn)

31 16	15	14 8	7 0
Reserved	Dn (1) EN	Reserved	RATIO
R-0	R/W-1	R-0	R/W-n (2)

Legend: R/W = Read/Write; R = Read only; -*n* = value after reset

1 D2EN for PLLDIV2; D5EN for PLLDIV5; D8EN for PLLDIV8
2 n=02h for PLLDIV2; n=04h for PLLDIV5; n=3Fh for PLLDIV8

Table 7-16 PLL Controller Divider Register (PLLDIVn) Field Descriptions

Bit	Field	Description
31-16	Reserved	Reserved.
15	D*n*EN	Divider D*n* enable bit. (see footnote of Figure 7-11) 0 = Divider *n* is disabled. 1 = No clock output. Divider *n* is enabled.
14-8	Reserved	Reserved. The reserved bit location is always read as 0. A value written to this field has no effect.
7-0	RATIO	Divider ratio bits. (see footnote of Figure 7-11) 0h = ÷1. Divide frequency by 1. 1h = ÷2. Divide frequency by 2. 2h = ÷3. Divide frequency by 3. 3h = ÷4. Divide frequency by 4. 4h - 4Fh = ÷5 to ÷80. Divide frequency by 5 to divide frequency by 80.
End of Table 7-16		

7.6.2.3 PLL Controller Clock Align Control Register (ALNCTL)

The PLL Controller clock align control register (ALNCTL) is shown in Figure 7-12 and described in Table 7-17.

Figure 7-12 PLL Controller Clock Align Control Register (ALNCTL)

31 8	7	6 5	4	3 2	1	0
Reserved	ALN8	Reserved	ALN5	Reserved	ALN2	Reserved
R-0	R/W-1	R-0	R/W-1	R-0	R/W-1	R-0

Legend: R/W = Read/Write; R = Read only; -*n* = value after reset, for reset value

Table 7-17 PLL Controller Clock Align Control Register (ALNCTL) Field Descriptions

Bit	Field	Description
31-8 6-5 3-2 0	Reserved	Reserved. The reserved bit location is always read as 0. A value written to this field has no effect.
7 4 1	ALN8 ALN5 ALN2	SYSCLK*n* alignment. Do not change the default values of these fields. 0 = Do not align SYSCLK*n* to other SYSCLKs during GO operation. If SYS*n* in DCHANGE is set, SYSCLK*n* switches to the new ratio immediately after the GOSET bit in PLLCMD is set. 1 = Align SYSCLK*n* to other SYSCLKs selected in ALNCTL when the GOSET bit in PLLCMD is set and SYS*n* in DCHANGE is 1. The SYSCLK*n* rate is set to the ratio programmed in the RATIO bit in PLLDIV*n*.
End of Table 7-17		

7.6.2.4 PLLDIV Divider Ratio Change Status Register (DCHANGE)

Whenever a different ratio is written to the PLLDIV*n* registers, the PLLCTL flags the change in the DCHANGE status register. During the GO operation, the PLL Controller will change only the divide ratio of the SYSCLKs with the bit set in DCHANGE. Note that the ALNCTL register determines if that clock also needs to be aligned to other clocks. The PLLDIV divider ratio change status register is shown in Figure 7-13 and described in Table 7-18.

Figure 7-13 PLLDIV Divider Ratio Change Status Register (DCHANGE)

31	8	7	6	5	4	3	2	1	0
Reserved		SYS8	Reserved		SYS5	Reserved		SYS2	Reserved
R-0		R/W-0	R-0		R/W-0	R-0		R/W-0	R-0

Legend: R/W = Read/Write; R = Read only; -*n* = value after reset, for reset value

Table 7-18 PLLDIV Divider Ratio Change Status Register (DCHANGE) Field Descriptions

Bit	Field	Description
31-8 6-5 3-2 0	Reserved	Reserved. The reserved bit location is always read as 0. A value written to this field has no effect.
7 4 1	SYS8 SYS5 SYS2	Identifies when the SYSCLK*n* divide ratio has been modified. 0 = SYSCLK*n* ratio has not been modified. When GOSET is set, SYSCLK*n* will not be affected. 1 = SYSCLK*n* ratio has been modified. When GOSET is set, SYSCLK*n* will change to the new ratio.
End of Table 7-18		

7.6.2.5 SYSCLK Status Register (SYSTAT)

The SYSCLK status register (SYSTAT) shows the status of SYSCLK[11:1]. SYSTAT is shown in Figure 7-14 and described in Table 7-19.

Figure 7-14 SYSCLK Status Register (SYSTAT)

31	11	10	9	8	7	6	5	4	3	2	1	0
Reserved		SYS11ON	SYS10ON	SYS9ON	SYS8ON	SYS7ON	SYS6ON	SYS5ON	SYS4ON	SYS3ON	SYS2ON	SYS1ON
R-n		R-1	R-1	R-1	R-1	R-1	R-1	R-1	R-1	R-1	R-1	R-1

Legend: R/W = Read/Write; R = Read only; -*n* = value after reset

Copyright 2014 Texas Instruments Incorporated

Table 7-19 SYSCLK Status Register (SYSTAT) Field Descriptions

Bit	Field	Description
31-11	Reserved	Reserved. The reserved bit location is always read as 0. A value written to this field has no effect.
10-0	SYS[N (1)]ON	SYSCLK[N] on status. 0 = SYSCLK[N] is gated. 1 = SYSCLK[N] is on.
End of Table 7-19		

1 Where N = 1, 2, 3,....N (Not all these output clocks may be used on a specific device. For more information, see the device-specific data manual)

7.6.2.6 Reset Type Status Register (RSTYPE)

The reset type status (RSTYPE) register latches the cause of the last reset. If multiple reset sources occur simultaneously, this register latches the highest priority reset source. The Reset Type Status Register is shown in Figure 7-15 and described in Table 7-20.

Figure 7-15 Reset Type Status Register (RSTYPE)

31 29	28	27 12	11 8	7 3	2	1	0
Reserved	EMU-RST	Reserved	WDRST[N]	Reserved	PLLCTRLRST	$\overline{\text{RESET}}$	$\overline{\text{POR}}$
R-0	R-0	R-0	R-0	R-0	R-0	R-0	R-0

Legend: R = Read only; -*n* = value after reset

Table 7-20 Reset Type Status Register (RSTYPE) Field Descriptions

Bit	Field	Description
31-29	Reserved	Reserved. Read only. Always reads as 0. Writes have no effect.
28	EMU-RST	Reset initiated by emulation. 0 = Not the last reset to occur. 1 = The last reset to occur.
27-12	Reserved	Reserved. Read only. Always reads as 0. Writes have no effect.
11 10 9 8	WDRST3 WDRST2 WDRST1 WDRST0	Reset initiated by watchdog timer[N]. 0 = Not the last reset to occur. 1 = The last reset to occur.
7-3	Reserved	Reserved. Read only. Always reads as 0. Writes have no effect.
2	PLLCTLRST	Reset initiated by PLLCTL. 0 = Not the last reset to occur. 1 = The last reset to occur.
1	$\overline{\text{RESET}}$	$\overline{\text{RESET}}$ reset. 0 = $\overline{\text{RESET}}$ was not the last reset to occur. 1 = $\overline{\text{RESET}}$ was the last reset to occur.
0	$\overline{\text{POR}}$	Power-on reset. 0 = Power-on reset was not the last reset to occur. 1 = Power-on reset was the last reset to occur.
End of Table 7-20		

7.6.2.7 Reset Control Register (RSTCTRL)

This register contains a key that enables writes to the MSB of this register and the RSTCFG register. The key value is 0x5A69. A valid key will be stored as 0x000C, any other key value is invalid. When the RSTCTRL or the RSTCFG is written, the key is invalidated. Every write must be set up with a valid key. The Software Reset Control Register (RSTCTRL) is shown in Figure 7-16 and described in Table 7-21.

Figure 7-16 Reset Control Register (RSTCTRL)

31	17	16	15	0
Reserved		SWRST	KEY	
R-0x0000		R/W-0x (1)	R/W-0x0003	

Legend: R = Read only; -*n* = value after reset;

1 Writes are conditional based on valid key.

Table 7-21 Reset Control Register (RSTCTRL) Field Descriptions

Bit	Field	Description
31-17	Reserved	Reserved.
16	SWRST	Software reset 0 = Reset 1 = Not reset
15-0	KEY	Key used to enable writes to RSTCTRL and RSTCFG.
End of Table 7-21		

7.6.2.8 Reset Configuration Register (RSTCFG)

This register is used to configure the type of reset initiated by $\overline{\text{RESET}}$, watchdog timer and the PLL Controller's RSTCTRL Register; i.e., a hard reset or a soft reset. By default, these resets will be hard resets. The Reset Configuration Register (RSTCFG) is shown in Figure 7-17 and described in Table 7-22.

Figure 7-17 Reset Configuration Register (RSTCFG)

31	14	13	12	11	4	3	0
Reserved		PLLCTLRSTTYPE	$\overline{\text{RESET}}$TYPE	Reserved		WDTYPE[N (1)]	
R-0		R/W-0 (2)	R/W-0[2]	R-0		R/W-0[2]	

Legend: R = Read only; R/W = Read/Write; -*n* = value after reset

1 Where N = 1, 2, 3,....N (Not all these output may be used on a specific device. For more information, see the device-specific data manual)
2 Writes are conditional based on valid key. For details, see Section 7.6.2.7 "Reset Control Register (RSTCTRL)".

Table 7-22 Reset Configuration Register (RSTCFG) Field Descriptions (Sheet 1 of 2)

Bit	Field	Description
31-14	Reserved	Reserved.
13	PLLCTLRSTTYPE	PLL Controller initiates a software-driven reset of type: 0 = Hard reset (default) 1 = Soft reset
12	$\overline{\text{RESET}}$TYPE	$\overline{\text{RESET}}$ initiates a reset of type: 0 = Hard reset (default) 1 = Soft reset

Copyright 2014 Texas Instruments Incorporated

Table 7-22 Reset Configuration Register (RSTCFG) Field Descriptions (Sheet 2 of 2)

Bit	Field	Description
11-4	Reserved	Reserved.
3 2 1 0	WDTYPE3 WDTYPE2 WDTYPE1 WDTYPE0	Watchdog timer [N] initiates a reset of type: 0 = Hard reset (default) 1 = Soft reset
End of Table 7-22		

7.6.2.9 Reset Isolation Register (RSISO)

This register is used to select the module clocks that must maintain their clocking without pausing through non power-on reset. Setting any of these bits effectively blocks reset to all PLLCTL registers in order to maintain current values of PLL multiplier, divide ratios and other settings. Along with setting module specific bit in RSISO, the corresponding MDCTLx[12] bit also must be set in PSC to reset isolate a particular module. For more information on MDCTLx register see the *Power Sleep Controller (PSC) for KeyStone Devices User Guide* in "Related Documentation from Texas Instruments" on page 72. The Reset Isolation Register (RSTCTRL) is shown in Figure 7-18 and described in Table 7-23.

Figure 7-18 Reset Isolation Register (RSISO)

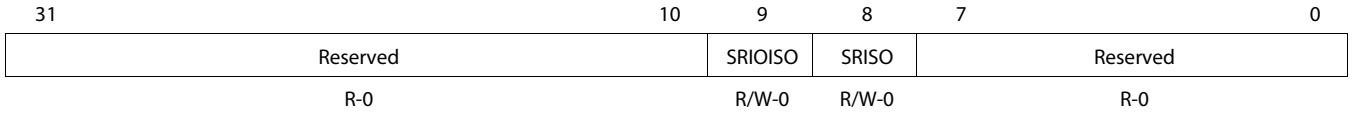

Legend: R = Read only; R/W = Read/Write; -*n* = value after reset

Table 7-23 Reset Isolation Register (RSISO) Field Descriptions

Bit	Field	Description
31-10	Reserved	Reserved.
9	SRIOISO	Isolate SRIO module 0 = Not reset isolated 1 = Reset Isolated
8	SRISO	Isolate SmartReflex 0 = Not reset isolated 1 = Reset Isolated
7-0	Reserved	Reserved.
End of Table 7-23		

Note—The boot ROM code will enable the reset isolation for both SRIO and SmartReflex modules during boot with the Reset Isolation Register. It is up to the user application to disable.

7.6.3 Main PLL Control Register

The Main PLL uses two chip-level registers (MAINPLLCTL0 and MAINPLLCTL1) along with the PLL Controller for its configuration. These MMRs exist inside the Bootcfg space. To write to these registers, software should go through an un-locking sequence using KICK0/KICK1 registers. For valid configurable values into the MAINPLLCTL0 and MAINPLLCTL1 registers see Section 2.5.4 "PLL Boot Configuration Settings" on page 38. See section 3.3.4 "Kicker Mechanism Register (KICK0 and KICK1)" on page 80 for the address location of the registers and locking and unlocking sequences for accessing the registers. The registers are reset on $\overline{\text{POR}}$ only.

Figure 7-19 Main PLL Control Register 0 (MAINPLLCTL0)

31–24	23–19	18–12	11–6	5–0
BWADJ[7:0]	Reserved	PLLM[12:6]	Reserved	PLLD
RW-0000 0101	RW-0000 0	RW-0000000	RW-000000	RW-000000

Legend: RW = Read/Write; *-n* = value after reset

Table 7-24 Main PLL Control Register 0 (MAINPLLCTL0) Field Descriptions

Bit	Field	Description
31-24	BWADJ[7:0]	BWADJ[11:8] and BWADJ[7:0] are located in MAINPLLCTL0 and MAINPLLCTL1 registers. The combination (BWADJ[11:0]) should be programmed to a value related to PLLM[12:0] value based on the equation: BWADJ = ((PLLM+1)>>1) - 1
23-19	Reserved	Reserved
18-12	PLLM[12:6]	A 13-bit bus that selects the values for the multiplication factor (see Note— below)
11-6	Reserved	Reserved
5-0	PLLD	A 6-bit bus that selects the values for the reference divider
End of Table 7-24		

Figure 7-20 Main PLL Control Register 1 (MAINPLLCTL1)

31–7	6	5–4	3–0
Reserved	ENSAT	Reserved	BWADJ[11:8]
RW-00000000000000000000000000	RW-0	RW-00	RW-0000

Legend: RW = Read/Write; *-n* = value after reset

Table 7-25 Main PLL Control Register 1 (MAINPLLCTL1) Field Descriptions

Bit	Field	Description
31-7	Reserved	Reserved
6	ENSAT	Must be set to 1 for proper operation of PLL
5-4	Reserved	Reserved
3-0	BWADJ[11:8]	BWADJ[11:8] and BWADJ[7:0] are located in MAINPLLCTL0 and MAINPLLCTL1 registers. The combination (BWADJ[11:0]) should be programmed to a value related to PLLM[12:0] value based on the equation: BWADJ = ((PLLM+1)>>1) - 1
End of Table 7-25		

Copyright 2014 Texas Instruments Incorporated

Note—PLLM[5:0] bits of the multiplier is controlled by the PLLM register inside the PLL Controller and PLLM[12:6] bits are controlled by the MAINPLLCTL0 chip-level register. The MAINPLLCTL0 register PLLM[12:6] bits should be written just before writing to the PLLM register PLLM[5:0] bits in the controller to have the complete 13 bit value latched when the GO operation is initiated in the PLL controller. See the *Phase Locked Loop (PLL) for KeyStone Devices User Guide* in "Related Documentation from Texas Instruments" on page 72 for the recommended programming sequence. Output divide ratio and Bypass enable/disable of the Main PLL is controlled by the SECCTL register in the PLL Controller. See the 7.6.2.1 "PLL Secondary Control Register (SECCTL)" for more details.

7.6.4 Main PLL and PLL Controller Initialization Sequence

See the *Phase Locked Loop (PLL) for KeyStone Devices User Guide* in "Related Documentation from Texas Instruments" on page 72 for details on the initialization sequence for Main PLL and PLL Controller.

7.6.5 Main PLL Controller/SRIO/HyperLink/PCIe Clock Input Electrical Data/Timing

Table 7-26 Main PLL Controller/SRIO/HyperLink/PCIe Clock Input Timing Requirements (1) (Sheet 1 of 2)
(see Figure 7-21 and Figure 7-22)

No.			Min	Max	Unit
		CORECLK[P:N]			
1	tc(CORCLKN)	Cycle time _ CORECLKN cycle time	3.2	25	ns
1	tc(CORECLKP)	Cycle time _ CORECLKP cycle time	3.2	25	ns
3	tw(CORECLKN)	Pulse width _ CORECLKN high	0.45*tc(CORECLKN)	0.55*tc(CORECLKN)	ns
2	tw(CORECLKN)	Pulse width _ CORECLKN low	0.45*tc(CORECLKN)	0.55*tc(CORECLKN)	ns
2	tw(CORECLKP)	Pulse width _ CORECLKP high	0.45*tc(CORECLKP)	0.55*tc(CORECLKP)	ns
3	tw(CORECLKP)	Pulse width _ CORECLKP low	0.45*tc(CORECLKP)	0.55*tc(CORECLKP)	ns
4	tr(CORECLK_250mv)	Transition time _ CORECLK differential rise time (250mV)	50	350	ps
4	tf(CORECLK_250mv)	Transition time _ CORECLK differential fall time (250mV)	50	350	ps
5	tj(CORECLKN)	Jitter, peak_to_peak _ periodic CORECLKN		0.02*tc(CORECLKN)	ps
5	tj(CORECLKP)	Jitter, peak_to_peak _ periodic CORECLKP		0.02*tc(CORECLKP)	ps
		SRIOSGMIICLK[P:N]			
1	tc(SRIOSGMIICLKN)	Cycle time _ SRIOSGMIICLKN cycle time	3.2 or 4 or 6.4		ns
1	tc(SRIOSGMIICLKP)	Cycle time _ SRIOSGMIICLKP cycle time	3.2 or 4 or 6.4		ns
3	tw(SRIOSGMIICLKN)	Pulse width _ SRIOSGMIICLKN high	0.45*tc(SRIOSGMIICLKN)	0.55*tc(SRIOSGMIICLKN)	ns
2	tw(SRIOSGMIICLKN)	Pulse width _ SRIOSGMIICLKN low	0.45*tc(SRIOSGMIICLKN)	0.55*tc(SRIOSGMIICLKN)	ns
2	tw(SRIOSGMIICLKP)	Pulse width _ SRIOSGMIICLKP high	0.45*tc(SRIOSGMIICLKP)	0.55*tc(SRIOSGMIICLKP)	ns
3	tw(SRIOSGMIICLKP)	Pulse width _ SRIOSGMIICLKP low	0.45*tc(SRIOSGMIICLKP)	0.55*tc(SRIOSGMIICLKP)	ns
4	tr(SRIOSGMIICLK_ 250mv)	Transition time _ SRIOSGMIICLK differential rise time (250 mV)	50	350	ps
4	tf(SRIOSGMIICLK_ 250mv)	Transition time _ SRIOSGMIICLK differential fall time (250 mV)	50	350	ps
5	tj(SRIOSGMIICLKN)	Jitter, peak_to_peak _ periodic SRIOSGMIICLKN		4 (2)	ps,RMS
5	tj(SRIOSGMIICLKP)	Jitter, peak_to_peak _ periodic SRIOSGMIICLKP		4 (2)	ps,RMS
5	tj(SRIOSGMIICLKN)	Jitter, peak_to_peak _ periodic SRIOSGMIICLKN (SRIO not used)		8 (2)	ps,RMS
5	tj(SRIOSGMIICLKP)	Jitter, peak_to_peak _ periodic SRIOSGMIICLKP (SRIO not used)		8 (2)	ps,RMS

Copyright 2014 Texas Instruments Incorporated

Table 7-26 Main PLL Controller/SRIO/HyperLink/PCIe Clock Input Timing Requirements [1] (Sheet 2 of 2)
(see Figure 7-21 and Figure 7-22)

No.			Min	Max	Unit
		HyperLinkCLK[P:N]			
1	tc(MCMCLKN)	Cycle time _ MCMCLKN cycle time	3.2 or 4 or 6.4		ns
1	tc(MCMCLKP)	Cycle time _ MCMCLKP cycle time	3.2 or 4 or 6.4		ns
3	tw(MCMCLKN)	Pulse width _ MCMCLKN high	0.45*tc(MCMCLKN)	0.55*tc(MCMCLKN)	ns
2	tw(MCMCLKN)	Pulse width _ MCMCLKN low	0.45*tc(MCMCLKN)	0.55*tc(MCMCLKN)	ns
2	tw(MCMCLKP)	Pulse width _ MCMCLKP high	0.45*tc(MCMCLKP)	0.55*tc(MCMCLKP)	ns
3	tw(MCMCLKP)	Pulse width _ MCMCLKP low	0.45*tc(MCMCLKP)	0.55*tc(MCMCLKP)	ns
4	tr(MCMCLK_250mv)	Transition time _ MCMCLK differential rise time (250mV)	50	350	ps
4	tf(MCMCLK_250mv)	Transition time _ MCMCLK differential fall time (250mV)	50	350	ps
5	tj(MCMCLKN)	Jitter, peak_to_peak _ periodic MCMCLKN		4 [2]	ps,RMS
5	tj(MCMCLKP)	Jitter, peak_to_peak _ periodic MCMCLKP		4 [2]	ps,RMS
		PCIECLK[P:N]			
1	tc(PCIECLKN)	Cycle time _ PCIECLKN cycle time	3.2 or 4 or 6.4 or 10		ns
1	tc(PCIECLKP)	Cycle time _ PCIECLKP cycle time	3.2 or 4 or 6.4 or 10		ns
3	tw(PCIECLKN)	Pulse width _ PCIECLKN high	0.45*tc(PCIECLKN)	0.55*tc(PCIECLKN)	ns
2	tw(PCIECLKN)	Pulse width _ PCIECLKN low	0.45*tc(PCIECLKN)	0.55*tc(PCIECLKN)	ns
2	tw(PCIECLKP)	Pulse width _ PCIECLKP high	0.45*tc(PCIECLKP)	0.55*tc(PCIECLKP)	ns
3	tw(PCIECLKP)	Pulse width _ PCIECLKP low	0.45*tc(PCIECLKP)	0.55*tc(PCIECLKP)	ns
4	tr(PCIECLK_250mv)	Transition time _ PCIECLK differential rise time (250 mV)	50	350	ps
4	tf(PCIECLK_250mv)	Transition time _ PCIECLK differential fall time (250 mV)	50	350	ps
5	tj(PCIECLKN)	Jitter, peak_to_peak _ periodic PCIECLKN		4 [2]	ps,RMS
5	tj(PCIECLKP)	Jitter, peak_to_peak _ periodic PCIECLKP		4 [2]	ps,RMS
End of Table 7-26					

1 See the *Hardware Design Guide for KeyStone I Devices* in "Related Documentation from Texas Instruments" on page 72 for detailed recommendations.
2 The jitter frequency mask shown in the Hardware Design Guide for KeyStone Devices in "Related Documentation from Texas Instruments" on page 72 must also be met for the specific operating mode chosen.

Figure 7-21 Main PLL Controller/SRIO/HyperLink/PCIe Clock Input Timing

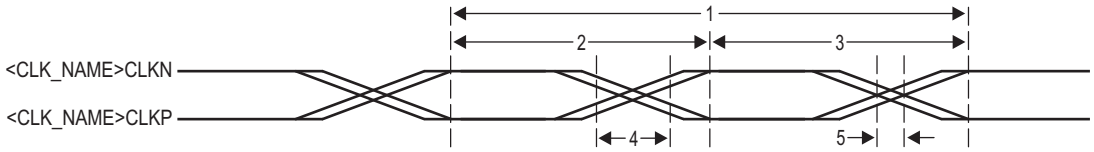

Figure 7-22 Main PLL Clock Input Transition Time

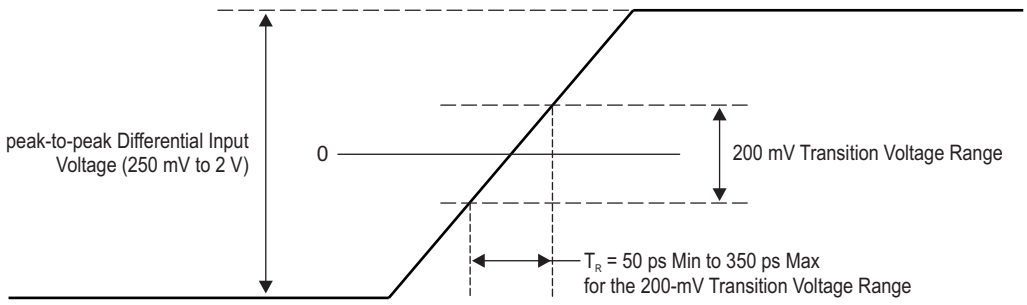

Copyright 2014 Texas Instruments Incorporated

7.7 DD3 PLL

The DDR3 PLL generates interface clocks for the DDR3 memory controller. When coming out of power-on reset, the DDR3 PLL is programmed to a valid frequency during the boot config before being enabled and used.

DDR3 PLL power is supplied externally via the DDR3 PLL power-supply pin (AVDDA2). An external EMI filter circuit must be added to all PLL supplies. See the *Hardware Design Guide for KeyStone I Devices* in "Related Documentation from Texas Instruments" on page 72. For the best performance, TI recommends that all the PLL external components be on a single side of the board without jumpers, switches, or components other than those shown. For reduced PLL jitter, maximize the spacing between switching signal traces and the PLL external components (C1, C2, and the EMI filter).

Figure 7-23 shows the DDR3 PLL.

Figure 7-23 DDR3 PLL Block Diagram

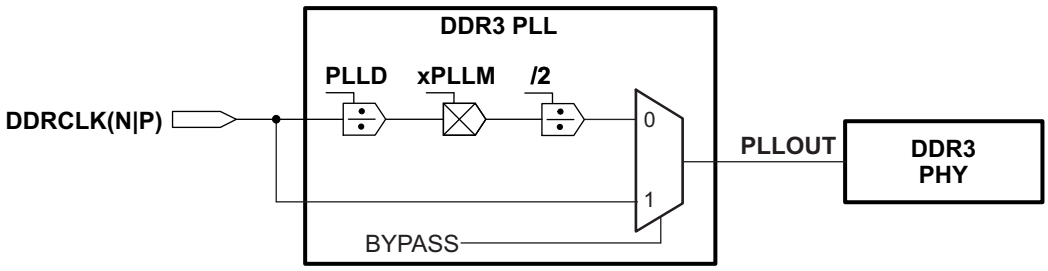

7.7.1 DDR3 PLL Control Register

The DDR3 PLL, which is used to drive the DDR PHY for the EMIF, does not use a PLL controller. DDR3 PLL can be controlled using the DDR3PLLCTL0 and DDR3PLLCTL1 registers located in the Bootcfg module. These MMRs (memory-mapped registers) exist inside the Bootcfg space. To write to these registers, software should go through an un-locking sequence using KICK0/KICK1 registers. For suggested configurable values see 2.5.4 "PLL Boot Configuration Settings" on page 38. See section 3.3.4 "Kicker Mechanism Register (KICK0 and KICK1)" on page 80 for the address location of the registers and locking and unlocking sequences for accessing the registers. This register is reset on $\overline{\text{POR}}$ only.

Figure 7-24 DDR3 PLL Control Register 0 (DDR3PLLCTL0) [1]

31 — 24	23	22 — 19	18 — 6	5 — 0
BWADJ[7:0]	BYPASS	Reserved	PLLM	PLLD
RW-0000 1001	RW-0	RW-0001	RW-0000000010011	RW-000000

Legend: RW = Read/Write; -*n* = value after reset

1 This register is reset on $\overline{\text{POR}}$ only. The regreset, reset, and bgreset from PLL are all tied to a common pll0_ctrl_rst_n The pwrdn, regpwrdn, bgpwrdn are all tied to common pll0_ctrl_to_pll_pwrdn.

Table 7-27 DDR3 PLL Control Register 0 Field Descriptions (Sheet 1 of 2)

Bit	Field	Description
31-24	BWADJ[7:0]	BWADJ[11:8] and BWADJ[7:0] are located in DDR3PLLCTL0 and DDR3PLLCTL1 registers. The combination (BWADJ[11:0]) should be programmed to a value related to PLLM[12:0] value based on the equation: BWADJ = ((PLLM+1)>>1) - 1
23	BYPASS	Enable bypass mode 0 = Bypass disabled 1 = Bypass enabled
22-19	Reserved	Reserved

Table 7-27 DDR3 PLL Control Register 0 Field Descriptions (Sheet 2 of 2)

Bit	Field	Description
18-6	PLLM	A 13-bit bus that selects the values for the multiplication factor
5-0	PLLD	A 6-bit bus that selects the values for the reference divider
End of Table 7-27		

Figure 7-25 DDR3 PLL Control Register 1 (DDR3PLLCTL1)

31 14	13	12 7	6	5 4	3 0
Reserved	PLLRST	Reserved	ENSAT	Reserved	BWADJ[11:8]
RW-00000000000000000	RW-0	RW-000000	RW-0	R-0	RW-0000

Legend: RW = Read/Write; -*n* = value after reset

Table 7-28 DDR3 PLL Control Register 1 Field Descriptions

Bit	Field	Description
31-14	Reserved	Reserved
13	PLLRST	PLL reset bit. 0 = PLL reset is released. 1 = PLL reset is asserted.
12-7	Reserved	Reserved
6	ENSAT	Must be set to 1 for proper operation of PLL
5-4	Reserved	Reserved
3-0	BWADJ[11:8]	BWADJ[11:8] and BWADJ[7:0] are located in DDR3PLLCTL0 and DDR3PLLCTL1 registers. The combination (BWADJ[11:0]) should be programmed to a value related to PLLM[12:0] value based on the equation: BWADJ = ((PLLM+1)>>1) - 1
End of Table 7-28		

7.7.2 DDR3 PLL Device-Specific Information

As shown in Figure 7-23, the output of DDR3 PLL (PLLOUT) is divided by 2 and directly fed to the DDR3 memory controller. The DDR3 PLL is affected by power-on reset. During power-on resets, the internal clocks of the DDR3 PLL are affected as described in Section 7.5 "Reset Controller" on page 133. DDR3 PLL is unlocked only during the power-up sequence and is locked by the time the RESETSTAT pin goes high. It does not lose lock during any of the other resets.

7.7.3 DDR3 PLL Initialization Sequence

See the *Phase Locked Loop (PLL) for KeyStone Devices User Guide* in "Related Documentation from Texas Instruments" on page 72 for details on the initialization sequence for DDR3 PLL.

Note—The DDR3 interface must reset every time the DDR3 PLL is re-programmed.

Copyright 2014 Texas Instruments Incorporated

7.7.4 DDR3 PLL Input Clock Electrical Data/Timing

Table 7-29 DDR3 PLL DDRSYSCLK1(N|P) Timing Requirements
(see Figure 7-26 and Figure 7-22)

No.			Min	Max	Unit
DDRCLK[P:N]					
1	tc(DDRCLKN)	Cycle time _ DDRCLKN cycle time	3.2	25	ns
1	tc(DDRCLKP)	Cycle time _ DDRCLKP cycle time	3.2	25	ns
3	tw(DDRCLKN)	Pulse width _ DDRCLKN high	0.45*tc(DDRCLKN)	0.55*tc(DDRCLKN)	ns
2	tw(DDRCLKN)	Pulse width _ DDRCLKN low	0.45*tc(DDRCLKN)	0.55*tc(DDRCLKN)	ns
2	tw(DDRCLKP)	Pulse width _ DDRCLKP high	0.45*tc(DDRCLKP)	0.55*tc(DDRCLKP)	ns
3	tw(DDRCLKP)	Pulse width _ DDRCLKP low	0.45*tc(DDRCLKP)	0.55*tc(DDRCLKP)	ns
4	tr(DDRCLK_250mv)	Transition time _ DDRCLK differential rise time (250 mV)	50	350	ps
4	tf(DDRCLK_250mv)	Transition time _ DDRCLK differential fall time (250 mV)	50	350	ps
5	tj(DDRCLKN)	Jitter, peak_to_peak _ periodic DDRCLKN		0.02*tc(DDRCLKN)	ps
5	tj(DDRCLKP)	Jitter, peak_to_peak _ periodic DDRCLKP		0.02*tc(DDRCLKP)	ps
End of Table 7-29					

Figure 7-26 DDR3 PLL DDRCLK Timing

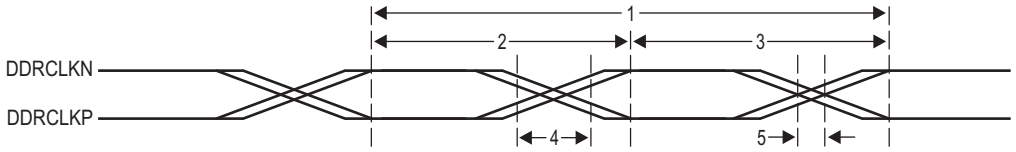

7.8 PASS PLL

The PASS PLL generates interface clocks for the Network Coprocessor. Using the PACLKSEL pin the user can select the input source of PASS PLL as either the output of CORECLK clock reference sources or the PASSCLK clock reference sources. When coming out of power-on reset, PASS PLL comes out in a bypass mode and must be programmed to a valid frequency before being enabled and used.

PASS PLL power is supplied via the PASS PLL power-supply pin (AVDDA3). An external EMI filter circuit must be added to all PLL supplies. See the *Hardware Design Guide for KeyStone I Devices* in "Related Documentation from Texas Instruments" on page 72. for detailed recommendations. For the best performance, TI recommends that all the PLL external components be on a single side of the board without jumpers, switches, or components other than those shown. For reduced PLL jitter, maximize the spacing between switching signal traces and the PLL external components (C1, C2, and the EMI Filter).

Figure 7-27 shows the PASS PLL.

Figure 7-27 PASS PLL Block Diagram

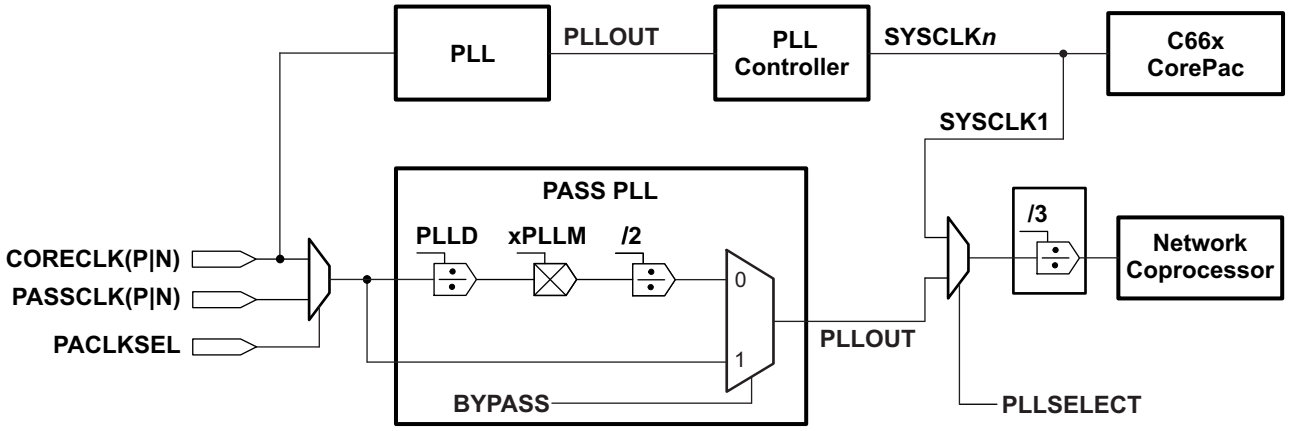

7.8.1 PASS PLL Control Register

The PASS PLL, which is used to drive the Network Coprocessor, does not use a PLL controller. The PASS PLL can be controlled using the PASSPLLCTL0 and PASSPLLCTL1 registers located in Bootcfg module. These MMRs (memory-mapped registers) exist inside the Bootcfg space. To write to these registers, software should go through an un-locking sequence using KICK0/KICK1 registers. For suggested configurable values see 2.5.4 "PLL Boot Configuration Settings" on page 38. See section 3.3.4 "Kicker Mechanism Register (KICK0 and KICK1)" on page 80 for the address location of the registers and locking and unlocking sequences for accessing the registers. This register is reset on $\overline{\text{POR}}$ only.

Figure 7-28 PASS PLL Control Register 0 (PASSPLLCTL0) [1]

31 — 24	23	22 — 19	18 — 6	5 — 0
BWADJ[7:0]	BYPASS	Reserved	PLLM	PLLD
RW-0000 1001	RW-0	RW-0001	RW-0000000010011	RW-000000

Legend: RW = Read/Write; *-n* = value after reset

1 This register is Reset on $\overline{\text{POR}}$ only. The regreset, reset and bgreset from PLL are all tied to a common pll0_ctrl_rst_n The pwrdn, regpwrdn, bgpwrdn are all tied to common pll0_ctrl_to_pll_pwrdn.

Copyright 2014 Texas Instruments Incorporated

Table 7-30 PASS PLL Control Register 0 Field Descriptions

Bit	Field	Description
31-24	BWADJ[7:0]	BWADJ[11:8] and BWADJ[7:0] are located in PASSPLLCTL0 and PASSPLLCTL1 registers. The combination (BWADJ[11:0]) should be programmed to a value related to PLLM[12:0] value based on the equation: BWADJ = ((PLLM+1)>>1) - 1
23	BYPASS	Enable bypass mode 0 = Bypass disabled 1 = Bypass enabled
22-19	Reserved	Reserved
18-6	PLLM	A 13-bit bus that selects the values for the multiplication factor
5-0	PLLD	A 6-bit bus that selects the values for the reference divider
End of Table 7-30		

Figure 7-29 PASS PLL Control Register 1 (PASSPLLCTL1)

31 15	14	13	12 7	6	5 4	3 0
Reserved	PLLRST	PLLSELECT	Reserved	ENSAT	Reserved	BWADJ[11:8]
RW-00000000000000000	RW-0	RW-0	RW-000000	RW-0	R-0	RW-0000

Legend: RW = Read/Write; *-n* = value after reset

Table 7-31 PASS PLL Control Register 1 Field Descriptions

Bit	Field	Description
31-15	Reserved	Reserved
14	PLLRST	PLL reset bit. 0 = PLL reset is released 1 = PLL reset is asserted
13	PLLSELECT	PASS PLL select bit. Note that this bit must be set before the Ethernet subsystem is configured and used. 0 = Reserved 1 = PASS PLL output clock is used as the input to PASS
12-7	Reserved	Reserved
6	ENSAT	Must be set to 1 for proper operation of the PLL
5-4	Reserved	Reserved
3-0	BWADJ[11:8]	BWADJ[11:8] and BWADJ[7:0] are located in PASSPLLCTL0 and PASSPLLCTL1 registers. The combination (BWADJ[11:0]) should be programmed to a value related to PLLM[12:0] value based on the equation: BWADJ = ((PLLM+1)>>1) - 1
End of Table 7-31		

7.8.2 PASS PLL Device-Specific Information

As shown in Figure 7-27, the output of PASS PLL (PLLOUT) is divided by 2 and directly fed to the Network Coprocessor. The PASS PLL is affected by power-on reset. During power-on resets, the internal clocks of the PASS PLL are affected as described in Section 7.5 "Reset Controller" on page 133. The PASS PLL is unlocked only during the power-up sequence and is locked by the time the $\overline{\text{RESETSTAT}}$ pin goes high. It does not lose lock during any of the other resets.

7.8.3 PASS PLL Initialization Sequence

See the *Phase Locked Loop (PLL) for KeyStone Devices User Guide* in "Related Documentation from Texas Instruments" on page 72 for details on the initialization sequence for PASS PLL.

7.8.4 PASS PLL Input Clock Electrical Data/Timing

Table 7-32 PASS PLL Timing Requirements
(See Figure 7-30 and Figure 7-22)

No.			Min	Max	Unit
PASSCLK[P:N]					
1	tc(PASSCLKN)	Cycle Time _ PASSCLKN cycle time	3.2	25	ns
1	tc(PASSCLKP)	Cycle Time _ PASSCLKP cycle time	3.2	25	ns
3	tw(PASSCLKN)	Pulse Width _ PASSCLKN high	0.45*tc(PASSCLKN)	0.55*tc(PASSCLKN)	ns
2	tw(PASSCLKN)	Pulse Width _ PASSCLKN low	0.45*tc(PASSCLKN)	0.55*tc(PASSCLKN)	ns
2	tw(PASSCLKP)	Pulse Width _ PASSCLKP high	0.45*tc(PASSCLKP)	0.55*tc(PASSCLKP)	ns
3	tw(PASSCLKP)	Pulse Width _ PASSCLKP low	0.45*tc(PASSCLKP)	0.55*tc(PASSCLKP)	ns
4	tr(PASSCLK_250mv)	Transition time _ PASSCLK differential rise time (250 mV)	50	350	ps
4	tf(PASSCLK_250mv)	Transition time _ PASSCLK differential fall time (250 mV)	50	350	ps
5	tj(PASSCLKN)	Jitter, peak_to_peak _ periodic PASSCLKN		0.02*tc(PASSCLKN)	ps, pk-pk
5	tj(PASSCLKP)	Jitter, peak_to_peak _ periodic PASSCLKP		0.02*tc(PASSCLKP)	ps, pk-pk

Figure 7-30 PASS PLL Timing

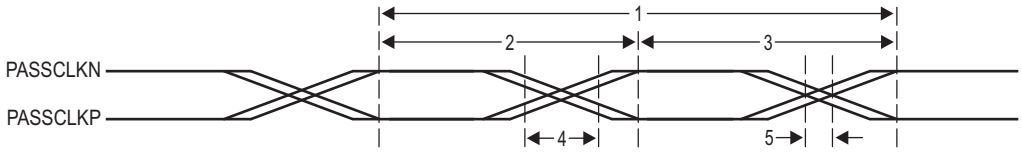

Copyright 2014 Texas Instruments Incorporated

7.9 Enhanced Direct Memory Access (EDMA3) Controller

The primary purpose of the EDMA3 is to service user-programmed data transfers between two memory-mapped slave endpoints on the device. The EDMA3 services software-driven paging transfers (e.g., data movement between external memory and internal memory), performs sorting or subframe extraction of various data structures, services event driven peripherals, and offloads data transfers from the device CPU.

There are 3 EDMA Channel Controllers on the C6678 DSP, EDMA3CC0, EDMA3CC1, and EDMA3CC2.

- EDMA3CC0 has two transfer controllers: EDMA3TC1 and EDMA3TC2.
- EDMA3CC1 has four transfer controllers: EDMA3TC0, EDMA3TC1, EDMA3TC2, and EDMA3TC3.
- EDMA3CC2 has four transfer controllers: EDMA3TC0, EDMA3TC1, EDMA3TC2, and EDMA3TC3.

In the context of this document, EDMA3TCx associated with EDMA3CCy, and is referred to as EDMA3CCy TCx. Each of the transfer controllers has a direct connection to the switch fabric. Section 4.2 "Switch Fabric Connections" lists the peripherals that can be accessed by the transfer controllers.

EDMA3CC0 is optimized to be used for transfers to/from/within the MSMC and DDR-3 subsytems. The others are to be used for the remaining traffic.

Each EDMA3 Channel Controller includes the following features:

- Fully orthogonal transfer description
  - Three transfer dimensions:
    - Array (multiple bytes)
    - Frame (multiple arrays)
    - Block (multiple frames)
  - Single event can trigger transfer of array, frame, or entire block
  - Independent indexes on source and destination
- Flexible transfer definition:
  - Increment or FIFO transfer addressing modes
  - Linking mechanism allows for ping-pong buffering, circular buffering, and repetitive/continuous transfers, all with no CPU intervention
  - Chaining allows multiple transfers to execute with one event
- 128 PaRAM entries for EDMA3CC0, 512 each for EDMA3CC1 and EDMA3CC2
  - Used to define transfer context for channels
  - Each PaRAM entry can be used as a DMA entry, QDMA entry, or link entry
- 16 DMA channels for EDMA3CC0, 64 each for EDMA3CC1 and EDMA3CC2
  - Manually triggered (CPU writes to channel controller register), external event triggered, and chain triggered (completion of one transfer triggers another)
- 8 Quick DMA (QDMA) channels per EDMA 3 Channel Controller
  - Used for software-driven transfers
  - Triggered upon writing to a single PaRAM set entry
- Two transfer controllers and two event queues with programmable system-level priority for EDMA3CC0, four transfer controllers and four event queues with programmable system-level priority per channel controller for EDMA3CC1 and EDMA3CC2
- Interrupt generation for transfer completion and error conditions

- Debug visibility
  - Queue watermarking/threshold allows detection of maximum usage of event queues
  - Error and status recording to facilitate debug

7.9.1 EDMA3 Device-Specific Information

The EDMA supports two addressing modes: constant addressing and increment addressing mode. Constant addressing mode is applicable to a very limited set of use cases. For most applications, increment mode must be used. For more information on these two addressing modes, see the *Enhanced Direct Memory Access 3 (EDMA3) Controller for KeyStone Devices User Guide* in "Related Documentation from Texas Instruments" on page 72.

For the range of memory addresses that include EDMA3 channel controller (EDMA3CC) control registers and EDMA3 transfer controller (EDMA3TC) control register see Section Table 2-2"Memory Map Summary" on page 17. For memory offsets and other details on EDMA3CC and EDMA3TC control registers entries, see the *Enhanced Direct Memory Access 3 (EDMA3) Controller for KeyStone Devices User Guide* in "Related Documentation from Texas Instruments" on page 72.

7.9.2 EDMA3 Channel Controller Configuration

Table 7-33 shows the configuration for each of the EDMA3 channel controllers present on the device.

Table 7-33 EDMA3 Channel Controller Configuration

Description	EDMA3 CC0	EDMA3 CC1	EDMA3 CC2
Number of DMA channels in Channel Controller	16	64	64
Number of QDMA channels	8	8	8
Number of interrupt channels	16	64	64
Number of PaRAM set entries	128	512	512
Number of event queues	2	4	4
Number of Transfer Controllers	2	4	4
Memory Protection Existence	Yes	Yes	Yes
Number of Memory Protection and Shadow Regions	8	8	8
End of Table 7-33			

7.9.3 EDMA3 Transfer Controller Configuration

Each transfer controller on a device is designed differently based on considerations like performance requirements, system topology (like main TeraNet bus width, external memory bus width), etc. The parameters that determine the transfer controller configurations are:

- **FIFOSIZE:** Determines the size in bytes for the data FIFO that is the temporary buffer for the in-flight data. The data FIFO is where the read return data read by the TC read controller from the source endpoint is stored and subsequently written out to the destination endpoint by the TC write controller.
- **BUSWIDTH:** The width of the read and write data buses in bytes, for the TC read and write controller, respectively. This is typically equal to the bus width of the main TeraNet interface.
- **Default Burst Size (DBS):** The DBS is the maximum number of bytes per read/write command issued by a transfer controller.
- **DSTREGDEPTH:** This determines the number of destination FIFO register set. The number of destination FIFO register set for a transfer controller determines the maximum number of outstanding transfer requests.

All four parameters listed above are fixed by the design of the device.

Table 7-34 shows the configuration for each of the EDMA3 transfer controllers present on the device.

Copyright 2014 Texas Instruments Incorporated

Table 7-34 EDMA3 Transfer Controller Configuration

Parameter	EDMA3 CC0		EDMA3 CC1				EDMA3 CC2			
	TC0	TC1	TC0	TC1	TC2	TC3	TC0	TC1	TC2	TC3
FIFOSIZE	1024 bytes	1024 bytes	1024 bytes	512 bytes	1024 bytes	512 bytes	1024 bytes	512 bytes	512 bytes	1024 bytes
BUSWIDTH	32 bytes	32 bytes	16 bytes	16 bytes	16 bytes	16 bytes	16 bytes	16 bytes	16 bytes	16 bytes
DSTREGDEPTH	4 entries	4 entries	4 entries	4 entries	4 entries	4 entries	4 entries	4 entries	4 entries	4 entries
DBS	128 bytes	128 bytes	128 bytes	64 bytes	128 bytes	64 bytes	128 bytes	64 bytes	64 bytes	128 bytes
End of Table 7-34										

7.9.4 EDMA3 Channel Synchronization Events

The EDMA3 supports up to 16 DMA channels for EDMA3CC0, 64 each for EDMA3CC1 and EDMA3CC2 that can be used to service system peripherals and to move data between system memories. DMA channels can be triggered by synchronization events generated by system peripherals. The following tables lists the source of the synchronization event associated with each of the EDMA EDMA3CC DMA channels. On the C6678, the association of each synchronization event and DMA channel is fixed and cannot be reprogrammed.

For more detailed information on the EDMA3 module and how EDMA3 events are enabled, captured, processed, prioritized, linked, chained, and cleared, etc., see the *Enhanced Direct Memory Access 3 (EDMA3) Controller for KeyStone Devices User Guide* in "Related Documentation from Texas Instruments" on page 72.

Table 7-35 EDMA3CC0 Events for C6678

Event Number	Event	Event Description
0	TINT8L	Timer interrupt low
1	TINT8H	Timer interrupt high
2	TINT9L	Timer interrupt low
3	TINT9H	Timer interrupt high
4	TINT10L	Timer interrupt low
5	TINT10H	Timer interrupt high
6	TINT11L	Timer interrupt low
7	TINT11H	Timer interrupt high
8	CIC3_OUT0	Interrupt Controller output
9	CIC3_OUT1	Interrupt Controller output
10	CIC3_OUT2	Interrupt Controller output
11	CIC3_OUT3	Interrupt Controller output
12	CIC3_OUT4	Interrupt Controller output
13	CIC3_OUT5	Interrupt Controller output
14	CIC3_OUT6	Interrupt Controller output
15	CIC3_OUT7	Interrupt Controller output
End of Table 7-35		

Table 7-36 EDMA3CC1 Events for C6678 (Sheet 1 of 3)

Event Number	Event	Event Description
0	SPIINT0	SPI interrupt
1	SPIINT1	SPI interrupt
2	SPIXEVT	Transmit event
3	SPIREVT	Receive event

Table 7-36 EDMA3CC1 Events for C6678 (Sheet 2 of 3)

Event Number	Event	Event Description
4	I2CREVT	I2C receive event
5	I2CXEVT	I2C transmit event
6	GPINT0	GPIO interrupt
7	GPINT1	GPIO interrupt
8	GPINT2	GPIO interrupt
9	GPINT3	GPIO interrupt
10	GPINT4	GPIO interrupt
11	GPINT5	GPIO interrupt
12	GPINT6	GPIO interrupt
13	GPINT7	GPIO interrupt
14	SEMINT0	Semaphore interrupt
15	SEMINT1	Semaphore interrupt
16	SEMINT2	Semaphore interrupt
17	SEMINT3	Semaphore interrupt
18	SEMINT4	Semaphore interrupt
19	SEMINT5	Semaphore interrupt
20	SEMINT6	Semaphore interrupt
21	SEMINT7	Semaphore interrupt
22	TINT8L	Timer interrupt low
23	TINT8H	Timer interrupt high
24	TINT9L	Timer interrupt low
25	TINT9H	Timer interrupt high
26	TINT10L	Timer interrupt low
27	TINT10H	Timer interrupt high
28	TINT11L	Timer interrupt low
29	TINT11H	Timer interrupt high
30	TINT12L	Timer interrupt low
31	TINT12H	Timer interrupt high
32	TINT13L	Timer interrupt low
33	TINT13H	Timer interrupt high
34	TINT14L	Timer interrupt low
35	TINT14H	Timer interrupt high
36	TINT15L	Timer interrupt low
37	TINT15L	Timer interrupt high
38	CIC2_OUT44	Interrupt Controller output
39	CIC2_OUT45	Interrupt Controller output
40	CIC2_OUT46	Interrupt Controller output
41	CIC2_OUT47	Interrupt Controller output
42	CIC2_OUT0	Interrupt Controller output
43	CIC2_OUT1	Interrupt Controller output
44	CIC2_OUT2	Interrupt Controller output
45	CIC2_OUT3	Interrupt Controller output
46	CIC2_OUT4	Interrupt Controller output
47	CIC2_OUT5	Interrupt Controller output

Copyright 2014 Texas Instruments Incorporated

Table 7-36 EDMA3CC1 Events for C6678 (Sheet 3 of 3)

Event Number	Event	Event Description
48	CIC2_OUT6	Interrupt Controller output
49	CIC2_OUT7	Interrupt Controller output
50	CIC2_OUT8	Interrupt Controller output
51	CIC2_OUT9	Interrupt Controller output
52	CIC2_OUT10	Interrupt Controller output
53	CIC2_OUT11	Interrupt Controller output
54	CIC2_OUT12	Interrupt Controller output
55	CIC2_OUT13	Interrupt Controller output
56	CIC2_OUT14	Interrupt Controller output
57	CIC2_OUT15	Interrupt Controller output
58	CIC2_OUT16	Interrupt Controller output
59	CIC2_OUT17	Interrupt Controller output
60	CIC2_OUT18	Interrupt Controller output
61	CIC2_OUT19	Interrupt Controller output
62	CIC2_OUT20	Interrupt Controller output
63	CIC2_OUT21	Interrupt Controller output
End of Table 7-36		

Table 7-37 EDMA3CC2 Events for C6678 (Sheet 1 of 2)

Event Number	Event	Event Description
0	SPIINT0	SPI interrupt
1	SPIINT1	SPI interrupt
2	SPIXEVT	Transmit event
3	SPIREVT	Receive event
4	I2CREVT	I2C receive event
5	I2CXEVT	I2C transmit event
6	GPINT0	GPIO interrupt
7	GPINT1	GPIO interrupt
8	GPINT2	GPIO Interrupt
9	GPINT3	GPIO interrupt
10	GPINT4	GPIO interrupt
11	GPINT5	GPIO interrupt
12	GPINT6	GPIO interrupt
13	GPINT7	GPIO interrupt
14	SEMINT0	Semaphore interrupt
15	SEMINT1	Semaphore interrupt
16	SEMINT2	Semaphore interrupt
17	SEMINT3	Semaphore interrupt
18	SEMINT4	Semaphore interrupt
19	SEMINT5	Semaphore interrupt
20	SEMINT6	Semaphore interrupt
21	SEMINT7	Semaphore interrupt
22	TINT8L	Timer interrupt low

Table 7-37 EDMA3CC2 Events for C6678 (Sheet 2 of 2)

Event Number	Event	Event Description
23	TINT8H	Timer interrupt high
24	TINT9L	Timer interrupt low
25	TINT9H	Timer interrupt high
26	TINT10L	Timer interrupt low
27	TINT10H	Timer interrupt high
28	TINT11L	Timer interrupt low
29	TINT11H	Timer interrupt high
30	TINT12L	Timer interrupt low
31	TINT12H	Timer interrupt high
32	TINT13L	Timer interrupt low
33	TINT13H	Timer interrupt high
34	TINT14L	Timer interrupt low
35	TINT14H	Timer interrupt high
36	TINT15L	Timer interrupt low
37	TINT15H	Timer interrupt high
38	CIC2_OUT48	Interrupt Controller output
39	CIC2_OUT49	Interrupt Controller output
40	URXEVT	UART receive event
41	UTXEVT	UART transmit event
42	CIC2_OUT22	Interrupt Controller output
43	CIC2_OUT23	Interrupt Controller output
44	CIC2_OUT24	Interrupt Controller output
45	CIC2_OUT25	Interrupt Controller output
46	CIC2_OUT26	Interrupt Controller output
47	CIC2_OUT27	Interrupt Controller output
48	CIC2_OUT28	Interrupt Controller output
49	CIC2_OUT29	Interrupt Controller output
50	CIC2_OUT30	Interrupt Controller output
51	CIC2_OUT31	Interrupt Controller output
52	CIC2_OUT32	Interrupt Controller output
53	CIC2_OUT33	Interrupt Controller output
54	CIC2_OUT34	Interrupt Controller output
55	CIC2_OUT35	Interrupt Controller output
56	CIC2_OUT36	Interrupt Controller output
57	CIC2_OUT37	Interrupt Controller output
58	CIC2_OUT38	Interrupt Controller output
59	CIC2_OUT39	Interrupt Controller output
60	CIC2_OUT40	Interrupt Controller output
61	CIC2_OUT41	Interrupt Controller output
62	CIC2_OUT42	Interrupt Controller output
63	CIC2_OUT43	Interrupt Controller output
End of Table 7-37		

Copyright 2014 Texas Instruments Incorporated

7.10 Interrupts

7.10.1 Interrupt Sources and Interrupt Controller

The CPU interrupts on the C6678 device are configured through the C66x CorePac Interrupt Controller. The interrupt controller allows for up to 128 system events to be programmed to any of the twelve CPU interrupt inputs (CPUINT4 - CPUINT15), the CPU exception input (EXCEP), or the advanced emulation logic. The 128 system events consist of both internally-generated events (within the CorePac) and chip-level events.

Additional system events are routed to each of the C66x CorePacs to provide chip-level events that are not required as CPU interrupts/exceptions to be routed to the interrupt controller as emulation events. Additionally, error-class events or infrequently used events are also routed through the system event router to offload the C66x CorePac interrupt selector. This is accomplished through chip interrupt controller (CIC) blocks. This is clocked using CPU/6.

The event controllers consist of simple combination logic to provide additional events to each C66x CorePac, plus the EDMA3CC, CIC0, and CIC1 provide 17 additional events as well as 8 broadcast events to each of the C66x CorePacs, CIC2 provides 26 and 24 additional events to EDMA3CC1 and EDMA3CC2 respectively, and CIC3 provides 8 and 32 additional events to EDMA3CC0 and HyperLink respectively.

There are a large number of events at the chip level. The chip level CIC provides a flexible way to combine and remap those events. Multiple events can be combined to a single event through chip level CIC. However, an event can be mapped only to a single event output from the chip level CIC. The chip level CIC also allows the software to trigger system event through memory writes. The broadcast events to C66x CorePacs can be used for synchronization among multiple cores or inter-processor communication purpose and etc. For more details on the CIC features, see the *Chip Interrupt Controller (CIC) for KeyStone Devices User Guide* in "Related Documentation from Texas Instruments" on page 72.

Note—Modules such as MPU, Tracer, and BOOT_CFG have level interrupts and EOI handshaking interface. The EOI value is 0 for MPU, Tracer, and BOOT_CFG.

Figure 7-31 shows the C6678 interrupt topology.

Figure 7-31 TMS320C6678 Interrupt Topology

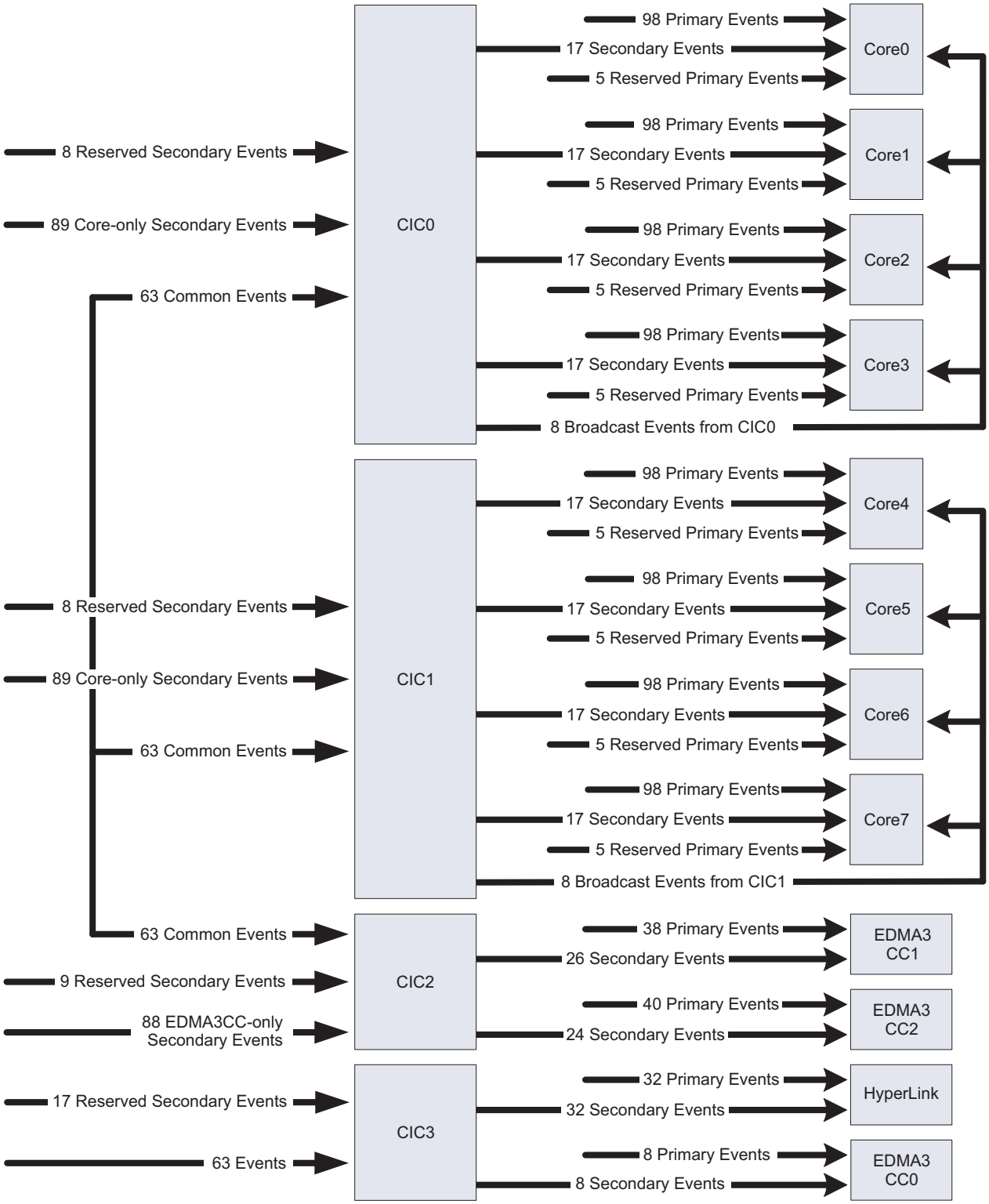

Copyright 2014 Texas Instruments Incorporated

Figure 7-32 shows the mapping of system events. For more information on the Interrupt Controller, see the *C66x DSP CorePac User Guide* in "Related Documentation from Texas Instruments" on page 72.

Figure 7-32 TMS320C6678 System Event Inputs — C66x CorePac Primary Interrupts (Sheet 1 of 4)

Input Event Number	Interrupt Event	Description
0	EVT0	Event combiner 0 output
1	EVT1	Event combiner 1 output
2	EVT2	Event combiner 2 output
3	EVT3	Event combiner 3 output
4	TETBHFULLINTn (1)	TETB is half full
5	TETBFULLINTn (1)	TETB is full
6	TETBACQINTn (1)	Acquisition has been completed
7	TETBOVFLINTn (1)	Overflow condition interrupt
8	TETBUNFLINTn (1)	Underflow condition interrupt
9	EMU_DTDMA	ECM interrupt for: 1. Host scan access 2. DTDMA transfer complete 3. AET interrupt
10	MSMC_mpf_errorn (2)	Memory protection fault indicators for local core
11	EMU_RTDXRX	RTDX receive complete
12	EMU_RTDXTX	RTDX transmit complete
13	IDMA0	IDMA channel 0 interrupt
14	IDMA1	IDMA channel 1 interrupt
15	SEMERRn (3)	Semaphore error interrupt
16	SEMINTn (3)	Semaphore interrupt
17	PCIExpress_MSI_INTn (4)	Message signaled interrupt mode
18	TSIP0_ERRINT[n] (5)	TSIP0 receive/transmit error interrupt
19	TSIP1_ERRINT[n] (5)	TSIP1 receive/transmit error interrupt
20	INTDST(n+16) (6)	SRIO Interrupt
21	CIC0_OUT(32+0+11*n) (7) Or CIC1_OUT(32+0+11*(n-4)) (7)	Interrupt Controller output
22	CIC0_OUT(32+1+11*n) (7) Or CIC1_OUT(32+1+11*(n-4)) (7)	Interrupt Controller output
23	CIC0_OUT(32+2+11*n) (7) Or CIC1_OUT(32+2+11*(n-4)) (7)	Interrupt Controller output
24	CIC0_OUT(32+3+11*n) (7) Or CIC1_OUT(32+3+11*(n-4)) (7)	Interrupt Controller output
25	CIC0_OUT(32+4+11*n) (7) Or CIC1_OUT(32+4+11*(n-4)) (7)	Interrupt Controller output
26	CIC0_OUT(32+5+11*n) (7) Or CIC1_OUT(32+5+11*(n-4)) (7)	Interrupt Controller output
27	CIC0_OUT(32+6+11*n) (7) Or CIC1_OUT(32+6+11*(n-4)) (7)	Interrupt Controller output
28	CIC0_OUT(32+7+11*n) (7) Or CIC1_OUT(32+7+11*(n-4)) (7)	Interrupt Controller output
29	CIC0_OUT(32+8+11*n) (7) Or CIC1_OUT(32+8+11*(n-4)) (7)	Interrupt Controller output
30	CIC0_OUT(32+9+11*n) (7) Or CIC1_OUT(32+9+11*(n-4)) (7)	Interrupt Controller output
31	CIC0_OUT(32+10+11*n) (7) Or CIC1_OUT(32+10+11*(n-4)) (7)	Interrupt Controller output
32	QM_INT_LOW_0	QM Interrupt for 0~31 Queues
33	QM_INT_LOW_1	QM Interrupt for 32~63 Queues
34	QM_INT_LOW_2	QM Interrupt for 64~95 Queues
35	QM_INT_LOW_3	QM Interrupt for 96~127 Queues
36	QM_INT_LOW_4	QM Interrupt for 128~159 Queues
37	QM_INT_LOW_5	QM Interrupt for 160~191 Queues
38	QM_INT_LOW_6	QM Interrupt for 192~223 Queues

Copyright 2014 Texas Instruments Incorporated

Figure 7-32 TMS320C6678 System Event Inputs — C66x CorePac Primary Interrupts (Sheet 2 of 4)

Input Event Number	Interrupt Event	Description
39	QM_INT_LOW_7	QM Interrupt for 224~255 Queues
40	QM_INT_LOW_8	QM Interrupt for 256~287 Queues
41	QM_INT_LOW_9	QM Interrupt for 288~319 Queues
42	QM_INT_LOW_10	QM Interrupt for 320~351 Queues
43	QM_INT_LOW_11	QM Interrupt for 352~383 Queues
44	QM_INT_LOW_12	QM Interrupt for 384~415 Queues
45	QM_INT_LOW_13	QM Interrupt for 416~447 Queues
46	QM_INT_LOW_14	QM Interrupt for 448~479 Queues
47	QM_INT_LOW_15	QM Interrupt for 480~511 Queues
48	QM_INT_HIGH_n (8)	QM Interrupt for Queue 704+n[8]
49	QM_INT_HIGH_(n+8) (8)	QM Interrupt for Queue 712+n[8]
50	QM_INT_HIGH_(n+16) (8)	QM Interrupt for Queue 720+n[8]
51	QM_INT_HIGH_(n+24) (8)	QM Interrupt for Queue 728+n[8]
52	TSIP0_RFSINT[n] (5)	TSIP0 receive frame sync interrupt
53	TSIP0_RSFINT[n] (5)	TSIP0 receive super frame interrupt
54	TSIP0_XFSINT[n] (5)	TSIP0 transmit frame sync interrupt
55	TSIP0_XSFINT[n] (5)	TSIP0 transmit super frame interrupt
56	TSIP1_RFSINT[n] (5)	TSIP1 receive frame sync interrupt
57	TSIP1_RSFINT[n] (5)	TSIP1 receive super frame interrupt
58	TSIP1_XFSINT[n] (5)	TSIP1 transmit frame sync interrupt
59	TSIP1_XSFINT[n] (5)	TSIP1 transmit super frame interrupt
60	Reserved	
61	Reserved	
62	CIC0_OUT(2+8*n)[7] Or CIC1_OUT(2+8*(n-4))[7]	Interrupt Controller output
63	CIC0_OUT(3+8*n)[7] Or CIC1_OUT(3+8*(n-4))[7]	Interrupt Controller output
64	TINTLn (9)	Local timer interrupt low
65	TINTHn (9)	Local timer interrupt high
66	TINT8L	Timer interrupt low
67	TINT8H	Timer interrupt high
68	TINT9L	Timer interrupt low
69	TINT9H	Timer interrupt high
70	TINT10L	Timer interrupt low
71	TINT10H	Timer interrupt high
72	TINT11L	Timer interrupt low
73	TINT11H	Timer interrupt high
74	TINT12L	Timer interrupt low
75	TINT12H	Timer interrupt high
76	TINT13L	Timer interrupt low
77	TINT13H	Timer interrupt high
78	TINT14L	Timer interrupt low
79	TINT14H	Timer interrupt high
80	TINT15L	Timer interrupt low
81	TINT15H	Timer interrupt high
82	GPINT8	Local GPIO interrupt

Copyright 2014 Texas Instruments Incorporated

Figure 7-32 TMS320C6678 System Event Inputs — C66x CorePac Primary Interrupts (Sheet 3 of 4)

Input Event Number	Interrupt Event	Description
83	GPINT9	Local GPIO interrupt
84	GPINT10	Local GPIO interrupt
85	GPINT11	Local GPIO interrupt
86	GPINT12	Local GPIO interrupt
87	GPINT13	Local GPIO interrupt
88	GPINT14	Local GPIO interrupt
89	GPINT15	Local GPIO interrupt
90	GPINTn (10)	Local GPIO interrupt
91	IPC_LOCAL	Inter DSP interrupt from IPCGRn
92	CIC0_OUT(4+8*n) (7) Or CIC1_OUT(4+8*(n-4)) (7)	Interrupt Controller output
93	CIC0_OUT(5+8*n) (7) Or CIC1_OUT(5+8*(n-4)) (7)	Interrupt Controller output
94	CIC0_OUT(6+8*n) (7) Or CIC1_OUT(6+8*(n-4)) (7)	Interrupt Controller output
95	CIC0_OUT(7+8*n) (7) Or CIC1_OUT(7+8*(n-4)) (7)	Interrupt Controller output
96	INTERR	Dropped CPU interrupt event
97	EMC_IDMAERR	Invalid IDMA parameters
98	Reserved	
99	Reserved	
100	EFIINTA	EFI Interrupt from side A
101	EFIINTB	EFI Interrupt from side B
102	CIC0_OUT0 or CIC1_OUT0	Interrupt Controller output
103	CIC0_OUT1 or CIC1_OUT1	Interrupt Controller output
104	CIC0_OUT8 or CIC1_OUT8	Interrupt Controller output
105	CIC0_OUT9 or CIC1_OUT9	Interrupt Controller output
106	CIC0_OUT16 or CIC1_OUT16	Interrupt Controller output
107	CIC0_OUT17 or CIC1_OUT17	Interrupt Controller output
108	CIC0_OUT24 or CIC1_OUT24	Interrupt Controller output
109	CIC0_OUT25 or CIC1_OUT25	Interrupt Controller output
110	MDMAERREVT	VbusM error event
111	Reserved	
112	EDMA3CC0_EDMACC_AETEVT	EDMA3CC0 AET event
113	PMC_ED	Single bit error detected during DMA read
114	EDMA3CC1_EDMACC_AETEVT	EDMA3CC1 AET Event
115	EDMA3CC2_EDMACC_AETEVT	EDMA3CC2 AET Event
116	UMC_ED1	Corrected bit error detected
117	UMC_ED2	Uncorrected bit error detected
118	PDC_INT	Power down sleep interrupt
119	SYS_CMPA	SYS CPU memory protection fault event
120	PMC_CMPA	PMC CPU memory protection fault event
121	PMC_DMPA	PMC DMA memory protection fault event
122	DMC_CMPA	DMC CPU memory protection fault event
123	DMC_DMPA	DMC DMA memory protection fault event
124	UMC_CMPA	UMC CPU memory protection fault event
125	UMC_DMPA	UMC DMA memory protection fault event

Copyright 2014 Texas Instruments Incorporated

Figure 7-32 TMS320C6678 System Event Inputs — C66x CorePac Primary Interrupts (Sheet 4 of 4)

Input Event Number	Interrupt Event	Description
126	EMC_CMPA	EMC CPU memory protection fault event
127	EMC_BUSERR	EMC bus error interrupt
End of Table 7-37		

1 CorePac[n] will receive TETBHFULLINTn, TETBFULLINTn, TETBACQINTn, TETBOVFLINTn, and TETBUNFLINTn.
2 CorePac[n] will receive MSMC_mpf_errorn.CIC.
3 CorePac[n] will receive SEMINTn and SEMERRn.
4 CorePac[n] will receive PCIEXpress_MSI_INTn.
5 CorePac[n] will receive TSIPx_xxx[n].
6 CorePac[n] will receive INTDST(n+16).
7 n is core number.
8 n is core number.
9 CorePac[n] will receive TINTLn and TINTHn.
10 CorePac[n] will receive GPINTn.

Table 7-38 CIC0 Event Inputs (Secondary Interrupts for C66x CorePacs) (Sheet 1 of 5)

Input Event# on CIC	System Interrupt	Description
0	EDMA3CC1 CC_ERRINT	EDMA3CC1 error interrupt
1	EDMA3CC1 CC_MPINT	EDMA3CC1 memory protection interrupt
2	EDMA3CC1 TC_ERRINT0	EDMA3CC1 TC0 error interrupt
3	EDMA3CC1 TC_ERRINT1	EDMA3CC1 TC1 error interrupt
4	EDMA3CC1 TC_ERRINT2	EDMA3CC1 TC2 error interrupt
5	EDMA3CC1 TC_ERRINT3	EDMA3CC1 TC3 error interrupt
6	EDMA3CC1 CC_GINT	EDMA3CC1 GINT
7	Reserved	
8	EDMA3CC1 CCINT0	EDMA3CC1 individual completion interrupt
9	EDMA3CC1 CCINT1	EDMA3CC1 individual completion interrupt
10	EDMA3CC1 CCINT2	EDMA3CC1 individual completion interrupt
11	EDMA3CC1 CCINT3	EDMA3CC1 individual completion interrupt
12	EDMA3CC1 CCINT4	EDMA3CC1 individual completion interrupt
13	EDMA3CC1 CCINT5	EDMA3CC1 individual completion interrupt
14	EDMA3CC1 CCINT6	EDMA3CC1 individual completion interrupt
15	EDMA3CC1 CCINT7	EDMA3CC1 individual completion interrupt
16	EDMA3CC2 CC_ERRINT	EDMA3CC2 error interrupt
17	EDMA3CC2 CC_MPINT	EDMA3CC2 memory protection interrupt
18	EDMA3CC2 TC_ERRINT0	EDMA3CC2 TC0 error interrupt
19	EDMA3CC2 TC_ERRINT1	EDMA3CC2 TC1 error interrupt
20	EDMA3CC2 TC_ERRINT2	EDMA3CC2 TC2 error interrupt
21	EDMA3CC2 TC_ERRINT3	EDMA3CC2 TC3 error interrupt
22	EDMA3CC2 CC_GINT	EDMA3CC2 GINT
23	Reserved	
24	EDMA3CC2 CCINT0	EDMA3CC2 individual completion interrupt
25	EDMA3CC2 CCINT1	EDMA3CC2 individual completion interrupt
26	EDMA3CC2 CCINT2	EDMA3CC2 individual completion interrupt
27	EDMA3CC2 CCINT3	EDMA3CC2 individual completion interrupt
28	EDMA3CC2 CCINT4	EDMA3CC2 individual completion interrupt
29	EDMA3CC2 CCINT5	EDMA3CC2 individual completion interrupt

Copyright 2014 Texas Instruments Incorporated

Table 7-38 CIC0 Event Inputs (Secondary Interrupts for C66x CorePacs) (Sheet 2 of 5)

Input Event# on CIC	System Interrupt	Description
30	EDMA3CC2 CCINT6	EDMA3CC2 individual completion interrupt
31	EDMA3CC2 CCINT7	EDMA3CC2 individual completion interrupt
32	EDMA3CC0 CC_ERRINT	EDMA3CC0 error interrupt
33	EDMA3CC0 CC_MPINT	EDMA3CC0 memory protection interrupt
34	EDMA3CC0 TC_ERRINT0	EDMA3CC0 TC0 error interrupt
35	EDMA3CC0 TC_ERRINT1	EDMA3CC0 TC1 error interrupt
36	EDMA3CC0 CC_GINT	EDMA3CC0 GINT
37	Reserved	
38	EDMA3CC0 CCINT0	EDMA3CC0 individual completion interrupt
39	EDMA3CC0 CCINT1	EDMA3CC0 individual completion interrupt
40	EDMA3CC0 CCINT2	EDMA3CC0 individual completion interrupt
41	EDMA3CC0 CCINT3	EDMA3CC0 individual completion interrupt
42	EDMA3CC0 CCINT4	EDMA3CC0 individual completion interrupt
43	EDMA3CC0 CCINT5	EDMA3CC0 individual completion interrupt
44	EDMA3CC0 CCINT6	EDMA3CC0 individual completion interrupt
45	EDMA3CC0 CCINT7	EDMA3CC0 individual completion interrupt
46	Reserved	
47	QM_INT_PASS_TXQ_PEND_12	Queue manager pend event
48	PCIEXpress_ERR_INT	Protocol error interrupt
49	PCIEXpress_PM_INT	Power management interrupt
50	PCIEXpress_Legacy_INTA	Legacy interrupt mode
51	PCIEXpress_Legacy_INTB	Legacy interrupt mode
52	PCIEXpress_Legacy_INTC	Legacy interrupt mode
53	PCIEXpress_Legacy_INTD	Legacy interrupt mode
54	SPIINT0	SPI interrupt0
55	SPIINT1	SPI interrupt1
56	SPIXEVT	Transmit event
57	SPIREVT	Receive event
58	I2CINT	I^2C interrupt
59	I2CREVT	I^2C receive event
60	I2CXEVT	I^2C transmit event
61	Reserved	
62	Reserved	
63	TETBHFULLINT	TETB is half full
64	TETBFULLINT	TETB is full
65	TETBACQINT	Acquisition has been completed
66	TETBOVFLINT	Overflow condition occur
67	TETBUNFLINT	Underflow condition occur
68	MDIO_LINK_INTR0	Network coprocessor MDIO interrupt
69	MDIO_LINK_INTR1	Network coprocessor MDIO interrupt
70	MDIO_USER_INTR0	Network coprocessor MDIO interrupt
71	MDIO_USER_INTR1	Network coprocessor MDIO interrupt
72	MISC_INTR	Network coprocessor MISC interrupt

Copyright 2014 Texas Instruments Incorporated

Table 7-38 CIC0 Event Inputs (Secondary Interrupts for C66x CorePacs) (Sheet 3 of 5)

Input Event# on CIC	System Interrupt	Description
73	TRACER_CORE_0_INTD	Tracer sliding time window interrupt for individual core
74	TRACER_CORE_1_INTD	Tracer sliding time window interrupt for individual core
75	TRACER_CORE_2_INTD	Tracer sliding time window interrupt for individual core
76	TRACER_CORE_3_INTD	Tracer sliding time window interrupt for individual core
77	TRACER_DDR_INTD	Tracer sliding time window interrupt for DDR3 EMIF1
78	TRACER_MSMC_0_INTD	Tracer sliding time window interrupt for MSMC SRAM bank0
79	TRACER_MSMC_1_INTD	Tracer sliding time window interrupt for MSMC SRAM bank1
80	TRACER_MSMC_2_INTD	Tracer sliding time window interrupt for MSMC SRAM bank2
81	TRACER_MSMC_3_INTD	Tracer sliding time window interrupt for MSMC SRAM bank3
81	TRACER_CFG_INTD	Tracer sliding time window interrupt for CFG0 TeraNet
82	TRACER_QM_CFG_INTD	Tracer sliding time window interrupt for QM_SS CFG
84	TRACER_QM_DMA_INTD	Tracer sliding time window interrupt for QM_SS slave
85	TRACER_SM_INTD	Tracer sliding time window interrupt for semaphore
86	PSC_ALLINT	Power/sleep controller interrupt
87	MSMC_SCRUB_CERROR	Correctable (1-bit) soft error detected during scrub cycle
88	BOOTCFG_INTD	Chip-level MMR error register
89	Reserved	
90	MPU0_INTD (MPU0_ADDR_ERR_INT and MPU0_PROT_ERR_INT combined)	MPU0 addressing violation interrupt and protection violation interrupt.
91	QM_INT_PASS_TXQ_PEND_13	Queue manager pend event
92	MPU1_INTD (MPU1_ADDR_ERR_INT and MPU1_PROT_ERR_INT combined)	MPU1 addressing violation interrupt and protection violation interrupt.
93	QM_INT_PASS_TXQ_PEND_14	Queue manager pend event
94	MPU2_INTD (MPU2_ADDR_ERR_INT and MPU2_PROT_ERR_INT combined)	MPU2 addressing violation interrupt and protection violation interrupt.
95	QM_INT_PASS_TXQ_PEND_15	Queue manager pend event
96	MPU3_INTD (MPU3_ADDR_ERR_INT and MPU3_PROT_ERR_INT combined)	MPU3 addressing violation interrupt and protection violation interrupt.
97	QM_INT_PASS_TXQ_PEND_16	Queue manager pend event
98	MSMC_dedc_cerror	Correctable (1-bit) soft error detected on SRAM read
99	MSMC_dedc_nc_error	Non-correctable (2-bit) soft error detected on SRAM read
100	MSMC_scrub_nc_error	Non-correctable (2-bit) soft error detected during scrub cycle
101	Reserved	
102	MSMC_mpf_error8	Memory protection fault indicators for each system master PrivID
103	MSMC_mpf_error9	Memory protection fault indicators for each system master PrivID
104	MSMC_mpf_error10	Memory protection fault indicators for each system master PrivID
105	MSMC_mpf_error11	Memory protection fault indicators for each system master PrivID
105	MSMC_mpf_error12	Memory protection fault indicators for each system master PrivID
107	MSMC_mpf_error13	Memory protection fault indicators for each system master PrivID
108	MSMC_mpf_error14	Memory protection fault indicators for each system master PrivID
109	MSMC_mpf_error15	Memory protection fault indicators for each system master PrivID
110	DDR3_ERR	DDR3 EMIF error interrupt
111	VUSR_INT_O	HyperLink interrupt
112	INTDST0	RapidIO interrupt
113	INTDST1	RapidIO interrupt

Copyright 2014 Texas Instruments Incorporated

Table 7-38 CIC0 Event Inputs (Secondary Interrupts for C66x CorePacs) (Sheet 4 of 5)

Input Event# on CIC	System Interrupt	Description
114	INTDST2	RapidIO interrupt
115	INTDST3	RapidIO interrupt
116	INTDST4	RapidIO interrupt
117	INTDST5	RapidIO interrupt
118	INTDST6	RapidIO interrupt
119	INTDST7	RapidIO interrupt
120	INTDST8	RapidIO interrupt
121	INTDST9	RapidIO interrupt
122	INTDST10	RapidIO interrupt
123	INTDST11	RapidIO interrupt
124	INTDST12	RapidIO interrupt
125	INTDST13	RapidIO interrupt
126	INTDST14	RapidIO interrupt
127	INTDST15	RapidIO interrupt
128	EASYNCERR	EMIF16 error interrupt
129	TRACER_CORE_4_INTD	Tracer sliding time window interrupt for individual core
130	TRACER_CORE_5_INTD	Tracer sliding time window interrupt for individual core
131	TRACER_CORE_6_INTD	Tracer sliding time window interrupt for individual core
132	TRACER_CORE_7_INTD	Tracer sliding time window interrupt for individual core
133	QM_INT_PKTDMA_0	Queue manager Interrupt for packet DMA starvation
134	QM_INT_PKTDMA_1	Queue manager Interrupt for packet DMA starvation
135	RapidIO_INT_PKTDMA_0	RapidIO Interrupt for packet DMA starvation
136	PASS_INT_PKTDMA_0	Network coprocessor Interrupt for packet DMA starvation
137	SmartReflex_intrreq0	SmartReflex sensor interrupt
138	SmartReflex_intrreq1	SmartReflex sensor interrupt
139	SmartReflex_intrreq2	SmartReflex sensor interrupt
140	SmartReflex_intrreq3	SmartReflex sensor interrupt
141	VPNoSMPSAck	VPVOLTUPDATE has been asserted but SMPS has not been responded to in a defined time interval
142	VPEqValue	SRSINTERUPTZ is asserted, but the new voltage is not different from the current SMPS voltage
143	VPMaxVdd	The new voltage required is equal to or greater than MaxVdd.
144	VPMinVdd	The new voltage required is equal to or less than MinVdd.
145	VPINIDLE	The FSM of Voltage processor is in idle.
146	VPOPPChangeDone	The average frequency error is within the desired limit.
147	Reserved	
148	UARTINT	UART interrupt
149	URXEVT	UART receive event
150	UTXEVT	UART transmit event
151	QM_INT_PASS_TXQ_PEND_17	Queue manager pend event
152	QM_INT_PASS_TXQ_PEND_18	Queue manager pend event
153	QM_INT_PASS_TXQ_PEND_19	Queue manager pend event
154	QM_INT_PASS_TXQ_PEND_20	Queue manager pend event
155	QM_INT_PASS_TXQ_PEND_21	Queue manager pend event

Copyright 2014 Texas Instruments Incorporated

Table 7-38 CIC0 Event Inputs (Secondary Interrupts for C66x CorePacs) (Sheet 5 of 5)

Input Event# on CIC	System Interrupt	Description
156	QM_INT_PASS_TXQ_PEND_22	Queue manager pend event
157	QM_INT_PASS_TXQ_PEND_23	Queue manager pend event
158	QM_INT_PASS_TXQ_PEND_24	Queue manager pend event
159	QM_INT_PASS_TXQ_PEND_25	Queue manager pend event
End of Table 7-38		

Table 7-39 CIC1 Event Inputs (Secondary Interrupts for C66x CorePacs) (Sheet 1 of 4)

Input Event# on CIC	System Interrupt	Description
0	EDMA3CC1 CC_ERRINT	EDMA3CC1 error interrupt
1	EDMA3CC1 CC_MPINT	EDMA3CC1 memory protection interrupt
2	EDMA3CC1 TC_ERRINT0	EDMA3CC1 TC0 error interrupt
3	EDMA3CC1 TC_ERRINT1	EDMA3CC1 TC1 error interrupt
4	EDMA3CC1 TC_ERRINT2	EDMA3CC1 TC2 error interrupt
5	EDMA3CC1 TC_ERRINT3	EDMA3CC1 TC3 error interrupt
6	EDMA3CC1 CC_GINT	EDMA3CC1 GINT
7	Reserved	
8	EDMA3CC1 CCINT0	EDMA3CC1 individual completion interrupt
9	EDMA3CC1 CCINT1	EDMA3CC1 individual completion interrupt
10	EDMA3CC1 CCINT2	EDMA3CC1 individual completion interrupt
11	EDMA3CC1 CCINT3	EDMA3CC1 individual completion interrupt
12	EDMA3CC1 CCINT4	EDMA3CC1 individual completion interrupt
13	EDMA3CC1 CCINT5	EDMA3CC1 individual completion interrupt
14	EDMA3CC1 CCINT6	EDMA3CC1 individual completion interrupt
15	EDMA3CC1 CCINT7	EDMA3CC1 individual completion interrupt
16	EDMA3CC2 CC_ERRINT	EDMA3CC2 error interrupt
17	EDMA3CC2 CC_MPINT	EDMA3CC2 memory protection interrupt
18	EDMA3CC2 TC_ERRINT0	EDMA3CC2 TC0 error interrupt
19	EDMA3CC2 TC_ERRINT1	EDMA3CC2 TC1 error interrupt
20	EDMA3CC2 TC_ERRINT2	EDMA3CC2 TC2 error interrupt
21	EDMA3CC2 TC_ERRINT3	EDMA3CC2 TC3 error interrupt
22	EDMA3CC2 CC_GINT	EDMA3CC2 GINT
23	Reserved	
24	EDMA3CC2 CCINT0	EDMA3CC2 individual completion interrupt
25	EDMA3CC2 CCINT1	EDMA3CC2 individual completion interrupt
26	EDMA3CC2 CCINT2	EDMA3CC2 individual completion interrupt
27	EDMA3CC2 CCINT3	EDMA3CC2 individual completion interrupt
28	EDMA3CC2 CCINT4	EDMA3CC2 individual completion interrupt
29	EDMA3CC2 CCINT5	EDMA3CC2 individual completion interrupt
30	EDMA3CC2 CCINT6	EDMA3CC2 individual completion interrupt
31	EDMA3CC2 CCINT7	EDMA3CC2 individual completion interrupt
32	EDMA3CC0 CC_ERRINT	EDMA3CC0 error interrupt
33	EDMA3CC0 CC_MPINT	EDMA3CC0 memory protection interrupt
34	EDMA3CC0 TC_ERRINT0	EDMA3CC0 TC0 error interrupt

Copyright 2014 Texas Instruments Incorporated

Table 7-39 CIC1 Event Inputs (Secondary Interrupts for C66x CorePacs) (Sheet 2 of 4)

Input Event# on CIC	System Interrupt	Description
35	EDMA3CC0 TC_ERRINT1	EDMA3CC0 TC1 error interrupt
36	EDMA3CC0 CC_GINT	EDMA3CC0 GINT
37	Reserved	
38	EDMA3CC0 CCINT0	EDMA3CC0 individual completion interrupt
39	EDMA3CC0 CCINT1	EDMA3CC0 individual completion interrupt
40	EDMA3CC0 CCINT2	EDMA3CC0 individual completion interrupt
41	EDMA3CC0 CCINT3	EDMA3CC0 individual completion interrupt
42	EDMA3CC0 CCINT4	EDMA3CC0 individual completion interrupt
43	EDMA3CC0 CCINT5	EDMA3CC0 individual completion interrupt
44	EDMA3CC0 CCINT6	EDMA3CC0 individual completion interrupt
45	EDMA3CC0 CCINT7	EDMA3CC0 individual completion interrupt
46	Reserved	
47	QM_INT_PASS_TXQ_PEND_18	Queue manager pend event
48	PCIEXpress_ERR_INT	Protocol error interrupt
49	PCIEXpress_PM_INT	Power management interrupt
50	PCIEXpress_Legacy_INTA	Legacy interrupt mode
51	PCIEXpress_Legacy_INTB	Legacy interrupt mode
52	PCIEXpress_Legacy_INTC	Legacy interrupt mode
53	PCIEXpress_Legacy_INTD	Legacy interrupt mode
54	SPIINT0	SPI interrupt0
55	SPIINT1	SPI interrupt1
56	SPIXEVT	Transmit event
57	SPIREVT	Receive event
58	I2CINT	I^2C interrupt
59	I2CREVT	I^2C receive event
60	I2CXEVT	I^2C transmit event
61	Reserved	
62	Reserved	
63	TETBHFULLINT	TETB is half full
64	TETBFULLINT	TETB is full
65	TETBACQINT	Acquisition has been completed
66	TETBOVFLINT	Overflow condition occur
67	TETBUNFLINT	Underflow condition occur
68	MDIO_LINK_INTR0	Network coprocessor MDIO interrupt
69	MDIO_LINK_INTR1	Network coprocessor MDIO interrupt
70	MDIO_USER_INTR0	Network coprocessor MDIO interrupt
71	MDIO_USER_INTR1	Network coprocessor MDIO interrupt
72	MISC_INTR	Network coprocessor MISC Interrupt
73	TRACER_CORE_0_INTD	Tracer sliding time window interrupt for individual core
74	TRACER_CORE_1_INTD	Tracer sliding time window interrupt for individual core
75	TRACER_CORE_2_INTD	Tracer sliding time window interrupt for individual core
76	TRACER_CORE_3_INTD	Tracer sliding time window interrupt for individual core
77	TRACER_DDR_INTD	Tracer sliding time window interrupt for DDR3 EMIF1

Copyright 2014 Texas Instruments Incorporated

Table 7-39 CIC1 Event Inputs (Secondary Interrupts for C66x CorePacs) (Sheet 3 of 4)

Input Event# on CIC	System Interrupt	Description
78	TRACER_MSMC_0_INTD	Tracer sliding time window interrupt for MSMC SRAM bank0
79	TRACER_MSMC_1_INTD	Tracer sliding time window interrupt for MSMC SRAM bank1
80	TRACER_MSMC_2_INTD	Tracer sliding time window interrupt for MSMC SRAM bank2
81	TRACER_MSMC_3_INTD	Tracer sliding time window interrupt for MSMC SRAM bank3
82	TRACER_CFG_INTD	Tracer sliding time window interrupt for CFG0 TeraNet
83	TRACER_QM_CFG_INTD	Tracer sliding time window interrupt for QM_SS CFG
84	TRACER_QM_DMA_INTD	Tracer sliding time window interrupt for QM_SS slave
85	TRACER_SM_INTD	Tracer sliding time window interrupt for semaphore
86	PSC_ALLINT	Power/sleep controller interrupt
87	MSMC_SCRUB_CERROR	Correctable (1-bit) soft error detected during scrub cycle
88	BOOTCFG_INTD	BOOTCFG Interrupt BOOTCFG_ERR and BOOTCFG_PROT
89	Reserved	
90	MPU0_INTD (MPU0_ADDR_ERR_INT and MPU0_PROT_ERR_INT combined)	MPU0 addressing violation interrupt and protection violation interrupt.
91	QM_INT_PASS_TXQ_PEND_19	Queue manager pend event
92	MPU1_INTD (MPU1_ADDR_ERR_INT and MPU1_PROT_ERR_INT combined)	MPU1 addressing violation interrupt and protection violation interrupt.
93	QM_INT_PASS_TXQ_PEND_20	Queue manager pend event
94	MPU2_INTD (MPU2_ADDR_ERR_INT and MPU2_PROT_ERR_INT combined)	MPU2 addressing violation interrupt and protection violation interrupt.
95	QM_INT_PASS_TXQ_PEND_21	Queue manager pend event
96	MPU3_INTD (MPU3_ADDR_ERR_INT and MPU3_PROT_ERR_INT combined)	MPU3 addressing violation interrupt and protection violation interrupt.
97	QM_INT_PASS_TXQ_PEND_22	Queue manager pend event
98	MSMC_dedc_cerror	Correctable (1-bit) soft error detected on SRAM read
99	MSMC_dedc_nc_error	Non-correctable (2-bit) soft error detected on SRAM read
100	MSMC_scrub_nc_error	Non-correctable (2-bit) soft error detected during scrub cycle
101	Reserved	
102	MSMC_mpf_error8	Memory protection fault indicators for each system master PrivID
103	MSMC_mpf_error9	Memory protection fault indicators for each system master PrivID
104	MSMC_mpf_error10	Memory protection fault indicators for each system master PrivID
105	MSMC_mpf_error11	Memory protection fault indicators for each system master PrivID
106	MSMC_mpf_error12	Memory protection fault indicators for each system master PrivID
107	MSMC_mpf_error13	Memory protection fault indicators for each system master PrivID
108	MSMC_mpf_error14	Memory protection fault indicators for each system master PrivID
109	MSMC_mpf_error15	Memory protection fault indicators for each system master PrivID
110	DDR3_ERR	DDR3 EMIF error interrupt
111	VUSR_INT_O	HyperLink interrupt
112	INTDST0	RapidIO interrupt
113	INTDST1	RapidIO interrupt
114	INTDST2	RapidIO interrupt
115	INTDST3	RapidIO interrupt
116	INTDST4	RapidIO interrupt
117	INTDST5	RapidIO interrupt
118	INTDST6	RapidIO interrupt

Copyright 2014 Texas Instruments Incorporated

Table 7-39 CIC1 Event Inputs (Secondary Interrupts for C66x CorePacs) (Sheet 4 of 4)

Input Event# on CIC	System Interrupt	Description
119	INTDST7	RapidIO interrupt
120	INTDST8	RapidIO interrupt
121	INTDST9	RapidIO interrupt
122	INTDST10	RapidIO interrupt
123	INTDST11	RapidIO interrupt
124	INTDST12	RapidIO interrupt
125	INTDST13	RapidIO interrupt
126	INTDST14	RapidIO interrupt
127	INTDST15	RapidIO interrupt
128	EASYNCERR	EMIF16 error interrupt
129	TRACER_CORE_4_INTD	Tracer sliding time window interrupt for individual core
130	TRACER_CORE_5_INTD	Tracer sliding time window interrupt for individual core
131	TRACER_CORE_6_INTD	Tracer sliding time window interrupt for individual core
132	TRACER_CORE_7_INTD	Tracer sliding time window interrupt for individual core
133	QM_INT_PKTDMA_0	Queue manager interrupt for PKTDMA starvation
134	QM_INT_PKTDMA_1	Queue manager interrupt for PKTDMA starvation
135	RapidIO_INT_PKTDMA_0	RapidIO interrupt for PKTDMA starvation
136	PASS_INT_PKTDMA_0	Network coprocessor interrupt for PKTDMA starvation
137	SmartReflex_intrreq0	SmartReflex sensor interrupt
138	SmartReflex_intrreq1	SmartReflex sensor interrupt
139	SmartReflex_intrreq2	SmartReflex sensor interrupt
140	SmartReflex_intrreq3	SmartReflex sensor interrupt
141	VPNoSMPSAck	VPVOLTUPDATE has been asserted but SMPS has not been responded in a defined time interval
142	VPEqValue	SRSINTERUPTZ is asserted, but the new voltage is not different from the current SMPS voltage
143	VPMaxVdd	The new voltage required is equal to or greater than MaxVdd
144	VPMinVdd	The new voltage required is equal to or less than MinVdd
145	VPINIDLE	Indicating that the FSM of Voltage Processor is in idle
146	VPOPPChangeDone	Indicating that the average frequency error is within the desired limit.
147	Reserved	
148	UARTINT	UART interrupt
149	URXEVT	UART receive event
150	UTXEVT	UART transmit event
151	QM_INT_PASS_TXQ_PEND_23	Queue manager pend event
152	QM_INT_PASS_TXQ_PEND_24	Queue manager pend event
153	QM_INT_PASS_TXQ_PEND_25	Queue manager pend event
154	QM_INT_PASS_TXQ_PEND_26	Queue manager pend event
155	QM_INT_PASS_TXQ_PEND_27	Queue manager pend event
156	QM_INT_PASS_TXQ_PEND_28	Queue manager pend event
157	QM_INT_PASS_TXQ_PEND_29	Queue manager pend event
158	QM_INT_PASS_TXQ_PEND_30	Queue manager pend event
159	QM_INT_PASS_TXQ_PEND_31	Queue manager pend event
End of Table 7-39		

Table 7-40 CIC2 Event Inputs (Secondary Events for EDMA3CC1 and EDMA3CC2) (Sheet 1 of 4)

Input Event # on CIC	System Interrupt	Description
0	GPINT8	GPIO interrupt
1	GPINT9	GPIO interrupt
2	GPINT10	GPIO interrupt
3	GPINT11	GPIO interrupt
4	GPINT12	GPIO interrupt
5	GPINT13	GPIO interrupt
6	GPINT14	GPIO interrupt
7	GPINT15	GPIO interrupt
8	TETBHFULLINT	System TETB is half full
9	TETBFULLINT	System TETB is full
10	TETBACQINT	System TETB acquisition has been completed
11	TETBHFULLINT0	TETB0 is half full
12	TETBFULLINT0	TETB0 is full
13	TETBACQINT0	TETB0 acquisition has been completed
14	TETBHFULLINT1	TETB1 is half full
15	TETBFULLINT1	TETB1 is full
16	TETBACQINT1	TETB1 acquisition has been completed
17	TETBHFULLINT2	TETB2 is half full
18	TETBFULLINT2	TETB2 is full
19	TETBACQINT2	TETB2 acquisition has been completed
20	TETBHFULLINT3	TETB3 is half full
21	TETBFULLINT3	TETB3 is full
22	TETBACQINT3	TETB3 acquisition has been completed
23	Reserved	
24	QM_INT_HIGH_16	QM interrupt
25	QM_INT_HIGH_17	QM interrupt
26	QM_INT_HIGH_18	QM interrupt
27	QM_INT_HIGH_19	QM interrupt
28	QM_INT_HIGH_20	QM interrupt
29	QM_INT_HIGH_21	QM interrupt
30	QM_INT_HIGH_22	QM interrupt
31	QM_INT_HIGH_23	QM interrupt
32	QM_INT_HIGH_24	QM interrupt
33	QM_INT_HIGH_25	QM interrupt
34	QM_INT_HIGH_26	QM interrupt
35	QM_INT_HIGH_27	QM interrupt
36	QM_INT_HIGH_28	QM interrupt
37	QM_INT_HIGH_29	QM interrupt
38	QM_INT_HIGH_30	QM interrupt
39	QM_INT_HIGH_31	QM interrupt
40	MDIO_LINK_INTR0	Network coprocessor MDIO interrupt
41	MDIO_LINK_INTR1	Network coprocessor MDIO interrupt
42	MDIO_USER_INTR0	Network coprocessor MDIO interrupt

Copyright 2014 Texas Instruments Incorporated

Table 7-40 CIC2 Event Inputs (Secondary Events for EDMA3CC1 and EDMA3CC2) (Sheet 2 of 4)

Input Event # on CIC	System Interrupt	Description
43	MDIO_USER_INTR0	Network coprocessor MDIO interrupt
44	MISC_INTR	Network coprocessor MISC interrupt
45	TRACER_CORE_0_INTD	Tracer sliding time window interrupt for individual core
46	TRACER_CORE_1_INTD	Tracer sliding time window interrupt for individual core
47	TRACER_CORE_2_INTD	Tracer sliding time window interrupt for individual core
48	TRACER_CORE_3_INTD	Tracer sliding time window interrupt for individual core
49	TRACER_DDR_INTD	Tracer sliding time window interrupt for DDR3 EMIF
50	TRACER_MSMC_0_INTD	Tracer sliding time window interrupt for MSMC SRAM bank0
51	TRACER_MSMC_1_INTD	Tracer sliding time window interrupt for MSMC SRAM bank1
52	TRACER_MSMC_2_INTD	Tracer sliding time window interrupt for MSMC SRAM bank2
53	TRACER_MSMC_3_INTD	Tracer sliding time window interrupt for MSMC SRAM bank3
54	TRACER_CFG_INTD	Tracer sliding time window interrupt for CFG0 TeraNet
55	TRACER_QM_CFG_INTD	Tracer sliding time window interrupt for QM_SS CFG
56	TRACER_QM_DMA_INTD	Tracer sliding time window interrupt for QM_SS slave port
57	TRACER_SM_INTD	Tracer sliding time window interrupt for semaphore
58	SEMERR0	Semaphore interrupt
59	SEMERR1	Semaphore interrupt
60	SEMERR2	Semaphore interrupt
61	SEMERR3	Semaphore interrupt
62	BOOTCFG_INTD	BOOTCFG interrupt BOOTCFG_ERR and BOOTCFG_PROT
63	PASS_INT_PKTDMA_0	Network coprocessor interrupt for packet DMA starvation
64	MPU0_INTD (MPU0_ADDR_ERR_INT and MPU0_PROT_ERR_INT combined)	MPU0 addressing violation interrupt and protection violation interrupt.
65	MSMC_scrub_cerror	Correctable (1-bit) soft error detected during scrub cycle
66	MPU1_INTD (MPU1_ADDR_ERR_INT and MPU1_PROT_ERR_INT combined)	MPU1 addressing violation interrupt and protection violation interrupt.
67	RapidIO_INT_PKTDMA_0	RapidIO interrupt for packet DMA starvation
68	MPU2_INTD (MPU2_ADDR_ERR_INT and MPU2_PROT_ERR_INT combined)	MPU2 addressing violation interrupt and protection violation interrupt.
69	QM_INT_PKTDMA_0	QM interrupt for packet DMA starvation
70	MPU3_INTD (MPU3_ADDR_ERR_INT and MPU3_PROT_ERR_INT combined)	MPU3 addressing violation interrupt and protection violation interrupt.
71	QM_INT_PKTDMA_1	QM interrupt for packet DMA starvation
72	MSMC_dedc_cerror	Correctable (1-bit) soft error detected on SRAM read
73	MSMC_dedc_nc_error	Non-correctable (2-bit) soft error detected on SRAM read
74	MSMC_scrub_nc_error	Non-correctable (2-bit) soft error detected during scrub cycle
75	Reserved	
76	MSMC_mpf_error0	Memory protection fault indicators for each system master PrivID
77	MSMC_mpf_error1	Memory protection fault indicators for each system master PrivID
78	MSMC_mpf_error2	Memory protection fault indicators for each system master PrivID
79	MSMC_mpf_error3	Memory protection fault indicators for each system master PrivID
80	MSMC_mpf_error4	Memory protection fault indicators for each system master PrivID
81	MSMC_mpf_error5	Memory protection fault indicators for each system master PrivID
82	MSMC_mpf_error6	Memory protection fault indicators for each system master PrivID
83	MSMC_mpf_error7	Memory protection fault indicators for each system master PrivID

Copyright 2014 Texas Instruments Incorporated

Table 7-40 CIC2 Event Inputs (Secondary Events for EDMA3CC1 and EDMA3CC2) (Sheet 3 of 4)

Input Event # on CIC	System Interrupt	Description
84	MSMC_mpf_error8	Memory protection fault indicators for each system master PrivID
85	MSMC_mpf_error9	Memory protection fault indicators for each system master PrivID
86	MSMC_mpf_error10	Memory protection fault indicators for each system master PrivID
87	MSMC_mpf_error11	Memory protection fault indicators for each system master PrivID
88	MSMC_mpf_error12	Memory protection fault indicators for each system master PrivID
89	MSMC_mpf_error13	Memory protection fault indicators for each system master PrivID
90	MSMC_mpf_error14	Memory protection fault indicators for each system master PrivID
91	MSMC_mpf_error15	Memory protection fault indicators for each system master PrivID
92	Reserved	
93	INTDST0	RapidIO interrupt
94	INTDST1	RapidIO interrupt
95	INTDST2	RapidIO interrupt
96	INTDST3	RapidIO interrupt
97	INTDST4	RapidIO interrupt
98	INTDST5	RapidIO interrupt
99	INTDST6	RapidIO interrupt
100	INTDST7	RapidIO interrupt
101	INTDST8	RapidIO interrupt
102	INTDST9	RapidIO interrupt
103	INTDST10	RapidIO interrupt
104	INTDST11	RapidIO interrupt
105	INTDST12	RapidIO interrupt
106	INTDST13	RapidIO interrupt
107	INTDST14	RapidIO interrupt
108	INTDST15	RapidIO interrupt
109	INTDST16	RapidIO interrupt
110	INTDST17	RapidIO interrupt
111	INTDST18	RapidIO interrupt
112	INTDST19	RapidIO interrupt
113	INTDST20	RapidIO interrupt
114	INTDST21	RapidIO interrupt
115	INTDST22	RapidIO interrupt
116	INTDST23	RapidIO interrupt
117	EASYNCERR	EMIF16 error interrupt
118	TETBHFULLINT4	TETB4 is half full
119	TETBFULLINT4	TETB4 is full
120	TETBACQINT4	TETB4 acquisition has been completed
121	TETBHFULLINT5	TETB5 is half full
122	TETBFULLINT5	TETB5 is full
123	TETBACQINT5	TETB5 acquisition has been completed
124	TETBHFULLINT6	TETB6 is half full
125	TETBFULLINT6	TETB6 is full
126	TETBACQINT6	TETB6 acquisition has been completed
127	TETBHFULLINT7	TETB7 is half full

Copyright 2014 Texas Instruments Incorporated

Table 7-40 CIC2 Event Inputs (Secondary Events for EDMA3CC1 and EDMA3CC2) (Sheet 4 of 4)

Input Event # on CIC	System Interrupt	Description
128	TETBFULLINT7	TETB7 is full
129	TETBACQINT7	TETB7 acquisition has been completed
130	TRACER_CORE_4_INTD	Tracer sliding time window interrupt for individual core
131	TRACER_CORE_5_INTD	Tracer sliding time window interrupt for individual core
132	TRACER_CORE_6_INTD	Tracer sliding time window interrupt for individual core
133	TRACER_CORE_7_INTD	Tracer sliding time window interrupt for individual core
134	SEMERR4	Semaphore error interrupt
135	SEMERR5	Semaphore error interrupt
136	SEMERR6	Semaphore error interrupt
137	SEMERR7	Semaphore error interrupt
138	QM_INT_HIGH_0	QM interrupt
139	QM_INT_HIGH_1	QM interrupt
140	QM_INT_HIGH_2	QM interrupt
141	QM_INT_HIGH_3	QM interrupt
142	QM_INT_HIGH_4	QM interrupt
143	QM_INT_HIGH_5	QM interrupt
144	QM_INT_HIGH_6	QM interrupt
145	QM_INT_HIGH_7	QM interrupt
146	QM_INT_HIGH_8	QM interrupt
147	QM_INT_HIGH_9	QM interrupt
148	QM_INT_HIGH_10	QM interrupt
149	QM_INT_HIGH_11	QM interrupt
150	QM_INT_HIGH_12	QM interrupt
151	QM_INT_HIGH_13	QM interrupt
152	QM_INT_HIGH_14	QM interrupt
153	QM_INT_HIGH_15	QM interrupt
154-159	Reserved	
End of Table 7-40		

Table 7-41 CIC3 Event Inputs (Secondary Events for EDMA3CC0 and HyperLink) (Sheet 1 of 3)

Input Event # on CIC	System Interrupt	Description
0	GPINT0	GPIO interrupt
1	GPINT1	GPIO interrupt
2	GPINT2	GPIO interrupt
3	GPINT3	GPIO interrupt
4	GPINT4	GPIO interrupt
5	GPINT5	GPIO interrupt
6	GPINT6	GPIO interrupt
7	GPINT7	GPIO interrupt
8	GPINT8	GPIO interrupt
9	GPINT9	GPIO interrupt
10	GPINT10	GPIO interrupt
11	GPINT11	GPIO interrupt

Copyright 2014 Texas Instruments Incorporated

Table 7-41 CIC3 Event Inputs (Secondary Events for EDMA3CC0 and HyperLink) (Sheet 2 of 3)

Input Event # on CIC	System Interrupt	Description
12	GPINT12	GPIO interrupt
13	GPINT13	GPIO interrupt
14	GPINT14	GPIO interrupt
15	GPINT15	GPIO interrupt
16	TETBHFULLINT	System TETB is half full
17	TETBFULLINT	System TETB is full
18	TETBACQINT	System TETB acquisition has been completed
19	TETBHFULLINT0	TETB0 is half full
20	TETBFULLINT0	TETB0 is full
21	TETBACQINT0	TETB0 acquisition has been completed
22	TETBHFULLINT1	TETB1 is half full
23	TETBFULLINT1	TETB1 is full
24	TETBACQINT1	TETB1 acquisition has been completed
25	TETBHFULLINT2	TETB2 is half full
26	TETBFULLINT2	TETB2 is full
27	TETBACQINT2	TETB2 acquisition has been completed
28	TETBHFULLINT3	TETB3 is half full
29	TETBFULLINT3	TETB3 is full
30	TETBACQINT3	TETB3 acquisition has been completed
31	TRACER_CORE_0_INTD	Tracer sliding time window interrupt for individual core
32	TRACER_CORE_1_INTD	Tracer sliding time window interrupt for individual core
33	TRACER_CORE_2_INTD	Tracer sliding time window interrupt for individual core
34	TRACER_CORE_3_INTD	Tracer sliding time window interrupt for individual core
35	TRACER_DDR_INTD	Tracer sliding time window interrupt for DDR3 EMIF1
36	TRACER_MSMC_0_INTD	Tracer sliding time window interrupt for MSMC SRAM bank0
37	TRACER_MSMC_1_INTD	Tracer sliding time window interrupt for MSMC SRAM bank1
38	TRACER_MSMC_2_INTD	Tracer sliding time window interrupt for MSMC SRAM bank2
39	TRACER_MSMC_3_INTD	Tracer sliding time window interrupt for MSMC SRAM bank3
40	TRACER_CFG_INTD	Tracer sliding time window interrupt for CFG0 TeraNet
41	TRACER_QM_CFG_INTD	Tracer sliding time window interrupt for QM_SS CFG
42	TRACER_QM_DMA_INTD	Tracer sliding time window interrupt for QM_SS slave port
43	TRACER_SM_INTD	Tracer sliding time window interrupt for semaphore
44	VUSR_INT_O	HyperLink interrupt
45	TETBHFULLINT4	TETB4 is half full
46	TETBFULLINT4	TETB4 is full
47	TETBACQINT4	TETB4 acquisition has been completed
48	TETBHFULLINT5	TETB5 is half full
49	TETBFULLINT5	TETB5 is full
50	TETBACQINT5	TETB5 acquisition has been completed
51	TETBHFULLINT6	TETB6 is half full
52	TETBFULLINT6	TETB6 is full
53	TETBACQINT6	TETB6 acquisition has been completed
54	TETBHFULLINT7	TETB7 is half full
55	TETBFULLINT7	TETB7 is full

Copyright 2014 Texas Instruments Incorporated

Table 7-41 CIC3 Event Inputs (Secondary Events for EDMA3CC0 and HyperLink) (Sheet 3 of 3)

Input Event # on CIC	System Interrupt	Description
56	TETBACQINT7	TETB7 acquisition has been completed
57	TRACER_CORE_4_INTD	Tracer sliding time window interrupt for individual core
58	TRACER_CORE_5_INTD	Tracer sliding time window interrupt for individual core
59	TRACER_CORE_6_INTD	Tracer sliding time window interrupt for individual core
60	TRACER_CORE_7_INTD	Tracer sliding time window interrupt for individual core
61	DDR3_ERR	DDR3 EMIF Error interrupt
62-79	Reserved	
End of Table 7-41		

7.10.2 CIC Registers

This section includes the offsets for CIC registers. The base addresses for interrupt control registers are CIC0 - 0x0260 0000, CIC1 - 0x0260 4000, CIC2 - 0x0260 8000, and CIC3 - 0x0260 C000.

7.10.2.1 CIC0/CIC1 Register Map

Table 7-42 CIC0/CIC1 Register

Address Offset	Register Mnemonic	Register Name
0x0	REVISION_REG	Revision Register
0x10	GLOBAL_ENABLE_HINT_REG	Global Host Int Enable Register
0x20	STATUS_SET_INDEX_REG	Status Set Index Register
0x24	STATUS_CLR_INDEX_REG	Status Clear Index Register
0x28	ENABLE_SET_INDEX_REG	Enable Set Index Register
0x2C	ENABLE_CLR_INDEX_REG	Enable Clear Index Register
0x34	HINT_ENABLE_SET_INDEX_REG	Host Int Enable Set Index Register
0x38	HINT_ENABLE_CLR_INDEX_REG	Host Int Enable Clear Index Register
0x200	RAW_STATUS_REG0	Raw Status Register 0
0x204	RAW_STATUS_REG1	Raw Status Register 1
0x208	RAW_STATUS_REG2	Raw Status Register 2
0x20C	RAW_STATUS_REG3	Raw Status Register 3
0x210	RAW_STATUS_REG4	Raw Status Register 4
0x280	ENA_STATUS_REG0	Enabled Status Register 0
0x284	ENA_STATUS_REG1	Enabled Status Register 1
0x288	ENA_STATUS_REG2	Enabled Status Register 2
0x28c	ENA_STATUS_REG3	Enabled Status Register 3
0x290	ENA_STATUS_REG4	Enabled Status Register 4
0x300	ENABLE_REG0	Enable Register 0
0x304	ENABLE_REG1	Enable Register 1
0x308	ENABLE_REG2	Enable Register 2
0x30c	ENABLE_REG3	Enable Register 3
0x310	ENABLE_REG4	Enable Register 4
0x380	ENABLE_CLR_REG0	Enable Clear Register 0
0x384	ENABLE_CLR_REG1	Enable Clear Register 1
0x388	ENABLE_CLR_REG2	Enable Clear Register 2
0x38c	ENABLE_CLR_REG3	Enable Clear Register 3

Table 7-42 CIC0/CIC1 Register

Address Offset	Register Mnemonic	Register Name
0x390	ENABLE_CLR_REG4	Enable Clear Register 4
0x400	CH_MAP_REG0	Interrupt Channel Map Register for 0 to 0+3
0x404	CH_MAP_REG1	Interrupt Channel Map Register for 4 to 4+3
0x408	CH_MAP_REG2	Interrupt Channel Map Register for 8 to 8+3
0x40c	CH_MAP_REG3	Interrupt Channel Map Register for 12 to 12+3
0x410	CH_MAP_REG4	Interrupt Channel Map Register for 16 to 16+3
0x414	CH_MAP_REG5	Interrupt Channel Map Register for 20 to 20+3
0x418	CH_MAP_REG6	Interrupt Channel Map Register for 24 to 24+3
0x41c	CH_MAP_REG7	Interrupt Channel Map Register for 28 to 28+3
0x420	CH_MAP_REG8	Interrupt Channel Map Register for 32 to 32+3
0x424	CH_MAP_REG9	Interrupt Channel Map Register for 36 to 36+3
0x428	CH_MAP_REG10	Interrupt Channel Map Register for 40 to 40+3
0x42c	CH_MAP_REG11	Interrupt Channel Map Register for 44 to 44+3
0x430	CH_MAP_REG12	Interrupt Channel Map Register for 48 to 48+3
0x434	CH_MAP_REG13	Interrupt Channel Map Register for 52 to 52+3
0x438	CH_MAP_REG14	Interrupt Channel Map Register for 56 to 56+3
0x43c	CH_MAP_REG15	Interrupt Channel Map Register for 60 to 60+3
0x440	CH_MAP_REG16	Interrupt Channel Map Register for 64 to 64+3
0x444	CH_MAP_REG17	Interrupt Channel Map Register for 68 to 68+3
0x448	CH_MAP_REG18	Interrupt Channel Map Register for 72 to 72+3
0x44c	CH_MAP_REG19	Interrupt Channel Map Register for 76 to 76+3
0x450	CH_MAP_REG20	Interrupt Channel Map Register for 80 to 80+3
0x454	CH_MAP_REG21	Interrupt Channel Map Register for 84 to 84+3
0x458	CH_MAP_REG22	Interrupt Channel Map Register for 88 to 88+3
0x45c	CH_MAP_REG23	Interrupt Channel Map Register for 92 to 92+3
0x460	CH_MAP_REG24	Interrupt Channel Map Register for 96 to 96+3
0x464	CH_MAP_REG25	Interrupt Channel Map Register for 100 to 100+3
0x468	CH_MAP_REG26	Interrupt Channel Map Register for 104 to 104+3
0x46c	CH_MAP_REG27	Interrupt Channel Map Register for 108 to 108+3
0x470	CH_MAP_REG28	Interrupt Channel Map Register for 112 to 112+3
0x474	CH_MAP_REG29	Interrupt Channel Map Register for 116 to 116+3
0x478	CH_MAP_REG30	Interrupt Channel Map Register for 120 to 120+3
0x47c	CH_MAP_REG31	Interrupt Channel Map Register for 124 to 124+3
0x480	CH_MAP_REG32	Interrupt Channel Map Register for 128 to 128+3
0x484	CH_MAP_REG33	Interrupt Channel Map Register for 132 to 132+3
0x488	CH_MAP_REG34	Interrupt Channel Map Register for 136 to 136+3
0x48c	CH_MAP_REG35	Interrupt Channel Map Register for 140 to 140+3
0x490	CH_MAP_REG36	Interrupt Channel Map Register for 144 to 144+3
0x494	CH_MAP_REG37	Interrupt Channel Map Register for 148 to 148+3
0x498	CH_MAP_REG38	Interrupt Channel Map Register for 152 to 152+3
0x49c	CH_MAP_REG39	Interrupt Channel Map Register for 156 to 156+3
0x800	HINT_MAP_REG0	Host Interrupt Map Register for 0 to 0+3
0x804	HINT_MAP_REG1	Host Interrupt Map Register for 4 to 4+3

Copyright 2014 Texas Instruments Incorporated

Table 7-42 CIC0/CIC1 Register

Address Offset	Register Mnemonic	Register Name
0x808	HINT_MAP_REG2	Host Interrupt Map Register for 8 to 8+3
0x80c	HINT_MAP_REG3	Host Interrupt Map Register for 12 to 12+3
0x810	HINT_MAP_REG4	Host Interrupt Map Register for 16 to 16+3
0x814	HINT_MAP_REG5	Host Interrupt Map Register for 20 to 20+3
0x818	HINT_MAP_REG6	Host Interrupt Map Register for 24 to 24+3
0x81c	HINT_MAP_REG7	Host Interrupt Map Register for 28 to 28+3
0x820	HINT_MAP_REG8	Host Interrupt Map Register for 32 to 32+3
0x824	HINT_MAP_REG9	Host Interrupt Map Register for 36 to 36+3
0x828	HINT_MAP_REG10	Host Interrupt Map Register for 40 to 40+3
0x82c	HINT_MAP_REG11	Host Interrupt Map Register for 44 to 44+3
0x830	HINT_MAP_REG12	Host Interrupt Map Register for 48 to 48+3
0x834	HINT_MAP_REG13	Host Interrupt Map Register for 52 to 52+3
0x838	HINT_MAP_REG14	Host Interrupt Map Register for 56 to 56+3
0x83c	HINT_MAP_REG15	Host Interrupt Map Register for 60 to 60+3
0x840	HINT_MAP_REG16	Host Interrupt Map Register for 64 to 64+3
0x844	HINT_MAP_REG17	Host Interrupt Map Register for 68 to 68+3
0x848	HINT_MAP_REG18	Host Interrupt Map Register for 72 to 72+3
0x1500	ENABLE_HINT_REG0	Host Int Enable Register 0
0x1504	ENABLE_HINT_REG1	Host Int Enable Register 1
0x1508	ENABLE_HINT_REG2	Host Int Enable Register 2
End of Table 7-42		

7.10.2.2 CIC2 Register Map

Table 7-43 CIC2 Register

Address Offset	Register Mnemonic	Register Name
0x0	REVISION_REG	Revision Register
0x10	GLOBAL_ENABLE_HINT_REG	Global Host Int Enable Register
0x20	STATUS_SET_INDEX_REG	Status Set Index Register
0x24	STATUS_CLR_INDEX_REG	Status Clear Index Register
0x28	ENABLE_SET_INDEX_REG	Enable Set Index Register
0x2c	ENABLE_CLR_INDEX_REG	Enable Clear Index Register
0x34	HINT_ENABLE_SET_INDEX_REG	Host Int Enable Set Index Register
0x38	HINT_ENABLE_CLR_INDEX_REG	Host Int Enable Clear Index Register
0x200	RAW_STATUS_REG0	Raw Status Register 0
0x204	RAW_STATUS_REG1	Raw Status Register 1
0x208	RAW_STATUS_REG2	Raw Status Register 2
0x20c	RAW_STATUS_REG3	Raw Status Register 3
0x210	RAW_STATUS_REG4	Raw Status Register 4
0x280	ENA_STATUS_REG0	Enabled Status Register 0
0x284	ENA_STATUS_REG1	Enabled Status Register 1
0x288	ENA_STATUS_REG2	Enabled Status Register 2
0x28c	ENA_STATUS_REG3	Enabled Status Register 3
0x290	ENA_STATUS_REG4	Enabled Status Register 4

Copyright 2014 Texas Instruments Incorporated

Table 7-43 CIC2 Register

Address Offset	Register Mnemonic	Register Name
0x300	ENABLE_REG0	Enable Register 0
0x304	ENABLE_REG1	Enable Register 1
0x308	ENABLE_REG2	Enable Register 2
0x30c	ENABLE_REG3	Enable Register 3
0x310	ENABLE_REG4	Enable Register 4
0x380	ENABLE_CLR_REG0	Enable Clear Register 0
0x384	ENABLE_CLR_REG1	Enable Clear Register 1
0x388	ENABLE_CLR_REG2	Enable Clear Register 2
0x38c	ENABLE_CLR_REG3	Enable Clear Register 3
0x390	ENABLE_CLR_REG4	Enable Clear Register 4
0x400	CH_MAP_REG0	Interrupt Channel Map Register for 0 to 0+3
0x404	CH_MAP_REG1	Interrupt Channel Map Register for 4 to 4+3
0x408	CH_MAP_REG2	Interrupt Channel Map Register for 8 to 8+3
0x40c	CH_MAP_REG3	Interrupt Channel Map Register for 12 to 12+3
0x410	CH_MAP_REG4	Interrupt Channel Map Register for 16 to 16+3
0x414	CH_MAP_REG5	Interrupt Channel Map Register for 20 to 20+3
0x418	CH_MAP_REG6	Interrupt Channel Map Register for 24 to 24+3
0x41c	CH_MAP_REG7	Interrupt Channel Map Register for 28 to 28+3
0x420	CH_MAP_REG8	Interrupt Channel Map Register for 32 to 32+3
0x424	CH_MAP_REG9	Interrupt Channel Map Register for 36 to 36+3
0x428	CH_MAP_REG10	Interrupt Channel Map Register for 40 to 40+3
0x42c	CH_MAP_REG11	Interrupt Channel Map Register for 44 to 44+3
0x430	CH_MAP_REG12	Interrupt Channel Map Register for 48 to 48+3
0x434	CH_MAP_REG13	Interrupt Channel Map Register for 52 to 52+3
0x438	CH_MAP_REG14	Interrupt Channel Map Register for 56 to 56+3
0x43c	CH_MAP_REG15	Interrupt Channel Map Register for 60 to 60+3
0x440	CH_MAP_REG16	Interrupt Channel Map Register for 64 to 64+3
0x444	CH_MAP_REG17	Interrupt Channel Map Register for 68 to 68+3
0x448	CH_MAP_REG18	Interrupt Channel Map Register for 72 to 72+3
0x44c	CH_MAP_REG19	Interrupt Channel Map Register for 76 to 76+3
0x450	CH_MAP_REG20	Interrupt Channel Map Register for 80 to 80+3
0x454	CH_MAP_REG21	Interrupt Channel Map Register for 84 to 84+3
0x458	CH_MAP_REG22	Interrupt Channel Map Register for 88 to 88+3
0x45c	CH_MAP_REG23	Interrupt Channel Map Register for 92 to 92+3
0x460	CH_MAP_REG24	Interrupt Channel Map Register for 96 to 96+3
0x464	CH_MAP_REG25	Interrupt Channel Map Register for 100 to 100+3
0x468	CH_MAP_REG26	Interrupt Channel Map Register for 104 to 104+3
0x46c	CH_MAP_REG27	Interrupt Channel Map Register for 108 to 108+3
0x470	CH_MAP_REG28	Interrupt Channel Map Register for 112 to 112+3
0x474	CH_MAP_REG29	Interrupt Channel Map Register for 116 to 116+3
0x478	CH_MAP_REG30	Interrupt Channel Map Register for 120 to 120+3
0x47c	CH_MAP_REG31	Interrupt Channel Map Register for 124 to 124+3
0x480	CH_MAP_REG32	Interrupt Channel Map Register for 128 to 128+3

Copyright 2014 Texas Instruments Incorporated

Table 7-43 CIC2 Register

Address Offset	Register Mnemonic	Register Name
0x484	CH_MAP_REG33	Interrupt Channel Map Register for 132 to 132+3
0x488	CH_MAP_REG34	Interrupt Channel Map Register for 136 to 136+3
0x48c	CH_MAP_REG35	Interrupt Channel Map Register for 140 to 140+3
0x490	CH_MAP_REG36	Interrupt Channel Map Register for 144 to 144+3
0x494	CH_MAP_REG37	Interrupt Channel Map Register for 148 to 148+3
0x498	CH_MAP_REG38	Interrupt Channel Map Register for 152 to 152+3
0x49c	CH_MAP_REG39	Interrupt Channel Map Register for 156 to 156+3
0x800	HINT_MAP_REG0	Host Interrupt Map Register for 0 to 0+3
0x804	HINT_MAP_REG1	Host Interrupt Map Register for 4 to 4+3
0x808	HINT_MAP_REG2	Host Interrupt Map Register for 8 to 8+3
0x80c	HINT_MAP_REG3	Host Interrupt Map Register for 12 to 12+3
0x810	HINT_MAP_REG4	Host Interrupt Map Register for 16 to 16+3
0x814	HINT_MAP_REG5	Host Interrupt Map Register for 20 to 20+3
0x818	HINT_MAP_REG6	Host Interrupt Map Register for 24 to 24+3
0x81c	HINT_MAP_REG7	Host Interrupt Map Register for 28 to 28+3
0x820	HINT_MAP_REG8	Host Interrupt Map Register for 32 to 32+3
0x824	HINT_MAP_REG9	Host Interrupt Map Register for 36 to 36+3
0x828	HINT_MAP_REG10	Host Interrupt Map Register for 40 to 40+3
0x82c	HINT_MAP_REG11	Host Interrupt Map Register for 44 to 44+3
0x830	HINT_MAP_REG12	Host Interrupt Map Register for 48 to 48+3
0x1500	ENABLE_HINT_REG0	Host Int Enable Register 0
0x1504	ENABLE_HINT_REG1	Host Int Enable Register 1
End of Table 7-43		

7.10.2.3 CIC3 Register Map

Table 7-44 CIC3 Register

Address Offset	Register Mnemonic	Register Name
0x0	REVISION_REG	Revision Register
0x10	GLOBAL_ENABLE_HINT_REG	Global Host Int Enable Register
0x20	STATUS_SET_INDEX_REG	Status Set Index Register
0x24	STATUS_CLR_INDEX_REG	Status Clear Index Register
0x28	ENABLE_SET_INDEX_REG	Enable Set Index Register
0x2c	ENABLE_CLR_INDEX_REG	Enable Clear Index Register
0x34	HINT_ENABLE_SET_INDEX_REG	Host Int Enable Set Index Register
0x38	HINT_ENABLE_CLR_INDEX_REG	Host Int Enable Clear Index Register
0x200	RAW_STATUS_REG0	Raw Status Register 0
0x204	RAW_STATUS_REG1	Raw Status Register 1
0x280	ENA_STATUS_REG0	Enabled Status Register 0
0x284	ENA_STATUS_REG1	Enabled Status Register 1
0x300	ENABLE_REG0	Enable Register 0
0x304	ENABLE_REG1	Enable Register 1
0x380	ENABLE_CLR_REG0	Enable Clear Register 0
0x384	ENABLE_CLR_REG1	Enable Clear Register 1

Copyright 2014 Texas Instruments Incorporated

Table 7-44 CIC3 Register

Address Offset	Register Mnemonic	Register Name
0x400	CH_MAP_REG0	Interrupt Channel Map Register for 0 to 0+3
0x404	CH_MAP_REG1	Interrupt Channel Map Register for 4 to 4+3
0x408	CH_MAP_REG2	Interrupt Channel Map Register for 8 to 8+3
0x40c	CH_MAP_REG3	Interrupt Channel Map Register for 12 to 12+3
0x410	CH_MAP_REG4	Interrupt Channel Map Register for 16 to 16+3
0x414	CH_MAP_REG5	Interrupt Channel Map Register for 20 to 20+3
0x418	CH_MAP_REG6	Interrupt Channel Map Register for 24 to 24+3
0x41c	CH_MAP_REG7	Interrupt Channel Map Register for 28 to 28+3
0x420	CH_MAP_REG8	Interrupt Channel Map Register for 32 to 32+3
0x424	CH_MAP_REG9	Interrupt Channel Map Register for 36 to 36+3
0x428	CH_MAP_REG10	Interrupt Channel Map Register for 40 to 40+3
0x42c	CH_MAP_REG11	Interrupt Channel Map Register for 44 to 44+3
0x430	CH_MAP_REG12	Interrupt Channel Map Register for 48 to 48+3
0x434	CH_MAP_REG13	Interrupt Channel Map Register for 52 to 52+3
0x438	CH_MAP_REG14	Interrupt Channel Map Register for 56 to 56+3
0x43c	CH_MAP_REG15	Interrupt Channel Map Register for 60 to 60+3
0x800	HINT_MAP_REG0	Host Interrupt Map Register for 0 to 0+3
0x804	HINT_MAP_REG1	Host Interrupt Map Register for 4 to 4+3
0x808	HINT_MAP_REG2	Host Interrupt Map Register for 8 to 8+3
0x80c	HINT_MAP_REG3	Host Interrupt Map Register for 12 to 12+3
0x810	HINT_MAP_REG4	Host Interrupt Map Register for 16 to 16+3
0x814	HINT_MAP_REG5	Host Interrupt Map Register for 20 to 20+3
0x818	HINT_MAP_REG6	Host Interrupt Map Register for 24 to 24+3
0x81c	HINT_MAP_REG7	Host Interrupt Map Register for 28 to 28+3
0x820	HINT_MAP_REG8	Host Interrupt Map Register for 32 to 32+3
0x824	HINT_MAP_REG9	Host Interrupt Map Register for 36 to 36+3
0x1500	ENABLE_HINT_REG0	Host Int Enable Register 0
0x1504	ENABLE_HINT_REG1	Host Int Enable Register 1
End of Table 7-44		

7.10.3 Inter-Processor Register Map

Table 7-45 IPC Generation Registers (IPCGRx) (Sheet 1 of 2)

Address Start	Address End	Size	Register Name	Description
0x02620200	0x02620203	4B	NMIGR0	NMI Event Generation Register for CorePac0
0x02620204	0x02620207	4B	NMIGR1	NMI Event Generation Register for CorePac1
0x02620208	0x0262020B	4B	NMIGR2	NMI Event Generation Register for CorePac2
0x0262020C	0x0262020F	4B	NMIGR3	NMI Event Generation Register for CorePac3
0x02620210	0x02620213	4B	NMIGR4	NMI Event Generation Register for CorePac4
0x02620214	0x02620217	4B	NMIGR5	NMI Event Generation Register for CorePac5
0x02620218	0x0262021B	4B	NMIGR6	NMI Event Generation Register for CorePac6
0x0262021C	0x0262021F	4B	NMIGR7	NMI Event Generation Register for CorePac7
0x02620220	0x0262023F	32B	Reserved	Reserved
0x02620240	0x02620243	4B	IPCGR0	IPC Generation Register for CorePac0

Copyright 2014 Texas Instruments Incorporated

Table 7-45 IPC Generation Registers (IPCGRx) (Sheet 2 of 2)

Address Start	Address End	Size	Register Name	Description
0x02620244	0x02620247	4B	IPCGR1	IPC Generation Register for CorePac1
0x02620248	0x0262024B	4B	IPCGR2	IPC Generation Register for CorePac2
0x0262024C	0x0262024F	4B	IPCGR3	IPC Generation Register for CorePac3
0x02620250	0x02620253	4B	IPCGR4	IPC Generation Register for CorePac4
0x02620254	0x02620257	4B	IPCGR5	IPC Generation Register for CorePac5
0x02620258	0x0262025B	4B	IPCGR6	IPC Generation Register for CorePac6
0x0262025C	0x0262025F	4B	IPCGR7	IPC Generation Register for CorePac7
0x02620260	0x0262027B	28B	Reserved	Reserved
0x0262027C	0x0262027F	4B	IPCGRH	IPC Generation Register for Host
0x02620280	0x02620283	4B	IPCAR0	IPC Acknowledgement Register for CorePac0
0x02620284	0x02620287	4B	IPCAR1	IPC Acknowledgement Register for CorePac1
0x02620288	0x0262028B	4B	IPCAR2	IPC Acknowledgement Register for CorePac2
0x0262028C	0x0262028F	4B	IPCAR3	IPC Acknowledgement Register for CorePac3
0x02620290	0x02620293	4B	IPCAR4	IPC Acknowledgement Register for CorePac4
0x02620294	0x02620297	4B	IPCAR5	IPC Acknowledgement Register for CorePac5
0x02620298	0x0262029B	4B	IPCAR6	IPC Acknowledgement Register for CorePac6
0x0262029C	0x0262029F	4B	IPCAR7	IPC Acknowledgement Register for CorePac7
0x026202A0	0x026202BB	28B	Reserved	Reserved
0x026202BC	0x026202BF	4B	IPCARH	IPC Acknowledgement Register for Host
End of Table 7-45				

7.10.4 $\overline{\text{NMI}}$ and $\overline{\text{LRESET}}$

Non-maskable interrupts ($\overline{\text{NMI}}$) can be generated by chip-level registers and the $\overline{\text{LRESET}}$ can be generated by software writing into LPSC registers. $\overline{\text{LRESET}}$ and $\overline{\text{NMI}}$ can also be asserted by device pins or watchdog timers. One $\overline{\text{NMI}}$ pin and one $\overline{\text{LRESET}}$ pin are shared by all CorePacs on the device. The CORESEL[3:0] pins can be configured to select between the CorePacs available as shown in Table 7-46.

Table 7-46 $\overline{\text{LRESET}}$ and $\overline{\text{NMI}}$ Decoding (Sheet 1 of 2)

CORESEL[3:0] Pin Input	$\overline{\text{LRESET}}$ Pin Input	$\overline{\text{NMI}}$ Pin Input	$\overline{\text{LRESETNMIEN}}$ Pin Input	Reset Mux Block Output
XXXX	X	X	1	No local reset or $\overline{\text{NMI}}$ assertion.
0000	0	X	0	Assert local reset to CorePac0
0001	0	X	0	Assert local reset to CorePac1
0010	0	X	0	Assert local reset to CorePac2
0011	0	X	0	Assert local reset to CorePac3
0100	0	X	0	Assert local reset to CorePac4
0101	0	X	0	Assert local reset to CorePac5
0110	0	X	0	Assert local reset to CorePac6
0111	0	X	0	Assert local reset to CorePac7
1xxx	0	X	0	Assert local reset to all CorePacs
0000	1	1	0	De-assert local reset & $\overline{\text{NMI}}$ to CorePac0
0001	1	1	0	De-assert local reset & $\overline{\text{NMI}}$ to CorePac1
0010	1	1	0	De-assert local reset & $\overline{\text{NMI}}$ to CorePac2
0011	1	1	0	De-assert local reset & $\overline{\text{NMI}}$ to CorePac3

Table 7-46 $\overline{\text{LRESET}}$ and $\overline{\text{NMI}}$ Decoding (Sheet 2 of 2)

CORESEL[3:0] Pin Input	$\overline{\text{LRESET}}$ Pin Input	$\overline{\text{NMI}}$ Pin Input	$\overline{\text{LRESETNMIEN}}$ Pin Input	Reset Mux Block Output
0100	1	1	0	De-assert local reset & $\overline{\text{NMI}}$ to CorePac4
0101	1	1	0	De-assert local reset & $\overline{\text{NMI}}$ to CorePac5
0110	1	1	0	De-assert local reset & $\overline{\text{NMI}}$ to CorePac6
0111	1	1	0	De-assert local reset & $\overline{\text{NMI}}$ to CorePac7
1xxx	1	1	0	De-assert local reset & $\overline{\text{NMI}}$ to all CorePacs
0000	1	0	0	Assert $\overline{\text{NMI}}$ to CorePac0
0001	1	0	0	Assert $\overline{\text{NMI}}$ to CorePac1
0010	1	0	0	Assert $\overline{\text{NMI}}$ to CorePac2
0011	1	0	0	Assert $\overline{\text{NMI}}$ to CorePac3
0100	1	0	0	Assert $\overline{\text{NMI}}$ to CorePac4
0101	1	0	0	Assert $\overline{\text{NMI}}$ to CorePac5
0110	1	0	0	Assert $\overline{\text{NMI}}$ to CorePac6
0111	1	0	0	Assert $\overline{\text{NMI}}$ to CorePac7
1xxx	1	0	0	Assert $\overline{\text{NMI}}$ to all CorePacs
End of Table 7-46				

7.10.5 External Interrupts Electrical Data/Timing

Table 7-47 NMI and Local Reset Timing Requirements [1]
(see Figure 7-33)

No.			Min	Max	Unit
1	tsu($\overline{\text{LRESET}}$-$\overline{\text{LRESETNMIENL}}$)	Setup Time - $\overline{\text{LRESET}}$ valid before $\overline{\text{LRESETNMIEN}}$ low	12*P		ns
1	tsu($\overline{\text{NMI}}$-$\overline{\text{LRESETNMIENL}}$)	Setup Time - $\overline{\text{NMI}}$ valid before $\overline{\text{LRESETNMIEN}}$ low	12*P		ns
1	tsu(CORESELn-$\overline{\text{LRESETNMIENL}}$)	Setup Time - CORESEL[2:0] valid before $\overline{\text{LRESETNMIEN}}$ low	12*P		ns
2	th($\overline{\text{LRESETNMIENL}}$-$\overline{\text{LRESET}}$)	Hold Time - $\overline{\text{LRESET}}$ valid after $\overline{\text{LRESETNMIEN}}$ high	12*P		ns
2	th($\overline{\text{LRESETNMIENL}}$-$\overline{\text{NMI}}$)	Hold Time - $\overline{\text{NMI}}$ valid after $\overline{\text{LRESETNMIEN}}$ high	12*P		ns
2	th($\overline{\text{LRESETNMIENL}}$-CORESELn)	Hold Time - CORESEL[2:0] valid after $\overline{\text{LRESETNMIEN}}$ high	12*P		ns
3	tw($\overline{\text{LRESETNMIEN}}$)	Pulse Width - $\overline{\text{LRESETNMIEN}}$ low width	12*P		ns
End of Table 7-47					

1 P = 1/SYSCLK1 frequency in ns.

Figure 7-33 NMI and Local Reset Timing

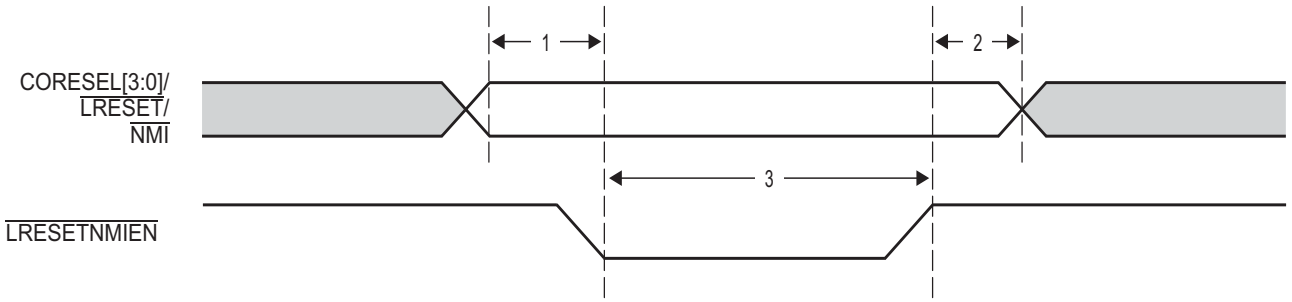

Copyright 2014 Texas Instruments Incorporated

7.10.6 Host Interrupt Output

The C66x CorePac can assert an event to the external host processor using HOUT. Table 7-48 shows the timing for the HOUT pulse. For more details, see section 3.3.15 .

Table 7-48 HOUT Switching Characteristics
(see Figure 7-34)

No.			Min	Max	Unit
1	$t_{w(HOUTH)}$	HOUT pulse duration high	24*P [1]		ns
2	$t_{w(HOUTL)}$	HOUT pulse duration low	24*P		ns
End of Table 7-48					

1 P = 1/SYSCLK1 frequency in ns.

Figure 7-34 HOUT Timing

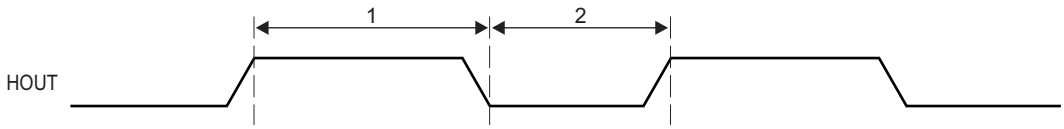

7.11 Memory Protection Unit (MPU)

The C6678 supports four MPUs:

- One MPU is used to protect the main CORE/3 CFG TeraNet (the CFG space of all slave devices on the TeraNet is protected by the MPU).
- Two MPUs are used for QM_SS (one for the DATA PORT port and one for the CFG PORT port).
- One MPU is used for Semaphore.

This section contains MPU register map and details of device-specific MPU registers only. For MPU features and details of generic MPU registers, see the *Memory Protection Unit (MPU) for KeyStone Devices User Guide* in "Related Documentation from Texas Instruments" on page 72.

The following tables show the configuration of each MPU and the memory regions protected by each MPU.

Table 7-49 MPU Default Configuration

Setting	MPU0 (Main CFG TeraNet)	MPU1 (QM_SS DATA PORT)	MPU2 (QM_SS CFG PORT)	MPU3 (Semaphore)
Default permission	Assume allowed	Assume allowed	Assume allowed	Assume allowed
Number of allowed IDs supported	16	16	16	16
Number of programmable ranges supported	16	5	16	1
Compare width	1KB granularity	1KB granularity	1KB granularity	1KB granularity
End of Table 7-49				

Table 7-50 MPU Memory Regions

	Memory Protection	Start Address	End Address
MPU0	Main CFG TeraNet	0x01D00000	0x026207FF
MPU1	QM_SS DATA PORT	0x34000000	0x340BFFFF
MPU2	QM_SS CFG PORT	0x02A00000	0x02ABFFFF
MPU3	Semaphore	0x02640000	0x026407FF

Table 7-51 shows the privilege ID of each CORE and every mastering peripheral. Table 7-51 also shows the privilege level (supervisor vs. user), security level (secure vs. non-secure), and access type (instruction read vs. data/DMA read or write) of each master on the device. In some cases, a particular setting depends on software being executed at the time of the access or the configuration of the master peripheral.

Table 7-51 Privilege ID Settings (Sheet 1 of 2)

Privilege ID	Master	Privilege Level	Security Level	Access Type
0	CorePac0	SW dependant, driven by MSMC	SW dependant	DMA
1	CorePac1	SW dependant, driven by MSMC	SW dependant	DMA
2	CorePac2	SW dependant, driven by MSMC	SW dependant	DMA
3	CorePac3	SW dependant, driven by MSMC	SW dependant	DMA
4	CorePac4	SW dependant, driven by MSMC	SW dependant	DMA
5	CorePac5	SW dependant, driven by MSMC	SW dependant	DMA
6	CorePac6	SW dependant, driven by MSMC	SW dependant	DMA
7	CorePac7	SW dependant, driven by MSMC	SW dependant	DMA
8	Network Coprocessor Packet DMA	User	Non-secure	DMA

Copyright 2014 Texas Instruments Incorporated

Table 7-51 Privilege ID Settings (Sheet 2 of 2)

Privilege ID	Master	Privilege Level	Security Level	Access Type
9	SRIO Packet DMA/SRIO_M	User/Driven by SRIO block, User mode and supervisor mode is determined on a per-transaction basis. Only the transaction with source ID matching the value in the SupervisorID register is granted supervisor mode.	Non-secure	DMA
10	QM_SS Packet DMA/QM_SS Second	User	Non-secure	DMA
11	PCIe	Driven by PCIe module	Non-secure	DMA
12	Debug_SS	Driven by Debug_SS	Driven by Debug_SS	DMA
13	HyperLink	Driven by HyperLink	Non-secure	DMA
14	HyperLink	Supervisor	Non-secure	DMA
15	TSIP0/1	User	Non-secure	DMA
End of Table 7-51				

Table 7-52 shows the master ID of each CorePac and every mastering peripheral. Master IDs are used to determine allowed connections between masters and slaves. Unlike privilege IDs, which can be shared across different masters, master IDs are unique to each master.

Table 7-52 Master ID Settings (Sheet 1 of 3) (1)

Master ID	Master
0	CorePac0
1	CorePac1
2	CorePac2
3	CorePac3
4	CorePac4
5	CorePac5
6	CorePac6
7	CorePac7
8	CorePac0_CFG
9	CorePac1_CFG
10	CorePac2_CFG
11	CorePac3_CFG
12	CorePac4_CFG
13	CorePac5_CFG
14	CorePac6_CFG
15	CorePac7_CFG
16	EDMA0_TC0 read
17	EDMA0_TC0 write
18	EDMA0_TC1 read
19	EDMA0_TC1 write
20	EDMA1_TC0 read
21	EDMA1_TC0 write
22	EDMA1_TC1 read
23	EDMA1_TC1 write
24	EDMA1_TC2 read
25	EDMA1_TC2 write

Table 7-52 Master ID Settings (Sheet 2 of 3) [1]

Master ID	Master
26	EDMA1_TC3 read
27	EDMA1_TC3 write
28	EDMA2_TC0 read
29	EDMA2_TC0 write
30	EDMA2_TC1 read
31	EDMA2_TC1 write
32	EDMA2_TC2 read
33	EDMA2_TC2 write
34	EDMA2_TC3 read
35	EDMA2_TC3 write
36 - 37	Reserved
38 - 39	SRIO Packet DMA
40 - 47	Reserved
48	Debug SS
49	EDMA3CC0
50	EDMA3CC1
51	EDMA3CC2
52	MSMC [2]
53	PCIe
54	SRIO_Master
55	HyperLink
56 - 59	Network Coprocessor Packet DMA
60 - 85	Reserved
86	TSIP0
87	TSIP1
88 - 91	Queue Manager Packet DMA
92 - 93	Queue Manager Second
94 - 127	Reserved
128	Tracer_core_0 [3]
129	Tracer_core_1
130	Tracer_core_2
131	Tracer_core_3
132	Tracer_core_4
133	Tracer_core_5
134	Tracer_core_6
135	Tracer_core_7
136	Tracer_MSMC0
137	Tracer_MSMC1
138	Tracer_MSMC2
139	Tracer_MSMC3
140	Tracer_DDR
141	Tracer_SM
142	Tracer_QM_CFG

Copyright 2014 Texas Instruments Incorporated

Table 7-52 Master ID Settings (Sheet 3 of 3) (1)

Master ID	Master
143	Tracer_QM_DMA
144	Tracer_CFG
End of Table 7-52	

1 Some of the Packet DMA-based peripherals require multiple master IDs. Queue Manager Packet DMA is assigned with 88, 89, 90, 91, but only 88 - 89 are actually used. For the network coprocessor packet DMA port, 56, 57, 58, and 59 are assigned, while only one (56) is actually used. There are two master ID values assigned for the queue manager second master port: one master ID for external linking RAM and the other master ID for PDSP/MCDM accesses.

2 The master ID for MSMC is for the transactions initiated by MSMC internally and sent to the DDR.

3 All traces are set to the same master ID and bit 7 of the master ID must be 1.

7.11.1 MPU Registers

This section includes the offsets for MPU registers and definitions for device-specific MPU registers.

7.11.1.1 MPU Register Map

Table 7-53 MPU0 Registers (Sheet 1 of 2)

Offset	Name	Description
0h	REVID	Revision ID
4h	CONFIG	Configuration
10h	IRAWSTAT	Interrupt raw status/set
14h	IENSTAT	Interrupt enable status/clear
18h	IENSET	Interrupt enable
1Ch	IENCLR	Interrupt enable clear
20h	EOI	End of interrupt
200h	PROG0_MPSAR	Programmable range 0, start address
204h	PROG0_MPEAR	Programmable range 0, end address
208h	PROG0_MPPA	Programmable range 0, memory page protection attributes
210h	PROG1_MPSAR	Programmable range 1, start address
214h	PROG1_MPEAR	Programmable range 1, end address
218h	PROG1_MPPA	Programmable range 1, memory page protection attributes
220h	PROG2_MPSAR	Programmable range 2, start address
224h	PROG2_MPEAR	Programmable range 2, end address
228h	PROG2_MPPA	Programmable range 2, memory page protection attributes
230h	PROG3_MPSAR	Programmable range 3, start address
234h	PROG3_MPEAR	Programmable range 3, end address
238h	PROG3_MPPA	Programmable range 3, memory page protection attributes
240h	PROG4_MPSAR	Programmable range 4, start address
244h	PROG4_MPEAR	Programmable range 4, end address
248h	PROG4_MPPA	Programmable range 4, memory page protection attributes
250h	PROG5_MPSAR	Programmable range 5, start address
254h	PROG5_MPEAR	Programmable range 5, end address
258h	PROG5_MPPA	Programmable range 5, memory page protection attributes
260h	PROG6_MPSAR	Programmable range 6, start address
264h	PROG6_MPEAR	Programmable range 6, end address
268h	PROG6_MPPA	Programmable range 6, memory page protection attributes
270h	PROG7_MPSAR	Programmable range 7, start address

Table 7-53 MPU0 Registers (Sheet 2 of 2)

Offset	Name	Description
274h	PROG7_MPEAR	Programmable range 7, end address
278h	PROG7_MPPA	Programmable range 7, memory page protection attributes
280h	PROG8_MPSAR	Programmable range 8, start address
284h	PROG8_MPEAR	Programmable range 8, end address
288h	PROG8_MPPA	Programmable range 8, memory page protection attributes
290h	PROG9_MPSAR	Programmable range 9, start address
294h	PROG9_MPEAR	Programmable range 9, end address
298h	PROG9_MPPA	Programmable range 9, memory page protection attributes
2A0h	PROG10_MPSAR	Programmable range 10, start address
2A4h	PROG10_MPEAR	Programmable range 10, end address
2A8h	PROG10_MPPA	Programmable range 10, memory page protection attributes
2B0h	PROG11_MPSAR	Programmable range 11, start address
2B4h	PROG11_MPEAR	Programmable range 11, end address
2B8h	PROG11_MPPA	Programmable range 11, memory page protection attributes
2C0h	PROG12_MPSAR	Programmable range 12, start address
2C4h	PROG12_MPEAR	Programmable range 12, end address
2C8h	PROG12_MPPA	Programmable range 12, memory page protection attributes
2D0h	PROG13_MPSAR	Programmable range 13, start address
2D4h	PROG13_MPEAR	Programmable range 13, end address
2Dh	PROG13_MPPA	Programmable range 13, memory page protection attributes
2E0h	PROG14_MPSAR	Programmable range 14, start address
2E4h	PROG14_MPEAR	Programmable range 14, end address
2E8h	PROG14_MPPA	Programmable range 14, memory page protection attributes
2F0h	PROG15_MPSAR	Programmable range 15, start address
2F4h	PROG15_MPEAR	Programmable range 15, end address
2F8h	PROG15_MPPA	Programmable range 15, memory page protection attributes
300h	FLTADDRR	Fault address
304h	FLTSTAT	Fault status
308h	FLTCLR	Fault clear
End of Table 7-53		

Table 7-54 MPU1 Registers (Sheet 1 of 2)

Offset	Name	Description
0h	REVID	Revision ID
4h	CONFIG	Configuration
10h	IRAWSTAT	Interrupt raw status/set
14h	IENSTAT	Interrupt enable status/clear
18h	IENSET	Interrupt enable
1Ch	IENCLR	Interrupt enable clear
20h	EOI	End of interrupt
200h	PROG0_MPSAR	Programmable range 0, start address
204h	PROG0_MPEAR	Programmable range 0, end address
208h	PROG0_MPPA	Programmable range 0, memory page protection attributes

Copyright 2014 Texas Instruments Incorporated

Table 7-54 MPU1 Registers (Sheet 2 of 2)

Offset	Name	Description
210h	PROG1_MPSAR	Programmable range 1, start address
214h	PROG1_MPEAR	Programmable range 1, end address
218h	PROG1_MPPA	Programmable range 1, memory page protection attributes
220h	PROG2_MPSAR	Programmable range 2, start address
224h	PROG2_MPEAR	Programmable range 2, end address
228h	PROG2_MPPA	Programmable range 2, memory page protection attributes
230h	PROG3_MPSAR	Programmable range 3, start address
234h	PROG3_MPEAR	Programmable range 3, end address
238h	PROG3_MPPA	Programmable range 3, memory page protection attributes
240h	PROG4_MPSAR	Programmable range 4, start address
244h	PROG4_MPEAR	Programmable range 4, end address
248h	PROG4_MPPA	Programmable range 4, memory page protection attributes
300h	FLTADDRR	Fault address
304h	FLTSTAT	Fault status
308h	FLTCLR	Fault clear
End of Table 7-54		

Table 7-55 MPU2 Registers (Sheet 1 of 2)

Offset	Name	Description
0h	REVID	Revision ID
4h	CONFIG	Configuration
10h	IRAWSTAT	Interrupt raw status/set
14h	IENSTAT	Interrupt enable status/clear
18h	IENSET	Interrupt enable
1Ch	IENCLR	Interrupt enable clear
20h	EOI	End of interrupt
200h	PROG0_MPSAR	Programmable range 0, start address
204h	PROG0_MPEAR	Programmable range 0, end address
208h	PROG0_MPPA	Programmable range 0, memory page protection attributes
210h	PROG1_MPSAR	Programmable range 1, start address
214h	PROG1_MPEAR	Programmable range 1, end address
218h	PROG1_MPPA	Programmable range 1, memory page protection attributes
220h	PROG2_MPSAR	Programmable range 2, start address
224h	PROG2_MPEAR	Programmable range 2, end address
228h	PROG2_MPPA	Programmable range 2, memory page protection attributes
230h	PROG3_MPSAR	Programmable range 3, start address
234h	PROG3_MPEAR	Programmable range 3, end address
238h	PROG3_MPPA	Programmable range 3, memory page protection attributes
240h	PROG4_MPSAR	Programmable range 4, start address
244h	PROG4_MPEAR	Programmable range 4, end address
248h	PROG4_MPPA	Programmable range 4, memory page protection attributes
250h	PROG5_MPSAR	Programmable range 5, start address
254h	PROG5_MPEAR	Programmable range 5, end address

Table 7-55 MPU2 Registers (Sheet 2 of 2)

Offset	Name	Description
258h	PROG5_MPPA	Programmable range 5, memory page protection attributes
260h	PROG6_MPSAR	Programmable range 6, start address
264h	PROG6_MPEAR	Programmable range 6, end address
268h	PROG6_MPPA	Programmable range 6, memory page protection attributes
270h	PROG7_MPSAR	Programmable range 7, start address
274h	PROG7_MPEAR	Programmable range 7, end address
278h	PROG7_MPPA	Programmable range 7, memory page protection attributes
280h	PROG8_MPSAR	Programmable range 8, start address
284h	PROG8_MPEAR	Programmable range 8, end address
288h	PROG8_MPPA	Programmable range 8, memory page protection attributes
290h	PROG9_MPSAR	Programmable range 9, start address
294h	PROG9_MPEAR	Programmable range 9, end address
298h	PROG9_MPPA	Programmable range 9, memory page protection attributes
2A0h	PROG10_MPSAR	Programmable range 10, start address
2A4h	PROG10_MPEAR	Programmable range 10, end address
2A8h	PROG10_MPPA	Programmable range 10, memory page protection attributes
2B0h	PROG11_MPSAR	Programmable range 11, start address
2B4h	PROG11_MPEAR	Programmable range 11, end address
2B8h	PROG11_MPPA	Programmable range 11, memory page protection attributes
2C0h	PROG12_MPSAR	Programmable range 12, start address
2C4h	PROG12_MPEAR	Programmable range 12, end address
2C8h	PROG12_MPPA	Programmable range 12, memory page protection attributes
2D0h	PROG13_MPSAR	Programmable range 13, start address
2D4h	PROG13_MPEAR	Programmable range 13, end address
2Dh	PROG13_MPPA	Programmable range 13, memory page protection attributes
2E0h	PROG14_MPSAR	Programmable range 14, start address
2E4h	PROG14_MPEAR	Programmable range 14, end address
2E8h	PROG14_MPPA	Programmable range 14, memory page protection attributes
2F0h	PROG15_MPSAR	Programmable range 15, start address
2F4h	PROG15_MPEAR	Programmable range 15, end address
2F8h	PROG15_MPPA	Programmable range 15, memory page protection attributes
300h	FLTADDRR	Fault address
304h	FLTSTAT	Fault status
308h	FLTCLR	Fault clear
End of Table 7-55		

Table 7-56 MPU3 Registers (Sheet 1 of 2)

Offset	Name	Description
0h	REVID	Revision ID
4h	CONFIG	Configuration
10h	IRAWSTAT	Interrupt raw status/set
14h	IENSTAT	Interrupt enable status/clear
18h	IENSET	Interrupt enable

Copyright 2014 Texas Instruments Incorporated

Table 7-56 MPU3 Registers (Sheet 2 of 2)

Offset	Name	Description
1Ch	IENCLR	Interrupt enable clear
20h	EOI	End of interrupt
200h	PROG0_MPSAR	Programmable range 0, start address
204h	PROG0_MPEAR	Programmable range 0, end address
208h	PROG0_MPPA	Programmable range 0, memory page protection attributes
300h	FLTADDRR	Fault address
304h	FLTSTAT	Fault status
308h	FLTCLR	Fault clear
End of Table 7-56		

7.11.1.2 Device-Specific MPU Registers

7.11.1.2.1 Configuration Register (CONFIG)

The configuration register (CONFIG) contains the configuration value of the MPU.

Figure 7-35 Configuration Register (CONFIG)

		31–24	23–20	19–16	15–12	11–1	0
		ADDR_WIDTH	NUM_FIXED	NUM_PROG	NUM_AIDS	Reserved	ASSUME_ALLOWED
Reset Values	MPU0	R-0	R-0	R-16	R-16	R-0	R-1
	MPU1	R-0	R-0	R-5	R-16	R-0	R-1
	MPU2	R-0	R-0	R-16	R-16	R-0	R-1
	MPU3	R-0	R-0	R-1	R-16	R-0	R-1

Legend: R = Read only; -*n* = value after reset

Table 7-57 Configuration Register (CONFIG) Field Descriptions

Bit	Field	Description
31 – 24	ADDR_WIDTH	Address alignment for range checking 0 = 1KB alignment 6 = 64KB alignment
23 – 20	NUM_FIXED	Number of fixed address ranges
19 – 16	NUM_PROG	Number of programmable address ranges
15 – 12	NUM_AIDS	Number of supported AIDs
11 – 1	Reserved	Reserved. These bits will always reads as 0.
0	ASSUME_ALLOWED	Assume allowed bit. When an address is not covered by any MPU protection range, this bit determines whether the transfer is assumed to be allowed or not. 0 = Assume disallowed 1 = Assume allowed
End of Table 7-57		

7.11.2 MPU Programmable Range Registers

7.11.2.1 Programmable Range *n* Start Address Register (PROG*n*_MPSAR)

The programmable address start register holds the start address for the range. This register is writeable only by a supervisor entity. If NS = 0 (non-secure mode) in the associated MPPA register, then the register is also writeable only by a secure entity.

The start address must be aligned on a page boundary. The size of the page is 1K byte. The size of the page determines the width of the address field in MPSAR and MPEAR.

Figure 7-36 Programmable Range *n* Start Address Register (PROG*n*_MPSAR)

31 – 10	9 – 0
START_ADDR	Reserved
R/W	R

Legend: R = Read only; R/W = Read/Write

Table 7-58 Programmable Range *n* Start Address Register (PROG*n*_MPSAR) Field Descriptions

Bit	Field	Description
31 – 10	START_ADDR	Start address for range *n*.
9 – 0	Reserved	Reserved and these bits always read as 0.
End of Table 7-58		

7.11.2.2 Programmable Range *n* End Address Register (PROG*n*_MPEAR)

The programmable address end register holds the end address for the range. This register is writeable only by a supervisor entity. If NS = 0 (non-secure mode) in the associated MPPA register, then the register is also writeable only by a secure entity.

The end address must be aligned on a page boundary. The size of the page depends on the MPU number. The page size for MPU1 is 1K byte and for MPU2 it is 64K bytes. The size of the page determines the width of the address field in MPSAR and MPEAR

Figure 7-37 Programmable Range *n* End Address Register (PROG*n*_MPEAR)

31 – 10	9 – 0
END_ADDR	Reserved
R/W	R

Legend: R = Read only; R/W = Read/Write

Table 7-59 Programmable Range *n* End Address Register (PROG*n*_MPEAR) Field Descriptions

Bit	Field	Description
31 – 10	END_ADDR	End address for range *n*.
9 – 0	Reserved	Reserved and these bits always read as 3FFh.
End of Table 7-59		

Copyright 2014 Texas Instruments Incorporated

7.11.2.3 Programmable Range *n* Memory Protection Page Attribute Register (PROG*n*_MPPA)

The programmable address memory protection page attribute register holds the permissions for the region. This register is writeable only by a non-debug supervisor entity. If NS = 0 (secure mode), then the register is also writeable only by a non-debug secure entity. The NS bit is writeable only by a non-debug secure entity. For debug accesses, the register is writeable only when NS = 1 or EMU = 1.

Figure 7-38 Programmable Range *n* Memory Protection Page Attribute Register (PROG*n*_MPPA)

31	26	25	24	23	22	21	20	19	18	17	16	15
Reserved		AID15	AID14	AID13	AID12	AID11	AID10	AID9	AID8	AID7	AID6	AID5
R		R/W	R/W	R/W	R/W	R/W	R/W	R/W	R/W	R/W	R/W	R/W

14	13	12	11	10	9	8	7	6	5	4	3	2	1	0
AID4	AID3	AID2	AID1	AID0	AIDX	Reserved	NS	EMU	SR	SW	SX	UR	UW	UX
R/W	R/W	R/W	R/W	R/W	R/W	R	R/W	R/W	R/W	R/W	R/W	R/W	R/W	R/W

Legend: R = Read only; R/W = Read/Write

Table 7-60 Programmable Range *n* Memory Protection Page Attribute Register (PROG*n*_MPPA) Field Descriptions (Sheet 1 of 2)

Bit	Field	Description
31 – 26	Reserved	Reserved. These bits will always reads as 0.
25	AID15	Controls permission check of ID = 15 0 = AID is not checked for permissions 1 = AID is checked for permissions
24	AID14	Controls permission check of ID = 14 0 = AID is not checked for permissions 1 = AID is checked for permissions
23	AID13	Controls permission check of ID = 13 0 = AID is not checked for permissions 1 = AID is checked for permissions
22	AID12	Controls permission check of ID = 12 0 = AID is not checked for permissions 1 = AID is checked for permissions
21	AID11	Controls permission check of ID = 11 0 = AID is not checked for permissions 1 = AID is checked for permissions
20	AID10	Controls permission check of ID = 10 0 = AID is not checked for permissions 1 = AID is checked for permissions
19	AID9	Controls permission check of ID = 9 0 = AID is not checked for permissions 1 = AID is checked for permissions
18	AID8	Controls permission check of ID = 8 0 = AID is not checked for permissions 1 = AID is checked for permissions
17	AID7	Controls permission check of ID = 7 0 = AID is not checked for permissions 1 = AID is checked for permissions
16	AID6	Controls permission check of ID = 6 0 = AID is not checked for permissions 1 = AID is checked for permissions

Table 7-60 Programmable Range *n* Memory Protection Page Attribute Register (PROG*n*_MPPA) Field Descriptions (Sheet 2 of 2)

Bit	Field	Description
15	AID5	Controls permission check of ID = 5 0 = AID is not checked for permissions 1 = AID is checked for permissions
14	AID4	Controls permission check of ID = 4 0 = AID is not checked for permissions 1 = AID is checked for permissions
13	AID3	Controls permission check of ID = 3 0 = AID is not checked for permissions 1 = AID is checked for permissions
12	AID2	Controls permission check of ID = 2 0 = AID is not checked for permissions 1 = AID is checked for permissions
11	AID1	Controls permission check of ID = 1 0 = AID is not checked for permissions 1 = AID is checked for permissions
10	AID0	Controls permission check of ID = 0 0 = AID is not checked for permissions 1 = AID is checked for permissions
9	AIDX	Controls permission check of ID > 15 0 = AID is not checked for permissions 1 = AID is checked for permissions
8	Reserved	Always reads as 0.
7	NS	Non-secure access permission 0 = Only secure access allowed. 1 = Non-secure access allowed.
6	EMU	Emulation (debug) access permission. This bit is ignored if NS = 1 0 = Debug access not allowed. 1 = Debug access allowed.
5	SR	Supervisor Read permission 0 = Access not allowed. 1 = Access allowed.
4	SW	Supervisor Write permission 0 = Access not allowed. 1 = Access allowed.
3	SX	Supervisor Execute permission 0 = Access not allowed. 1 = Access allowed.
2	UR	User Read permission 0 = Access not allowed. 1 = Access allowed
1	UW	User Write permission 0 = Access not allowed. 1 = Access allowed.
0	UX	User Execute permission 0 = Access not allowed. 1 = Access allowed.
End of Table 7-601		

Copyright 2014 Texas Instruments Incorporated

7.11.2.4 MPU Registers Reset Values

Table 7-61 Programmable Range *n* Registers Reset Values for MPU0

Programmable Range	MPU0 (Main CFG TeraNet)			
	Start Address (PROGn_MPSAR)	End Address (PROGn_MPEAR)	Memory Page Protection Attribute (PROGn_MPPA)	Memory Protection
PROG0	0x01D0_0000	0x01D8_03FF	0x03FF_FCB6	Tracers
PROG1	0x01F0_0000	0x01F7_FFFF	0x03FF_FC80	Reserved
PROG2	0x0200_0000	0x0209_FFFF	0x03FF_FCB6	NETCP
PROG3	0x01E0_0000	0x01EB_FFFF	0x03FF_FCB6	TSIP
PROG4	0x021C_0000	0x021E_0FFF	0x03FF_FC80	Reserved
PROG5	0x021F_0000	0x021F_7FFF	0x03FF_FC80	Reserved
PROG6	0x0220_0000	0x022F_03FF	0x03FF_FCB6	Timers
PROG7	0x0231_0000	0x0231_03FF	0x03FF_FCB4	PLL
PROG8	0x0232_0000	0x0232_03FF	0x03FF_FCB4	GPIO
PROG9	0x0233_0000	0x0233_03FF	0x03FF_FCB4	SmartReflex
PROG10	0x0235_0000	0x0235_0FFF	0x03FF_FCB4	PSC
PROG11	0x0240_0000	0x024B_3FFF	0x03FF_FCB6	DEBUG_SS, Tracer Formatters
PROG12	0x0250_0000	0x0252_03FF	0x03FF_FCB4	Reserved
PROG13	0x0253_0000	0x0254_03FF	0x03FF_FCB6	I^2C, UART
PROG14	0x0260_0000	0x0260_FFFF	0x03FF_FCB4	CICs
PROG15	0x0262_0000	0x0262_07FF	0x03FF_FCB4	Chip-level Registers
End of Table 7-61				

Table 7-62 Programmable Range *n* Registers Reset Values for MPU1

Programmable Range	MPU1 (QM_SS DATA PORT)			
	Start Address (PROGn_MPSAR)	End Address (PROGn_MPEAR)	Memory Page Protection Attribute (PROGn_MPPA)	Memory Protection
PROG0	0x3400_0000	0x3401_FFFF	0x03FF_FC80	Queue Manager subsystem data
PROG1	0x3402_0000	0x3405_FFFF	0x000F_FCB6	
PROG2	0x3406_0000	0x3406_7FFF	0x03FF_FCB4	
PROG3	0x3406_8000	0x340B_7FFF	0x03FF_FC80	
PROG4	0x340B_8000	0x340B_FFFF	0x03FF_FCB6	
End of Table 7-62				

Table 7-63 Programmable Range *n* Registers Reset Values for MPU2

Programmable Range	MPU2 (QM_SS CFG PORT)			
	Start Address (PROGn_MPSAR)	End Address (PROGn_MPEAR)	Memory Page Protection Attribute (PROGn_MPPA)	Memory Protection
PROG0	0x02A0_0000	0x02A1_FFFF	0x03FF_FCA4	Queue Manager subsystem configuration
PROG1	0x02A2_0000	0x02A3_FFFF	0x000F_FCB6	
PROG2	0x02A4_0000	0x02A5_FFFF	0x000F_FCB6	
PROG3	0x02A6_0000	0x02A6_7FFF	0x03FF_FCB4	
PROG4	0x02A6_8000	0x02A6_8FFF	0x03FF_FCB4	
PROG5	0x02A6_9000	0x02A6_9FFF	0x03FF_FCB4	
PROG6	0x02A6_A000	0x02A6_AFFF	0x03FF_FCB4	
PROG7	0x02A6_B000	0x02A6_BFFF	0x03FF_FCB4	
PROG8	0x02A6_C000	0x02A6_DFFF	0x03FF_FCB4	
PROG9	0x02A6_E000	0x02A6_FFFF	0x03FF_FCB4	
PROG10	0x02A8_0000	0x02A8_FFFF	0x03FF_FCA4	
PROG11	0x02A9_0000	0x02A9_FFFF	0x03FF_FCB4	
PROG12	0x02AA_0000	0x02AA_7FFF	0x03FF_FCB4	
PROG13	0x02AA_8000	0x02AA_FFFF	0x03FF_FCB4	
PROG14	0x02AB_0000	0x02AB_7FFF	0x03FF_FCB4	
PROG15	0x02AB_8000	0x02AB_FFFF	0x03FF_FCB6	
End of Table 7-63				

Table 7-64 Programmable Range *n* Registers Reset Values for MPU3

Programmable Range	MPU3 (Semaphore)			
	Start Address (PROGn_MPSAR)	End Address (PROGn_MPEAR)	Memory Page Protection Attributes (PROGn_MPPA)	Memory Protection
PROG0	0x0264_0000	0x0264_07FF	0x0003_FCB6	Semaphore
End of Table 7-64				

Copyright 2014 Texas Instruments Incorporated

7.12 DDR3 Memory Controller

The 64-bit DDR3 Memory Controller bus of the TMS320C6678 is used to interface to JEDEC standard-compliant DDR3 SDRAM devices. The DDR3 external bus interfaces only to DDR3 SDRAM devices; it does not share the bus with any other types of peripherals.

7.12.1 DDR3 Memory Controller Device-Specific Information

The TMS320C6678 includes one 64-bit wide 1.5-V DDR3 SDRAM EMIF interface. The DDR3 interface can operate at 800 Mega Transfers per Second (MTS), 1066 MTS, 1333 MTS, and 1600 MTS.

Due to the complicated nature of the interface, a limited number of topologies are supported to provide a 16-bit, 32-bit, or 64-bit interface.

The DDR3 electrical requirements are fully specified in the DDR Jedec Specification JESD79-3C. Standard DDR3 SDRAMs are available in 8- and 16-bit versions, allowing for the following bank topologies to be supported by the interface:

- 72-bit: Five 16-bit SDRAMs (including 8 bits of ECC)
- 72-bit: Nine 8-bit SDRAMs (including 8 bits of ECC)
- 36-bit: Three 16-bit SDRAMs (including 4 bits of ECC)
- 36-bit: Five 8-bit SDRAMs (including 4 bits of ECC)
- 64-bit: Four 16-bit SDRAMs
- 64-bit: Eight 8-bit SDRAMs
- 32-bit: Two 16-bit SDRAMs
- 32-bit: Four 8-bit SDRAMs
- 16-bit: One 16-bit SDRAM
- 16-bit: Two 8-bit SDRAM

The approach to specifying interface timing for the DDR3 memory bus is different than on other interfaces such as I^2C or SPI. For these other interfaces, the device timing was specified in terms of data manual specifications and I/O buffer information specification (IBIS) models. For the DDR3 memory bus, the approach is to specify compatible DDR3 devices and provide the printed circuit board (PCB) solution and guidelines directly to the user.

7.12.2 DDR3 Memory Controller Race Condition Consideration

A race condition may exist when certain masters write data to the DDR3 memory controller. For example, if master A passes a software message via a buffer in external memory and does not wait for an indication that the write completes, before signaling to master B that the message is ready, when master B attempts to read the software message, then the master B read may bypass the master A write and, thus, master B may read stale data and, therefore, receive an incorrect message.

Some master peripherals (e.g., EDMA3 transfer controllers with TCCMOD=0) will always wait for the write to complete before signaling an interrupt to the system, thus avoiding this race condition. For masters that do not have a hardware specification of write-read ordering, it may be necessary to specify data ordering via software.

If master A does not wait for indication that a write is complete, it must perform the following workaround:

1. Perform the required write to DDR3 memory space.
2. Perform a dummy write to the DDR3 memory controller module ID and revision register.
3. Perform a dummy read to the DDR3 memory controller module ID and revision register.
4. Indicate to master B that the data is ready to be read after completion of the read in step 3. The completion of the read in step 3 ensures that the previous write was done.

Copyright 2014 Texas Instruments Incorporated

7.12.3 DDR3 Memory Controller Electrical Data/Timing

The *DDR3 Design Requirements for KeyStone Devices* in "Related Documentation from Texas Instruments" on page 72 specifies a complete DDR3 interface solution as well as a list of compatible DDR3 devices. The DDR3 electrical requirements are fully specified in the DDR3 Jedec Specification JESD79-3C. TI has performed the simulation and system characterization to ensure all DDR3 interface timings in this solution are met; therefore, no electrical data/timing information is supplied here for this interface.

Note—TI supports ***only*** designs that follow the board design guidelines outlined in the application report.

Copyright 2014 Texas Instruments Incorporated

7.13 I2C Peripheral

The inter-integrated circuit (I2C) module provides an interface between DSP and other devices compliant with Philips Semiconductors Inter-IC bus (I2C bus) specification version 2.1 and connected by way of an I2C bus. External components attached to this 2-wire serial bus can transmit/receive up to 8-bit data to/from the DSP through the I2C module.

7.13.1 I2C Device-Specific Information

The TMS320C6678 device includes an I2C peripheral module.

Note—When using the I2C module, ensure there are external pullup resistors on the SDA and SCL pins.

The I2C modules on the C6678 may be used by the DSP to control local peripheral ICs (DACs, ADCs, etc.) or may be used to communicate with other controllers in a system or to implement a user interface.

The I2C port is compatible with Philips I2C specification revision 2.1 (January 2000) and supports:

- Fast mode up to 400 Kbps (no fail-safe I/O buffers)
- Noise filter to remove noise 50 ns or less
- 7-bit and 10-bit device addressing modes
- Multi-master (transmit/receive) and slave (transmit/receive) functionality
- Events: DMA, interrupt, or polling
- Slew-rate limited open-drain output buffers

Figure 7-39 shows a block diagram of the I2C module.

Figure 7-39 I2C Module Block Diagram

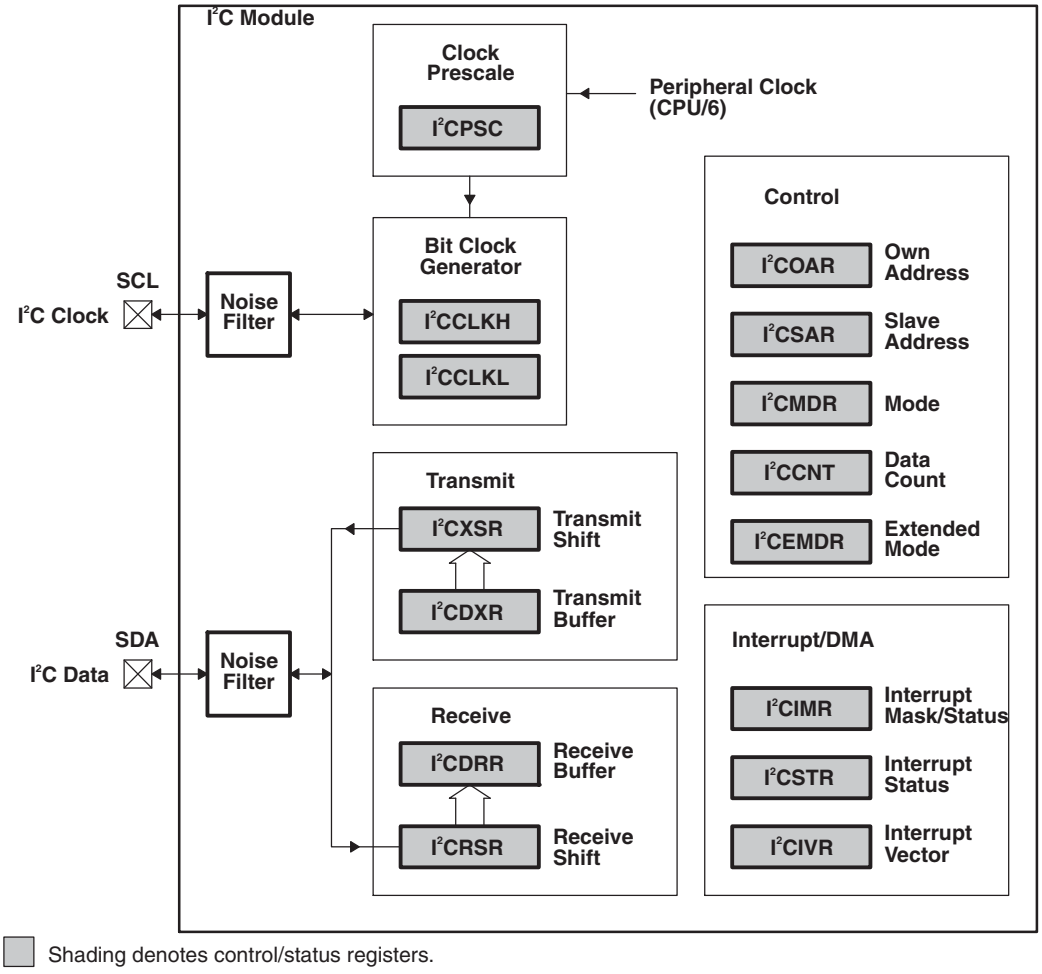

7.13.2 I2C Peripheral Register Description(s)

Table 7-65 I2C Registers (Sheet 1 of 2)

Hex Address Range	Register	Register Name
0253 0000	ICOAR	I2C Own Address Register
0253 0004	ICIMR	I2C Interrupt Mask/Status Register
0253 0008	ICSTR	I2C Interrupt Status Register
0253 000C	ICCLKL	I2C Clock Low-Time Divider Register
0253 0010	ICCLKH	I2C Clock High-Time Divider Register
0253 0014	ICCNT	I2C Data Count Register
0253 0018	ICDRR	I2C Data Receive Register
0253 001C	ICSAR	I2C Slave Address Register
0253 0020	ICDXR	I2C Data Transmit Register
0253 0024	ICMDR	I2C Mode Register
0253 0028	ICIVR	I2C Interrupt Vector Register
0253 002C	ICEMDR	I2C Extended Mode Register

Copyright 2014 Texas Instruments Incorporated

Table 7-65 I²C Registers (Sheet 2 of 2)

Hex Address Range	Register	Register Name
0253 0030	ICPSC	I²C Prescaler Register
0253 0034	ICPID1	I²C Peripheral Identification Register 1 [Value: 0x0000 0105]
0253 0038	ICPID2	I²C Peripheral Identification Register 2 [Value: 0x0000 0005]
0253 003C - 0253 007F	-	Reserved
End of Table 7-65		

7.13.3 I²C Electrical Data/Timing

7.13.3.1 Inter-Integrated Circuits (I²C) Timing

Table 7-66 I²C Timing Requirements (1)
(see Figure 7-40)

No.			Standard Mode		Fast Mode		Units
			Min	Max	Min	Max	
1	$t_{c(SCL)}$	Cycle time, SCL	10		2.5		µs
2	$t_{su(SCLH-SDAL)}$	Setup time, SCL high before SDA low (for a repeated START condition)	4.7		0.6		µs
3	$t_{h(SDAL-SCLL)}$	Hold time, SCL low after SDA low (for a START and a repeated START condition)	4		0.6		µs
4	$t_{w(SCLL)}$	Pulse duration, SCL low	4.7		1.3		µs
5	$t_{w(SCLH)}$	Pulse duration, SCL high	4		0.6		µs
6	$t_{su(SDAV-SCLH)}$	Setup time, SDA valid before SCL high	250		100 (2)		ns
7	$t_{h(SCLL-SDAV)}$	Hold time, SDA valid after SCL low (For I²C bus devices)	0 (3)	3.45	0 (3)	0.9 (4)	µs
8	$t_{w(SDAH)}$	Pulse duration, SDA high between STOP and START conditions	4.7		1.3		µs
9	$t_{r(SDA)}$	Rise time, SDA		1000	$20 + 0.1C_b$ (5)	300	ns
10	$t_{r(SCL)}$	Rise time, SCL		1000	$20 + 0.1C_b$ (5)	300	ns
11	$t_{f(SDA)}$	Fall time, SDA		300	$20 + 0.1C_b$ (5)	300	ns
12	$t_{f(SCL)}$	Fall time, SCL		300	$20 + 0.1C_b$ (5)	300	ns
13	$t_{su(SCLH-SDAH)}$	Setup time, SCL high before SDA high (for STOP condition)	4		0.6		µs
14	$t_{w(SP)}$	Pulse duration, spike (must be suppressed)			0	50	ns
15	C_b (5)	Capacitive load for each bus line		400		400	pF
End of Table 7-66							

1 The I²C pins SDA and SCL do not feature fail-safe I/O buffers. These pins could potentially draw current when the device is powered down

2 A Fast-mode I²C-bus™ device can be used in a Standard-mode I²C-bus™ system, but the requirement tsu(SDA-SCLH) ≥ 250 ns must then be met. This will automatically be the case if the device does not stretch the LOW period of the SCL signal. If such a device does stretch the LOW period of the SCL signal, it must output the next data bit to the SDA line t_r max + $t_{su(SDA-SCLH)}$ = 1000 + 250 = 1250 ns (according to the Standard-mode I²C-Bus Specification) before the SCL line is released.

3 A device must internally provide a hold time of at least 300 ns for the SDA signal (referred to the V_{IHmin} of the SCL signal) to bridge the undefined region of the falling edge of SCL.

4 The maximum $t_{h(SDA-SCLL)}$ has to be met only if the device does not stretch the low period [$t_{w(SCLL)}$] of the SCL signal.

5 C_b = total capacitance of one bus line in pF. If mixed with HS-mode devices, faster fall-times are allowed.

Figure 7-40 I²C Receive Timings

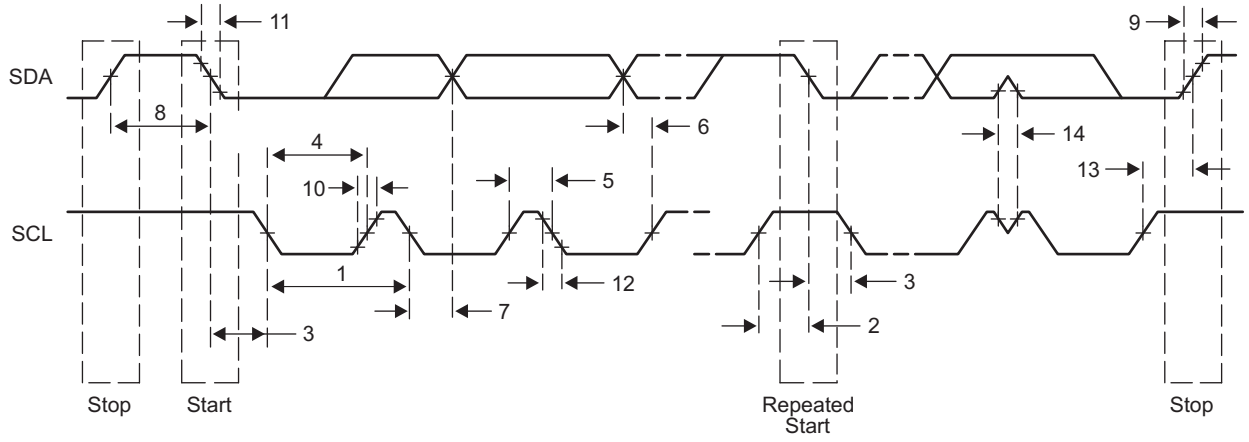

Table 7-67 I²C Switching Characteristics (1)
(see Figure 7-41)

No.	Parameter		Standard Mode		Fast Mode		Unit
			Min	Max	Min	Max	
16	$t_{c(SCL)}$	Cycle time, SCL	10		2.5		ms
17	$t_{su(SCLH-SDAL)}$	Setup time, SCL high to SDA low (for a repeated START condition)	4.7		0.6		ms
18	$t_{h(SDAL-SCLL)}$	Hold time, SDA low after SCL low (for a START and a repeated START condition)	4		0.6		ms
19	$t_{w(SCLL)}$	Pulse duration, SCL low	4.7		1.3		ms
20	$t_{w(SCLH)}$	Pulse duration, SCL high	4		0.6		ms
21	$t_{d(SDAV-SDLH)}$	Delay time, SDA valid to SCL high	250		100		ns
22	$t_{v(SDLL-SDAV)}$	Valid time, SDA valid after SCL low (For I²C bus devices)	0		0	0.9	ms
23	$t_{w(SDAH)}$	Pulse duration, SDA high between STOP and START conditions	4.7		1.3		ms
24	$t_{r(SDA)}$	Rise time, SDA		1000	$20 + 0.1C_b$ (1)	300	ns
25	$t_{r(SCL)}$	Rise time, SCL		1000	$20 + 0.1C_b$ (1)	300	ns
26	$t_{f(SDA)}$	Fall time, SDA		300	$20 + 0.1C_b$ (1)	300	ns
27	$t_{f(SCL)}$	Fall time, SCL		300	$20 + 0.1C_b$ (1)	300	ns
28	$t_{d(SCLH-SDAH)}$	Delay time, SCL high to SDA high (for STOP condition)	4		0.6		ms
29	C_p	Capacitance for each I²C pin		10		10	pF
End of Table 7-67							

1 C_b = total capacitance of one bus line in pF. If mixed with HS-mode devices, faster fall-times are allowed.

Copyright 2014 Texas Instruments Incorporated

Figure 7-41 I²C Transmit Timings

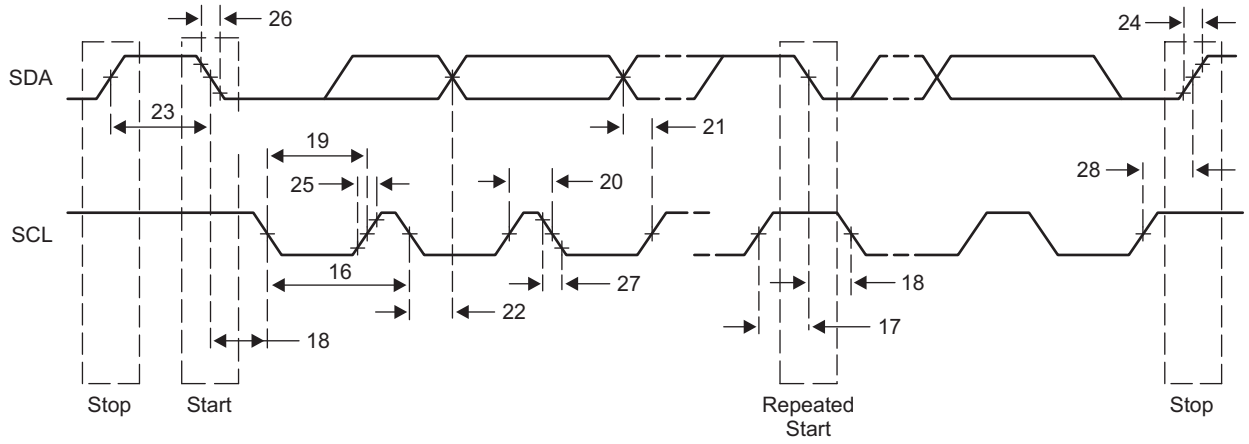

7.14 SPI Peripheral

The serial peripheral interconnect (SPI) module provides an interface between the DSP and other SPI-compliant devices. The primary intent of this interface is to allow for connection to a SPI ROM for boot. The SPI module on C6678 is supported only in master mode. Additional chip-level components can also be included, such as temperature sensors or an I/O expander.

The C6678 SPI supports two modes, 3-pin and 4-pin. For the 4-pin chip-select mode, the C6678 supports up to two chip selects.

7.14.1 SPI Electrical Data/Timing

7.14.1.1 SPI Timing

Table 7-68 SPI Timing Requirements
See Figure 7-42)

No.			Min	Max	Unit
Master Mode Timing Diagrams — Base Timings for 3 Pin Mode					
7	tsu(SDI-SPC)	Input Setup Time, SPIDIN valid before receive edge of SPICLK. Polarity = 0 Phase = 0	2		ns
7	tsu(SDI-SPC)	Input Setup Time, SPIDIN valid before receive edge of SPICLK. Polarity = 0 Phase = 1	2		ns
7	tsu(SDI-SPC)	Input Setup Time, SPIDIN valid before receive edge of SPICLK. Polarity = 1 Phase = 0	2		ns
7	tsu(SDI-SPC)	Input Setup Time, SPIDIN valid before receive edge of SPICLK. Polarity = 1 Phase = 1	2		ns
8	th(SPC-SDI)	Input Hold Time, SPIDIN valid after receive edge of SPICLK. Polarity = 0 Phase = 0	5		ns
8	th(SPC-SDI)	Input Hold Time, SPIDIN valid after receive edge of SPICLK. Polarity = 0 Phase = 1	5		ns
8	th(SPC-SDI)	Input Hold Time, SPIDIN valid after receive edge of SPICLK. Polarity = 1 Phase = 0	5		ns
8	th(SPC-SDI)	Input Hold Time, SPIDIN valid after receive edge of SPICLK. Polarity = 1 Phase = 1	5		ns
End of Table 7-68					

Table 7-69 SPI Switching Characteristics (Sheet 1 of 2)
(See Figure 7-42 and Figure 7-43)

No.	Parameter		Min	Max	Unit
Master Mode Timing Diagrams — Base Timings for 3 Pin Mode					
1	tc(SPC)	Cycle Time, SPICLK, All Master Modes	3*P2 (1)		ns
2	tw(SPCH)	Pulse Width High, SPICLK, All Master Modes	0.5*tc - 1		ns
3	tw(SPCL)	Pulse Width Low, SPICLK, All Master Modes	0.5*tc - 1		ns
4	td(SDO-SPC)	Setup (Delay), initial data bit valid on SPIDOUT to initial edge on SPICLK. Polarity = 0, Phase = 0.	5		ns
4	td(SDO-SPC)	Setup (Delay), initial data bit valid on SPIDOUT to initial edge on SPICLK. Polarity = 0, Phase = 1.	5		ns
4	td(SDO-SPC)	Setup (Delay), initial data bit valid on SPIDOUT to initial edge on SPICLK Polarity = 1, Phase = 0	5		ns
4	td(SDO-SPC)	Setup (Delay), initial data bit valid on SPIDOUT to initial edge on SPICLK Polarity = 1, Phase = 1	5		ns
5	td(SPC-SDO)	Setup (Delay), subsequent data bits valid on SPIDOUT to initial edge on SPICLK. Polarity = 0 Phase = 0	2		ns
5	td(SPC-SDO)	Setup (Delay), subsequent data bits valid on SPIDOUT to initial edge on SPICLK Polarity = 0 Phase = 1	2		ns
5	td(SPC-SDO)	Setup (Delay), subsequent data bits valid on SPIDOUT to initial edge on SPICLK Polarity = 1 Phase = 0	2		ns
5	td(SPC-SDO)	Setup (Delay), subsequent data bits valid on SPIDOUT to initial edge on SPICLK Polarity = 1 Phase = 1	2		ns

Copyright 2014 Texas Instruments Incorporated

Table 7-69 SPI Switching Characteristics (Sheet 2 of 2)
(See Figure 7-42 and Figure 7-43)

No.	Parameter		Min	Max	Unit
6	toh(SPC-SDO)	Output hold time, SPIDOUT valid after receive edge of SPICLK except for final bit. Polarity = 0 Phase = 0	0.5*tc - 2		ns
6	toh(SPC-SDO)	Output hold time, SPIDOUT valid after receive edge of SPICLK except for final bit. Polarity = 0 Phase = 1	0.5*tc - 2		ns
6	toh(SPC-SDO)	Output hold time, SPIDOUT valid after receive edge of SPICLK except for final bit. Polarity = 1 Phase = 0	0.5*tc - 2		ns
6	toh(SPC-SDO)	Output hold time, SPIDOUT valid after receive edge of SPICLK except for final bit. Polarity = 1 Phase = 1	0.5*tc - 2		ns
Additional SPI Master Timings — 4 Pin Mode with Chip Select Option					
19	td(SCS-SPC)	Delay from $\overline{\text{SPISCS[n]}}$ active to first SPICLK. Polarity = 0 Phase = 0	2*P2 - 5	2*P2 + 5	ns
19	td(SCS-SPC)	Delay from $\overline{\text{SPISCS[n]}}$ active to first SPICLK. Polarity = 0 Phase = 1	0.5*tc + (2*P2) - 5	0.5*tc + (2*P2) + 5	ns
19	td(SCS-SPC)	Delay from $\overline{\text{SPISCS[n]}}$ active to first SPICLK. Polarity = 1 Phase = 0	2*P2 - 5	2*P2 + 5	ns
19	td(SCS-SPC)	Delay from $\overline{\text{SPISCS[n]}}$ active to first SPICLK. Polarity = 1 Phase = 1	0.5*tc + (2*P2) - 5	0.5*tc + (2*P2) + 5	ns
20	td(SPC-SCS)	Delay from final SPICLK edge to master deasserting $\overline{\text{SPISCS[n]}}$. Polarity = 0 Phase = 0	1*P2 - 5	1*P2 + 5	ns
20	td(SPC-SCS)	Delay from final SPICLK edge to master deasserting $\overline{\text{SPISCS[n]}}$. Polarity = 0 Phase = 1	0.5*tc + (1*P2) - 5	0.5*tc + (1*P2) + 5	ns
20	td(SPC-SCS)	Delay from final SPICLK edge to master deasserting $\overline{\text{SPISCS[n]}}$. Polarity = 1 Phase = 0	1*P2 - 5	1*P2 + 5	ns
20	td(SPC-SCS)	Delay from final SPICLK edge to master deasserting $\overline{\text{SPISCS[n]}}$. Polarity = 1 Phase = 1	0.5*tc + (1*P2) - 5	0.5*tc + (1*P2) + 5	ns
	tw(SCSH)	Minimum inactive time on $\overline{\text{SPISCS[n]}}$ pin between two transfers when $\overline{\text{SPISCS[n]}}$ is not held using the CSHOLD feature.	2*P2 - 5		ns
End of Table 7-69					

1 P2 = 1/SYSCLK7

Figure 7-42 SPI Master Mode Timing Diagrams — Base Timings for 3 Pin Mode

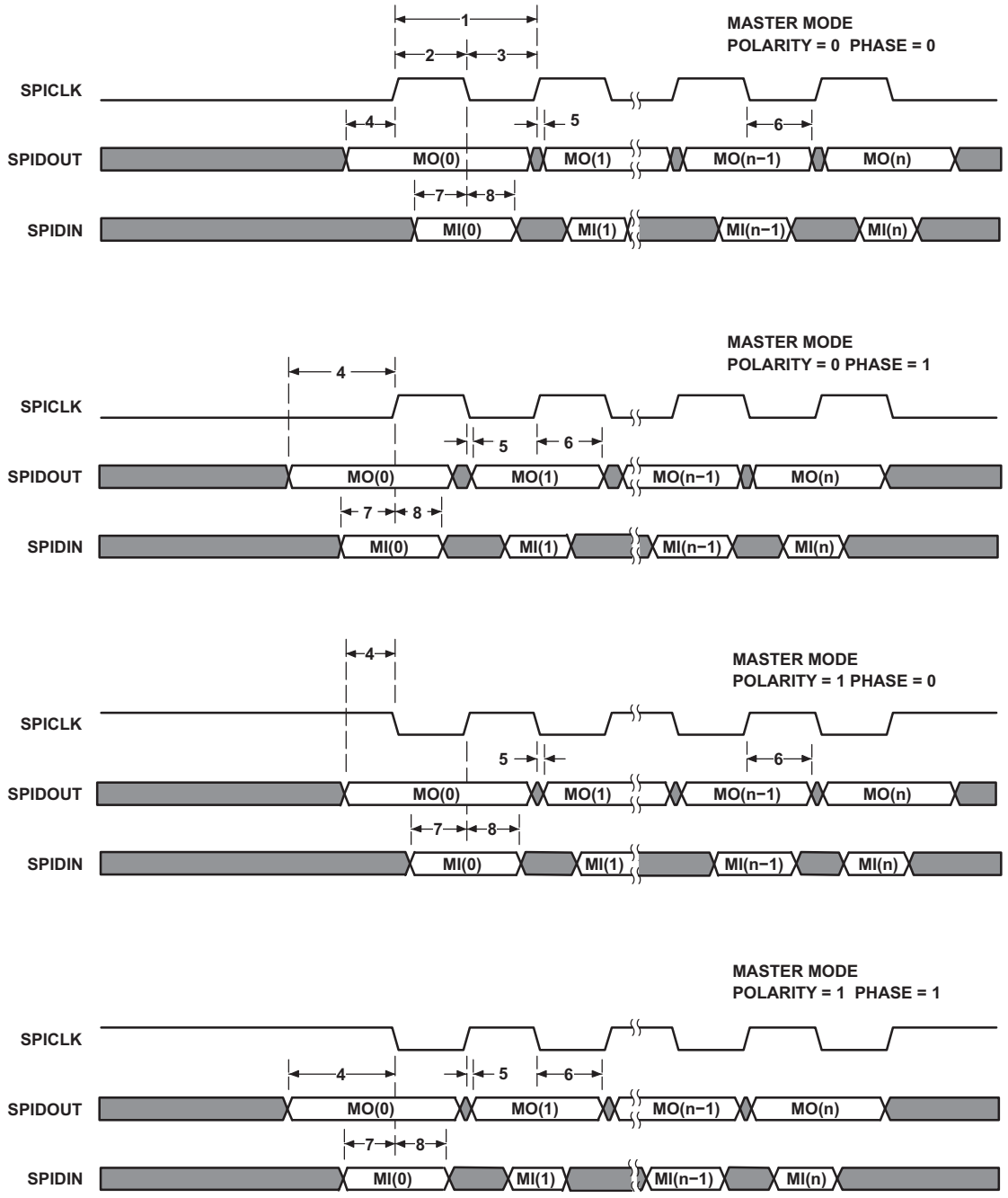

Figure 7-43 SPI Additional Timings for 4 Pin Master Mode with Chip Select Option

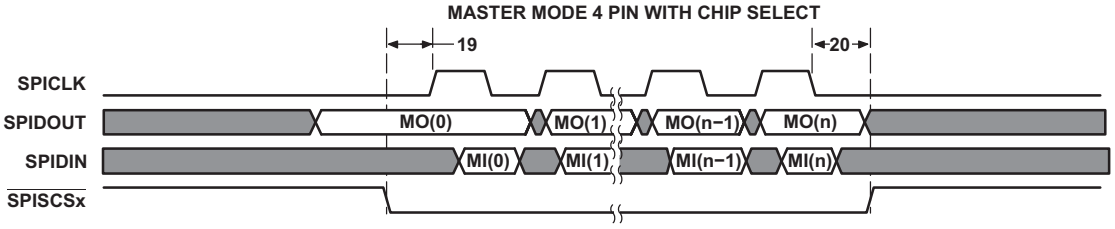

Copyright 2014 Texas Instruments Incorporated

7.15 HyperLink Peripheral

The TMS320C6678 includes the HyperLink bus for companion chip/die interfaces. This is a four-lane SerDes interface designed to operate at up to 12.5 Gbaud per lane. The supported data rates include 1.25 Gbaud, 3.125 Gbaud, 6.25 Gbaud, 10 Gbaud and 12.5 Gbaud. The interface is used to connect with external accelerators. The HyperLink links must be connected with DC coupling.

The interface includes the Serial Station Management Interfaces used to send power management and flow messages between devices. This consists of four LVCMOS inputs and four LVCMOS outputs configured as two 2-wire output buses and two 2-wire input buses. Each 2-wire bus includes a data signal and a clock signal.

7.15.1 HyperLink Device-Specific Interrupt Event

The HyperLink has 64 input events. Events 0 to 31come from the chip level interrupt controller and events 32 to 63 are from queue-pending signals from the Queue Manager to monitor some of the transmission queue status.

Table 7-70 HyperLink Events for C6678 (Sheet 1 of 2)

Event Number	Event	Event Description
0	CIC3_OUT8	Interrupt Controller output
1	CIC3_OUT9	Interrupt Controller output
2	CIC3_OUT10	Interrupt Controller output
3	CIC3_OUT11	Interrupt Controller output
4	CIC3_OUT12	Interrupt Controller output
5	CIC3_OUT13	Interrupt Controller output
6	CIC3_OUT14	Interrupt Controller output
7	CIC3_OUT15	Interrupt Controller output
8	CIC3_OUT16	Interrupt Controller output
9	CIC3_OUT17	Interrupt Controller output
10	CIC3_OUT18	Interrupt Controller output
11	CIC3_OUT19	Interrupt Controller output
12	CIC3_OUT20	Interrupt Controller output
13	CIC3_OUT21	Interrupt Controller output
14	CIC3_OUT22	Interrupt Controller output
15	CIC3_OUT23	Interrupt Controller output
16	CIC3_OUT24	Interrupt Controller output
17	CIC3_OUT25	Interrupt Controller output
18	CIC3_OUT26	Interrupt Controller output
19	CIC3_OUT27	Interrupt Controller output
20	CIC3_OUT28	Interrupt Controller output
21	CIC3_OUT29	Interrupt Controller output
22	CIC3_OUT30	Interrupt Controller output
23	CIC3_OUT31	Interrupt Controller output
24	CIC3_OUT32	Interrupt Controller output
25	CIC3_OUT33	Interrupt Controller output
26	CIC3_OUT34	Interrupt Controller output
27	CIC3_OUT35	Interrupt Controller output
28	CIC3_OUT36	Interrupt Controller output
29	CIC3_OUT37	Interrupt Controller output

Table 7-70 HyperLink Events for C6678 (Sheet 2 of 2)

Event Number	Event	Event Description
30	CIC3_OUT38	Interrupt Controller output
31	CIC3_OUT39	Interrupt Controller output
32	QM_INT_PEND_864	Queue manager pend event
33	QM_INT_PEND_865	Queue manager pend event
34	QM_INT_PEND_866	Queue manager pend event
35	QM_INT_PEND_867	Queue manager pend event
36	QM_INT_PEND_868	Queue manager pend event
37	QM_INT_PEND_869	Queue manager pend event
38	QM_INT_PEND_870	Queue manager pend event
39	QM_INT_PEND_871	Queue manager pend event
40	QM_INT_PEND_872	Queue manager pend event
41	QM_INT_PEND_873	Queue manager pend event
42	QM_INT_PEND_874	Queue manager pend event
43	QM_INT_PEND_875	Queue manager pend event
44	QM_INT_PEND_876	Queue manager pend event
45	QM_INT_PEND_877	Queue manager pend event
46	QM_INT_PEND_878	Queue manager pend event
47	QM_INT_PEND_879	Queue manager pend event
48	QM_INT_PEND_880	Queue manager pend event
49	QM_INT_PEND_881	Queue manager pend event
50	QM_INT_PEND_882	Queue manager pend event
51	QM_INT_PEND_883	Queue manager pend event
52	QM_INT_PEND_884	Queue manager pend event
53	QM_INT_PEND_885	Queue manager pend event
54	QM_INT_PEND_886	Queue manager pend event
55	QM_INT_PEND_887	Queue manager pend event
56	QM_INT_PEND_888	Queue manager pend event
57	QM_INT_PEND_889	Queue manager pend event
58	QM_INT_PEND_890	Queue manager pend event
59	QM_INT_PEND_891	Queue manager pend event
60	QM_INT_PEND_892	Queue manager pend event
61	QM_INT_PEND_893	Queue manager pend event
62	QM_INT_PEND_894	Queue manager pend event
63	QM_INT_PEND_895	Queue manager pend event
End of Table 7-70		

Copyright 2014 Texas Instruments Incorporated

7.15.2 HyperLink Electrical Data/Timing

The tables and figure below describe the timing requirements and switching characteristics of HyperLink peripheral.

Table 7-71 HyperLink Peripheral Timing Requirements
See Figure 7-44,Figure 7-45,Figure 7-46

No.			Min	Max	Unit
FL Interface					
1	tc(MCMTXFLCLK)	Clock period - MCMTXFLCLK (C1)	6.4		ns
2	tw(MCMTXFLCLKH)	High pulse width - MCMTXFLCLK	0.4*C1	0.6*C1	ns
3	tw(MCMTXFLCLKL)	Low pulse width - MCMTXFLCLK	0.4*C1	0.6*C1	ns
6	tsu(MCMTXFLDAT-MCMTXFLCLKH)	Setup time - MCMTXFLDAT valid before MCMTXFLCLK high	1		ns
7	th(MCMTXFLCLKH-MCMTXFLDAT)	Hold time - MCMTXFLDAT valid after MCMTXFLCLK high	1		ns
6	tsu(MCMTXFLDAT-MCMTXFLCLKL)	Setup time - MCMTXFLDAT valid before MCMTXFLCLK low	1		ns
7	th(MCMTXFLCLKL-MCMTXFLDAT)	Hold time - MCMTXFLDAT valid after MCMTXFLCLK low	1		ns
PM Interface					
1	tc(MCMRXPMCLK)	Clock period - MCMRXPMCLK (C3)	6.4		ns
2	tw(MCMRXPMCLK)	High pulse width - MCMRXPMCLK	0.4*C3	0.6*C3	ns
3	tw(MCMRXPMCLK)	Low pulse width - MCMRXPMCLK	0.4*C3	0.6*C3	ns
6	tsu(MCMRXPMDAT-MCMRXPMCLKH)	Setup time - MCMRXPMDAT valid before MCMRXPMCLK high	1		ns
7	th(MCMRXPMCLKH-MCMRXPMDAT)	Hold time - MCMRXPMDAT valid after MCMRXPMCLK high	1		ns
6	tsu(MCMRXPMDAT-MCMRXPMCLKL)	Setup time - MCMRXPMDAT valid before MCMRXPMCLK low	1		ns
7	th(MCMRXPMCLKL-MCMRXPMDAT)	Hold time - MCMRXPMDAT valid after MCMRXPMCLK low	1		ns
End of Table 7-71					

Table 7-72 HyperLink Peripheral Switching Characteristics
See Figure 7-44,Figure 7-45,Figure 7-46

No.	Parameter		Min	Max	Unit
FL Interface					
1	tc(MCMRXFLCLK)	Clock period - MCMRXFLCLK (C2)	6.4		ns
2	tw(MCMRXFLCLKH)	High pulse width - MCMRXFLCLK	0.4*C2	0.6*C2	ns
3	tw(MCMRXFLCLKL)	Low pulse width - MCMRXFLCLK	0.4*C2	0.6*C2	ns
4	tosu(MCMRXFLDAT-MCMRXFLCLKH)	Setup time - MCMRXFLDAT valid before MCMRXFLCLK high	0.25*C2-0.4		ns
5	toh(MCMRXFLCLKH-MCMRXFLDAT)	Hold time - MCMRXFLDAT valid after MCMRXFLCLK high	0.25*C2-0.4		ns
4	tosu(MCMRXFLDAT-MCMRXFLCLKL)	Setup time - MCMRXFLDAT valid before MCMRXFLCLK low	0.25*C2-0.4		ns
5	toh(MCMRXFLCLKL-MCMRXFLDAT)	Hold time - MCMRXFLDAT valid after MCMRXFLCLK low	0.25*C2-0.4		ns
PM Interface					
1	tc(MCMTXPMCLK)	Clock period - MCMTXPMCLK (C4)	6.4		ns
2	tw(MCMTXPMCLK)	High pulse width - MCMTXPMCLK	0.4*C4	0.6*C4	ns
3	tw(MCMTXPMCLK)	Low pulse width - MCMTXPMCLK	0.4*C4	0.6*C4	ns
4	tosu(MCMTXPMDAT-MCMTXPMCLKH)	Setup time - MCMTXPMDAT valid before MCMTXPMCLK high	0.25*C4-0.4		ns
5	toh(MCMTXPMCLKH-MCMTXPMDAT)	Hold time - MCMTXPMDAT valid after MCMTXPMCLK high	0.25*C4-0.4		ns
4	tosu(MCMTXPMDAT-MCMTXPMCLKL)	Setup time - MCMTXPMDAT valid before MCMTXPMCLK low	0.25*C4-0.4		ns
5	toh(MCMTXPMCLKL-MCMTXPMDAT)	Hold time - MCMTXPMDAT valid after MCMTXPMCLK low	0.25*C4-0.4		ns
End of Table 7-72					

Copyright 2014 Texas Instruments Incorporated

Figure 7-44 HyperLink Station Management Clock Timing

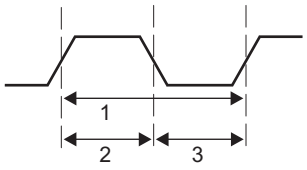

Figure 7-45 HyperLink Station Management Transmit Timing

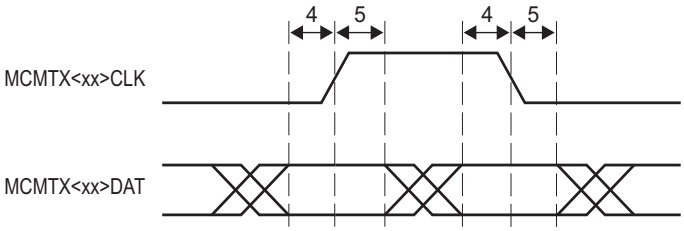

<xx> represents the interface that is being used: PM or FL

Figure 7-46 HyperLink Station Management Receive Timing

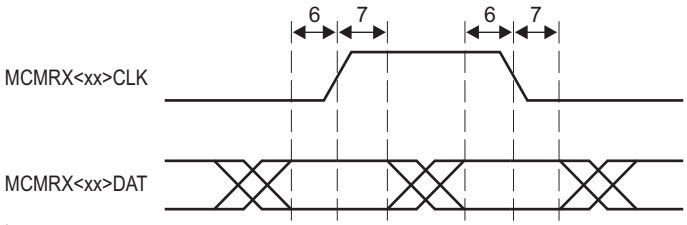

<xx> represents the interface that is being used: PM or FL

Copyright 2014 Texas Instruments Incorporated

7.16 UART Peripheral

The universal asynchronous receiver/transmitter (UART) module provides an interface between the DSP and UART terminal interface or other UART-based peripheral. The UART is based on the industry standard TL16C550 asynchronous communications element, which, in turn, is a functional upgrade of the TL16C450. Functionally similar to the TL16C450 on power up (single character or TL16C450 mode), the UART can be placed in an alternate FIFO (TL16C550) mode. This relieves the DSP of excessive software overhead by buffering received and transmitted characters. The receiver and transmitter FIFOs store up to 16 bytes including three additional bits of error status per byte for the receiver FIFO.

The UART performs serial-to-parallel conversions on data received from a peripheral device and parallel-to-serial conversion on data received from the DSP. The DSP can read the UART status at any time. The UART includes control capability and a processor interrupt system that can be tailored to minimize software management of the communications link. For more information on UART, see the *Universal Asynchronous Receiver/Transmitter (UART) for KeyStone Devices User Guide* in "Related Documentation from Texas Instruments" on page 72.

Table 7-73 UART Timing Requirements
(see Figure 7-47 and Figure 7-48)

No.			Min	Max	Unit
Receive Timing					
4	tw(RXSTART)	Pulse width, receive start bit	0.96U [1]	1.05U	ns
5	tw(RXH)	Pulse width, receive data/parity bit high	0.96U	1.05U	ns
5	tw(RXL)	Pulse width, receive data/parity bit low	0.96U	1.05U	ns
6	tw(RXSTOP1)	Pulse width, receive stop bit 1	0.96U	1.05U	ns
6	tw(RXSTOP15)	Pulse width, receive stop bit 1.5	1.5*(0.96U)	1.5*(1.05U)	ns
6	tw(RXSTOP2)	Pulse width, receive stop bit 2	2*(0.96U)	2*(1.05U)	ns
Autoflow Timing Requirements					
8	td(CTSL-TX)	Delay time, CTS asserted to START bit transmit	P [2]	5P	ns
End of Table 7-73					

1 U = UART baud time = 1/programmed baud rate
2 P = 1/SYSCLK7

Figure 7-47 UART Receive Timing Waveform

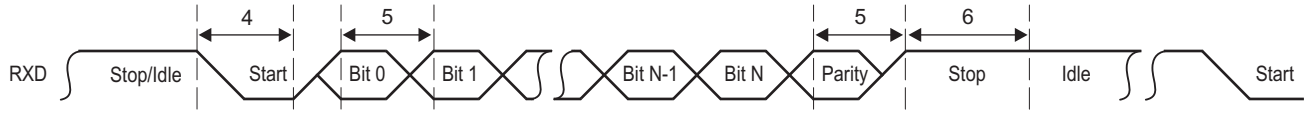

Figure 7-48 UART CTS (Clear-to-Send Input) — Autoflow Timing Waveform

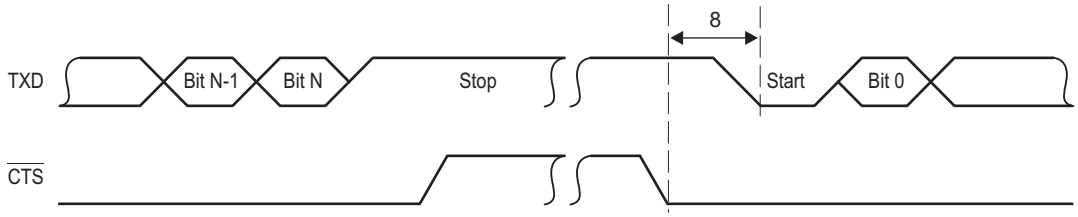

Table 7-74 UART Switching Characteristics
(See Figure 7-49 and Figure 7-50)

No.	Parameter		Min	Max	Unit
Transmit Timing					
1	tw(TXSTART)	Pulse width, transmit start bit	U (1) - 2	U + 2	ns
2	tw(TXH)	Pulse width, transmit data/parity bit high	U - 2	U + 2	ns
2	tw(TXL)	Pulse width, transmit data/parity bit low	U - 2	U + 2	ns
3	tw(TXSTOP1)	Pulse width, transmit stop bit 1	U - 2	U + 2	ns
3	tw(TXSTOP15)	Pulse width, transmit stop bit 1.5	1.5 * (U - 2)	1.5 * ('U + 2)	ns
3	tw(TXSTOP2)	Pulse width, transmit stop bit 2	2 * (U - 2)	2 * ('U + 2)	ns
Autoflow Timing Requirements					
7	td(RX-RTSH)	Delay time, STOP bit received to RTS deasserted	P (2)	5P	ns
End of Table 7-74					

1 U = UART baud time = 1/programmed baud rate
2 P = 1/SYSCLK7

Figure 7-49 UART Transmit Timing Waveform

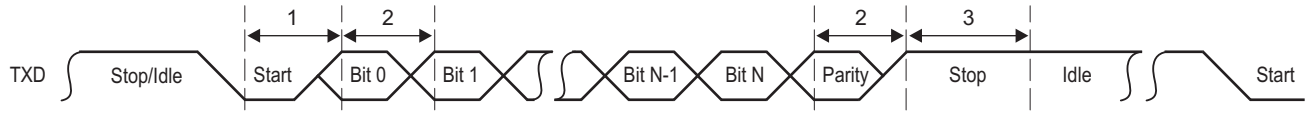

Figure 7-50 UART RTS (Request-to-Send Output) — Autoflow Timing Waveform

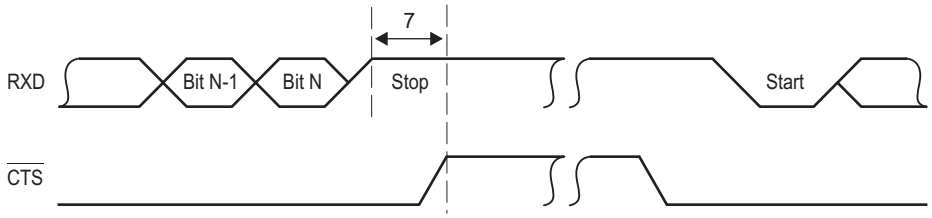

7.17 PCIe Peripheral

The two-lane PCI express (PCIe) module on the device provides an interface between the DSP and other PCIe-compliant devices. The PCI Express module provides low-pin-count, high-reliability, and high-speed data transfer at rates of 5.0 GBaud per lane on the serial links. For more information, see the *Peripheral Component Interconnect Express (PCIe) for KeyStone Devices User Guide* in "Related Documentation from Texas Instruments" on page 72. The PCIe electrical requirements are fully specified in the PCI Express Base Specification Revision 2.0 of PCI-SIG. TI has performed the simulation and system characterization to ensure all PCIe interface timings in this solution are met; therefore, no electrical data/timing information is supplied here for this interface.

Copyright 2014 Texas Instruments Incorporated

7.18 TSIP Peripheral

The telecom serial interface port (TSIP) module provides a glueless interface to common telecom serial data streams. For more information, see the *Telecom Serial Interface Port (TSIP) for the C66x DSP User Guide* in "Related Documentation from Texas Instruments" on page 72.

7.18.1 TSIP Electrical Data/Timing

Table 7-75 Timing Requirements for TSIP 2x Mode (1)
(see Figure 7-51)

No.			Min	Max	Unit
1	t_c(CLK)	Cycle time, CLK rising edge to next CLK rising edge	61 (2)		ns
2	t_w(CLKL)	Pulse duration, CLK low	0.4×t_c(CLK)		ns
3	t_w(CLKH)	Pulse duration, CLK high	0.4×t_c(CLK)		ns
4	t_t(CLK)	Transition time, CLK high to low or CLK low to high		2	ns
5	t_{su}(FS-CLK)	Setup time, FS valid before rising CLK	5		ns
6	t_h(CLK-FS)	Hold time, FS valid after rising CLK	5		ns
7	t_{su}(TR-CLK)	Setup time, TR valid before rising CLK	5		ns
8	t_h(CLK-TR)	Hold time, TR valid after rising CLK	5		ns
9	t_d(CLKL-TX)	Delay time, CLK low to TX valid	1	12	ns
10	t_{dis}(CLKH-TXZ)	Disable time, CLK low to TX Hi-Z	2	10	ns
End of Table 7-75					

1 Polarities of XMTFSYNCP = 0b, XMTFCLKP = 0, XMTDCLKP = 1b, RCVFSYNCP = 0, RCVFCLKP = 0, RCVDCLKP = 0. If the polarity of any of the signals is inverted, then the timing references of that signal are also inverted.

2 Timing shown is for 8.192 Mbps links. Timing for 16.384 Mbps and 32.768 Mbps links is 30.5 ns and 15.2 ns, respectively.

Figure 7-51 TSIP 2x Timing Diagram (1)

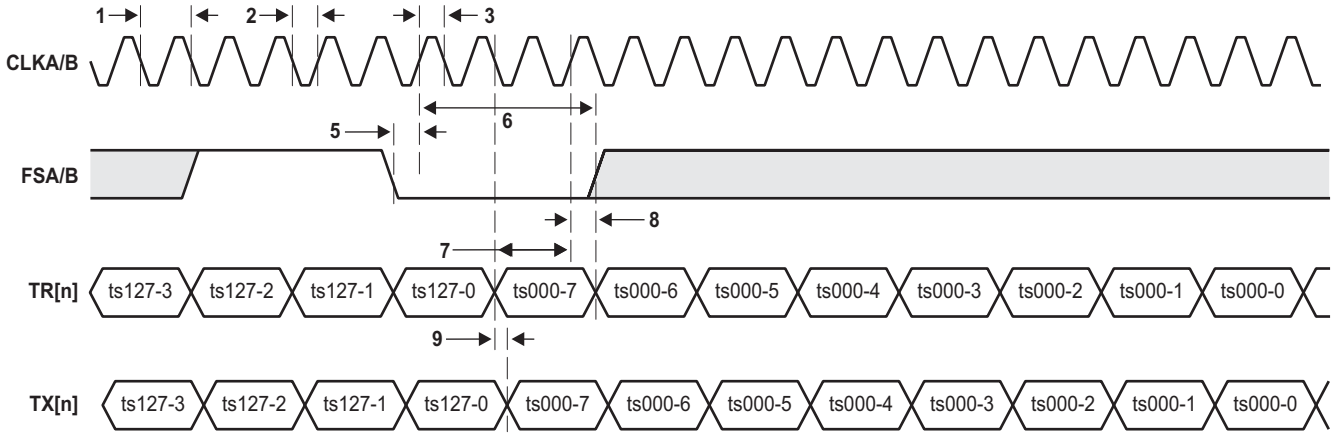

1 Example timeslot numbering shown is for 8.192 Mbps links; 16.384 Mbps links have timeslots numbered 0 through 255 and 32.768 Mbps links have timeslots numbered 0 through 511. The data timing shown relative to the clock and frame sync signals would require a RCVDATD=1 and a XMTDATD=1

Copyright 2014 Texas Instruments Incorporated

Table 7-76 Timing Requirements for TSIP 1x Mode [1]
(see Figure 7-52)

No.			Min	Max	Unit
11	t_c(CLK)	Cycle time, CLK rising edge to next CLK rising edge	122.1 [2]		ns
12	t_w(CLKL)	Pulse duration, CLK low	0.4×t_c(CLK)		ns
13	t_w(CLKH)	Pulse duration, CLK high	0.4×t_c(CLK)		ns
14	t_t(CLK)	Transition time, CLK high to low or CLK low to high		2	ns
15	t_{su}(FS-CLK)	Setup time, FS valid before rising CLK	5		ns
16	t_h(CLK-FS)	Hold time, FS valid after rising CLK	5		ns
17	t_{su}(TR-CLK)	Setup time, TR valid before rising CLK	5		ns
18	t_h(CLK-TR)	Hold time, TR valid after rising CLK	5		ns
19	t_d(CLKL-TX)	Delay time, CLK low to TX valid	1	12	ns
20	t_{dis}(CLKH-TXZ)	Disable time, CLK low to TX Hi-Z	2	10	ns
End of Table 7-76					

1 Polarities of XMTFSYNCP = 0b, XMTFCLKP = 0, XMTDCLKP = 0b, RCVFSYNCP = 0, RCVFCLKP = 0, RCVDCLKP = 1. If the polarity of any of the signals is inverted, then the timing references of that signal are also inverted.

2 Timing shown is for 8.192 Mbps links. Timing for 16.384 Mbps and 32.768 Mbps links is 61 ns and 30.5 ns, respectively.

Figure 7-52 TSIP 1x Timing Diagram[1]

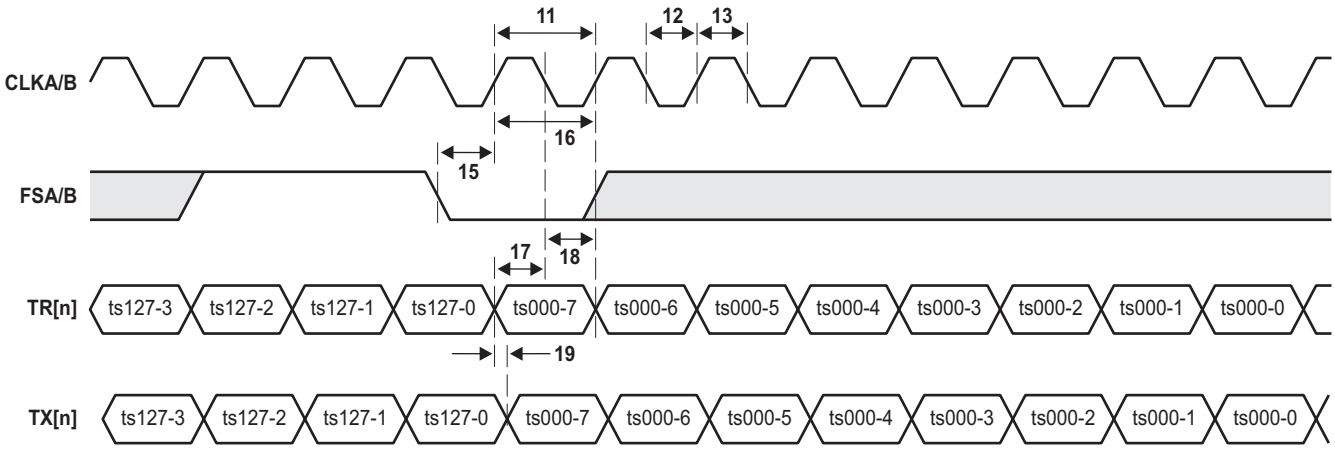

1 Example timeslot numbering shown is for 8.192 Mbps links; 16.384 Mbps links have timeslots numbered 0 through 255 and 32.768 Mbps links have timeslots numbered 0 through 511. The data timing shown relative to the clock and frame sync signals would require a RCVDATD=1023 and a XMTDATD=1023.

Copyright 2014 Texas Instruments Incorporated

7.19 EMIF16 Peripheral

The EMIF16 module provides an interface between DSP and external memories such as NAND and NOR flash. For more information, see the *External Memory Interface (EMIF16) for KeyStone Devices User Guide* in "Related Documentation from Texas Instruments" on page 72.

7.19.1 EMIF16 Electrical Data/Timing

Table 7-77 EMIF16 Asynchronous Memory Timing Requirements [1] [2]
(see Figure 7-53 and Figure 7-54)

No.			Min	Max	Unit
General Timing					
2	t_w(WAIT)	Pulse duration, WAIT assertion and deassertion minimum time		2E	ns
28	t_d(WAIT-WEH)	Setup time, WAIT asserted before WE high		4E + 3	ns
14	t_d(WAIT-OEH)	Setup time, WAIT asserted before OE high		4E + 3	ns
Read Timing					
3	t_c(CEL)	EMIF read cycle time when ew = 0, meaning not in extended wait mode	(RS+RST+RH+3)* E-3	(RS+RST+RH+3)* E+3	ns
3	t_c(CEL)	EMIF read cycle time when ew =1, meaning extended wait mode enabled	(RS+RST+WAIT+ RH+3)* E-3	(RS+RST+WAIT+ RH+3)* E+3	ns
4	t_{osu}(CEL-OEL)	Output setup time from CE low to OE low. SS = 0, not in select strobe mode	(RS+1) * E - 3	(RS+1) * E + 3	ns
5	t_{oh}(OEH-CEH)	Output hold time from OE high to CE high. SS = 0, not in select strobe mode	(RH+1) * E - 3	(RH+1) * E + 3	ns
4	t_{osu}(CEL-OEL)	Output setup time from CE low to OE low in select strobe mode, SS = 1	(RS+1) * E - 3	(RS+1) * E + 3	ns
5	t_{oh}(OEH-CEH)	Output hold time from OE high to CE high in select strobe mode, SS = 1	(RH+1) * E - 3	(RH+1) * E + 3	ns
6	t_{osu}(BEV-OEL)	Output setup time from BE valid to OE low	(RS+1) * E - 3	(RS+1) * E + 3	ns
7	t_{oh}(OEH-BEIV)	Output hold time from OE high to BE invalid	(RH+1) * E - 3	(RH+1) * E + 3	ns
8	t_{osu}(AV-OEL)	Output setup time from A valid to OE low	(RS+1) * E - 3	(RS+1) * E + 3	ns
9	t_{oh}(OEH-AIV)	Output hold time from OE high to A invalid	(RH+1) * E - 3	(RH+1) * E + 3	ns
10	t_w(OEL)	OE active time low, when ew = 0. Extended wait mode is disabled.	(RST+1) * E - 3	(RST+1) * E + 3	ns
10	t_w(OEL)	OE active time low, when ew = 1. Extended wait mode is enabled.	(RST+1) * E - 3	(RST+1) * E + 3	ns
11	t_d(WAITH-OEH)	Delay time from WAIT deasserted to OE# high		4E + 3	ns
12	t_{su}(D-OEH)	Input setup time from D valid to OE high	3		ns
13	t_h(OEH-D)	Input hold time from OE high to D invalid	0.5		ns
Write Timing					
15	t_c(CEL)	EMIF write cycle time when ew = 0, meaning not in extended wait mode	(WS+WST+WH+ 3)* E-3	(WS+WST+WH+ 3)* E+3	ns
15	t_c(CEL)	EMIF write cycle time when ew =1., meaning extended wait mode is enabled	(WS+WST+WAIT +WH+3)* E-3	(WS+WST+WAIT +WH+3)* E+3	ns
16	t_{osu}(CEL-WEL)	Output setup time from CE low to WE low. SS = 0, not in select strobe mode	(WS+1) * E - 3		ns
17	t_{oh}(WEH-CEH)	Output hold time from WE high to CE high. SS = 0, not in select strobe mode	(WH+1) * E - 3		ns
16	t_{osu}(CEL-WEL)	Output setup time from CE low to WE low in select strobe mode, SS = 1	(WS+1) * E - 3		ns
17	t_{oh}(WEH-CEH)	Output hold time from WE high to CE high in select strobe mode, SS = 1	(WH+1) * E - 3		ns
18	t_{osu}(RNW-WEL)	Output setup time from RNW valid to WE low	(WS+1) * E - 3		ns
19	t_{oh}(WEH-RNW)	Output hold time from WE high to RNW invalid	(WH+1) * E - 3		ns
20	t_{osu}(BEV-WEL)	Output setup time from BE valid to WE low	(WS+1) * E - 3		ns
21	t_{oh}(WEH-BEIV)	Output hold time from WE high to BE invalid	(WH+1) * E - 3		ns
22	t_{osu}(AV-WEL)	Output setup time from A valid to WE low	(WS+1) * E - 3		ns
23	t_{oh}(WEH-AIV)	Output hold time from WE high to A invalid	(WH+1) * E - 3		ns

Copyright 2014 Texas Instruments Incorporated

Table 7-77 EMIF16 Asynchronous Memory Timing Requirements [1] [2]
(see Figure 7-53 and Figure 7-54)

No.			Min	Max	Unit
24	t_w(WEL)	WE active time low, when ew = 0. Extended wait mode is disabled.	(WST+1) * E - 3		ns
24	t_w(WEL)	WE active time low, when ew = 1. Extended wait mode is enabled.	(WST+1) * E - 3		ns
26	t_{osu}(DV-WEL)	Output setup time from D valid to WE low	(WS+1) * E - 3		ns
27	t_{oh}(WEH-DIV)	Output hold time from WE high to D invalid	(WH+1) * E - 3		ns
25	t_d(WAITH-WEH)	Delay time from WAIT deasserted to WE# high		4E + 3	ns
End of Table 7-77					

1 E = 1/SYSCLK7, RS = Read Setup, RST = Read Strobe, RH = Read Hold, WS = Write Setup, WST = Write Strobe, WH = Write Hold.
2 WAIT = number of cycles wait is asserted between the programmed end of the strobe period and wait de-assertion.

Figure 7-53 EMIF16 Asynchronous Memory Read Timing Diagram

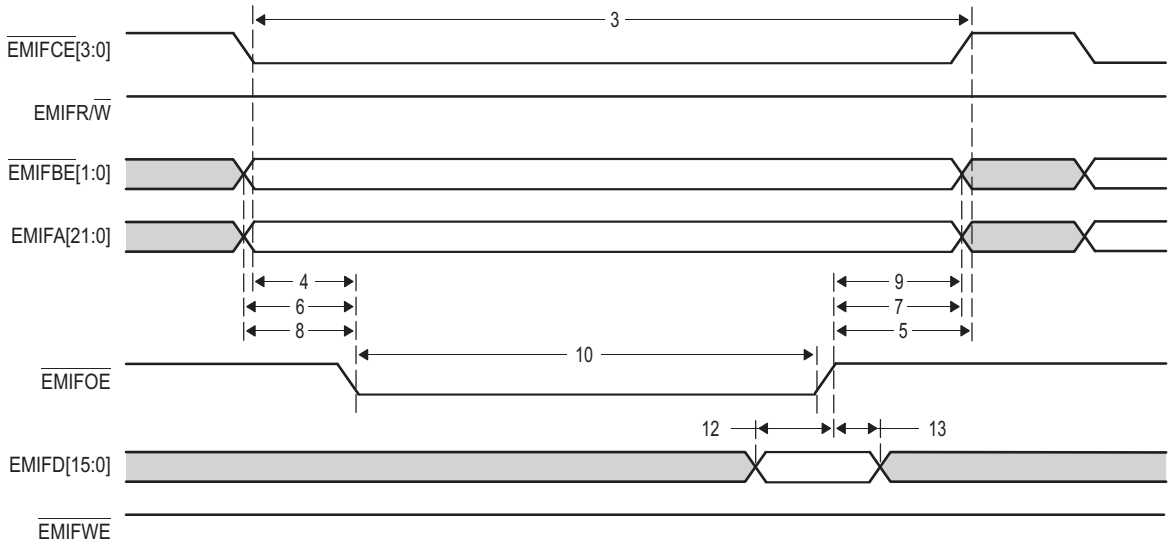

Figure 7-54 EMIF16 Asynchronous Memory Write Timing Diagram

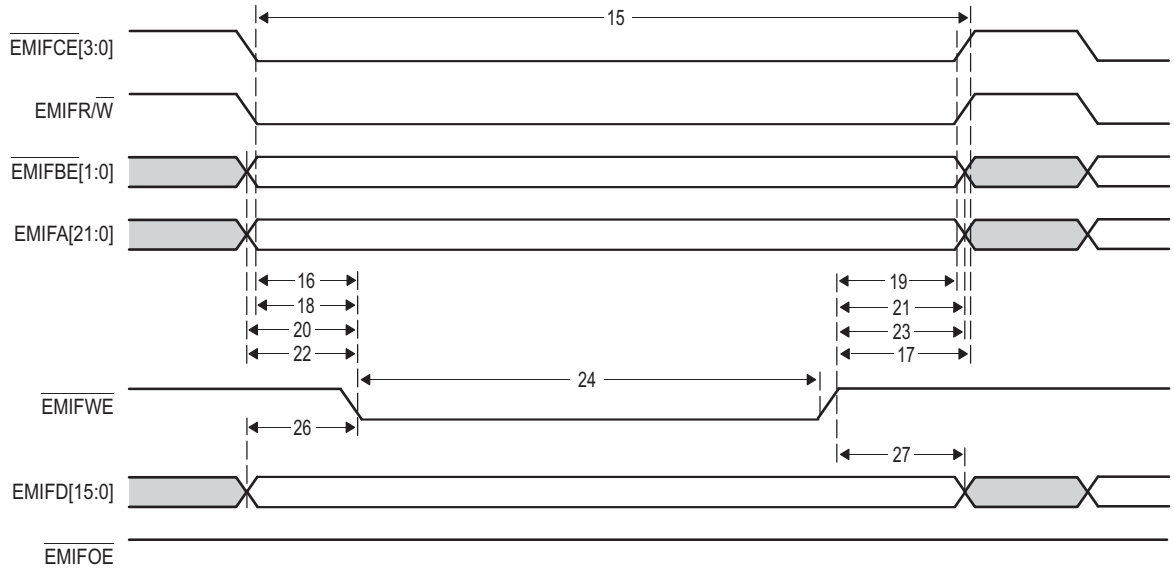

Copyright 2014 Texas Instruments Incorporated

Figure 7-55 EMIF16 EM_WAIT Read Timing Diagram

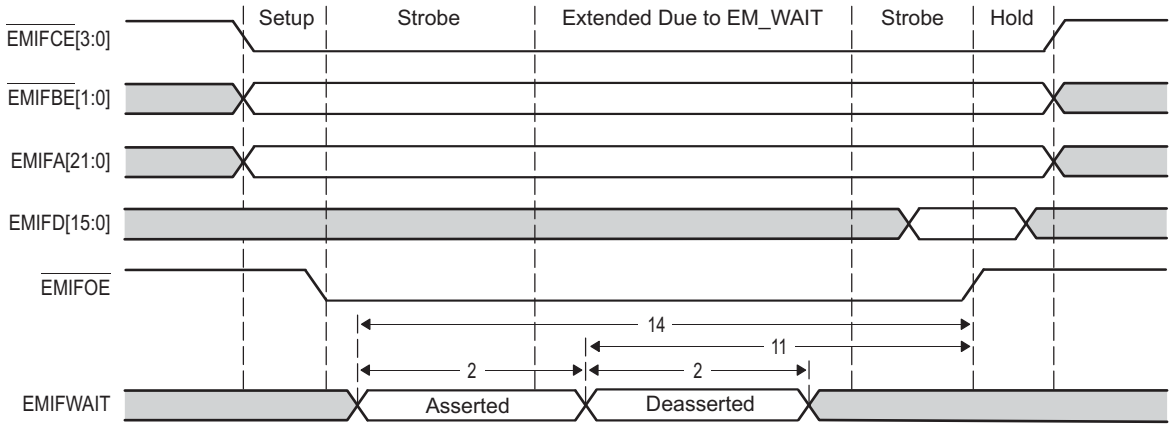

Figure 7-56 EMIF16 EM_WAIT Write Timing Diagram

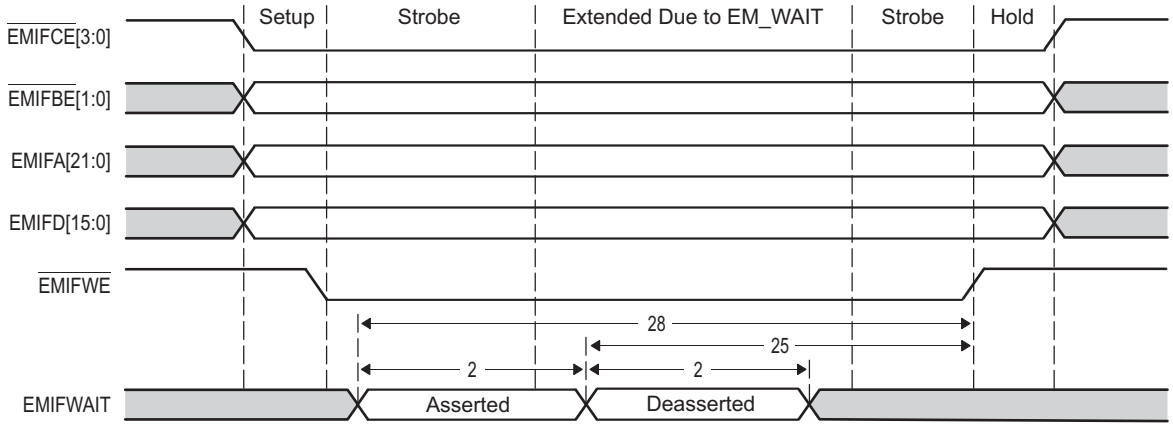

7.20 Packet Accelerator

The packet accelerator provides L2 to L4 classification functionalities. It supports classification for Ethernet, VLAN, MPLS over Ethernet, IPv4/6, GRE over IP, and other session identification over IP such as TCP and UDP ports. It maintains 8K multiple-in, multiple-out hardware queues. It also provides checksum capability as well as some QoS capabilities. It enables a single IP address to be used for a multi-core device. It can process up to 1.5 M pps. The packet accelerator is coupled with the network coprocessor. For more information, see the *Packet Accelerator (PA) for KeyStone Devices User Guide* in "Related Documentation from Texas Instruments" on page 72.

7.21 Security Accelerator

The security accelerator provides wire-speed processing on 1-Gbps Ethernet traffic on IPSec, SRTP, and 3GPP Air interface security protocols. It functions on the packet level with the packet and the associated security context being one of these above three types. The security accelerator is coupled with network coprocessor, and receives the packet descriptor containing the security context in the buffer descriptor, and the data to be encrypted/decrypted in the linked buffer descriptor. For more information, see the *Security Accelerator (SA) for KeyStone Devices User Guide* in "Related Documentation from Texas Instruments" on page 72.

7.22 Gigabit Ethernet (GbE) Switch Subsystem

The Gigabit Ethernet (GbE) switch subsystem provide an efficient interface between the TMS320C6678 DSP and the networked community. The GbE switch subsystem supports 10Base-T (10 Mbits/second [Mbps]), and 100BaseTX (100 Mbps), in half- or full-duplex mode, and 1000BaseT (1000 Mbps) in full-duplex mode, with hardware flow control and quality-of-service (QOS) support. The GbE switch subsystem is coupled with network coprocessor. For more information, see the *Gigabit Ethernet (GbE) Switch Subsystem for KeyStone Devices User Guide* in "Related Documentation from Texas Instruments" on page 72.

Each device has a unique MAC address. There are two registers to hold these values, MACID1 (0x02620110) and MACID2 (0x02620114). All bits of these registers are defined as follows:

Figure 7-57 MACID1 Register

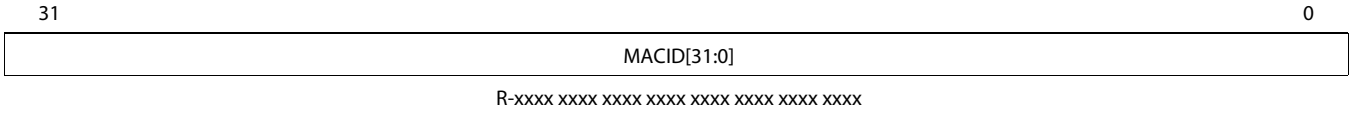

Legend: R = Read only; -x, value is indeterminate

Table 7-78 MACID1 Register Field Descriptions

Bit	Field	Description
31-0	MAC ID[31-0]	MAC ID. A range will be assigned to this device. Each device will consume only one MAC address.
End of Table 7-78		

Figure 7-58 MACID2 Register

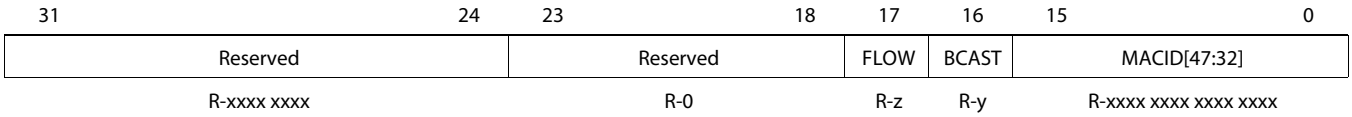

Legend: R = Read only; -x, value is indeterminate

Table 7-79 MACID2 Register Field Descriptions

Bit	Field	Description
31-24	Reserved	Reserved. Values will vary.
23-18	Reserved	Reserved. Read as 0.
17	FLOW	MAC flow control 0 = Off 1 = On
16	BCAST	Default m/b-cast reception 0 = Broadcast 1 = Disabled
15-0	MAC ID[47-0]	MAC ID
End of Table 7-79		

Copyright 2014 Texas Instruments Incorporated

There is one Time Synchronization (CPTS) submodule in the Ethernet switch module for time synchronization. Programming this register selects the clock source for the CPTS_RCLK. See the *Gigabit Ethernet (GbE) Switch Subsystem for KeyStone Devices User Guide* in "Related Documentation from Texas Instruments" on page 72 for the register address and other details about the Time Synchronization module. The register CPTS_RFTCLK_SEL for reference clock selection of Time Synchronization submodule is shown in Figure 7-59.

Figure 7-59 CPTS_RFTCLK_SEL Register

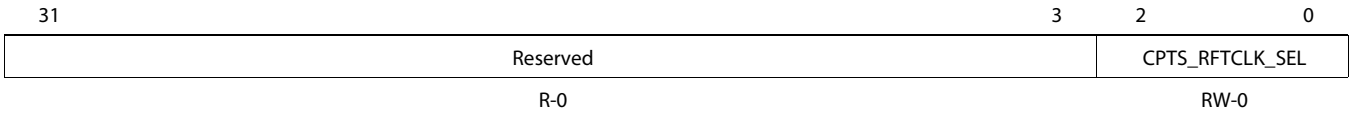

Legend: R = Read only; -x, value is indeterminate

Table 7-80 CPTS_RFTCLK_SEL Register Field Descriptions

Bit	Field	Description
31-3	Reserved	Reserved. Read as 0.
2-0	CPTS_RFTCLK_SEL	Reference Clock Select. This signal is used to control an external multiplexer that selects one of 8 clocks for time sync reference (RFTCLK). This CPTS_RFTCLK_SEL value can be written only when the CPTS_EN bit is cleared to 0 in the TS_CTL register. 000 = SYSCLK2 001 = SYSCLK3 010 = TIMI0 011 = TIMI1 100 = TSIP0 CLK_A 101 = TSIP0 CLK_B 110 = TSIP1 CLK_A 111 = TSIP1 CLK_B
End of Table 7-80		

7.23 Management Data Input/Output (MDIO)

The management data input/output (MDIO) module implements the 802.3 serial management interface to interrogate and controls up to 32 Ethernet PHY(s) connected to the device, using a shared two-wire bus. Application software uses the MDIO module to configure the auto-negotiation parameters of each PHY attached to the GbE switch subsystem, retrieve the negotiation results, and configure required parameters in the GbE switch subsystem module for correct operation. The module is designed to allow almost transparent operation of the MDIO interface, with very little maintenance from the core processor. For more information, see the *Gigabit Ethernet (GbE) Switch Subsystem for KeyStone Devices User Guide* in "Related Documentation from Texas Instruments" on page 72.

Table 7-81 MDIO Timing Requirements
See Figure 7-60

No.			Min	Max	Unit
1	tc(MDCLK)	Cycle time, MDCLK	400		ns
2	tw(MDCLKH)	Pulse duration, MDCLK high	180		ns
3	tw(MDCLKL)	Pulse duration, MDCLK low	180		ns
4	tsu(MDIO-MDCLKH)	Setup time, MDIO data input valid before MDCLK high	10		ns
5	th(MDCLKH-MDIO)	Hold time, MDIO data input valid after MDCLK high	0		ns
	tt(MDCLK)	Transition time, MDCLK		5	ns
End of Table 7-81					

Figure 7-60 MDIO Input Timing

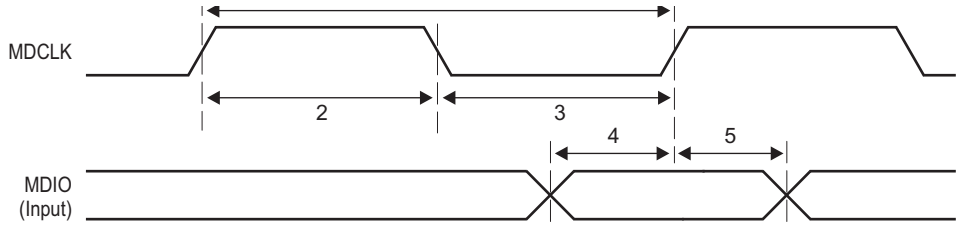

Table 7-82 MDIO Switching Characteristics
See Figure 7-61

No.		Parameter	Min	Max	Unit
6	td(MDCLKL-MDIO)	Delay time, MDCLK low to MDIO data output valid		100	ns
End of Table 7-82					

Figure 7-61 MDIO Output Timing

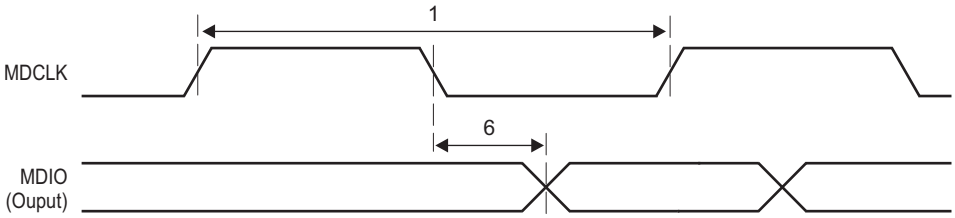

Copyright 2014 Texas Instruments Incorporated

7.24 Timers

The timers can be used to: time events, count events, generate pulses, interrupt the CPU and send synchronization events to the EDMA3 channel controller.

7.24.1 Timers Device-Specific Information

The TMS320C6678 device has sixteen 64-bit timers in total. Timer0 through Timer7 are dedicated to each of the eight CorePacs as a watchdog timer and can also be used as general-purpose timers. Each of the other eight timers can also be configured as a general-purpose timer only, with each timer programmed as a 64-bit timer or as two separate 32-bit timers.

When operating in 64-bit mode, the timer counts either VBUS clock cycles or input (TINPLx) pulses (rising edge) and generates an output pulse/waveform (TOUTLx) plus an internal event (TINTLx) on a software-programmable period.

When operating in 32-bit mode, the timer is split into two independent 32-bit timers. Each timer is made up of two 32-bit counters: a high counter and a low counter. The timer pins, TINPLx and TOUTLx are connected to the low counter. The timer pins, TINPHx and TOUTHx are connected to the high counter.

When operating in watchdog mode, the timer counts down to 0 and generates an event. It is a requirement that software writes to the timer before the count expires, after which the count begins again. If the count ever reaches 0, the timer event output is asserted. Reset initiated by a watchdog timer can be set by programming "Reset Type Status Register (RSTYPE)" on page 147 and the type of reset initiated can set by programming "Reset Configuration Register (RSTCFG)" on page 148. For more information, see the *Timer64P for KeyStone Devices User Guide* in "Related Documentation from Texas Instruments" on page 72.

7.24.2 Timers Electrical Data/Timing

The tables and figure below describe the timing requirements and switching characteristics of Timer0 through Timer15 peripherals.

Table 7-83 Timer Input Timing Requirements (1)
(see Figure 7-62)

No.			Min	Max	Unit
1	$t_{w(TINPH)}$	Pulse duration, high	12C		ns
2	$t_{w(TINPL)}$	Pulse duration, low	12C		ns
End of Table 7-83					

1 C = 1/SYSCLK1 frequency in ns.

Table 7-84 Timer Output Switching Characteristics (1)
(see Figure 7-62)

No.	Parameter		Min	Max	Unit
3	$t_{w(TOUTH)}$	Pulse duration, high	12C - 3		ns
4	$t_{w(TOUTL)}$	Pulse duration, low	12C - 3		ns
End of Table 7-84					

1 C = 1/SYSCLK1 frequency in ns.

Figure 7-62 Timer Timing

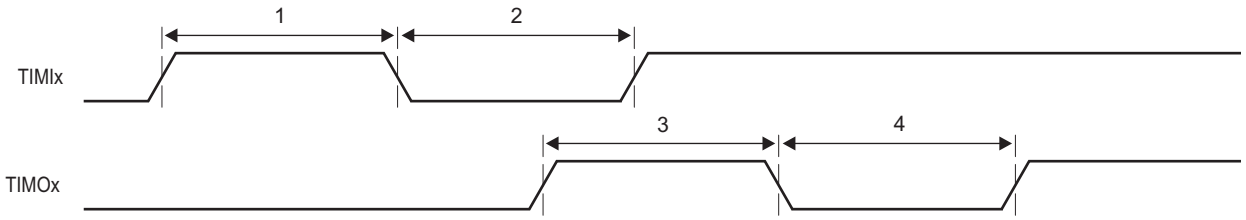

7.25 Serial RapidIO (SRIO) Port

The SRIO port on the TMS320C6678 device is a high-performance, low pin-count interconnect aimed for embedded markets. The use of the RapidIO interconnect in a baseband board design can create a homogeneous interconnect environment, providing even more connectivity and control among the components. RapidIO is based on the memory and device addressing concepts of processor buses where the transaction processing is managed completely by hardware. This enables the RapidIO interconnect to lower the system cost by providing lower latency, reduced overhead of packet data processing, and higher system bandwidth, all of which are key for wireless interfaces. For more information, see the *Serial RapidIO (SRIO) for KeyStone Devices User Guide* in "Related Documentation from Texas Instruments" on page 72.

Copyright 2014 Texas Instruments Incorporated

7.26 General-Purpose Input/Output (GPIO)

7.26.1 GPIO Device-Specific Information

On the TMS320C6678, the GPIO peripheral pins GP[15:0] are also used to latch configuration pins. For more detailed information on device/peripheral configuration and the C6678 device pin muxing, see "Device Configuration" on page 73. For more information on GPIO, see the *General Purpose Input/Output (GPIO) for KeyStone Devices User Guide* "Related Documentation from Texas Instruments" on page 72.

7.26.2 GPIO Electrical Data/Timing

Table 7-85 GPIO Input Timing Requirements

No.			Min	Max	Unit
1	$t_{w(GPOH)}$	Pulse duration, GPOx high	12C [1]		ns
2	$t_{w(GPOL)}$	Pulse duration, GPOx low	12C		ns
End of Table 7-85					

1 C = 1/SYSCLK1 frequency in ns.

Table 7-86 GPIO Output Switching Characteristics

No.		Parameter	Min	Max	Unit
3	$t_{w(GPOH)}$	Pulse duration, GPOx high	36C [1] - 8		ns
4	$t_{w(GPOL)}$	Pulse duration, GPOx low	36C - 8		ns
End of Table 7-86					

1 C = 1/SYSCLK1 frequency in ns.

Figure 7-63 GPIO Timing

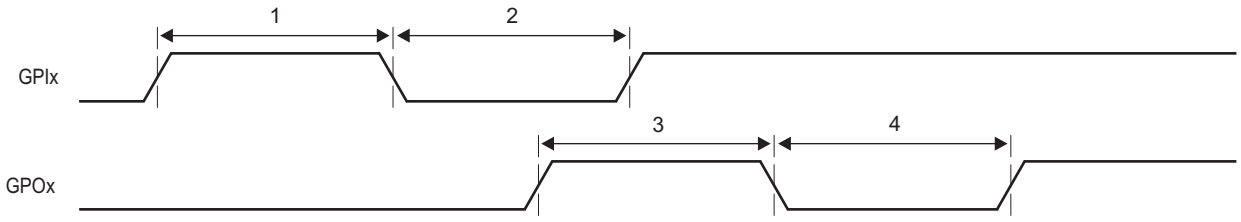

7.27 Semaphore2

The device contains an enhanced semaphore module for the management of shared resources of the DSP C66x CorePacs. The semaphore enforces atomic accesses to shared chip-level resources so that the read-modify-write sequence is not broken. The semaphore block has unique interrupts to each of the cores to identify when that core has acquired the resource.

Semaphore resources within the module are not tied to specific hardware resources. It is a software requirement to allocate semaphore resources to the hardware resource(s) to be arbitrated.

The semaphore module supports 8 masters and contains 32 semaphores to be used within the system.

The semaphore module is accessible only by masters with privilege ID (privID) 0 to 7, which means only CorePac 0 to 7 or the EDMA transactions initiated by CorePac 0 to 7 can access the semaphore module.

If the remote device wants to access the semaphore module, the HyperLink configuration register must be appropriately configured, so the remote device can send transactions with the desired privID value to the local semaphore module. For more information on HyperLink configuration, see the *HyperLink for KeyStone Devices User Guide* in "Related Documentation from Texas Instruments" on page 72.

There are two methods of accessing a semaphore resource:

- Direct Access: A core directly accesses a semaphore resource. If free, the semaphore will be granted. If not, the semaphore is not granted.
- Indirect Access: A core indirectly accesses a semaphore resource by writing it. Once it is free, an interrupt notifies the CPU that it is available.

7.28 Emulation Features and Capability

7.28.1 Advanced Event Triggering (AET)

The TMS320C6678 device supports advanced event triggering (AET). This capability can be used to debug complex problems as well as understand performance characteristics of user applications. AET provides the following capabilities:

- **Hardware Program Breakpoints:** specify addresses or address ranges that can generate events such as halting the processor or triggering the trace capture.
- **Data Watchpoints:** specify data variable addresses, address ranges, or data values that can generate events such as halting the processor or triggering the trace capture.
- **Counters:** count the occurrence of an event or cycles for performance monitoring.
- **State Sequencing:** allows combinations of hardware program breakpoints and data watchpoints to precisely generate events for complex sequences.

For more information on AET, see the following documents in "Related Documentation from Texas Instruments" on page 72:

- *Using Advanced Event Triggering to Find and Fix Intermittent Real-Time Bugs* application report
- *Using Advanced Event Triggering to Debug Real-Time Problems in High Speed Embedded Microprocessor Systems* application report

Copyright 2014 Texas Instruments Incorporated

7.28.2 Trace

The C6678 device supports Trace. Trace is a debug technology that provides a detailed, historical account of application code execution, timing, and data accesses. Trace collects, compresses, and exports debug information for analysis. Trace works in real-time and does not impact the execution of the system.

For more information on board design guidelines for Trace Advanced Emulation, see the *Emulation and Trace Headers Technical Reference Manual* in "Related Documentation from Texas Instruments" on page 72.

7.28.2.1 Trace Electrical Data/Timing

Table 7-87 DSP Trace Switching Characteristics (1)
(see Figure 7-64)

No.	Parameter		Min	Max	Unit
1	t_w(EMUnH)	Pulse duration, EMUn high detected at 50% Voh	2.4		ns
1	t_w(EMUnH)90%	Pulse duration, EMUn high detected at 90% Voh	1.5		ns
2	t_w(EMUnL)	Pulse duration, EMUn low detected at 50% Voh	2.4		ns
2	t_w(EMUnL)10%	Pulse duration, EMUn low detected at 10% Voh	1.5		ns
3	t_{sko}(EMUn)	Output skew time, time delay difference between EMUn pins configured as trace	-1	1	ns
	t_{sldp_o}(EMUn)	Output slew rate EMUn	3.3		V/ns
End of Table 7-87					

1 Over recommended operating conditions.

Table 7-88 STM Trace Switching Characteristics (1)
(see Figure 7-64)

No.	Parameter		Min	Max	Unit
1	t_w(EMUnH)	Pulse duration, EMUn high detected at 50% Voh with 60/40 duty cycle	4		ns
1	t_w(EMUnH)90%	Pulse duration, EMUn high detected at 90% Voh	3.5		ns
2	t_w(EMUnL)	Pulse duration, EMUn low detected at 50% Voh with 60/40 duty cycle	4		ns
2	t_w(EMUnL)10%	Pulse duration, EMUn low detected at 10% Voh	3.5		ns
3	t_{sko}(EMUn)	Output skew time, time delay difference between EMUn pins configured as trace	-1	1	ns
	t_{sldp_o}(EMUn)	Output slew rate EMUn	3.3		V/ns
End of Table 7-88					

1 Over recommended operating conditions.

Figure 7-64 Trace Timing

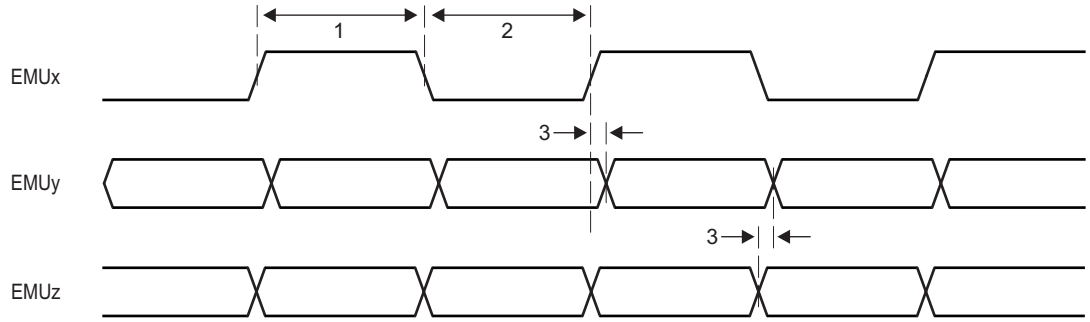

EMUx represents the EMU output pin configured as the trace clock output.
EMUy and EMUz represent all of the trace output data pins.

7.28.3 IEEE 1149.1 JTAG

The JTAG interface is used to support boundary scan and emulation of the device. The boundary scan supported allows for an asynchronous TRST and only the 5 baseline JTAG signals (e.g., no EMU[1:0]) required for boundary scan. Most interfaces on the device follow the Boundary Scan Test Specification (IEEE1149.1), while all of the SerDes (SRIO and SGMII) support the AC-coupled net test defined in *AC-Coupled Net Test Specification* (IEEE1149.6).

It is expected that all compliant devices are connected through the same JTAG interface, in daisy-chain fashion, in accordance with the specification. The JTAG interface uses 1.8-V LVCMOS buffers, compliant with the *Power Supply Voltage and Interface Standard for Nonterminated Digital Integrated Circuit Specification* (EAI/JESD8-5).

7.28.3.1 IEEE 1149.1 JTAG Compatibility Statement

For maximum reliability, the C6678 DSP includes an internal pulldown (IPD) on the TRST pin to ensure that TRST will always be asserted upon power up and the DSP's internal emulation logic will always be properly initialized when this pin is not routed out. JTAG controllers from Texas Instruments actively drive TRST high. However, some third-party JTAG controllers may not drive TRST high but expect the use of an external pullup resistor on TRST. When using this type of JTAG controller, assert TRST to initialize the DSP after powerup and externally drive TRST high before attempting any emulation or boundary scan operations.

7.28.3.2 JTAG Electrical Data/Timing

Table 7-89 JTAG Test Port Timing Requirements
(see Figure 7-65)

No.			Min	Max	Unit
1	$t_{c(TCK)}$	Cycle time, TCK	34		ns
1a	tw(TCKH)	Pulse duration, TCK high (40% of tc)	13.6		ns
1b	tw(TCKL)	Pulse duration, TCK low(40% of tc)	13.6		ns
3	tsu(TDI-TCK)	input setup time, TDI valid to TCK high	3.4		ns
3	tsu(TMS-TCK)	input setup time, TMS valid to TCK high	3.4		ns
4	th(TCK-TDI)	input hold time, TDI valid from TCK high	17		ns
4	th(TCK-TMS)	input hold time, TMS valid from TCK high	17		ns
End of Table 7-89					

Table 7-90 JTAG Test Port Switching Characteristics [1]
(see Figure 7-65)

No.	Parameter		Min	Max	Unit
2	$t_{d(TCKL-TDOV)}$	Delay time, TCK low to TDO valid		13.6	ns
End of Table 7-90					

1 Over recommended operating conditions.

Copyright 2014 Texas Instruments Incorporated

Figure 7-65 JTAG Test-Port Timing

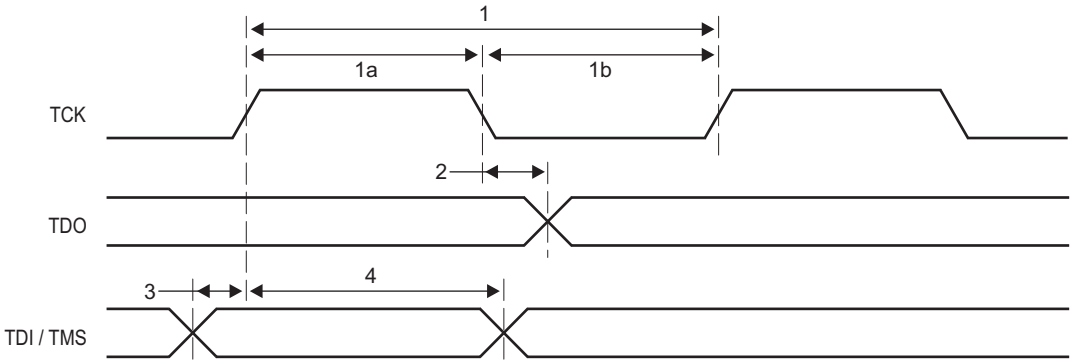

8 Revision History

Revision E

Updated EDMA addressing mode descriptions. (Page 160)
Updated BWADJ value setting description in MAIN/DDR3/PASS PLL registers (Page 150)
Added info for output clocks to 1.8-V LVCMOS Signal Transition Levels paragraph (Page 120)
Updated Main PLL and PLL Controller figure: removed /2 label from PLL object (Page 140)
Updated Rise and Fall Transition Time Voltage Reference Levels figure to include label for lower transition (Page 120)
Clarified SmartReflex pin output type (Page 53)
Clarified table caption and first column heading (Page 167)
Corrected SmartReflex peripheral I/O Buffer Type from LVCMOS category to Open drain (Page 119)
Revised Main PLL Clock Input Transition Time figure (Page 152)
Corrected EMIF16 Boot Device Configuration Bit Fields (Page 26)
Added 1.4-GHz support for C6678 device across entire document (Page 1)
Added GYP package to Device Characteristics table (Page 13)
Added GYP package to Mechanical Data Chapter (Page 241)
Restored Parameter Information section (Page 120)
Updated Core Before IO Power Sequencing diagram, changing clock signal SYSCLK1P&N to REFCLK1P&N (Page 123)
Updated IO Before Core Power Sequencing diagram, changing clock signal SYSCLK1P&N to REFCLK1P&N (Page 125)
Updated the PASS PLL Block Diagram (Page 156)
Updated the Trace timing diagram (Page 233)
Updated Parameter Table Index bit field in I2C boot configuration (Page 29)
Updated Parameter Table Index bit field in SPI boot configuration (Page 30)
Updated PKTDMA_PRI_ALLOC register to be CHIP_MSIC_CTL register with new bit field added. (Page 77)
Updated OUTPUT_DIVIDE default value and PLL clock formula in PLL Settings section (Page 38)
Updated slow peripherals in SYSCLK7 description (Page 142)
Updated Chip Select field description in SPI boot device configuration table (Page 30)
Added DSP_SUSP_CTL register section (Page 77)

Revision D

Corrected NMI7-0 from bit fields 23-16 to bit fields 15-8 in LRSTNMIPINSTAT and LRSTNMIPINSTAT_CLR registers (Page 80)
Added Extended Boot Mode table in Boot Device Field section (Page 25)
Updated event PO_VP_SMPSACK_INTR to be Reserved in CIC3 event table (Page 183)
Updated Trace Electrical Timing tables and Timing diagrams (Page 233)
Updated event PO_VCON_SMPSERR_INTR be Reserved in CIC0/1 Event Inputs table (Page 172)
Added Boot Parameter Table section (Page 31)
Added new section DDR3 Memory Controller Race Condition Consideration to include the last 3 paragraphs originally in section 7.11.1 (Page 205)
Added REFCLK description in power sequencing section (Page 122)
Added table of Bootloader section in L2 SRAM in Boot Sequence section (Page 23)
Updated SYSCLK1 to REFCLK in power sequencing section to refer to the clock source of main PLL (Page 123)
Updated note in power sequencing that each supply must ramp monotonically and must reach a stable valid level within 20 ms (Page 123)
Corrected differential clock rise and fall time in the PLL timing table for the clock inputs that feed into the LJCB clock buffers (Page 151)
Changed all footnote references from CORECLK to SYSCLK1 (Page 231)
Updated PCIe privilege level from "Supervisor" to "Driven by PCIe module" (Page 193)
Corrected "Reserved" to be "Assert local reset to all CorePacs" in LRESET and NMI Decoding table (Page 189)
Added MPU Registers Reset Values section (Page 203)
Added "Initial Startup" row for CVDD in Recommended Operating Conditions table (Page 117)
Added DDR3PLLCTL1 and PASSPLLCTL1 registers to Device Status Control Registers table (Page 76)
Updated all SerDes clocks to discrete frequencies in the Clock Input Timing Requirements table (Page 151)
Corrected tj(CORECLKN/P) max value from 100 to 0.02*tc(CORECLKN/P) (Page 151)
Corrected tj(DDRCLKN/P) max value from 0.025*tc(DDRCLKN/P) to 0.02*tc(DDRCLKN/P) (Page 155)

Copyright 2014 Texas Instruments Incorporated

Corrected tj(PASSCLKN/P) max value from 100 to 0.02*tc(PASSCLKN/P) (Page 158)
Updated the descriptions of how Semaphore module is accessible (Page 232)
Added Debug Subsystem Configuration region to memory map table (Page 19)
Added HOUT timing diagram in Host Interrupt Output section (Page 191)
Added note to DDR3 PLL initialization sequence (Page 154)
Corrected MPU0 Memory Protection End Address from 0x026203FF to 0x026207FF (Page 192)
Revised IPCGRH register description (Page 88)
Corrected DDR3 transfer rate from 1033 MTS to 1066 MTS (Page 205)
Added CVDD and SmartReflex voltage parameter in SmartReflex switching table (Page 128)
Removed DDR3 PLL initialization sequence from data manual to PLL controller user guide (Page 154)
Removed PASS PLL initialization sequence from data manual to PLL controller user guide (Page 157)
Updated chip select from CS[5:2] to CE[3:0] in EMIF16 Peripheral section (Page 223)
Updated EMIF chip select from CS[5:2] to CE[3:0] in Memory Map Summary table (Page 23)
Updated DDR3 PLL initialization sequence (Page 155)
Added footnote for DDR3 EMIF data in memory map summary table (Page 23)
Updated Tracer descriptions across the data manual (Page 17)
Corrected PASSCLK(N/P) max cycle time from 6.4 ns to 25 ns (Page 158)
Updated the Timer numbering across the whole document (Page 18)
Corrected PASS PLL clock to SRIOSGMIICLK in the boot device values table for Ethernet. (Page 25)
Added clarification for RESETSTATz input current (Page 118)
Added note for VCNTLID register that it is available for debug purpose only (Page 131)
Added STM Trace Switching Characteristics table (Page 233)
Removed the incorrect description of 16-Bit EMIF in Features section (Page 1)
Updated th(MDCLKH-MDIO) value from 10 ns to 0 ns in MDIO Timing Requirements table (Page 228)
Updated the description of NAND in the footnote of memory map summary table (Page 23)
Updated tw(DPnH) and tw(DPnL) descriptions in Trace Switching Characteristics tables (Page 233)
Updated I2C master mode table that bits[9:8] are used for mode selection (Page 28)
Updated the I2C passive mode table that bits[9:8] are used for mode selection and actual value on the bus is 0x19+bits[7:5] (Page 29)
Updated I2C data rate configuration descriptions in I2C Master Mode Configuration table (Page 28)
Added PLLSELECT bit to PASSPLLCTL1 Register (Page 157)
Added SPI device-specific support details (Page 212)
Corrected that only the sticky bits in PCIe MMRs will be retained after soft reset (Page 136)

Revision C

Added note stating that both SGMII ports can be used for boot (Page 27)
Updated the DDR3 MMR descriptions and deleted the unrelated PCIe MMR descriptions for soft reset. (Page 136)
Corrected physical 36-bit addresses of DDR3 EMIF configuration/data (Page 23)
Added TeraNet connection figures and added bridge numbers to the connection tables. (Page 99)
Restricted Output Divide of SECCTL register to max value of divide by 2 (Page 144)
Updated DEVSPEED register for both silicon rev1.0 and 2.0 (Page 96)
Removed RESETFULLz parameter from 4b timing description (Page 124)
Added supported data rates for HyperLink (Page 215)
Changed chip level interrupt controller name from INTC to CIC (Page 165)
Changed TPCC to EDMA3CC and TPTC to EDMA3TC (Page 159)
Added PLLRST bit to DDR3PLLCTL1 register (Page 154)
Added PLLRST bit to PASSPLLCTL1 register (Page 157)
Deleted INTC0 register map address offset 0x4 and 0x8, which are Reserved (Page 183)
Corrected the SGMII SerDes clock to PASS clock in PASS PLL configuration description (Page 38)
Corrected PASS PLL clock from SRIOSGMIICLK to PASSCLK in the boot device values table for Ethernet. (Page 25)
Corrected the SPI and DDR3/HyperLink Config end addressed (Page 23)
Added the DDR3 PLL Initialization Sequence (Page 154)
Added the Main PLL and PLL Controller Initialization Sequence (Page 151)
Added the PASS PLL Initialization Sequence (Page 157)

Added HyperLink interrupt event section (Page 215)
Added events #144-159 to INTC2 event input table (Page 178)
Added DEVSPEED Register section. (Page 96)
Added more description to Boot Sequence section (Page 23)
Corrected a typo, changed DDRCLKN to DDRCLKP (Page 155)

Revision B

Removed section 7.1 Parameter Information (Page 120)
Corrected PASS PLL clock source description from Main PLL mux to CORECLK clock reference sources (Page 156)
Corrected MACID2 address from 0x02600114 to 0x02620114 (Page 226)
Added EMIF16 Electrical Data/Timing section (Page 223)
Added TSIP Electrical Data/Timing section (Page 221)
Updated SPI Timing section (Page 212)
Changed Data Rate 3 to Reserved from 12.5GBs in HyperLink configuration field table (Page 30)
Corrected the Device ID field to be bits 5 to 3 in Ethernet Configuration Field figure and table (Page 27)
Corrected the field bits of No Boot/EMIF16 configuration field figure and table (Page 26)

Revision A

Added note to RSISO register that both SRIOISO and SRISO will be set by boot ROM code during boot (Page 149)
Removed AIF2ISO from Reset Isolation Register (Page 149)
Added information of on-chip divider (=3) for PA in the PLL Boot Configuration Settings section (Page 38)
Changed "no support for MSI" to "support for legacy INTx" for PCIe in legacy EP mode description in Device Status Register Field Descriptions table (Page 78)
Changed "no support for MSI" to "support for legacy INTx" for PCIe legacy end point description in Device Configuration Pins table (Page 73)
Added "The packet accelerator is coupled with network coprocessor" in the Packet Accelerator section (Page 225)
Added Network Coprocessor document link (Page 72)
Changed 2 to OUTPUT_DIVIDE in the clock formula in PLL Boot Configuration Settings section (Page 38)
Changed EMAC to GbE switch subsystem (Page 226)
Changed EMAC to Gigabit Ethernet (GbE) Switch Subsystem (Page 228)
Changed EMAC to Gigabit Ethernet Switch (Page 72)
Changed EMAC to Network Coprocessor Packet DMA (Page 98)
Changed PA_SS into Network Coprocessor Packet DMA in Device Master Settings table (Page 192)
Changed PA_SS into PASS in the Clock Sequencing table (Page 127)
Changed Packet Accelerator into Network Coprocessor and corrected the memory address in the memory map summary table (Page 17)
Changed Packet Accelerator into network coprocessor in Security Accelerator section (Page 225)
Changed Packet Accelerator into Network Coprocessor in the Device Configuration Pins table. (Page 73)
Changed Packet Accelerator subsystem into Network Coprocessor (Page 156)
Changed Packet Subsystem to Network Coprocessor (PASS PLL) in Terminal Functions table (Page 44)
Changed PASS into Network Coprocessor (PASS) (Page 141)
Changed PS_SS_CLK PLL to PASS_CLK PLL in Terminal Functions table (Page 44)
Deleted section 5.5 "C66x CorePac Resets" to avoid confusion and the reset details are covered in "Reset Controller" section (Page 108)
Removed EMAC in Characteristics of the device Processor table (Page 13)
Added BGA Package row into Characteristics of Processor table (Page 13)
Corrected End and Bytes of DDR3 EMIF Configuration section in Memory Map Summary table (Page 17)
Corrected BAR number from BAR1/2 to BAR2/3 and BAR3/4 to BAR4/5 in PCIe Window Sizes table (Page 28)
Deleted EDMA3 Peripheral Register Description section, which is covered in EDMA user guide (Page 159)
Added SerDes PLL Status and Config registers (Page 74)
Added "to DDR3 memory space" to the first step of workaround (Page 205)
Added "with TCCMOD=0" after "e.g. EDMA3 transfer controllers" (Page 205)
Added CPTS_RFTCLK_SEL register in GbE Switch Subsystem section (Page 226)
Changed "DSP/2" to "CPU/2" and "DSP/3" to "CPU/3" (Page 98)
Changed the word "can" to "must" in the sentence "for most applications increment mode can be used" to specify it is a hard rule. (Page 160)

Copyright 2014 Texas Instruments Incorporated

Corrected the tw(RXSTOP15) and tw(RXSTOP2) values in UART Timing Requirements table (Page 219)
Changed "sleep boot" to "No boot" in Sub-Mode field of No boot/EMIF16 Configuration Bit Field Descriptions table (Page 26)
Changed Section 2.5.2.1 title from "Sleep/EMIF16" to "No Boot/EMIF16" (Page 26)
Corrections Applied to I2C Passive Mode Device Configuration Bit Fields (Page 29)
Corrections Applied to I2C Passive Mode Device Configuration Field Descriptions (Page 29)
Modified description of value 0 to EMIF16/No Boot in Boot Device Values table (Page 25)
Corrected SRIO configuration memory map from 0x02900000~0x02907FFF to 0x02900000~0x02920FFF (Page 17)
Added thermal values into the Thermal Resistance Characteristics table. (Page 241)
Added DDR3PLLCTL1 register and field description table (Page 154)
Added more description to pin PTV15 in the Terminal Functions table (Page 45)
Added PASSPLLCTL1 register and field descriptions (Page 157)
Added Master ID Settings table. (Page 193)
Added the table of Power Supply to Peripheral I/O Mapping (Page 119)
Changed PROGn_MPEAR register table format and reset value format (Page 200)
Changed PROGn_MPSAR registers table format and reset value format (Page 200)
Modified the figure of SmartReflex 4-Pin VID Interface Timing (Page 128)
Modified the table of SmartReflex 4-Pin VID Interface Switching Characteristics (Page 128)
Added PROG4 registers set into MPU1 Registers table (Page 196)
Changed number of programmable ranges supported from 4 to 5 for MPU1 (Page 192)
Modified reset values in MPU Configuration Register table (Page 199)
Modified Table 2-13 to include 1000 MHz and 1250 MHz columns. (Page 38)
Added BWADJ[11:8] to MAINPLLCTL1 register table and description. (Page 150)
Changed Privilege ID from the second column to the first column (Page 192)
Changed PROG3_MPEA to PROG3_MPEAR in MPU1 Registers table (Page 196)
Changed Programmable range enumeration from 1-N based to 0-N based in MPU Register Map. (Page 195)
Changed SRIO_CPPI and SRIO_M rows to the single row (Page 192)
Changed the master from Reserved to HyperLink with Privilege ID 13 and 14 (Page 192)
Modified BWADJ descriptions in MAINPLLCTL0 and MAINPLLCTL1 registers (Page 150)
Modified SECCTL register reference place in the note. (Page 151)
Corrected Clock Sequencing table - Removed ALTCORECLK reference, Corrected SYSCLK as CORECLK. (Page 127)
Corrections Applied to I2C Boot Device Configuration Bit Fields (Page 28)
Corrections Applied to Sleep / EMIF16 Boot Device Configuration Bit Fields (Page 26)
Updated Device Configuration Pins Table; PACLKSEL Functional Description (Page 73)
Updated Reset Electrical Data / Timing section. Included updated reset requirements. (Page 138)
Updated Reset Electrical Data; Included updated Reset Requirements. (Page 138)
Updated Table 2-3 Boot Mode Pins: Boot Device Values description of the Ethernet (SGMII) boots. (Page 25)
Removed the SRIOSMGIICLK, MCMCLK, and PCIECLK transition timing values with respect to VOH and VOL within the Main PLL Controller timing requirements. (Page 151)
Updated Terminal Descriptions of TSIP Pins (Page 54)
Updated EMIF16 timing requirements table (Page 223)
Added MAINPLLCTL1, Renamed DDR3PLLCTL0 to DDR3PLLCT, Renamed PAPLLCTL0 to PAPLLCTL (Page 74)
Corrected the size of TETBs for the 4 cores from 16k to 4k (Page 17)
Corrected the size of TETBs for the 4 cores from 16k to 4k (Page 17)
Updated the complete Power-up sequencing section. RESETFULL must always de-assert after POR (Page 122)
Added section NMI and LRSET. (Page 189)
Corrected Extended Temperature range - Changed 105C to 100C for the top end. (Page 1)
Added BWADJ bit field to DDR3 PLL Control Register. (Page 153)
Added BWADJ bit field to PASS PLL Control Register. (Page 156)
Added MAINPLLCTL1 register table and description. (Page 150)
Added more detailed information on valid levels for CLKs and IOs during the power sequencing. (Page 122)
Added Note on level interrupts and use of EOI handshaking. (Page 165)
Corrected Address Range of I2C MMRs (Page 208)
Corrected PACLKSEL bitfield description. (Page 78)

Copyright 2014 Texas Instruments Incorporated

Corrected RSV01 should be pulled up to 1.8 V and RSV08 should be tied to GND (Page 55)
Changed CVDD Range; Corrected CVDD and CVDD1 Descriptions (CVDD: Core Supply -> SR Core Supply) (CVDD1: SR Core Supply -> Core Supply) (Page 117)
Added more detailed information on valid levels for CLKs and IOs during the power sequencing. (Page 122)
Added to table "Terminal Functions - Signals and Control by Function", signals - RSV0A and RSV0B. (Page 44)
Corrected the timing pointers to point the correct figure (Page 138)
Changed incorrect reserved address in Memory Map Summary - 02780400 -> 02778400 (Page 17)
Corrected Commercial Temperature range - Changed 100C to 85C for the top end. (Page 1)

Copyright 2014 Texas Instruments Incorporated

9 Mechanical Data

9.1 Thermal Data

Table 9-1 shows the thermal resistance characteristics for the CYP PBGA 841-pin package with Pb-free die bumps and Pb-free solder balls.

Table 9-1 Thermal Resistance Characteristics for CYP (PBGA 841-Pin Package)

No.			°C/W
1	$R\theta_{JC}$	Junction-to-case	0.18
2	$R\theta_{JB}$	Junction-to-board	3.71
End of Table 9-1			

Table 9-2 shows the thermal resistance characteristics for the GYP PBGA 841-pin package with Pb-free die bumps and Pb-based solder balls.

Table 9-2 Thermal Resistance Characteristics for GYP (PBGA 841-Pin Package)

No.			°C/W
1	$R\theta_{JC}$	Junction-to-case	0.18
2	$R\theta_{JB}$	Junction-to-board	3.71
End of Table 9-2			

9.2 Packaging Information

The following packaging information reflects the most current released data available for the designated device(s). This data is subject to change without notice and without revision of this document.

Copyright 2014 Texas Instruments Incorporated

Copyright 2014 Texas Instruments Incorporated

PACKAGING INFORMATION

Orderable part number	Status (1)	Material type (2)	Package | Pins	Package qty | Carrier	RoHS (3)	Lead finish/ Ball material (4)	MSL rating/ Peak reflow (5)	Op temp (°C)	Part marking (6)
TMS320C6678ACYP	Active	Production	FCBGA (CYP) | 841	44 | JEDEC TRAY (5+1)	Yes	Call TI | Snagcu	Level-4-245C-72HR	0 to 85	TMS320C6678CYP @2010 TI
TMS320C6678ACYP.B	Active	Production	FCBGA (CYP) | 841	44 | JEDEC TRAY (5+1)	Yes	SNAGCU	Level-4-245C-72HR	0 to 85	TMS320C6678CYP @2010 TI
TMS320C6678ACYP25	Active	Production	FCBGA (CYP) | 841	44 | JEDEC TRAY (5+1)	Yes	Call TI | Snagcu	Level-4-245C-72HR	0 to 85	TMS320C6678CYP @2010 TI 1.25GHZ
TMS320C6678ACYP25.B	Active	Production	FCBGA (CYP) | 841	44 | JEDEC TRAY (5+1)	Yes	SNAGCU	Level-4-245C-72HR	0 to 85	TMS320C6678CYP @2010 TI 1.25GHZ
TMS320C6678ACYP4	Active	Production	FCBGA (CYP) | 841	44 | JEDEC TRAY (5+1)	Yes	SNAGCU	Level-4-245C-72HR	0 to 85	TMS320C6678CYP @2010 TI 1.4GHZ
TMS320C6678ACYP4.B	Active	Production	FCBGA (CYP) | 841	44 | JEDEC TRAY (5+1)	Yes	SNAGCU	Level-4-245C-72HR	0 to 85	TMS320C6678CYP @2010 TI 1.4GHZ
TMS320C6678ACYPA	Active	Production	FCBGA (CYP) | 841	44 | JEDEC TRAY (5+1)	Yes	Call TI | Snagcu	Level-4-245C-72HR	-40 to 100	TMS320C6678CYP @2010 TI A
TMS320C6678ACYPA.B	Active	Production	FCBGA (CYP) | 841	44 | JEDEC TRAY (5+1)	Yes	SNAGCU	Level-4-245C-72HR	-40 to 100	TMS320C6678CYP @2010 TI A
TMS320C6678ACYPA25	Active	Production	FCBGA (CYP) | 841	44 | JEDEC TRAY (5+1)	Yes	Call TI	Level-4-245C-72HR	-40 to 100	TMS320C6678CYP @2010 TI A1.25GHZ
TMS320C6678ACYPA25.B	Active	Production	FCBGA (CYP) | 841	44 | JEDEC TRAY (5+1)	Yes	Call TI	Level-4-245C-72HR	-40 to 100	TMS320C6678CYP @2010 TI A1.25GHZ
TMS320C6678AGYPA	Active	Production	FCBGA (GYP) | 841	44 | JEDEC TRAY (5+1)	No	SNPB	Level-4-245C-72 HR	-40 to 100	TMS320C6678GYP @2010 TI A
TMS320C6678AXCYP	Active	Production	FCBGA (CYP) | 841	44 | null	Yes	Call TI | Snagcu	Level-4-245C-72HR	0 to 85	TMS320C6678XCYP @2010 TI

Orderable part number	Status (1)	Material type (2)	Package | Pins	Package qty | Carrier	RoHS (3)	Lead finish/ Ball material (4)	MSL rating/ Peak reflow (5)	Op temp (°C)	Part marking (6)
TMS320C6678AXCYP25	Active	Production	FCBGA (CYP) | 841	44 | JEDEC TRAY (5+1)	Yes	Call TI | Snagcu	Level-4-245C-72HR	0 to 85	TMS320C6678XCYP @2010 TI 1.25GHZ
TMS320C6678AXCYPA	Active	Production	FCBGA (CYP) | 841	44 | JEDEC TRAY (5+1)	Yes	Call TI | Snagcu	Level-4-245C-72HR	-40 to 100	TMS320C6678XCYP @2010 TI A

(1) **Status:** For more details on status, see our product life cycle.

(2) **Material type:** When designated, preproduction parts are prototypes/experimental devices, and are not yet approved or released for full production. Testing and final process, including without limitation quality assurance, reliability performance testing, and/or process qualification, may not yet be complete, and this item is subject to further changes or possible discontinuation. If available for ordering, purchases will be subject to an additional waiver at checkout, and are intended for early internal evaluation purposes only. These items are sold without warranties of any kind.

(3) **RoHS values:** Yes, No, RoHS Exempt. See the TI RoHS Statement for additional information and value definition.

(4) **Lead finish/Ball material:** Parts may have multiple material finish options. Finish options are separated by a vertical ruled line. Lead finish/Ball material values may wrap to two lines if the finish value exceeds the maximum column width.

(5) **MSL rating/Peak reflow:** The moisture sensitivity level ratings and peak solder (reflow) temperatures. In the event that a part has multiple moisture sensitivity ratings, only the lowest level per JEDEC standards is shown. Refer to the shipping label for the actual reflow temperature that will be used to mount the part to the printed circuit board.

(6) **Part marking:** There may be an additional marking, which relates to the logo, the lot trace code information, or the environmental category of the part.

Multiple part markings will be inside parentheses. Only one part marking contained in parentheses and separated by a "~" will appear on a part. If a line is indented then it is a continuation of the previous line and the two combined represent the entire part marking for that device.

Important Information and Disclaimer: The information provided on this page represents TI's knowledge and belief as of the date that it is provided. TI bases its knowledge and belief on information provided by third parties, and makes no representation or warranty as to the accuracy of such information. Efforts are underway to better integrate information from third parties. TI has taken and continues to take reasonable steps to provide representative and accurate information but may not have conducted destructive testing or chemical analysis on incoming materials and chemicals. TI and TI suppliers consider certain information to be proprietary, and thus CAS numbers and other limited information may not be available for release.

In no event shall TI's liability arising out of such information exceed the total purchase price of the TI part(s) at issue in this document sold by TI to Customer on an annual basis.

TRAY

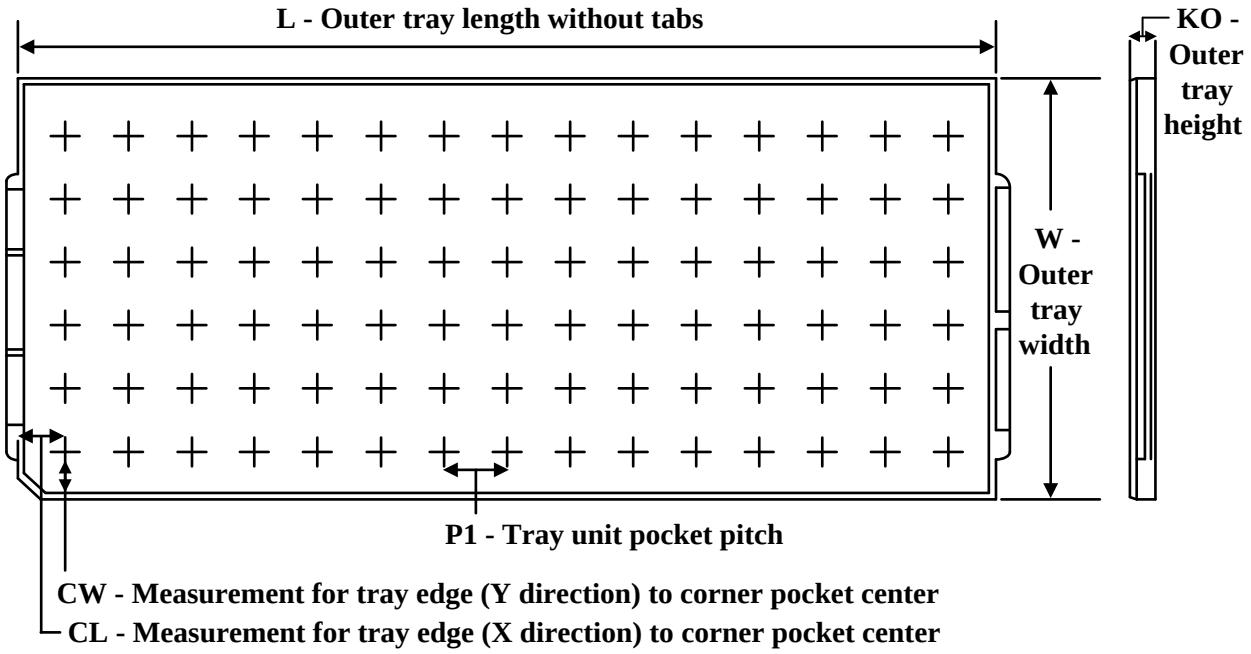

Chamfer on Tray corner indicates Pin 1 orientation of packed units.

*All dimensions are nominal

Device	Package Name	Package Type	Pins	SPQ	Unit array matrix	Max temperature (°C)	L (mm)	W (mm)	K0 (µm)	P1 (mm)	CL (mm)	CW (mm)
TMS320C6678ACYP	CYP	FCBGA	841	44	4 X 11	150	315	135.9	7620	27.5	20	26.7
TMS320C6678ACYP.B	CYP	FCBGA	841	44	4 X 11	150	315	135.9	7620	27.5	20	26.7
TMS320C6678ACYP25	CYP	FCBGA	841	44	4 X 11	150	315	135.9	7620	27.5	20	26.7
TMS320C6678ACYP25.B	CYP	FCBGA	841	44	4 X 11	150	315	135.9	7620	27.5	20	26.7
TMS320C6678ACYP4	CYP	FCBGA	841	44	4 X 11	150	315	135.9	7620	27.5	20	26.7
TMS320C6678ACYP4.B	CYP	FCBGA	841	44	4 X 11	150	315	135.9	7620	27.5	20	26.7
TMS320C6678ACYPA	CYP	FCBGA	841	44	4 X 11	150	315	135.9	7620	27.5	20	26.7
TMS320C6678ACYPA.B	CYP	FCBGA	841	44	4 X 11	150	315	135.9	7620	27.5	20	26.7
TMS320C6678ACYPA25	CYP	FCBGA	841	44	4 X 11	150	315	135.9	7620	27.5	20	26.7
TMS320C6678ACYPA25.B	CYP	FCBGA	841	44	4 X 11	150	315	135.9	7620	27.5	20	26.7
TMS320C6678AXCYP25	CYP	FCBGA	841	44	4 X 11	150	315	135.9	7620	27.5	20	26.7
TMS320C6678AXCYPA	CYP	FCBGA	841	44	4 X 11	150	315	135.9	7620	27.5	20	26.7

CYP (S–PBGA–N841) PLASTIC BALL GRID ARRAY

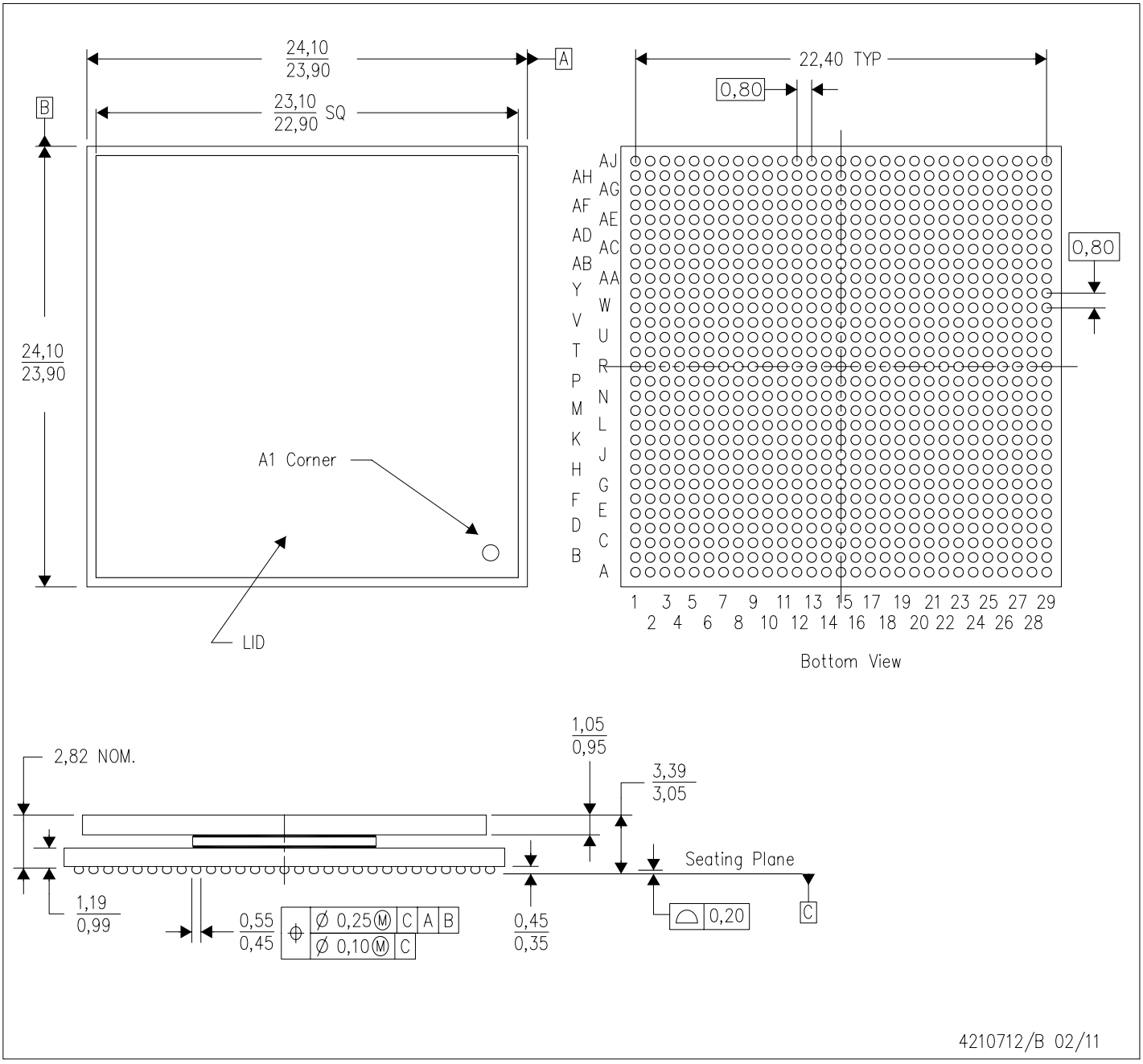

NOTES:
A. All linear dimensions are in millimeters. Dimensioning and tolerancing per ASME Y14.5M–1994.
B. This drawing is subject to change without notice.
C. Thermally enhanced plastic package with lid.
D. Flip chip application only.
E. Pb–free die bump and solder ball.

GYP (S–PBGA–N841) PLASTIC BALL GRID ARRAY

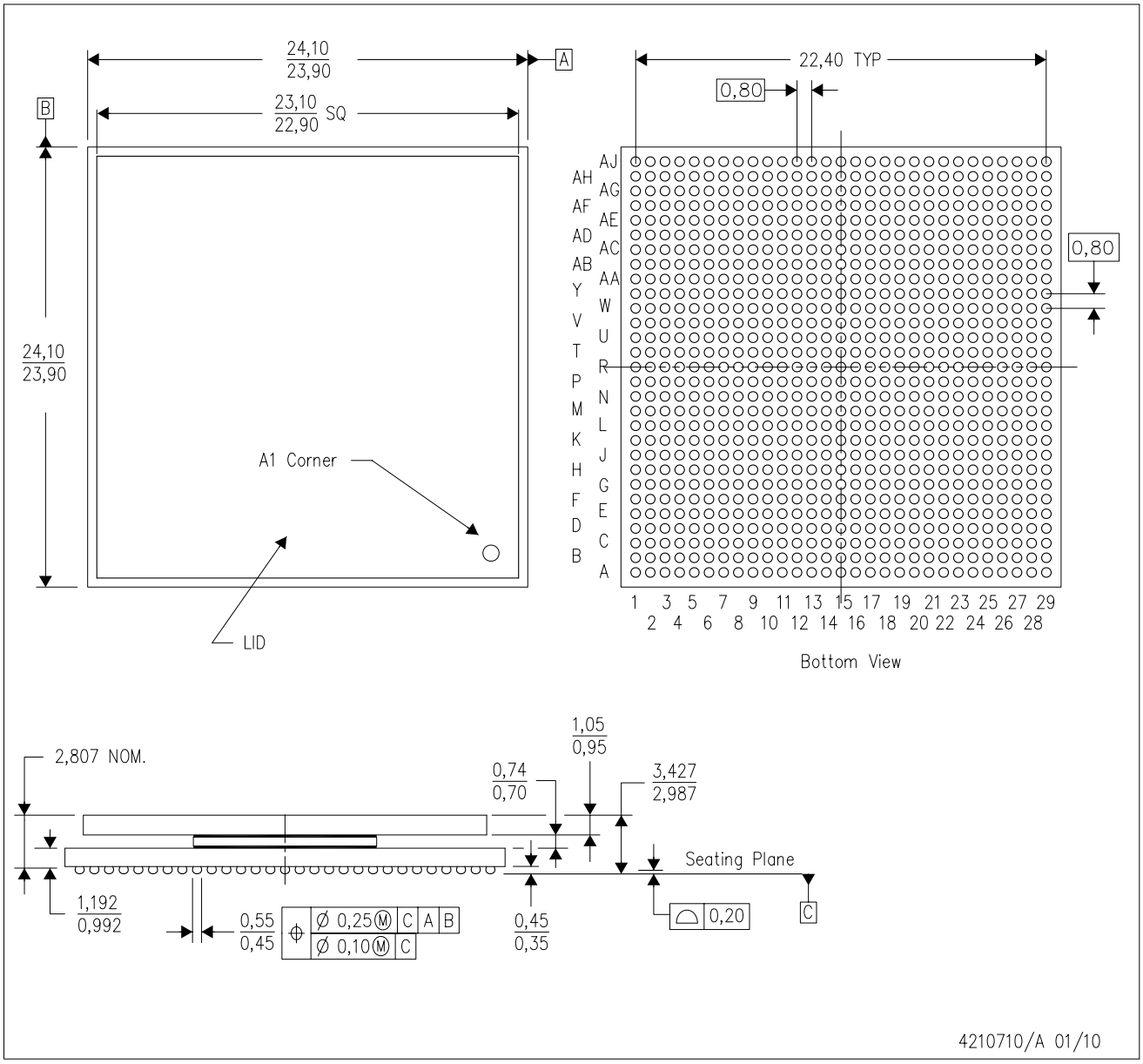

NOTES:
A. All linear dimensions are in millimeters. Dimensioning and tolerancing per ASME Y14.5M–1994.
B. This drawing is subject to change without notice.
C. Thermally enhanced plastic package with lid.
D. Flip chip application only.

IMPORTANT NOTICE AND DISCLAIMER

TI PROVIDES TECHNICAL AND RELIABILITY DATA (INCLUDING DATASHEETS), DESIGN RESOURCES (INCLUDING REFERENCE DESIGNS), APPLICATION OR OTHER DESIGN ADVICE, WEB TOOLS, SAFETY INFORMATION, AND OTHER RESOURCES “AS IS” AND WITH ALL FAULTS, AND DISCLAIMS ALL WARRANTIES, EXPRESS AND IMPLIED, INCLUDING WITHOUT LIMITATION ANY IMPLIED WARRANTIES OF MERCHANTABILITY, FITNESS FOR A PARTICULAR PURPOSE OR NON-INFRINGEMENT OF THIRD PARTY INTELLECTUAL PROPERTY RIGHTS.

These resources are intended for skilled developers designing with TI products. You are solely responsible for (1) selecting the appropriate TI products for your application, (2) designing, validating and testing your application, and (3) ensuring your application meets applicable standards, and any other safety, security, regulatory or other requirements.

These resources are subject to change without notice. TI grants you permission to use these resources only for development of an application that uses the TI products described in the resource. Other reproduction and display of these resources is prohibited. No license is granted to any other TI intellectual property right or to any third party intellectual property right. TI disclaims responsibility for, and you fully indemnify TI and its representatives against any claims, damages, costs, losses, and liabilities arising out of your use of these resources.

TI’s products are provided subject to TI’s Terms of Sale, TI’s General Quality Guidelines, or other applicable terms available either on ti.com or provided in conjunction with such TI products. TI’s provision of these resources does not expand or otherwise alter TI’s applicable warranties or warranty disclaimers for TI products. Unless TI explicitly designates a product as custom or customer-specified, TI products are standard, catalog, general purpose devices.

TI objects to and rejects any additional or different terms you may propose.

Copyright © 2026, Texas Instruments Incorporated

Last updated 10/2025