TMS320DM365
Digital Media System-on-Chip (DMSoC)

Check for Samples: TMS320DM365

1 TMS320DM365 Digital Media System-on-Chip (DMSoC)

1.1 Features

- Highlights
  - High-Performance Digital Media System-on-Chip (DMSoC)
  - Up to 300-MHz ARM926EJ-S Clock Rate
  - Two Video Image Co-processors (HDVICP, MJCP) Engines
  - Supports a Range of Encode, Decode, and Video Quality Operations
  - Video Processing Subsystem
    - HW Face Detect Engine
    - Resize Engine from 1/16x to 8x
    - 16-Bit Parallel AFE (Analog Front-End) Interface Up to 120 MHz
    - 4:2:2 (8-/16-bit) Interface
    - 8-/16-bit YCC and Up to 24-Bit RGB888 Digital Output
    - 3 DACs for HD Analog Video Output
    - Hardware On-Screen Display (OSD)
  - Capable of 720p 30fps H.264 video processing
    Note: 216-MHz is only capable of D1 processing
  - Peripherals include EMAC, USB 2.0 OTG, DDR2/NAND, 5 SPIs, 2 UARTs, 2 MMC/SD/SDIO, Key Scan
  - 8 Different Boot Modes and Configurable Power-Saving Modes
  - Pin-to-pin and software compatible with DM368
  - Extended temperature (-40°C – 85°C) available for 300-MHz device
  - 3.3-V and 1.8-V I/O, 1.2-V/1.35-V Core
  - 338-Pin Ball Grid Array at 65nm Process Technology
- High-Performance Digital Media System-on-Chip (DMSoC)
  - 216-, 270-, 300-MHz ARM926EJ-S Clock Rate
  - Fully Software-Compatible With ARM9™
  - Extended temperature available for 300-MHz device
- ARM926EJ-S™ Core
  - Support for 32-Bit and 16-Bit (Thumb® Mode) Instruction Sets
  - DSP Instruction Extensions and Single Cycle MAC
  - ARM® Jazelle® Technology
  - Embedded ICE-RT Logic for Real-Time Debug
- ARM9 Memory Architecture
  - 16K-Byte Instruction Cache
  - 8K-Byte Data Cache
  - 32K-Byte RAM
  - 16K-Byte ROM
  - Little Endian
- Two Video Image Co-processors (HDVICP, MJCP) Engines
  - Support a Range of Encode and Decode Operations, up to D1 on 216-MHz device and up to 720p on the 270- and 300-MHz parts
  - H.264, MPEG4, MPEG2, MJPEG, JPEG, WMV9/VC1
- Video Processing Subsystem
  - Front End Provides:
    - HW Face Detect Engine
    - Hardware IPIPE for Real-Time Image Processing
      - Resize Engine
        - Resize Images From 1/16x to 8x
        - Separate Horizontal/Vertical Control
        - Two Simultaneous Output Paths
    - IPIPE Interface (IPIPEIF)
    - Image Sensor Interface (ISIF) and CMOS Imager Interface
    - 16-Bit Parallel AFE (Analog Front End) Interface Up to 120 MHz
    - Glueless Interface to Common Video Decoders
    - BT.601/BT.656/BT.1120 Digital YCbCr 4:2:2 (8-/16-Bit) Interface
    - Histogram Module
    - Lens distortion correction module (LDC)

Please be aware that an important notice concerning availability, standard warranty, and use in critical applications of Texas Instruments semiconductor products and disclaimers thereto appears at the end of this data sheet.
All trademarks are the property of their respective owners.

PRODUCTION DATA information is current as of publication date. Products conform to specifications per the terms of the Texas Instruments standard warranty. Production processing does not necessarily include testing of all parameters.

Copyright © 2009–2011, Texas Instruments Incorporated

    - Hardware 3A statistics collection module (H3A)
  - Back End Provides:
    - Hardware On-Screen Display (OSD)
    - Composite NTSC/PAL video encoder output
    - 8-/16-bit YCC and Up to 24-Bit RGB888 Digital Output
    - 3 DACs for HD Analog Video Output
    - LCD Controller
    - BT.601/BT.656 Digital YCbCr 4:2:2 (8-/16-Bit) Interface
- Analog-to-Digital Convertor (ADC)
- Power Management and Real Time Clock Subsystem (PRTCSS)
  - Real Time Clock
- 16-Bit Host-Port Interface (HPI)
- 10/100 Mb/s Ethernet Media Access Controller (EMAC) - Digital Media
  - IEEE 802.3 Compliant
  - Supports Media Independent Interface (MII)
  - Management Data I/O (MDIO) Module
- Key Scan
- Voice Codec
- External Memory Interfaces (EMIFs)
  - DDR2 and mDDR SDRAM 16-bit wide EMIF With 256 MByte Address Space (1.8-V I/O)
  - Asynchronous16-/8-bit Wide EMIF (AEMIF)
    - Flash Memory Interfaces
      - NAND (8-/16-bit Wide Data)
      - 16 MB NOR Flash, SRAM
      - OneNAND(16-bit Wide Data)
- Flash Card Interfaces
  - Two Multimedia Card (MMC) / Secure Digital (SD/SDIO)
  - SmartMedia/xD
- Enhanced Direct-Memory-Access (EDMA) Controller (64 Independent Channels)
- USB Port with Integrated 2.0 High-Speed PHY that Supports
  - USB 2.0 High-Speed Device
  - USB 2.0 High-Speed Host (mini-host, supporting one external device)
  - USB On The Go (HS-USB OTG)
- Four 64-Bit General-Purpose Timers (each configurable as two 32-bit timers)
- One 64-Bit Watch Dog Timer
- Two UARTs (One fast UART with RTS and CTS Flow Control)
- Five Serial Port Interfaces (SPI) each with two Chip-Selects
- One Master/Slave Inter-Integrated Circuit (I^2C) Bus™
- One Multi-Channel Buffered Serial Port (McBSP)
  - I2S
  - AC97 Audio Codec Interface
  - S/PDIF via Software
  - Standard Voice Codec Interface (AIC12)
  - SPI Protocol (Master Mode Only)
  - Direct Interface to T1/E1 Framers
  - Time Division Multiplexed Mode (TDM)
  - 128 Channel Mode
- Four Pulse Width Modulator (PWM) Outputs
- Four RTO (Real Time Out) Outputs
- Up to 104 General-Purpose I/O (GPIO) Pins (Multiplexed with Other Device Functions)
- Boot Modes
  - On-Chip ARM ROM Bootloader (RBL) to Boot From NAND Flash, MMC/SD, UART, USB, SPI, EMAC, or HPI
  - AEMIF (NOR and OneNAND)
- Configurable Power-Saving Modes
- Crystal or External Clock Input (typically 19.2 MHz, 24 MHz, 27 MHz or 36 MHz)
- Flexible PLL Clock Generators
- Debug Interface Support
  - IEEE-1149.1 (JTAG™) Boundary-Scan-Compatible
  - ETB (Embedded Trace Buffer) with 4K-Bytes Trace Buffer memory
  - Device Revision ID Readable by ARM
- 338-Pin Ball Grid Array (BGA) Package (ZCE Suffix), 0.65-mm Ball Pitch
- 65nm Process Technology
- 3.3-V and 1.8-V I/O, 1.2-V/ 1.35-V Internal
- Community Resources
  - TI E2E Community
  - TI Embedded Processors Wiki

Copyright © 2009–2011, Texas Instruments Incorporated

1.2 Description

Developers can now deliver pixel-perfect images at up to 720p H.264 at 30fps in their digital video designs without concerns of video format support, constrained network bandwidth, limited system storage capacity or cost with the new TMS320DM365 digital media processor based on DaVinci technology from Texas Instruments Incorporated (TI). With multi-format HD video, the DM365 also features a suite of peripherals saving developers on system costs.

This ARM9-based DM365 device offers speeds up to 300 MHz and supports production-qualified H.264, MPEG-4, MPEG-2, MJPEG and VC1/WMV9 codecs providing customers with the flexibility to select the right video codec for their application. These codecs are driven from video accelerators offloading compression needs from the ARM core so that developers can utilize the most performance from the ARM for their application. Video surveillance designers achieve greater compression efficiency providing more storage without straining the network bandwidth. Developers of media playback and camera-driven applications, such as video doorbells, digital signage, digital video recorders, portable media players and more can ensure interoperability as well as product scalability by taking advantage of the full suite of codecs supported on the DM365.

Along with multi-format HD video, the DM365 enables seamless interface to most additional external devices required for video applications. The image sensor interface is flexible enough to support CCD, CMOS, and various other interfaces such as BT.656, BT1120. The DM365 also offers a high level of integration with HD display support including, 3 built-in 10-bit HD Analog Video Digital to Analog Converters (DACs), DDR2/mDDR, Ethernet MAC, USB 2.0, integrated audio, Host Port Interface (HPI), Analog to Digital Converter, and many more features saving developers on overall system costs as well as real estate on their circuit boards allowing for a slimmer, sleeker design.

Copyright © 2009–2011, Texas Instruments Incorporated

1.3 Functional Block Diagram

Figure 1-1 shows the functional block diagram of the TMS320DM365 device.

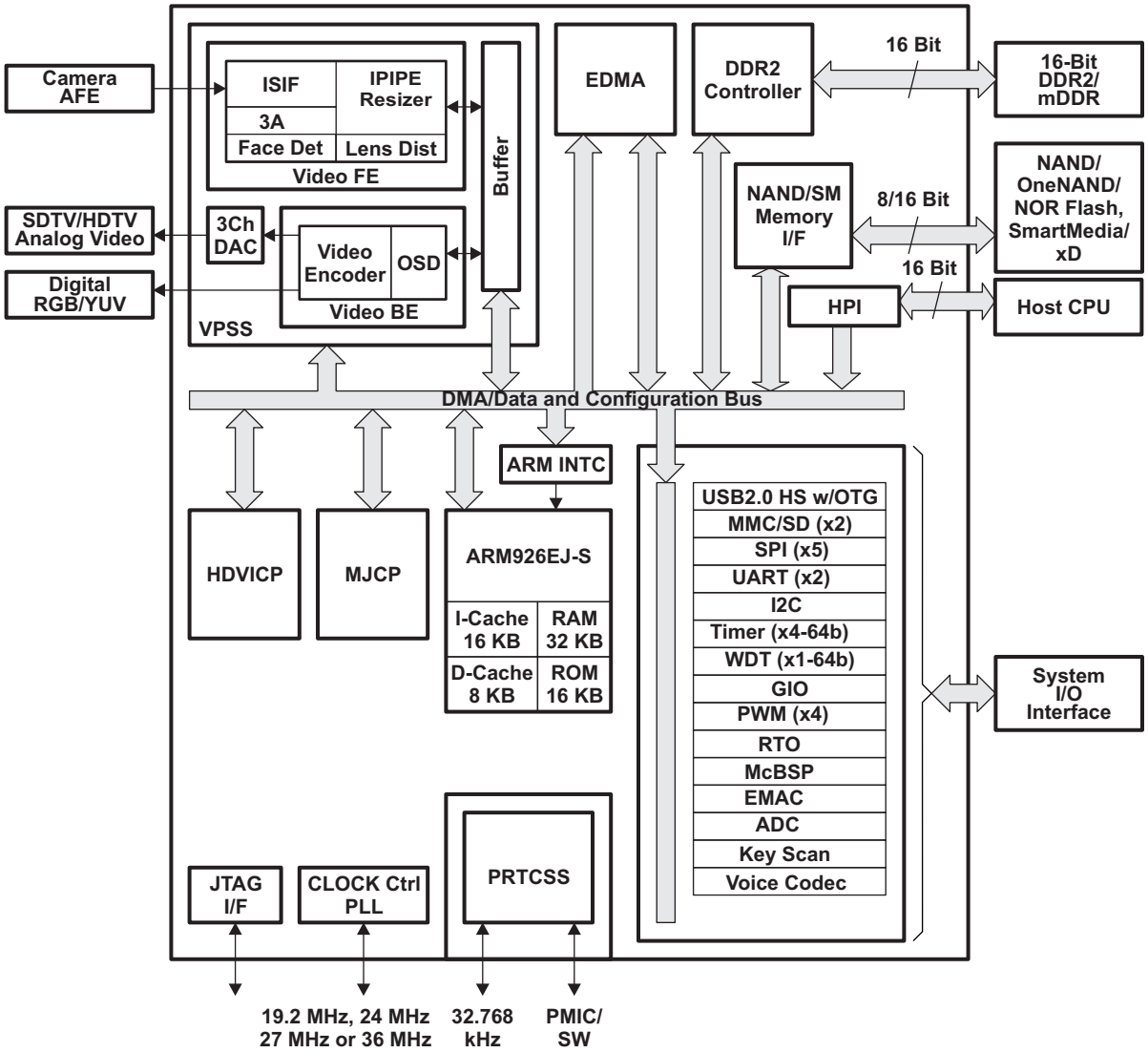

Figure 1-1. Functional Block Diagram

Copyright © 2009–2011, Texas Instruments Incorporated

1 TMS320DM365 Digital Media System-on-Chip (DMSoC) 1
1.1 Features 1
1.2 Description 3
1.3 Functional Block Diagram 4
Revision History (Revision E) 6
2 Device Overview 7
2.1 Device Characteristics 7
2.2 Device Compatibility 8
2.3 ARM Subsystem Overview 8
2.4 System Control Module 12
2.5 Power Management 13
2.6 Memory Map Summary 14
2.7 Pin Assignments 16
2.8 Terminal Functions 21
2.9 Device Support 46
3 Device Configurations 50
3.1 System Module Registers 50
3.2 Boot Modes 51
3.3 Device Clocking 54
3.4 Power and Sleep Controller (PSC) 62
3.5 Pin Multiplexing 63
3.6 Device Reset 64
3.7 Default Device Configurations 64
3.8 Debugging Considerations 69
4 System Interconnect 70
5 Device Operating Conditions 71
5.1 Absolute Maximum Ratings Over Operating Case Temperature Range (Unless Otherwise Noted) 71
5.2 Recommended Operating Conditions 72
5.3 Electrical Characteristics Over Recommended Ranges of Supply Voltage and Operating Case Temperature (Unless Otherwise Noted) 74
6 Peripheral Information and Electrical Specifications 76
6.1 Parameter Information Device-Specific Information 76
6.2 Recommended Clock and Control Signal Transition Behavior 77
6.3 Power Supplies 77
6.4 Power-Supply Sequencing 78
6.5 Reset 80
6.6 Oscillators and Clocks 81
6.7 Power Management and Real Time Clock Subsystem (PRTCSS) 85
6.8 General-Purpose Input/Output (GPIO) 87
6.9 EDMA Controller 89
6.10 External Memory Interface (EMIF) 99
6.11 MMC/SD 120
6.12 Video Processing Subsystem (VPSS) Overview 123
6.13 USB 2.0 149
6.14 Universal Asynchronous Receiver/Transmitter (UART) 157
6.15 Serial Port Interface (SPI) 159
6.16 Inter-Integrated Circuit (I2C) 169
6.17 Multi-Channel Buffered Serial Port (McBSP) 172
6.18 Timer 181
6.19 Pulse Width Modulator (PWM) 183
6.20 Real Time Out (RTO) 185
6.21 Ethernet Media Access Controller (EMAC) 187
6.22 Management Data Input/Output (MDIO) 193
6.23 Host-Port Interface (HPI) Peripheral 195
6.24 Key Scan 199
6.25 Analog-to-Digital Converter (ADC) 201
6.26 Voice Codec 201
6.27 IEEE 1149.1 JTAG 203
7 Mechanical Data 206
7.1 Thermal Data for ZCE 206
7.2 Packaging Information 206

Copyright © 2009–2011, Texas Instruments Incorporated

Revision History

NOTE: Page numbers for previous revisions may differ from page numbers in the current version.

highlights the technical changes made to the SPRS457D device-specific data sheet to make it an SPRS457**E** revision.

Revision E Updates

See	Additions/Changes/Deletions
Global	Removed sentence stating "micro-vias are not required."
Figure 2-2	Corrected J5 pin name.
Table 2-5	Changed TYPE of VREF pin from A I/O to A I.
Table 2-5	Changed TYPE of VCOM pin from AI to AO.
Section 3.2.1	Added 24 MHz reference clock to ARM ROM Boot - UART mode.
Table 6-21	Updated first table note.
Table 6-22	Updated second table note.
Table 6-26	Updated table and added table note.

Copyright © 2009–2011, Texas Instruments Incorporated

2 Device Overview

2.1 Device Characteristics

Table 2-1 provides an overview of the DMSoC. The table shows significant features of the device, including the peripherals, capacity of on-chip RAM, ARM operating frequency, the package type with pin count, etc.

Table 2-1. Characteristics of the Processor

HARDWARE FEATURES		DEVICE
Peripherals Not all peripherals pins are available at the same time (For more detail, see the Device Configuration section).	DDR2 / mDDR Memory Controller	DDR2 / mDDR (16-bit bus width)
	Asynchronous EMIF (AEMIF)	Asynchronous (8/16-bit bus width) RAM, Flash (NOR, NAND, OneNAND)
	Flash Card Interfaces	Two MMC/SD One SmartMedia/xD
	EDMA	64 independent DMA channels Eight QDMA channels
	Timers	Four 64-Bit General Purpose (each configurable as two separate 32-bit timers) One 64-Bit Watch Dog
	UART	Two (one with RTS and CTS flow control)
	SPI	Five (each supports two slave devices)
	I^2C	One (Master/Slave)
	10/100 Ethernet MAC with Management Data I/O	One
	Multi-Channel Buffered Serial Port [McBSP]	One McBSP
	Power Management and Real Time Clock Subsystem (PRTCSS)	RTC (32.768kHz), GPIO
	Key Scan	4 x 4 Matrix, 5 x 3 Matrix
	Voice Codec	One
	Analog-to-Digital Converter (ADC)	6-channel, 10-bit Interface
	General-Purpose Input/Output Port	Up to 104
	Pulse width modulator (PWM)	Four outputs
	Configurable Video Ports	One Input (VPFE) One Output (VPBE)
	USB 2.0	High Speed Device High Speed Host On The Go (HS-USB-OTG)
	Wireless Interfaces	Through SDIO
	RTO	Four Channels
On-Chip CPU Memory	Organization	ARM 16-KB I-cache, 8-KB D-cache, 32-KB RAM, 16-KB ROM
JTAG BSDL_ID	JTAGID register (address location: 0x01C4 0028)	See Section 6.27.1, JTAG Register Description(s)
CPU Frequency (Maximum)	MHz	ARM: 216-MHz, 270-MHz, 300-MHz
Voltage	Core (V)	1.2 V or 1.35 V
	I/O (V)	3.3 V, 1.8 V
PLL Options	Reference frequency options Configurable PLL controller	19.2 MHz, 24 MHz, 27 MHz, 36 MHz PLL bypass, programmable PLL
BGA Package	13 x 13 mm	338-Pin BGA (ZCE)
Process Technology		65 nm

Copyright © 2009–2011, Texas Instruments Incorporated

Table 2-1. Characteristics of the Processor (continued)

HARDWARE FEATURES		DEVICE
Product Status(1)	Product Preview (PP), Advance Information (AI), or Production Data (PD)	PD

(1) PRODUCTION DATA information is current as of publication date. Products conform to specifications per the terms of Texas Instruments standard warranty. Production processing does not necessarily include testing of all parameters.

2.2 Device Compatibility

The ARM926EJ-S RISC CPU is compatible with other ARM9 CPUs from ARM Holdings plc.

2.3 ARM Subsystem Overview

The ARM Subsystem contains components required to provide the ARM926EJ-S (ARM) master control of the overall device system, including the components of the ARM Subsystem, the peripherals, and the external memories.

The ARM is responsible for handling system functions such as system-level initialization, configuration, user interface, user command execution, connectivity functions, interface and control of the subsystem, etc. The ARM is master and performs these functions because it has a large program memory space and fast context switching capability, and is thus suitable for complex, multi-tasking, and general-purpose control tasks.

2.3.1 Components of the ARM Subsystem

The ARM Subsystem consists of the following components:

- ARM926EJ-S RISC processor, including:
  - coprocessor 15 (CP15)
  - MMU
  - 16KB Instruction cache
  - 8KB Data cache
  - Write Buffer
  - Java accelerator
- ARM Internal Memories
  - 32KB Internal RAM (32-bit wide access)
  - 16KB Internal ROM (ARM bootloader for non-AEMIF boot modes)
- Embedded Trace Module and Embedded Trace Buffer (ETM/ETB)
- System Control Peripherals
  - ARM Interrupt Controller
  - PLL Controller
  - Power and Sleep Controller
  - System Control Module

The ARM also manages/controls all the device peripherals.

Figure 2-1 shows the functional block diagram of the ARM Subsystem.

 Copyright © 2009–2011, Texas Instruments Incorporated

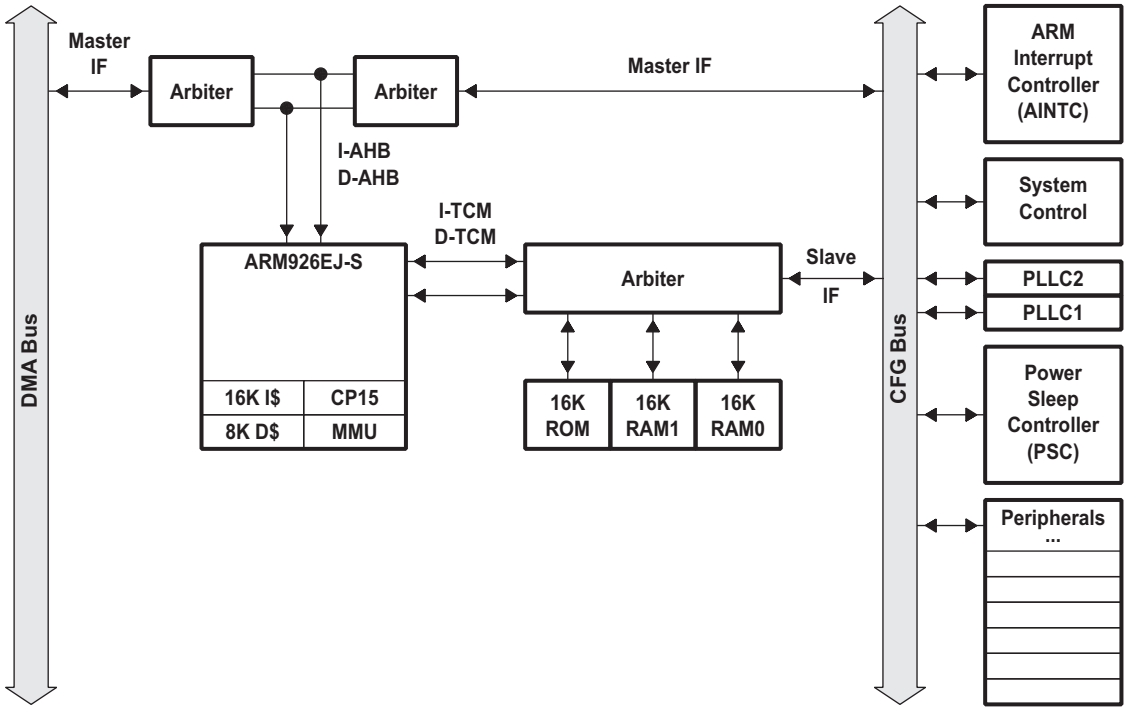

Figure 2-1. ARM Subsystem Block Diagram

2.3.2 ARM926EJ-S RISC CPU

The ARM Subsystem integrates the ARM926EJ-S processor. The ARM926EJ-S processor is a member of ARM9 family of general-purpose microprocessors. This processor is targeted at multi-tasking applications where full memory management, high performance, low die size, and low power are all important. The ARM926EJ-S processor supports the 32-bit ARM and 16 bit THUMB instruction sets, enabling the user to trade off between high performance and high code density. Specifically, the ARM926EJ-S processor supports the ARMv5TEJ instruction set, which includes features for efficient execution of Java byte codes, providing Java performance similar to Just in Time (JIT) Java interpreter, but without associated code overhead.

The ARM926EJ-S processor supports the ARM debug architecture and includes logic to assist in both hardware and software debug. The ARM926EJ-S processor has a Harvard architecture and provides a complete high performance subsystem, including:

- ARM926EJ -S integer core
- CP15 system control coprocessor
- Memory Management Unit (MMU)
- Separate instruction and data Caches
- Write buffer
- Separate instruction and data Tightly-Coupled Memories (TCMs) [internal RAM] interfaces
- Separate instruction and data AHB bus interfaces
- Embedded Trace Module and Embedded Trace Buffer (ETM/ETB)

For more complete details on the ARM9, refer to the ARM926EJ-S Technical Reference Manual, available at http://www.arm.com

Copyright © 2009–2011, Texas Instruments Incorporated

2.3.3 CP15

The ARM926EJ-S system control coprocessor (CP15) is used to configure and control instruction and data caches, Tightly-Coupled Memories (TCMs), Memory Management Unit (MMU), and other ARM subsystem functions. The CP15 registers are programmed using the MRC and MCR ARM instructions, when the ARM in a privileged mode such as supervisor or system mode.

2.3.4 MMU

The ARM926EJ-S MMU provides virtual memory features required by operating systems such as Linux, WindowCE, ultron, ThreadX, etc. A single set of two level page tables stored in main memory is used to control the address translation, permission checks and memory region attributes for both data and instruction accesses. The MMU uses a single unified Translation Lookaside Buffer (TLB) to cache the information held in the page tables. The MMU features are:

- Standard ARM architecture v4 and v5 MMU mapping sizes, domains and access protection scheme.
- Mapping sizes are:
  - 1MB (sections)
  - 64KB (large pages)
  - 4KB (small pages)
  - 1KB (tiny pages)
- Access permissions for large pages and small pages can be specified separately for each quarter of the page (subpage permissions)
- Hardware page table walks
- Invalidate entire TLB, using CP15 register 8
- Invalidate TLB entry, selected by MVA, using CP15 register 8
- Lockdown of TLB entries, using CP15 register 10

2.3.5 Caches and Write Buffer

The size of the Instruction Cache is 16KB, Data cache is 8KB. Additionally, the Caches have the following features:

- Virtual index, virtual tag, and addressed using the Modified Virtual Address (MVA)
- Four-way set associative, with a cache line length of eight words per line (32-bytes per line) and with two dirty bits in the Dcache
- Dcache supports write-through and write-back (or copy back) cache operation, selected by memory region using the C and B bits in the MMU translation tables.
- Critical-word first cache refilling
- Cache lockdown registers enable control over which cache ways are used for allocation on a line fill, providing a mechanism for both lockdown, and controlling cache corruption
- Dcache stores the Physical Address TAG (PA TAG) corresponding to each Dcache entry in the TAG RAM for use during the cache line write-backs, in addition to the Virtual Address TAG stored in the TAG RAM. This means that the MMU is not involved in Dcache write-back operations, removing the possibility of TLB misses related to the write-back address.
- Cache maintenance operations provide efficient invalidation of, the entire Dcache or Icache, regions of the Dcache or Icache, and regions of virtual memory.

The write buffer is used for all writes to a noncachable bufferable region, write-through region and write misses to a write-back region. A separate buffer is incorporated in the Dcache for holding write-back for cache line evictions or cleaning of dirty cache lines. The main write buffer has 16-word data buffer and a four-address buffer. The Dcache write-back has eight data word entries and a single address entry.

2.3.6 Tightly Coupled Memory (TCM)

ARM internal RAM is provided for storing real-time and performance-critical code/data and the Interrupt

 Copyright © 2009–2011, Texas Instruments Incorporated

Vector table. ARM internal ROM boot modes include NAND, MMC/SD, UART, USB, SPI, EMAC, and HPI. The RAM and ROM memories interfaced to the ARM926EJ-S via the tightly coupled memory interface that provides for separate instruction and data bus connections. Since the ARM TCM does not allow instructions on the D-TCM bus or data on the I-TCM bus, an arbiter is included so that both data and instructions can be stored in the internal RAM/ROM. The arbiter also allows accesses to the RAM/ROM from extra-ARM sources (e.g., EDMA or other masters). The ARM926EJ-S has built-in DMA support for direct accesses to the ARM internal memory from a non-ARM master. Because of the time-critical nature of the TCM link to the ARM internal memory, all accesses from non-ARM devices are treated as DMA transfers.

Instruction and Data accesses are differentiated via accessing different memory map regions, with the instruction region from 0x0000 through 0x7FFF and data from 0x10000 through 0x17FFF. Placing the instruction region at 0x0000 is necessary to allow the ARM Interrupt Vector table to be placed at 0x0000, as required by the ARM architecture. The internal 32-KB RAM is split into two physical banks of 16KB each, which allows simultaneous instruction and data accesses to be accomplished if the code and data are in separate banks.

2.3.7 Advanced High-performance Bus (AHB)

The ARM Subsystem uses the AHB port of the ARM926EJ-S to connect the ARM to the configuration bus and the external memories. Arbiters are employed to arbitrate access to the separate D-AHB and I-AHB by the configuration bus and the external memories bus.

2.3.8 Embedded Trace Macrocell (ETM) and Embedded Trace Buffer (ETB)

To support real-time trace, the ARM926EJ-S processor provides an interface to enable connection of an Embedded Trace Macrocell (ETM). The ARM926ES-J Subsystem also includes the Embedded Trace Buffer (ETB). The ETM consists of two parts:

- Trace Port provides real-time trace capability for the ARM9.
- Triggering facilities provide trigger resources, which include address and data comparators, counter, and sequencers.

The device trace port is not pinned out and is instead only connected to the Embedded Trace Buffer. The ETB has a 4KB buffer memory. ETB enabled debug tools are required to read/interpret the captured trace data.

2.3.9 ARM Memory Mapping

The ARM memory map is shown in Table 2-3 and Table 2-4. This section describes the memories and interfaces within the ARM's memory map.

2.3.9.1 ARM Internal Memories

The ARM has access to the following ARM internal memories:

- 32KB ARM Internal RAM on TCM interface, logically separated into two 16KB pages to allow simultaneous access on any given cycle if there are separate accesses for code (I-TCM bus) and data (D-TCM) to the different memory regions.
- 16KB ARM Internal ROM

2.3.9.2 External Memories

The ARM has access to the following External memories:

- DDR2 / mDDR Synchronous DRAM
- Asynchronous EMIF / OneNAND / NOR
- NAND Flash

Copyright © 2009–2011, Texas Instruments Incorporated

- Flash card devices:
  - MMC/SD
  - xD
  - SmartMedia

2.3.10 Peripherals

The ARM has access to all of the peripherals on the device.

2.3.11 ARM Interrupt Controller (AINTC)

The device ARM Interrupt Controller (AINTC) has the following features:

- Supports up to 64 interrupt channels (16 external channels)
- Interrupt mask for each channel
- Each interrupt channel can be mapped to a Fast Interrupt Request (FIQ) or to an Interrupt Request (IRQ) type of interrupt.
- Hardware prioritization of simultaneous interrupts
- Configurable interrupt priority (2 levels of FIQ and 6 levels of IRQ)
- Configurable interrupt entry table (FIQ and IRQ priority table entry) to reduce interrupt processing time

The ARM core supports two interrupt types: FIQ and IRQ. See the ARM926EJ-S Technical Reference Manual for detailed information about the ARM's FIQ and IRQ interrupts. Each interrupt channel is mappable to an FIQ or to an IRQ type of interrupt, and each channel can be enabled or disabled. The INTC supports user-configurable interrupt-priority and interrupt entry addresses. Entry addresses minimize the time spent jumping to interrupt service routines (ISRs). When an interrupt occurs, the corresponding highest priority ISR's address is stored in the INTC's ENTRY register. The IRQ or FIQ interrupt routine can read the ENTRY register and jump to the corresponding ISR directly. Thus, the ARM does not require a software dispatcher to determine the asserted interrupt.

2.4 System Control Module

The system control module is a system-level module containing status and top-level control logic required by the device. The system control module consists of a miscellaneous set of status and control registers, accessible by the ARM and supporting all of the following system features and operations:

- Device identification
- Device configuration
  - Pin multiplexing control
  - Device boot configuration status
- ARM interrupt and EDMA event multiplexing control
- Special peripheral status and control
  - Timer64
  - USB PHY control
  - VPSS clock and video DAC control and status
  - DDR VTP control
  - Clockout circuitry
  - GIO de-bounce control
- Power management
  - Deep sleep
- Bandwidth Management
  - Bus master DMA priority control

For more information on the System Control Module refer to Section 3, *Device Configurations* and the *TMS320DM36x DMSoC ARM Subsystem* Reference Guide (literature number SPRUFG5).

 Copyright © 2009–2011, Texas Instruments Incorporated

2.5 Power Management

The device is designed for minimal power consumption. There are two components to power consumption: active power and leakage power. Active power is the power consumed to perform work and scales with clock frequency and the amount of computations being performed. Active power can be reduced by controlling the clocks in such a way as to either operate at a clock setting just high enough to complete the required operation in the required time-line or to run at a clock setting until the work is complete and then drastically cut the clocks (e.g. to PLL Bypass mode) until additional work must be performed. Leakage power is due to static current leakage and occurs regardless of the clock rate. Leakage, or standby power, is unavoidable while power is applied and scales roughly with the operating junction temperatures. Leakage power can only be avoided by removing power completely from a device or subsystem. The device includes several power management modes which are briefly described in Table 2-2. See the *TMS320DM36x DMSoC ARM Subsystem* Reference Guide (literature number SPRUFG5) for more information on power management.

Table 2-2. Power Management Conditions

POWER MGMT. APPLICATION SCENARIO	PRTCSS	CORE POWER	OSC. POWER	PLL CNTRLR.	ARM926 CLOCK	GIO, UART, I2C CLOCKS	SPI, PWM, TIMER CLOCKS	OTHER PERIPH. CLOCKS	DDR CLOCK/ MODE	DESCRIPTION
PRTCSS	Active	Off	Off	Off	Off	Off	Off	Off	Off	This condition consumes the lowest possible power, except for the PRTCSS.
Deep Sleep Mode (1)	Active	On	Off	Bypass Mode (not Active)	Off	Off	Off	Off	Suspend / "Self-Refresh"	This mode consumes the second lowest possible power, except for PRTCSS and core power, where only the deep sleep circuit is on in this mode.
Standby	Active	On	On	Bypass Mode	Off	On	Off	Off	Suspend / "Self-Refresh"	This condition keeps the minimum possible modules powered-on in order to wake up the device. Clocks are suspended except for GIO (interrupts), UART, and I2C (in slave mode).
Low-power (PLL Bypass Mode)	Active	On	On	Bypass Mode	On	On / Off	On / Off	On / Off	Suspend / "Self-Refresh"	Most clocks are suspended, except for ARM, GIO, UART, SPI, I2C, PWM, and timers. Since ARM will not have access to DDR, its internal Cache will be either frozen or not accessed.
System Running (PLL Mode)	Active	On	On	PLL Mode	On	On / Off	On / Off	On / Off	Nominal Clock / Operation	The device, including system PLLs, are on. This condition conserves the least amount of power.

(1) For more details, see *TMS320DM36x DMSoC ARM Subsystem* Reference Guide (literature number SPRUFG5)

2.6 Memory Map Summary

Table 2-3 shows the memory map address ranges of the device. Table 2-4 depicts the expanded map of the Configuration Space (0x01C0 0000 through 0x01FF FFFF). The device has multiple on-chip memories associated with its processor and various subsystems. To help simplify software development a unified memory map is used where possible to maintain a consistent view of device resources across all bus masters. The bus masters are the ARM, EDMA, EMAC, USB, HPI, MJCP, HDVICP and VPSS. The Master Peripherals are EMAC, USB, and HPI. Please refer to Section 4 for more details.

Table 2-3. Memory Map

Start Address	End Address	Size (Bytes)	ARM Mem Map	EDMA Mem Map	Master Periph Mem Map	VPSS Mem Map
0x0000 0000	0x0000 3FFF	16K	ARM RAM0 (Instruction)	Reserved	Reserved	Reserved
0x0000 4000	0x0000 7FFF	16K	ARM RAM1 (Instruction)			
0x0000 8000	0x0000 BFFF	16K	ARM ROM (Instruction)			
0x0000 C000	0x0000 FFFF	16K	Reserved			
0x0001 0000	0x0001 3FFF	16K	ARM RAM0 (Data)	ARM RAM0	ARM RAM0	
0x0001 4000	0x0001 7FFF	16K	ARM RAM1 (Data)	ARM RAM1	ARM RAM1	
0x0001 8000	0x0001 BFFF	16K	ARM ROM	ARM ROM	ARM ROM	
0x0001 C000	0x000F FFFF	912K	Reserved	Reserved		
0x0010 0000	0x01BB FFFF	26M				
0x01BC 0000	0x01BC 0FFF	4K	ARM ETB Mem			
0x01BC 1000	0x01BC 17FF	2K	ARM ETB Reg			
0x01BC 1800	0x01BC 18FF	256	ARM IceCrusher			
0x01BC 1900	0x01BC FFFF	59136	Reserved			
0x01BD 0000	0x01BF FFFF	192K				
0x01C0 0000	0x01FF FFFF	4M	CFG Bus Peripherals	CFG Bus Peripherals	CFG Bus Peripherals	
0x0200 0000	0x09FF FFFF	128M	ASYNC EMIF (Data)	ASYNC EMIF (Data)	Reserved	
0x0A00 0000	0x11EF FFFF	127M - 16K	Reserved	Reserved		
0x11F0 0000	0x11F1 FFFF	128K	MJCP DMA Port	MJCP DMA Port		
0x11F2 0000	0x11FF FFFF	896K	Reserved	Reserved		
0x1200 0000	0x1207 FFFF	512K	HDVICP DMA Port1	HDVICP DMA Port1		HDVICP DMA Port1
0x1208 0000	0x120F FFFF	512K	Reserved	HDVICP DMA Port2		
0x1210 0000	0x1217 FFFF	512K		HDVICP DMA Port3		
0x1218 0000	0x1FFF FFFF	222.5M		Reserved		
0x2000 0000	0x2000 7FFF	32K	DDR EMIF Control Regs	DDR EMIF Control Regs		
0x2000 8000	0x41FF FFFF	544M-32K	Reserved	Reserved		
0x4200 0000	0x49FF FFFF	128M				
0x4A00 0000	0x7FFF FFFF	864M				
0x8000 0000	0x8FFF FFFF	256M	DDR EMIF	DDR EMIF	DDR EMIF	DDR EMIF
0x9000 0000	0xFFFF FFFF	1792M	Reserved	Reserved	Reserved	Reserved

Copyright © 2009–2011, Texas Instruments Incorporated

Table 2-4. ARM Configuration Bus Access to Peripherals

	Address		
Region	**Start**	**End**	**Size**
EDMA CC	0x01C0 0000	0x01C0 FFFF	64K
EDMA TC0	0x01C1 0000	0x01C1 03FF	1K
EDMA TC1	0x01C1 0400	0x01C1 07FF	1K
EDMA TC2	0x01C1 0800	0x01C1 0BFF	1K
EDMA TC3	0x01C1 0C00	0x01C1 0FFF	1K
Reserved	0x01C1 1000	0x01C1 FFFF	60 K
UART0	0x01C2 0000	0x01C2 03FF	1K
Reserved	0x01C2 0400	0x01 20 7FFF	1K
Timer 3	0x01C2 0800	0x01C2 0BFF	1K
Real-time out	0x01C2 0C00	0x01C2 0FFF	1K
I2C	0x01C2 1000	0x01C2 13FF	1K
Timer 0	0x01C2 1400	0x01C2 17FF	1K
Timer 1	0x01C2 1800	0x01C2 1BFF	1K
Timer 2	0x01C2 1C00	0x01C2 1FFF	1K
PWM0	0x01C2 2000	0x01C2 23FF	1K
PWM1	0x01C2 2400	0x01C2 27FF	1K
PWM2	0x01C2 2800	0x01C2 2BFF	1K
PWM3	0x01C2 2C00	0x01C2 2FFF	1K
SPI4	0x01C2 3000	0x01C2 37FF	2K
Timer 4	0x01C2 3800	0x01C2 3BFF	1K
ADCIF	0x01C2 3C00	0x01C2 3FFF	1K
Reserved	0x01C2 4000	0x01C3 4FFF	112K
System Module	0x01C4 0000	0x01C4 07FF	2K
PLL Controller 1	0x01C4 0800	0x01C4 0BFF	1K
PLL Controller 2	0x01C4 0C00	0x01C4 0FFF	1K
Power/Sleep Controller	0x01C4 1000	0x01C4 1FFF	4K
Reserved	0x01C4 2000	0x01C4 7FFF	24K
ARM Interrupt Controller	0x01C4 8000	0x01C4 83FF	1K
Reserved	0x01 C4 8400	0x01C63FFF	111K
USB OTG 2.0 Regs / RAM	0x01C6 4000	0x01C6 5FFF	8K
SPI0	0x01C6 6000	0x01C6 67FF	2K
SPI1	0x01C6 6800	0x01C6 6FFF	2K
GPIO	0x01C6 7000	0x01C6 77FF	2K
SPI2	0x01C6 7800	0x01C6 FFFF	2K
SPI3	0x01C6 8000	0x01C6 87FF	2K
Reserved	0x01C6 8800	0x01C6 87FF	2K
PRTCSS Interface Registers	0x01C6 9000	0x01C6 93FF	1K
KEYSCAN	0x01C6 9400	0x01C6 97FF	1K
HPI	0x01C6 9800	0x01C6 9FFF	2K
Reserved	0x01C6 A000	0x01C6 FFFF	24K
VPSS Subsystem			
ISP System Configuration Registers	0x01C7 0000	0x01C7 00FF	256
VPBE Clock Control Register	0x01C7 0200	0x01C7 02FF	256
Resizer Registers	0x01C7 0400	0x01C7 07FF	1K
IPIPE Registers	0x01C7 0800	0x01C7 0FFF	2K
ISIF Registers	0x01C7 1000	0x01C7 11FF	512

Copyright © 2009–2011, Texas Instruments Incorporated

Table 2-4. ARM Configuration Bus Access to Peripherals (continued)

	Address		
IPIPEIF Registers	0x01C7 1200	0x01C7 12FF	768
H3A Registers	0x01C7 1400	0x01C7 14FF	256
Reserved	0x01C7 1600	0x01C7 17FF	512
FDIF Registers	0x01C7 1800	0x01C7 1BFF	1K
OSD Registers	0x01C7 1C00	0x01C7 1CFF	256
Reserved	0x01C7 1D00	0x01C7 1DFF	256
VENC Registers	0x01C7 1E00	0x01C7 1FFF	512
Reserved	0x01C7 2000	0x01CF FFFF	568K
Multimedia / SD 1	0x01D0 0000	0x01D0 1FFF	8K
McBSP	0x01D0 2000	0x01D0 3FFF	8K
Reserved	0x01D0 4000	0x01D0 5FFF	8K
UART1	0x01D0 6000	0x01D0 63FF	1K
Reserved	0x01D0 6400	0x01D0 7FFF	3K
EMAC Control Registers	0x01D0 7000	0x01D0 9FFF	0x01D0 7FFF 8K
EMAC Control Module RAM	0x01D0 8000		8K
EMAC Control Module Registers	0x01D0 A000	0x01D0 AFFF	4K
EMAC MDIO Control Registers	0x01D0 B000	0x01D0 B7FF	2K
Voice Codec	0x01D0 C000	0x01D0 C3FF	1K
Reserved	0x01D0 C400	0x01D0 FFFF	17K
ASYNC EMIF Control	0x01D1 0000	0x01D1 0FFF	4K
Multimedia / SD 0	0x01D1 1000	0x01D1 FFFF	60K
Reserved	0x01D2 0000	0x01D3 FFFF	128K
Reserved	0x01D4 0000	0x01DF FFFF	768K
Reserved	0x01E0 0000	0x01FF FFFF	2M
ASYNC EMIF Data (CE0)	0x0200 0000	0x03FF FFFF	32M
ASYNC EMIF Data (CE1)	0x0400 0000	0x05FF FFFF	32M
Reserved	0x0600 0000	0x09FF FFFF	64M
Reserved	0x0A00 0000	0x0FFF FFFF	96M

2.7 Pin Assignments

Extensive use of pin multiplexing is used to accommodate the largest number of peripheral functions in the smallest possible package. Pin multiplexing is controlled using a combination of hardware configuration at device reset and software programmable register settings.

2.7.1 Pin Map (Bottom View)

Figure 2-2 through Figure 2-5 show the pin assignments in four quadrants (A, B, C, and D).

Copyright © 2009–2011, Texas Instruments Incorporated

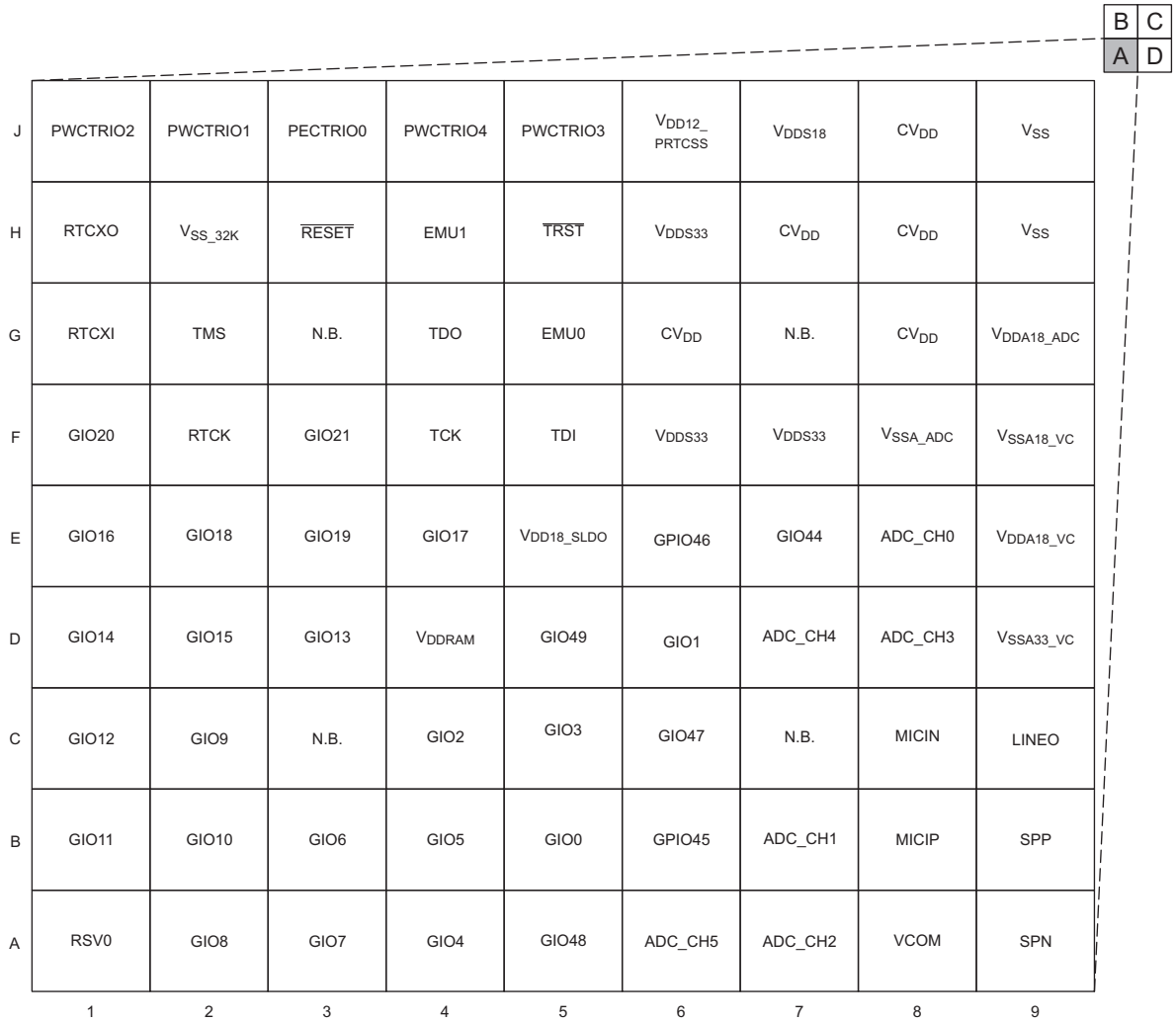

(1) N.B stands for No-Ball.

Figure 2-2. ZCE Pin Map [Quadrant A]

	1	2	3	4	5	6	7	8	9
W	V_{SS}	GIO32	GIO35	GIO36	GIO41	DDR_ DQM1	DDR_ DQ12	DDR_ DQ8	DDR_ DQ6
V	GIO28	GIO23	GIO33	GIO34	GIO38	DDR_ DQ15	DDR_ DQ14	DDR_ DQ11	DDR_ DQ5
U	GIO26	GIO29	N.B.	GIO31	GIO40	DDR_ DQSN1	N.B.	DDR_DQ9	DDR_ DQSN0
T	GIO25	GIO27	GIO24	GIO30	GIO37	GIO43	DDR_DQS1	DDR_ DQGATE0	DDR_ DQGATE1
R	RSV1	GIO22	V_{PP}	RSV2	GIO39	GIO42	DDR_DQ13	DDR_DQ10	DDR_DQ7
P	USB_DM	V_{SSA18_USB}	V_{SSA33_USB}	V_{DDA33_USB}	V_{DDS33}	V_{DDS33}	V_{DDS18}	V_{SS}	V_{DD18_DDR}
N	USB_DP	USB_VBUS	N.B.	V_{DDA18_PLL}	V_{DD18_USB}	V_{DDS33}	N.B.	V_{SS}	V_{DD18_DDR}
M	USB_ID	PWRCNTON	PWRST	V_{SSA}	VDDA12LDO_ USB	CV_{DD}	V_{SS}	V_{SS}	V_{SS}
L	MXI1	V_{SS_MX1}	PWCTRO3	PWCTRO2	PWCTRO1	V_{DDMXI}	V_{SS}	V_{SS}	V_{SS}
K	MXO1	PWCTRO0	N.B.	PWCTRIO6	PWCTRIO5	V_{DD18_PRTCSS}	V_{DD12_PRTCSS}	CV_{DD}	V_{SS}

B	C
A	D

(1) N.B stands for No-Ball.

Figure 2-3. ZCE Pin Map [Quadrant B]

Copyright © 2009–2011, Texas Instruments Incorporated

10	11	12	13	14	15	16	17	18	19	
DDR_DQ4	DDR_CLK	$\overline{\text{DDR_CLK}}$	$\overline{\text{DDR_WE}}$	DDR_BA0	DDR_A2	DDR_A6	DDR_A8	DDR_A11	V_{SS}	W
DDR_DQ3	DDR_DQ1	$\overline{\text{DDR_CAS}}$	DDR_BA2	DDR_A1	DDR_A5	DDR_A10	DDR_A12	EM_A13	EM_A11	V
N.B.	DDR_DQ0	$\overline{\text{DDR_RAS}}$	N.B.	DDR_A0	DDR_A4	DDR_A9	N.B.	EM_A12	EM_A10	U
DDR_DQS0	DDR_DQM0	$\overline{\text{DDR_CS}}$	DDR_BA1	DDR_A3	DDR_A7	DDR_A13	EM_A7	EM_A9	EM_A8	T
DDR_DQ2	DDR_PADREFP	V_{DD18_DDR}	DDR_CKE	$V_{DD_AEMIF1_18_33}$	EM_A3	EM_A5	EM_BA1	EM_A6	EM_A4	R
V_{DD18_DDR}	DDR_VREF	V_{DD18_DDR}	V_{SS}	$V_{DD_AEMIF1_18_33}$	EM_D12	EM_D14	EM_BA0	EM_D15	EM_D13	P
N.B.	V_{DD18_DDR}	V_{SS}	N.B.	V_{SS}	EM_D8	EM_D11	N.B.	EM_D10	EM_D9	N
CV_{DD}	V_{SS}	CV_{DD}	CV_{DD}	V_{DDS18}	EM_CLK	EM_ADV	$\overline{\text{EM_CE[0]}}$	EM_A2	EM_A1	M
V_{SS}	V_{SS}	V_{DDS33}	CV_{DD}	$V_{DD_AEMIF2_18_33}$	EM_D4	EM_D7	EM_A0	EM_D6	EM_D5	L
V_{SS}	V_{SS}	CV_{DD}	N.B.	$V_{DD_AEMIF2_18_33}$	EM_D3	EM_D1	N.B.	EM_D0	EM_D2	K

B	C
A	D

(1) N.B stands for No-Ball.

Figure 2-4. ZCE Pin Map [Quadrant C]

B	C
A	D

	10	11	12	13	14	15	16	17	18	19
J	V_{SS}	V_{SS}	CV_{DD}	V_{SS}	CV_{DD}	EM_WE	MMCSD0_CLK	$\overline{EM_CE[1]}$	EM_WAIT	EM_OE
H	V_{SS}	V_{DDS18}	CV_{DD}	V_{DDS33}	V_{DDS18}	MMCSD0_CMD	MMCSD0_DATA3	MMCSD0_DATA2	MMCSD0_DATA0	MMCSD0_DATA1
G	N.B.	V_{SS}	V_{SS}	N.B.	V_{DDS18}	HSYNC	YOUT7	N.B.	VSYNC	YOUT6
F	V_{DDS33}	V_{SSA12_DAC}	$V_{DD_ISIF18_33}$	$V_{DD_ISIF18_33}$	V_{SS}	YOUT5	YOUT3	YOUT1	YOUT4	YOUT2
E	VDDA33_VC	VSSA18_DAC	VDDA12_DAC	C_WE_FIELD	V_{SS}	COUT5	YOUT0	COUT4	COUT7	COUT6
D	V_{DDA18_DAC}	VREF	YIN4	PCLK	YIN1	YIN0	COUT3	COUT0	COUT1	COUT2
C	N.B.	COMPPR	YIN7	N.B.	HD	CIN6	CIN2	N.B.	FIELD	LCD_OE
B	VFB	IDACOUT	COMPY	YIN5	VD	YIN2	CIN5	CIN0	VCLK	EXTCLK
A	TVOUT	IREF	COMPPB	YIN6	YIN3	CIN7	CIN4	CIN3	CIN1	V_{SS}

(1) N.B stands for No-Ball.

Figure 2-5. ZCE Pin Map [Quadrant D]

Copyright © 2009–2011, Texas Instruments Incorporated

2.8 Terminal Functions

Table 2-5 provides a complete pin description list which shows external signal names, the associated pin (ball) numbers along with the mechanical package designator, the pin type, whether the pin has any internal pullup or pulldown resistors, and a functional pin description. For more detailed information on device configuration, peripheral selection, multiplexed/shared pins, and debugging considerations, see Section 3.

Table 2-5. Pin Descriptions

Name	BGA ID	Type (1)	Group	Power Supply (2)	IPU IPD (3)	Reset State	Description (4)
CIN7 (5)	A15	I/O	ISIF	$V_{DD_ISIF18_33}$	IPD	Input	Standard ISIF Analog Front End (AFE): raw[7] YCC 16-bit: time multiplexed between chroma: CB/CR[07] YCC 08-bit (which allows for 2 simultaneous decoder inputs), it is time multiplexed between luma and chroma of the upper channel. Y/CB/CR[07]
CIN6 (5)	C15	I/O	ISIF	$V_{DD_ISIF18_33}$	IPD	Input	Standard ISIF Analog Front End (AFE): raw[6] YCC 16-bit: time multiplexed between chroma: CB/CR[06] YCC 08-bit (which allows for 2 simultaneous decoder inputs), it is time multiplexed between luma and chroma of the upper channel. Y/CB/CR[06]
CIN5 (5)	B16	I/O	ISIF	$V_{DD_ISIF18_33}$	IPD	Input	Standard ISIF Analog Front End (AFE): raw[5] YCC 16-bit: time multiplexed between chroma: CB/CR[05] YCC 08-bit (which allows for 2 simultaneous decoder inputs), it is time multiplexed between luma and chroma of the upper channel. Y/CB/CR[05]
CIN4 (5)	A16	I/O	ISIF	$V_{DD_ISIF18_33}$	IPD	Input	Standard ISIF Analog Front End (AFE): raw[4] YCC 16-bit: time multiplexed between chroma: CB/CR[04] YCC 08-bit (which allows for 2 simultaneous decoder inputs), it is time multiplexed between luma and chroma of the upper channel. Y/CB/CR[04]
CIN3 (5)	A17	I/O	ISIF	$V_{DD_ISIF18_33}$	IPD	Input	Standard ISIF Analog Front End (AFE): raw[3] YCC 16-bit: time multiplexed between chroma: CB/CR[03] YCC 08-bit (which allows for 2 simultaneous decoder inputs), it is time multiplexed between luma and chroma of the upper channel. Y/CB/CR[03]
CIN2 (5)	C16	I/O	ISIF	$V_{DD_ISIF18_33}$	IPD	Input	Standard ISIF Analog Front End (AFE): raw[2] YCC 16-bit: time multiplexed between chroma: CB/CR[02] YCC 08-bit (which allows for 2 simultaneous decoder inputs), it is time multiplexed between luma and chroma of the upper channel. Y/CB/CR[02]

(1) I = Input, O = Output, Z = High impedance, S = Supply voltage, GND = Ground, A = Analog signal.
(2) Specifies the operating I/O supply voltage for each signal. See Section 6.3 , *Power Supplies* for more detail.
(3) PD = pull-down, PU = pull-up. (To pull up a signal to the opposite supply rail, a 1 kΩ resistor should be used.)
(4) To reduce EMI and reflections, depending on the trace length, approximately 22 Ω to 50 Ω damping resistors are recommend on the following outputs placed near the device: YOUT(0-7),COUT(0-7), HSYNC,VSYNC,LCD_OE,FIELD, and,VCLK. The trace lengths should be minimized.
(5) The Y input (YIN[7:0]) and C input (CIN[7:0]) buses can be swapped by programming the field bit YCINSWP in the VPFE CCD Configuration (CCDCFG) register (0x01C7 0136h).
IF YCINSWP bit is 0 (default) YIN[7:0] = Y signal / CIN[7:0] = C signal .
IF YCINSWP bit is 1 YIN[7:0] = C signal / CIN[7:0] = Y signal
For more information, see the TMS320DM36x Video Processing Front End (VPFE) Reference Guide (literature number SPRUFG8).

Copyright © 2009–2011, Texas Instruments Incorporated

Table 2-5. Pin Descriptions (continued)

Name	BGA ID	Type (1)	Group	Power Supply (2)	IPU IPD (3)	Reset State	Description (4)
CIN1 (5)	A18	I/O	ISIF	$V_{DD_ISIF18_33}$	IPD	Input	Standard ISIF Analog Front End (AFE): raw[1] YCC 16-bit: time multiplexed between chroma: CB/CR[01] YCC 08-bit (which allows for 2 simultaneous decoder inputs), it is time multiplexed between luma and chroma of the upper channel. Y/CB/CR[01]
CIN0 (5)	B17	I/O	ISIF	$V_{DD_ISIF18_33}$	IPD	Input	Standard ISIF Analog Front End (AFE): raw[0] YCC 16-bit: time multiplexed between chroma: CB/CR[00] YCC 08-bit (which allows for 2 simultaneous decoder inputs), it is time multiplexed between luma and chroma of the upper channel. Y/CB/CR[00]
YIN7 (5) / GIO103 /SPI3_SCLK	C12	I/O	ISIF/ GIO / SPI3	$V_{DD_ISIF18_33}$	IPD	Input	Standard ISIF Analog Front End (AFE): raw[15] YCC 16-bit: time multiplexed between luma: Y[07] YCC 08-bit (which allows for 2 simultaneous decoder inputs), it is time multiplexed between luma and chroma of the lower channel. Y/CB/CR[07] GIO: GIO[103] SPI3: Clock
YIN6 (5) / GIO102 /SPI3_SIMO	A13	I/O	ISIF / GIO / SPI3	$V_{DD_ISIF18_33}$	IPD	Input	Standard ISIF Analog Front End (AFE): raw[14] YCC 16-bit: time multiplexed between luma: Y[06] YCC 08-bit (which allows for 2 simultaneous decoder inputs), it is time multiplexed between luma and chroma of the lower channel. Y/CB/CR[06] GIO: GIO[102] SPI3: Slave Input Master Output Data Signal
YIN5 (6) / GIO101 /SPI3_SCS[0]	B13	I/O	ISIF / GIO / SPI3	$V_{DD_ISIF18_33}$	IPD	Input	Standard ISIF Analog Front End (AFE): raw[13] YCC 16-bit: time multiplexed between luma: Y[05] YCC 08-bit (which allows for 2 simultaneous decoder inputs), it is time multiplexed between luma and chroma of the lower channel. Y/CB/CR[05] GIO: GIO[101] SPI3: Chip Select 0
YIN4 (6) / GIO100 / SPI3_SOMI / SPI3_SCS[1]	D12	I/O	ISIF / GIO / SPI3	$V_{DD_ISIF18_33}$	IPD	Input	Standard ISIF Analog Front End (AFE): raw[12] YCC 16-bit: time multiplexed between luma: Y[04] YCC 08-bit (which allows for 2 simultaneous decoder inputs), it is time multiplexed between luma and chroma of the lower channel. Y/CB/CR[04] GIO: GIO[100] SPI3: Slave Output Master Input Data Signal SPI3: Chip Select 1

(6) The Y input (YIN[7:0]) and C input (CIN[7:0]) buses can be swapped by programming the field bit YCINSWP in the VPFE CCD Configuration (CCDCFG) register (0x01C7 0136h).
IF YCINSWP bit is 0 (default) YIN[7:0] = Y signal / CIN[7:0] = C signal .
IF YCINSWP bit is 1 YIN[7:0] = C signal / CIN[7:0] = Y signal
For more information, see the TMS320DM36x Video Processing Front End (VPFE) Reference Guide (literature number SPRUFG8).

Copyright © 2009–2011, Texas Instruments Incorporated

Table 2-5. Pin Descriptions (continued)

Name	BGA ID	Type (1)	Group	Power Supply (2)	IPU IPD (3)	Reset State	Description (4)
YIN3 (6) / GIO99	A14	I/O	ISIF / GIO	$V_{DD_ISIF18_33}$	IPD	Input	Standard ISIF Analog Front End (AFE): raw[11] YCC 16-bit: time multiplexed between luma: Y[03] YCC 08-bit (which allows for 2 simultaneous decoder inputs), it is time multiplexed between luma and chroma of the lower channel. Y/CB/CR[03] GIO: GIO[99]
YIN2 (6) / GIO98	B15	I/O	ISIF / GIO	$V_{DD_ISIF18_33}$	IPD	Input	Standard ISIF Analog Front End (AFE): raw[10] YCC 16-bit: time multiplexed between luma: Y[02] YCC 08-bit (which allows for 2 simultaneous decoder inputs), it is time multiplexed between luma and chroma of the lower channel. Y/CB/CR[02] GIO: GIO[98]
YIN1 (6) / GIO97	D14	I/O	ISIF / GIO	$V_{DD_ISIF18_33}$	IPD	Input	Standard ISIF Analog Front End (AFE): raw[09] YCC 16-bit: time multiplexed between luma: Y[01] YCC 08-bit (which allows for 2 simultaneous decoder inputs), it is time multiplexed between luma and chroma of the lower channel. Y/CB/CR[01] GIO: GIO[97]
YIN0 (7) / GIO96	D15	I/O	ISIF / GIO	$V_{DD_ISIF18_33}$	IPD	Input	Standard ISIF Analog Front End (AFE): raw[08] YCC 16-bit: time multiplexed between luma: Y[00] YCC 08-bit (which allows for 2 simultaneous decoder inputs), it is time multiplexed between luma and chroma of the lower channel. Y/CB/CR[00] GIO: GIO[96]
HD / GIO95	C14	I/O	ISIF / GIO	$V_{DD_ISIF18_33}$	IPD	Input	Horizontal synchronization signal that can be either an input (slave mode) or an output (master mode). Tells the ISIF when a new line starts. GIO: GIO[95]
VD / GIO94	B14	I/O	ISIF / GIO	$V_{DD_ISIF18_33}$	IPD	Input	Vertical synchronization signal that can be either an input (slave mode) or an output (master mode). Tells the ISIF when a new frame starts. GIO: GIO[94]
C_WE_FIELD / GIO93 / CLKOUT0 / USBDRVVBUS	E13	I/O	ISIF / GIO / CLKOUT / USB	$V_{DD_ISIF18_33}$	IPD	Input	Write enable input signal is used by external device (AFE/TG) to gate the DDR output of the ISIF module. Alternately, the field identification input signal is used by external device (AFE/TG) to indicate the which of two frames is input to the ISIF module for sensors with interlaced output. ISIF handles 1- or 2-field sensors in hardware. GIO: GIO[93] CLKOUT0: Clock Output USB: Digital output to control external 5 V supply
PCLK	D13	I/O/Z	ISIF	$V_{DD_ISIF18_33}$	IPD	Input	Pixel clock input (strobe for lines CI7 through YI0)

(7) The Y input (YIN[7:0]) and C input (CIN[7:0]) buses can be swapped by programming the field bit YCINSWP in the VPFE CCD Configuration (CCDCFG) register (0x01C7 0136h).
IF YCINSWP bit is 0 (default) YIN[7:0] = Y signal / CIN[7:0] = C signal .
IF YCINSWP bit is 1 YIN[7:0] = C signal / CIN[7:0] = Y signal
For more information, see the TMS320DM36x Video Processing Front End (VPFE) Reference Guide (literature number SPRUFG8).

Copyright © 2009–2011, Texas Instruments Incorporated

Table 2-5. Pin Descriptions (continued)

Name	BGA ID	Type (1)	Group	Power Supply (2)	IPU IPD (3)	Reset State	Description (4)
YOUT7(R7) (8)	G16	I/O	VENC	V_{DDS33}		Input	Digital Video Out: VENC settings determine function (9). For more details, see the *DM36x DMSoC Video Processor Back End User's Guide* (SPRUFG9).
YOUT6(R6) (8)	G19	I/O	VENC	V_{DDS33}		Input	Digital Video Out: VENC settings determine function (9). For more details, see the *DM36x DMSoC Video Processor Back End User's Guide* (SPRUFG9).
YOUT5(R5) (8)	F15	I/O	VENC	V_{DDS33}		Input	Digital Video Out: VENC settings determine function (9). For more details, see the *DM36x DMSoC Video Processor Back End User's Guide* (SPRUFG9).
YOUT4(R4) (8)	F18	I/O	VENC	V_{DDS33}		Input	Digital Video Out: VENC settings determine function (9). For more details, see the *DM36x DMSoC Video Processor Back End User's Guide* (SPRUFG9).
YOUT3(R3) (8)	F16	I/O	VENC	V_{DDS33}		Input	Digital Video Out: VENC settings determine function (9). For more details, see the *DM36x DMSoC Video Processor Back End User's Guide* (SPRUFG9).
YOUT2(G7) (8)	F19	I/O	VENC	V_{DDS33}		Input	Digital Video Out: VENC settings determine function (9). For more details, see the *DM36x DMSoC Video Processor Back End User's Guide* (SPRUFG9).
YOUT1(G6) (10)	F17	I/O	VENC	V_{DDS33}		Input	Digital Video Out: VENC settings determine function (11). For more details, see the *DM36x DMSoC Video Processor Back End User's Guide* (SPRUFG9).
YOUT0(G5) (10)	E16	I/O	VENC	V_{DDS33}		Input	Digital Video Out: VENC settings determine function (11). For more details, see the *DM36x DMSoC Video Processor Back End User's Guide* (SPRUFG9).
HSYNC / GIO84	G15	I/O	VENC / GIO	V_{DDS33}		Input	Video Encoder: Horizontal Sync (11) GIO: GIO[84]
VSYNC / GIO83	G18	I/O	VENC / GIO	V_{DDS33}		Input	Video Encoder: Vertical Sync (11) GIO: GIO[83]
LCD_OE / GIO82	C19	I/O	VENC / GIO	V_{DDS33}		Output	Video Encoder: Data valid duration (11) GIO: GIO[82]

(8) The Y output (YOUT[7:0]) and C output (COUT[7:0]) buses can be swapped by programming the field bit YCOUTSWP in the VPFE CCD Configuration (CCDCFG) register (0x01C7 0136h). If the YCOUTSWP bit is 0 (default), YOUT[7:0] = Y signal / COUT[7:0] = C signal . If the YCOUTSWP bit is 1, YOUT[7:0] = C signal / COUT[7:0] = Y signal. For more information, see the *TMS320DM36x Video Processing Front End (VPFE) Reference Guide* (literature number SPRUFG8).

(9) To reduce EMI and reflections, depending on the trace length, approximately 22 Ω to 50 Ω damping resistors are recommend on the following outputs placed near the device: YOUT(0-7),COUT(0-7), HSYNC,VSYNC,LCD_OE,FIELD, and,VCLK. The trace lengths should be minimized.

(10) The Y output (YOUT[7:0]) and C output (COUT[7:0]) buses can be swapped by programming the field bit YCOUTSWP in the VPFE CCD Configuration (CCDCFG) register (0x01C7 0136h). If the YCOUTSWP bit is 0 (default), YOUT[7:0] = Y signal / COUT[7:0] = C signal . If the YCOUTSWP bit is 1, YOUT[7:0] = C signal / COUT[7:0] = Y signal. For more information, see the *TMS320DM36x Video Processing Front End (VPFE) Reference Guide* (literature number SPRUFG8).

(11) To reduce EMI and reflections, depending on the trace length, approximately 22 Ω to 50 Ω damping resistors are recommend on the following outputs placed near the device: YOUT(0-7),COUT(0-7), HSYNC,VSYNC,LCD_OE,FIELD, and,VCLK. The trace lengths should be minimized.

Copyright © 2009–2011, Texas Instruments Incorporated

Table 2-5. Pin Descriptions (continued)

Name	BGA ID	Type (1)	Group	Power Supply (2)	IPU IPD (3)	Reset State	Description (4)
GIO80 / EXTCLK / B2 / PWM3	B19	I/O	GIO / VENC / PWM3	V_{DDS33}	IPD	Input	GIO: GIO[80] Video Encoder: External clock Input, used if clock rates > 27 MHz are needed, e.g. 74.25 MHz for HDTV digital output. Digital Video Out: B2 (11). For more details, see the *DM36x DMSoC Video Processor Back End User's Guide* (SPRUFG9). PWM3: PWM3 Output
VCLK / GIO79	B18	I/O	VENC / GIO	V_{DDS33}		Input	Video Encoder: Video Output Clock (11) GIO: GIO[79]
GIO92 / COUT7(G4) (10) / PWM0	E18	I/O	GIO / VENC / PWM0	V_{DDS33}		Input	GIO: GIO[92] Digital Video Out: VENC settings determine function (11). For more details, see the *DM36x DMSoC Video Processor Back End User's Guide* (SPRUFG9). PWM0: PWM0 Output
GIO91 / COUT6(G3) (10) / PWM1	E19	I/O	GIO / VENC / PWM1	V_{DDS33}		Input	GIO: GIO[91] Digital Video Out: VENC settings determine function (11). For more details, see the *DM36x DMSoC Video Processor Back End User's Guide* (SPRUFG9). PWM1: PWM1 Output
GIO90 / COUT5(G2) (10) / PWM2 / RTO0	E15	I/O	GIO / VENC /PWM2 / RTO0	V_{DDS33}		Input	GIO: GIO[90] Digital Video Out: VENC settings determine function (11). For more details, see the *DM36x DMSoC Video Processor Back End User's Guide* (SPRUFG9). PWM2: PWM2 Output RTO0: RTO0 Output
GIO89 / COUT4(B7) (12)/ PWM2 / RTO1	E17	I/O	GIO / VENC / PWM2 / RTO1	V_{DDS33}		Input	GIO: GIO[89] Digital Video Out: VENC settings determine function (13). For more details, see the *DM36x DMSoC Video Processor Back End User's Guide* (SPRUFG9). PWM2: PWM2 Output RTO1: RTO1 Output

(12) The Y output (YOUT[7:0]) and C output (COUT[7:0]) buses can be swapped by programming the field bit YCOUTSWP in the VPFE CCD Configuration (CCDCFG) register (0x01C7 0136h). If the YCOUTSWP bit is 0 (default), YOUT[7:0] = Y signal / COUT[7:0] = C signal . If the YCOUTSWP bit is 1, YOUT[7:0] = C signal / COUT[7:0] = Y signal. For more information, see the *TMS320DM36x Video Processing Front End (VPFE) Reference Guide* (literature number SPRUFG8).

(13) To reduce EMI and reflections, depending on the trace length, approximately 22 Ω to 50 Ω damping resistors are recommend on the following outputs placed near the device: YOUT(0-7),COUT(0-7), HSYNC,VSYNC,LCD_OE,FIELD, and,VCLK. The trace lengths should be minimized.

Copyright © 2009–2011, Texas Instruments Incorporated

Table 2-5. Pin Descriptions (continued)

Name	BGA ID	Type (1)	Group	Power Supply (2)	IPU IPD (3)	Reset State	Description (4)
GIO88 / COUT3(B6) (12)/ PWM2 / RTO2	D16	I/O	GIO / VENC / PWM2 / RTO2	V_{DDS33}		Input	GIO: GIO[88] Digital Video Out: VENC settings determine function(13). For more details, see the *DM36x DMSoC Video Processor Back End User's Guide* (SPRUFG9). PWM2: PWM2 Output RTO2: RTO2 Output
GIO87 / COUT2(B5)(12) / PWM2 / RTO3	D19	I/O	GIO / VENC /PWM2 / RTO3	V_{DDS33}		Input	GIO: GIO[87] Digital Video Out: VENC settings determine function(13). For more details, see the *DM36x DMSoC Video Processor Back End User's Guide* (SPRUFG9). PWM2: PWM2 Output RTO3: RTO3 Output
GIO86 / COUT1(B4)(12) / PWM3 / STTRIG	D18	I/O	GIO / VENC / PWM3	V_{DDS33}		Input	GIO: GIO[86] Digital Video Out: VENC settings determine function(13). For more details, see the *DM36x DMSoC Video Processor Back End User's Guide* (SPRUFG9). PWM3: PWM3 Output STTRIG: Camera FLASH control trigger signal
GIO85 / COUT0(B3) (14)/ PWM3	D17	I/O	GIO / VENC / PWM3	V_{DDS33}		Input	GIO: GIO[85] Digital Video Out: VENC settings determine function(15). For more details, see the *DM36x DMSoC Video Processor Back End User's Guide* (SPRUFG9). PWM3: PWM3 Output
GIO81(OSCCFG) / LCD_FIELD / R2 / PWM3	C18	I/O	GIO / VENC / PWM3	V_{DDS33}		Input	GIO: GIO[81] **Note**: This pin will be used as oscillator configuration (OSCCFG). The GIO81(OSCCFG) state is latched during reset, and it specifies the oscillation frequency range mode of the pin. See Section 3.7.6 for more details. Video Encoder: Field identifier for interlaced display formats(15). For more details, see the *DM36x DMSoC Video Processor Back End User's Guide* (SPRUFG9). Digital Video Out: R2(15) PWM3: PWM3 Output

(14) The Y output (YOUT[7:0]) and C output (COUT[7:0]) buses can be swapped by programming the field bit YCOUTSWP in the VPFE CCD Configuration (CCDCFG) register (0x01C7 0136h). If the YCOUTSWP bit is 0 (default), YOUT[7:0] = Y signal / COUT[7:0] = C signal . If the YCOUTSWP bit is 1, YOUT[7:0] = C signal / COUT[7:0] = Y signal. For more information, see the *TMS320DM36x Video Processing Front End (VPFE) Reference Guide* (literature number SPRUFG8).

(15) To reduce EMI and reflections, depending on the trace length, approximately 22 Ω to 50 Ω damping resistors are recommend on the following outputs placed near the device: YOUT(0-7),COUT(0-7), HSYNC,VSYNC,LCD_OE,FIELD, and,VCLK. The trace lengths should be minimized.

Copyright © 2009–2011, Texas Instruments Incorporated

Table 2-5. Pin Descriptions (continued)

Name	BGA ID	Type (1)	Group	Power Supply (2)	IPU IPD (3)	Reset State	Description (4)
VREF	D11	A I	Video DAC	V_{DDA18_DAC}			Video DAC: Reference voltage for DAC. For more details, see Section 6.12.2.4, *DAC and Video Buffer Electrical Data/Timing.* **Note**: If the DAC peripheral is not used, this pin must be tied directly to V_{SS} for proper device operation.
IREF	A11	A I/O	Video DAC	V_{DDA18_DAC}			Video DAC: Sets reference current for DAC. An external resistor with nominal value, 2400 ohms, is connected between IREF and V_{SS}. For more details, see Section 6.12.2.4, *DAC and Video Buffer Electrical Data/Timing.* **Note**: If the DAC peripheral is not used, this pin must be tied directly to V_{SS} for proper device operation.
IDACOUT	B11	A I/O	Video DAC	V_{DDA18_DAC}			Video DAC: Current source input from DAC. An external resistor with nominal value, 2100 ohms, is connected between IDACOUT and VFB. For more details, see Section 6.12.2.4, *DAC and Video Buffer Electrical Data/Timing.* **Note**: If the DAC peripheral is not used at all in the application, this pin can either be connected to V_{SS} or be left open.
VFB	B10	A I/O	Video DAC	V_{DDA18_DAC}			Video DAC: Amplifier feedback node. An external resistor with nominal value, 2150 ohms, is connected between VFB and TVOUT. For more details, see Section 6.12.2.4, *DAC and Video Buffer Electrical Data/Timing.* **Note**: If the DAC peripheral is not used at all in the application, this pin can either be connected to V_{SS} or be left open.
TVOUT	A10	A I/O	Video DAC	V_{DDA18_DAC}			Video DAC: DAC1video output. An external resistor with nominal value, 2150 ohms, is connected between TVOUT and VFB. This is the output node that drives the load (75 ohms). For more details, see Section 6.12.2.4, *DAC and Video Buffer Electrical Data/Timing.* **Note**: If the DAC peripheral is not used at all in the application, this pin can either be connected to V_{SS} or be left open.
COMPY	B12	A O	Video DAC	V_{DDA18_DAC}			Video DAC: Analog video signal component output Y **Note**: If the DAC peripheral is not used at all in the application, this pin can either be connected to V_{SS} or be left open.
COMPPB	A12	A O	Video DAC	V_{DDA18_DAC}			Video DAC: Analog video signal component output Pb **Note**: If the DAC peripheral is not used at all in the application, this pin can either be connected to V_{SS} or be left open.
COMPPR	C11	A O	Video DAC	V_{DDA18_DAC}			Video DAC: Analog video signal component output Pr **Note**: If the DAC peripheral is not used at all in the application, this pin can either be connected to V_{SS} or be left open.
V_{DDA18_DAC}	D10	PWR	Video DAC	V_{DDA18_DAC}			Video DAC: Analog 1.8-V power **Note**: If the DAC peripheral is not used, this pin must be tied directly to V_{SS} for proper device operation.
V_{DDA12_DAC}	E12	PWR	Video Dac	V_{DDA12_DAC}			Video DAC: Analog 1.2-V power **Note**: If the DAC peripheral is not used, this pin must be tied directly to V_{SS} for proper device operation.

Copyright © 2009–2011, Texas Instruments Incorporated

Table 2-5. Pin Descriptions (continued)

Name	BGA ID	Type (1)	Group	Power Supply (2)	IPU IPD (3)	Reset State	Description (4)
V_{SSA18_DAC}	E11	GND	Video DAC				Video DAC: Analog 1.8-V ground **Note**: If the DAC peripheral is not used, this pin must be tied directly to V_{SS} for proper device operation.
V_{SSA12_DAC}	F11	GND	Video DAC				Video DAC: Analog 1.2-V ground **Note**: If the DAC peripheral is not used, this pin must be tied directly to V_{SS} for proper device operation.
DDR_CLK	W11	O	DDR	V_{DD18_DDR}			DDR Data Clock
$\overline{\text{DDR_CLK}}$	W12	O	DDR	V_{DD18_DDR}			DDR Complementary Data Clock
$\overline{\text{DDR_RAS}}$	U12	O	DDR	V_{DD18_DDR}			DDR Row Address Strobe
$\overline{\text{DDR_CAS}}$	V12	O	DDR	V_{DD18_DDR}			DDR Column Address Strobe
$\overline{\text{DDR_WE}}$	W13	O	DDR	V_{DD18_DDR}			DDR Write Enable
$\overline{\text{DDR_CS}}$	T12	O	DDR	V_{DD18_DDR}			DDR Chip Select
DDR_CKE	R13	O	DDR	V_{DD18_DDR}			DDR Clock Enable
DDR_DQM[1]	W6	O	DDR	V_{DD18_DDR}			Data mask input for DDR_DQ[15:8]
DDR_DQM[0]	T11	O	DDR	V_{DD18_DDR}			Data mask input for DDR_DQ[7:0]
DDR_DQS[1]	T7	I/O	DDR	V_{DD18_DDR}			Data strobe input/outputs for each byte of the 16-bit data bus used to synchronize the data transfers. Output to DDR2 when writing and inputs when reading. They are used to synchronize the data transfers. DDR_DQS1: For DDR_DQ[15:8]
DDR_DQS[0]	T10	I/O	DDR	V_{DD18_DDR}			Data strobe input/outputs for each byte of the 16-bit data bus used to synchronize the data transfers. Output to DDR2 when writing and inputs when reading. They are used to synchronize the data transfers. DDR_DQS0: For DDR_DQ[7:0]
DDR_DQSN[1]	U6	I/O	DDR	V_{DD18_DDR}			DDR: Complimentary data strobe input/outputs for each byte of the 16-bit data bus. They are outputs to the DDR2 when writing and inputs when reading. They are used to synchronize the data transfers. **Note**: This signal is used in double ended differential memory interfaces supported by the device.
DDR_DQSN[0]	U9	I/O	DDR	V_{DD18_DDR}			DDR: Complimentary data strobe input/outputs for each byte of the 16-bit data bus. They are outputs to the DDR2 when writing and inputs when reading. They are used to synchronize the data transfers. **Note**: This signal is used in double ended differential memory interfaces supported by the device.
DDR_BA[2]	V13	O	DDR	V_{DD18_DDR}			Bank select outputs. Two are required for 1Gb DDR2 memories.
DDR_BA[1]	T13	O	DDR	V_{DD18_DDR}			Bank select outputs. Two are required for 1Gb DDR2 memories.
DDR_BA[0]	W14	O	DDR	V_{DD18_DDR}			Bank select outputs. Two are required for 1Gb DDR2 memories.
DDR_A13	T16	O	DDR	V_{DD18_DDR}			DDR Address Bus bit 13
DDR_A12	V17	O	DDR	V_{DD18_DDR}			DDR Address Bus bit 12
DDR_A11	W18	O	DDR	V_{DD18_DDR}			DDR Address Bus bit 11
DDR_A10	V16	O	DDR	V_{DD18_DDR}			DDR Address Bus bit 10
DDR_A9	U16	O	DDR	V_{DD18_DDR}			DDR Address Bus bit 09
DDR_A8	W17	O	DDR	V_{DD18_DDR}			DDR Address Bus bit 08
DDR_A7	T15	O	DDR	V_{DD18_DDR}			DDR Address Bus bit 07
DDR_A6	W16	O	DDR	V_{DD18_DDR}			DDR Address Bus bit 06

Copyright © 2009–2011, Texas Instruments Incorporated

Table 2-5. Pin Descriptions (continued)

Name	BGA ID	Type (1)	Group	Power Supply (2)	IPU IPD (3)	Reset State	Description (4)
DDR_A5	V15	O	DDR	V_{DD18_DDR}			DDR Address Bus bit 05
DDR_A4	U15	O	DDR	V_{DD18_DDR}			DDR Address Bus bit 04
DDR_A3	T14	O	DDR	V_{DD18_DDR}			DDR Address Bus bit 03
DDR_A2	W15	O	DDR	V_{DD18_DDR}			DDR Address Bus bit 02
DDR_A1	V14	O	DDR	V_{DD18_DDR}			DDR Address Bus bit 01
DDR_A0	U14	O	DDR	V_{DD18_DDR}			DDR Address Bus bit 00
DDR_DQ15	V6	I/O	DDR	V_{DD18_DDR}			DDR Data Bus bit 15
DDR_DQ14	V7	I/O	DDR	V_{DD18_DDR}			DDR Data Bus bit 14
DDR_DQ13	R7	I/O	DDR	V_{DD18_DDR}			DDR Data Bus bit 13
DDR_DQ12	W7	I/O	DDR	V_{DD18_DDR}			DDR Data Bus bit 12
DDR_DQ11	V8	I/O	DDR	V_{DD18_DDR}			DDR Data Bus bit 11
DDR_DQ10	R8	I/O	DDR	V_{DD18_DDR}			DDR Data Bus bit 10
DDR_DQ9	U8	I/O	DDR	V_{DD18_DDR}			DDR Data Bus bit 09
DDR_DQ8	W8	I/O	DDR	V_{DD18_DDR}			DDR Data Bus bit 08
DDR_DQ7	R9	I/O	DDR	V_{DD18_DDR}			DDR Data Bus bit 07
DDR_DQ6	W9	I/O	DDR	V_{DD18_DDR}			DDR Data Bus bit 06
DDR_DQ5	V9	I/O	DDR	V_{DD18_DDR}			DDR Data Bus bit 05
DDR_DQ4	W10	I/O	DDR	V_{DD18_DDR}			DDR Data Bus bit 04
DDR_DQ3	V10	I/O	DDR	V_{DD18_DDR}			DDR Data Bus bit 03
DDR_DQ2	R10	I/O	DDR	V_{DD18_DDR}			DDR Data Bus bit 02
DDR_DQ1	V11	I/O	DDR	V_{DD18_DDR}			DDR Data Bus bit 01
DDR_DQ0	U11	I/O	DDR	V_{DD18_DDR}			DDR Data Bus bit 00
DDR_ DQGATE0	T8	O	DDR	V_{DD18_DDR}			DDR: Loopback signal for external DQS gating. Route to DDR and back to DDR_DQGATE1 with same constraints as used for DDR clock and data.
DDR_ DQGATE1	T9	I	DDR	V_{DD18_DDR}			DDR: Loopback signal for external DQS gating. Route to DDR and back to DDR_DQGATE0 with same constraints as used for DDR clock and data.
DDR_VREF	P11	PWR	DDR	V_{DD18_DDR}			DDR: DDR_VREF is .5* V_{DD18_DDR} = 0.9V for SSTL2 specific reference voltage.
DDR_PADREFP	R11	O	DDR	V_{DD18_DDR}			DDR: External resistor (50 ohm to ground)
EM_A13 / GIO78 / BTSEL[2]	V18	I/O/Z	AEMIF / GIO / BTSEL[2]	$V_{DD_AEMIF1_18_33}$	IPU/IPD disabled by default	Input	Async EMIF: Address Bus bit[13] GIO: GIO[78] BTSEL[2]: See Section 3.2, *Device Boot Modes* for system usage of these pins.
EM_A12 / GIO77 / BTSEL[1]	U18	I/O/Z	AEMIF / GIO / BTSEL[1]	$V_{DD_AEMIF1_18_33}$	IPU/IPD disabled by default	Input	Async EMIF: Address Bus bit[12] GIO: GIO[77] BTSEL[1]: See Section 3.2, *Device Boot Modes* for system usage of these pins.
EM_A11 / GIO76 / BTSEL[0]	V19	I/O/Z	AEMIF / GIO / BTSEL[0]	$V_{DD_AEMIF1_18_33}$	IPU/IPD disabled by default	Input	Async EMIF: Address Bus bit[11] GIO: GIO[76] BTSEL[0]: See Section 3.2, *Device Boot Modes* for system usage of these pins.

Copyright © 2009–2011, Texas Instruments Incorporated

Table 2-5. Pin Descriptions (continued)

Name	BGA ID	Type (1)	Group	Power Supply (2)	IPU IPD (3)	Reset State	Description (4)
EM_A10 / GIO75 / AECFG[2]	U19	I/O/Z	AEMIF / GIO / AECFG [2]	$V_{DD_AEMIF1_18_33}$	IPU/IPD disabled by default	Input	Async EMIF: Address Bus bit[10] GIO: GIO[75] AECFG[2]: See Section 3.2, *Device Boot Modes* and Table 3-14, *AECFG (Async EMIF Configuration)* for system usage of these pins.
EM_A9 / GIO74 / AECFG[1]	T18	I/O/Z	AEMIF / GIO / AECFG [1]	$V_{DD_AEMIF1_18_33}$	IPU/IPD disabled by default	Input	Async EMIF: Address Bus bit[09] GIO: GIO[74] AECFG[1]: See Section 3.2, *Device Boot Modes* and Table 3-14, *AECFG (Async EMIF Configuration)* for system usage of these pins.
EM_A8 / GIO73 / AECFG[0]	T19	I/O/Z	AEMIF / GIO / AECFG [0]	$V_{DD_AEMIF1_18_33}$	IPU/IPD disabled by default	Input	Async EMIF: Address Bus bit[08] GIO: GIO[73] AECFG[0]: See Section 3.2, *Device Boot Modes* and Table 3-14, *AECFG (Async EMIF Configuration)* for system usage of these pins.
EM_A7 / GIO72 / KEYA3	T17	I/O/Z	AEMIF / GIO / KEYSCAN	$V_{DD_AEMIF1_18_33}$		Input	Async EMIF: Address Bus bit[07] GIO: GIO[72] Keyscan: A3
EM_A6 / GIO71 / KEYA2	R18	I/O/Z	AEMIF / GIO / KEYSCAN	$V_{DD_AEMIF1_18_33}$		Input	Async EMIF: Address Bus bit[06] GIO: GIO[71] Keyscan: A2
EM_A5 / GIO70 / KEYA1	R16	I/O/Z	AEMIF / GIO / KEYSCAN	$V_{DD_AEMIF1_18_33}$		Input	Async EMIF: Address Bus bit[05] GIO: GIO[70] Keyscan: A1
EM_A4 / GIO69 / KEYA0	R19	I/O/Z	AEMIF / GIO/KEYSCAN	$V_{DD_AEMIF1_18_33}$		Input	Async EMIF: Address Bus bit[04] GIO: GIO[69] Keyscan: A0
EM_A3 / GIO68 / KEYB3	R15	I/O/Z	AEMIF / GIO/ KEYSCAN	$V_{DD_AEMIF1_18_33}$		Input	Async EMIF: Address Bus bit[03] GIO: GIO[68] Keyscan: B3

Copyright © 2009–2011, Texas Instruments Incorporated

Table 2-5. Pin Descriptions (continued)

Name	BGA ID	Type (1)	Group	Power Supply (2)	IPU IPD (3)	Reset State	Description (4)
EM_A2 / HCNTLA	M18	I/O/Z	AEMIF/ HPI	$V_{DD_AEMIF2_18_33}$		Output	Async EMIF: Address Bus bit[02] HPI: The state of HCNTLA and HCNTLB determines if address, data, or control information is being transmitted between an external host and the device. **Note**: HPI is pin multiplexed with Asynchronous EMIF at the output pin. HPI is available only when boot mode selected is HPI boot mode. In this configuration, the device will always act as a slave.
EM_A1 / HHWIL	M19	I/O/Z	AEMIF/ HPI	$V_{DD_AEMIF2_18_33}$		Output	Async EMIF: Address Bus bit[01] HPI: This pin is half-word identification input HHWIL. **Note**: HPI is pin multiplexed with Asynchronous EMIF at the output pin. HPI is available only when boot mode selected is HPI boot mode. In this configuration, the device will always act as a slave.
EM_A0 / GIO67 / KEYB2 / HCNTLB	L17	I/O/Z	AEMIF / GIO / KEYSCAN / HPI	$V_{DD_AEMIF2_18_33}$		Input	Async EMIF: Address Bus bit[00] Note that the EM_A0 is always a 32-bit address GIO: GIO[56] Keyscan: B2 HPI: The state of HCNTLA and HCNTLB determines if address, data, or control information is being transmitted between an external host and the device. **Note**: HPI is pin multiplexed with Asynchronous EMIF at the output pin. HPI is available only when boot mode selected is HPI boot mode. In this configuration, the device will always act as a slave.
EM_BA1 / GIO66 / KEYB1 / HINTN	R17	I/O/Z	AEMIF / GIO / KEYSCAN / HPI	$V_{DD_AEMIF1_18_33}$		Input	Async EMIF: Bank Address 1 signal = 16-bit address. In 16-bit mode, lowest address bit. In 8-bit mode, second lowest address bit GIO: GIO[66] Keyscan: B1 HPI: This pin is host interrupt output $\overline{HINT}$ **Note**: HPI is pin multiplexed with Asynchronous EMIF at the output pin. HPI is available only when boot mode selected is HPI boot mode. In this configuration, the device will always act as a slave.
EM_BA0 / EM_A14 / GIO65 / KEYB0	P17	I/O/Z	AEMIF / GIO / KEYSCAN	$V_{DD_AEMIF1_18_33}$		Input	Async EMIF: Bank Address 0 signal = 8-bit address. In 8-bit mode, lowest address bit. Async EMIF: Address line (bit[14] when using 16-bit memories. GIO: GIO[65] Keyscan: B0
EM_D15 / GIO64 / HD15	P18	I/O/Z	AEMIF / GIO / HPI	$V_{DD_AEMIF1_18_33}$		Input	Async EMIF: Data Bus bit[15] GIO: GIO[64] HPI: Data bus bit [15] **Note**: HPI is pin multiplexed with Asynchronous EMIF at the output pin. HPI is available only when boot mode selected is HPI boot mode. In this configuration, the device will always act as a slave.

Table 2-5. Pin Descriptions (continued)

Name	BGA ID	Type (1)	Group	Power Supply (2)	IPU IPD (3)	Reset State	Description (4)
EM_D14 / GIO63 / HD14	P16	I/O/Z	AEMIF / GIO / HPI	$V_{DD_AEMIF1_18_33}$		Input	Async EMIF: Data Bus bit[14] GIO: GIO[63] HPI: Data bus bit [14] **Note**: HPI is pin multiplexed with Asynchronous EMIF at the output pin. HPI is available only when boot mode selected is HPI boot mode. In this configuration, the device will always act as a slave.
EM_D13 / GIO62 / HD13	P19	I/O/Z	AEMIF / GIO / HPI	$V_{DD_AEMIF1_18_33}$		Input	Async EMIF: Data Bus bit[13] GIO: GIO[62] HPI: Data bus bit [13] **Note**: HPI is pin multiplexed with Asynchronous EMIF at the output pin. HPI is available only when boot mode selected is HPI boot mode. In this configuration, the device will always act as a slave.
EM_D12 / GIO61 / HD12	P15	I/O/Z	AEMIF / GIO / HPI	$V_{DD_AEMIF1_18_33}$		Input	Async EMIF: Data Bus bit[12] GIO: GIO[61] HPI: Data bus bit [12] **Note**: HPI is pin multiplexed with Asynchronous EMIF at the output pin. HPI is available only when boot mode selected is HPI boot mode. In this configuration, the device will always act as a slave.
EM_D11 / GIO60 / HD11	N16	I/O/Z	AEMIF / GIO / HPI	$V_{DD_AEMIF1_18_33}$		Input	Async EMIF: Data Bus bit[11] GIO: GIO[60] HPI: Data bus bit [11] **Note**: HPI is pin multiplexed with Asynchronous EMIF at the output pin. HPI is available only when boot mode selected is HPI boot mode. In this configuration, the device will always act as a slave.
EM_D10 / GIO59 / HD10	N18	I/O/Z	AEMIF / GIO / HPI	$V_{DD_AEMIF1_18_33}$		Input	Async EMIF: Data Bus bit[10] GIO: GIO[59] HPI: Data bus bit [10] **Note**: HPI is pin multiplexed with Asynchronous EMIF at the output pin. HPI is available only when boot mode selected is HPI boot mode. In this configuration, the device will always act as a slave.
EM_D9 / GIO58 / HD9	N19	I/O/Z	AEMIF / GIO / HPI	$V_{DD_AEMIF1_18_33}$		Input	Async EMIF: Data Bus bit[09] GIO: GIO[58] HPI: Data bus bit [9] **Note**: HPI is pin multiplexed with Asynchronous EMIF at the output pin. HPI is available only when boot mode selected is HPI boot mode. In this configuration, the device will always act as a slave.
EM_D8 / GIO57 / HD8	N15	I/O/Z	AEMIF / GIO / HPI	$V_{DD_AEMIF1_18_33}$		Input	Async EMIF: Data Bus bit[08] GIO: GIO[57]

Copyright © 2009–2011, Texas Instruments Incorporated

Table 2-5. Pin Descriptions (continued)

Name	BGA ID	Type (1)	Group	Power Supply (2)	IPU IPD (3)	Reset State	Description (4)
							HPI: Data bus bit [8] **Note**: HPI is pin multiplexed with Asynchronous EMIF at the output pin. HPI is available only when boot mode selected is HPI boot mode. In this configuration, the device will always act as a slave.
EM_D7 / HD7	L16	I/O/Z	AEMIF / HPI	$V_{DD_AEMIF2_18_33}$		Input	Async EMIF: Data Bus bit[07] HPI: Data bus bit [7] **Note**: HPI is pin multiplexed with Asynchronous EMIF at the output pin. HPI is available only when boot mode selected is HPI boot mode. In this configuration, the device will always act as a slave.
EM_D6 / HD6	L18	I/O/Z	AEMIF / HPI	$V_{DD_AEMIF2_18_33}$		Input	Async EMIF: Data Bus bit[06] HPI: Data bus bit [6] **Note**: HPI is pin multiplexed with Asynchronous EMIF at the output pin. HPI is available only when boot mode selected is HPI boot mode. In this configuration, the device will always act as a slave.
EM_D5 / HD5	L19	I/O/Z	AEMIF / HPI	$V_{DD_AEMIF2_18_33}$		Input	Async EMIF: Data Bus bit[05] HPI: Data bus bit [5] **Note**: HPI is pin multiplexed with Asynchronous EMIF at the output pin. HPI is available only when boot mode selected is HPI boot mode. In this configuration, the device will always act as a slave.
EM_D4 / HD4	L15	I/O/Z	AEMIF / HPI	$V_{DD_AEMIF2_18_33}$		Input	Async EMIF: Data Bus bit[04] HPI: Data bus bit [4] **Note**: HPI is pin multiplexed with Asynchronous EMIF at the output pin. HPI is available only when boot mode selected is HPI boot mode. In this configuration, the device will always act as a slave.
EM_D3 / HD3	K15	I/O/Z	AEMIF / HPI	$V_{DD_AEMIF2_18_33}$		Input	Async EMIF: Data Bus bit[03] HPI: Data bus bit [3] **Note**: HPI is pin multiplexed with Asynchronous EMIF at the output pin. HPI is available only when boot mode selected is HPI boot mode. In this configuration, the device will always act as a slave.
EM_D2 / HD2	K19	I/O/Z	AEMIF / HPI	$V_{DD_AEMIF2_18_33}$		Input	Async EMIF: Data Bus bit[02] HPI: Data bus bit [2] **Note**: HPI is pin multiplexed with Asynchronous EMIF at the output pin. HPI is available only when boot mode selected is HPI boot mode. In this configuration, the device will always act as a slave.
EM_D1 / HD1	K16	I/O/Z	AEMIF / HPI	$V_{DD_AEMIF2_18_33}$		Input	Async EMIF: Data Bus bit[01] HPI: Data bus bit [1] **Note**: HPI is pin multiplexed with Asynchronous EMIF at the output pin. HPI is available only when boot mode selected is HPI boot mode. In this configuration, the device will always act as a slave.
EM_D0 / HD0	K18	I/O/Z	AEMIF / HPI	$V_{DD_AEMIF2_18_33}$		Input	Async EMIF: Data Bus bit[00] HPI: Data bus bit [0] **Note**: HPI is pin multiplexed with Asynchronous EMIF at the output pin. HPI is available only when boot mode selected is HPI boot mode. In this configuration, the device will always act as a slave.

Copyright © 2009–2011, Texas Instruments Incorporated

Table 2-5. Pin Descriptions (continued)

Name	BGA ID	Type (1)	Group	Power Supply (2)	IPU IPD (3)	Reset State	Description (4)
$\overline{\text{EM_CE[0]}}$ / GIO56 / $\overline{\text{HCS}}$	M17	I/O/Z	AEMIF / GIO / HPI	$V_{DD_AEMIF1_18_33}$		Output	Async EMIF: Lowest numbered Chip Select. Can be programmed to be used for standard asynchronous memories (example:flash), OneNand or NAND memory. Used for the default boot and ROM boot modes. GIO: GIO[56] HPI: this pin is HPI chip select input. **Note**: HPI is pin multiplexed with Asynchronous EMIF at the output pin. HPI is available only when boot mode selected is HPI boot mode. In this configuration, the device will always act as a slave.
$\overline{\text{EM_CE[1]}}$ / GIO55 / $\overline{\text{HAS}}$	J17	I/O/Z	AEMIF / GIO / HPI	$V_{DD_AEMIF2_18_33}$		Output	Async EMIF: Second Chip Select., Can be programmed to be used for standard asynchronous memories (example: flash), OneNand or NAND memory. GIO: GIO[55] HPI: This pin is host address strobe. **Note**: HPI is pin multiplexed with Asynchronous EMIF at the output pin. HPI is available only when boot mode selected is HPI boot mode. In this configuration, the device will always act as a slave.
$\overline{\text{EM_WE}}$ / GIO54 / $\overline{\text{HDS2}}$	J15	I/O/Z	AEMIF / GIO / HPI	$V_{DD_AEMIF2_18_33}$		Output	Async EMIF: Write Enable GIO: GIO[54] HPI: This pin is host data strobe input 2. **Note**: HPI is pin multiplexed with Asynchronous EMIF at the output pin. HPI is available only when boot mode selected is HPI boot mode. In this configuration, the device will always act as a slave.
$\overline{\text{EM_OE}}$ / GIO53 / $\overline{\text{HDS1}}$	J19	I/O/Z	AEMIF / GIO / HPI	$V_{DD_AEMIF2_18_33}$		Output	Async EMIF: Output Enable GIO: GIO[53] HPI: This pin is host data strobe input 1.
EM_WAIT / GIO52 / $\overline{\text{HRDY}}$	J18	I/O/Z	AEMIF / GIO / HPI	$V_{DD_AEMIF2_18_33}$	IPU	Input	Async EMIF: Async WAIT GIO: GIO[52] HPI: This pin is host ready output from DSP to host.
EM_ADV / GIO51 / HR/$\overline{\text{W}}$	M16	I/O/Z	AEMIF / GIO / HPI	$V_{DD_AEMIF1_18_33}$		Output	Async EMIF: Address Valid Detect for OneNAND interface GIO: GIO[51] HPI: This pin is host read or write select input.
EM_CLK / GIO50	M15	I/O/Z	AEMIF / GIO	$V_{DD_AEMIF1_18_33}$		Output	Async EMIF: Clock signal for OneNAND flash interface GIO: GIO[50]
GIO49 / McBSP_DX	D5	I/O/Z	GIO / McBSP	V_{DDS33}	IPD	Input	GIO: GIO[49] McBSP: Transmit Data
GIO48 / McBSP_CLKX	A5	I/O/Z	GIO / McBSP	V_{DDS33}	IPD	Input	GIO: GIO[48] McBSP: Transmit Clock

Copyright © 2009–2011, Texas Instruments Incorporated

Table 2-5. Pin Descriptions (continued)

Name	BGA ID	Type (1)	Group	Power Supply (2)	IPU IPD (3)	Reset State	Description (4)
GIO47 / McBSP_FSX	C6	I/O/Z	GIO / McBSP	V_{DDS33}	IPD	Input	GIO: GIO[47] McBSP: Transmit Frame Sync
GIO46 / McBSP_DR	E6	I/O/Z	GIO / McBSP	V_{DDS33}	IPD	Input	GIO: GIO[46] McBSP: Receive Data
GIO45 / McBSP_CLKR	B6	I/O/Z	GIO / McBSP	V_{DDS33}	IPD	Input	GIO: GIO[45] McBSP: Receive Clock
GIO44 / McBSP_FSR	E7	I/O/Z	GIO / McBSP	V_{DDS33}	IPD	Input	GIO: GIO[44] McBSP: Receive Frame Sync
GIO43 / MMCSD1_CLK / EM_A20	T6	I/O/Z	GIO / MMCSD1 / AEMIF	V_{DDS33}	IPD	Input	GIO: GIO[43] MMCSD1: Clock Async EMIF: Address bit[20]
GIO42 / MMCSD1_CMD / EM_A19	R6	I/O/Z	GIO / MMCSD1 / AEMIF	V_{DDS33}	IPD	Input	GIO: GIO[42] MMCSD1: Command Async EMIF: Address bit[19]
GIO41 / MMCSD1_DATA3 / EM_A18	W5	I/O/Z	GIO / MMCSD / AEMIF	V_{DDS33}	IPD	Input	GIO: GIO[41] MMCSD1: DATA3 Async EMIF: Address bit[18]
GIO40 / MMCSD1_DATA2 / EM_A17	U5	I/O/Z	GIO / MMCSD1 / AEMIF	V_{DDS33}	IPD	Input	GIO: GIO[40] MMCSD1: DATA2 Async EMIF: Address bit[17]
GIO39 / MMCSD1_DATA1 / EM_A16	R5	I/O/Z	GIO / MMCSD1 / AEMIF	V_{DDS33}	IPD	Input	GIO: GIO[39] MMCSD1: DATA1 Async EMIF: Address bit[16]
GIO38 / MMCSD1_DATA0 / EM_A15	V5	I/O/Z	GIO / MMCSD1 / AEMIF	V_{DDS33}	IPD	Input	GIO: GIO[38] MMCSD1: DATA0 Async EMIF: Address bit[15]
GIO37 / $\overline{\text{SPI4_SCS[0]}}$/ McBSP_CLKS / CLKOUT0	T5	I/O/Z	GIO / SPI4 / McBSP / CLKOUT	V_{DDS33}	IPD	Input	GIO: GIO[37] SPI4: SPI4 Chip Select 0

Table 2-5. Pin Descriptions (continued)

Name	BGA ID	Type (1)	Group	Power Supply (2)	IPU IPD (3)	Reset State	Description (4)
							McBSP: CLKS pin to source an external clock CLKOUT: Output Clock 0
GIO36 / SPI4_SCLK / EM_A21 / EM_A14	W4	I/O/Z	GIO / SPI4 / AEMIF	V_{DDS33}	IPD	Input	GIO: GIO[36] SPI4: Clock Async EMIF: Address bit[21] Async EMIF: Address bit[14]
GIO35 / SPI4_SOMI / SPI4_SCS[1] / CLKOUT1	W3	I/O/Z	GIO / SPI4 /CLKOUT	V_{DDS33}	IPD	Input	GIO: GIO[35] SPI4: Slave Out Master In data SPI4: SPI4 Chip Select 1 CLKOUT: Output Clock 1
GIO34 / SPI4_SIMO / SPI4_SOMI / UART1_RXD	V4	I/O/Z	GIO / SPI4 / UART1	V_{DDS33}	IPD	Input	GIO: GIO[34] SPI4: Slave In Master Out data SPI4: Slave Out Master In data. UART1: RXD
GIO33 / SPI2_SCS[0] / USBDRVVBUS / R1	V3	I/O/Z	GIO / SPI2 / USB /VENC	V_{DDS33}	IPD	Input	GIO: GIO[33] SPI3: SPI3 Chip Select 0 USB: USB: Digital output to control external 5 V supply VENC: Red output data bit 1
GIO32 / SPI2_SCLK / R0	W2	I/O/Z	GIO / SPI2 / VENC	V_{DDS33}	IPD	Input	GIO: GIO[32] SPI2: Clock VENC: Red output data bit 0
GIO31 / SPI2_SOMI / SPI2_SCS[1] / CLKOUT2	U4	I/O/Z	GIO / SPI2 / CLKOUT	V_{DDS33}	IPD	Input	GIO: GIO[31] SPI2: Slave Out Master In data SPI2: SPI2 Chip Select 1 CLKOUT: Output Clock 2
GIO30 / SPI2_SIMO / G1	T4	I/O/Z	GIO / SPI2 / VENC	V_{DDS33}	IPD	Input	GIO: GIO[30] SPI2: Slave In Master Out data VENC: Green output data bit 1
GIO29 / SPI1_SCS[0] / G0	U2	I/O/Z	GIO / SPI1 / VENC	V_{DDS33}	IPD	Input	GIO: GIO[29] SPI1: SPI1 Chip Select 0 VENC: Green output data bit 0

Copyright © 2009–2011, Texas Instruments Incorporated

Table 2-5. Pin Descriptions (continued)

Name	BGA ID	Type (1)	Group	Power Supply (2)	IPU IPD (3)	Reset State	Description (4)
GIO28 / SPI1_SCLK / B1	V1	I/O/Z	GIO / SPI1 / VENC	V_{DDS33}	IPD	Input	GIO: GIO[28] SPI1: Clock VENC: Blue output data bit 1
GIO27 / SPI1_SOMI / SPI1_SCS[1] / B0	T2	I/O/Z	GIO / SPI1 / VENC	V_{DDS33}	IPD	Input	GIO: GIO[27] SPI1: Slave Out Master In data SPI1: SPI1 Chip Select 1 VENC: Blue output data bit 1
GIO26 / SPI1_SIMO	U1	I/O/Z	GIO / SPI1	V_{DDS33}	IPD	Input	GIO: GIO[26] SPI1: Slave In Master Out data
GIO25 / SPI0_SCS[0] / PWM1 / UART1_TXD	T1	I/O/Z	GIO / SPI0 / PWM1 / UART1	V_{DDS33}	IPD	Input	GIO: GIO[25] SPI0: SPI0 Chip Select 0 PWM1: Output UART1: Transmit data
GIO24 / SPI0_SCLK	T3	I/O/Z	GIO / SPI0	V_{DDS33}	IPD	Input	GIO: GIO[24] SPI0: Clock
GIO23 / SPI0_SOMI / SPI0_SCS[1] / PWM0	V2	I/O/Z	GIO / SPI0 / PWM0	V_{DDS33}	IPD	Input	GIO: GIO[23] SPI0: Slave Out Master In data SPI0: SPI0 Chip Select 1 PWM0: Output
GIO22 / SPI0_SIMO	R2	I/O/Z	GIO / SPI0	V_{DDS33}	IPD	Input	GIO: GIO[22] SPI0: Slave In Master Out data
GIO21 / UART1_RTS / I2C_SDA	F3	I/O/Z	GIO / UART1 / I2C	V_{DDS33}	IPD	Input	GIO: GIO[21] UART1: RTS I2C: Serial Data
GIO20 / UART1_CTS / I2C_SCL	F1	I/O/Z	GIO / UART1 / I2C	V_{DDS33}	IPD	Input	GIO: GIO[20] UART1: CTS I2C: Serial Clock
GIO19 / UART0_RXD	E3	I/O/Z	GIO / UART0	V_{DDS33}	IPD	Input	GIO: GIO[19] UART0: Receive data
GIO18 / UART0_TXD	E2	I/O/Z	GIO / UART0	V_{DDS33}	IPD	Input	GIO: GIO[18] UART0: Transmit data
GIO17 / EMAC_TX_EN / UART1_RXD	E4	I/O/Z	GIO / EMAC / UART1	V_{DDS33}	IPD	Input	GIO: GIO[17]

Copyright © 2009–2011, Texas Instruments Incorporated

Table 2-5. Pin Descriptions (continued)

Name	BGA ID	Type (1)	Group	Power Supply (2)	IPU IPD (3)	Reset State	Description (4)
							EMAC: Transmit enable output UART1: Receive Data
GIO16 / EMAC_TX_CLK / UART1_TXD	E1	I/O/Z	GIO / EMAC / UART1	V_{DDS33}	IPD	Input	GIO: GIO[16] EMAC: Transmit clock UART1: Transmit Data
GIO15 / EMAC_COL	D2	I/O/Z	GIO / EMAC	V_{DDS33}	IPD	Input	GIO: GIO[15] EMAC: Collision Detect input
GIO14 / EMAC_TXD3	D1	I/O/Z	GIO / EMAC	V_{DDS33}	IPD	Input	GIO: GIO[14] EMAC: Transmit Data 3 output
GIO13 / EMAC_TXD2	D3	I/O/Z	GIO / EMAC	V_{DDS33}	IPD	Input	GIO: GIO[13] EMAC: Transmit Data 2 output
GIO12 / EMAC_TXD1	C1	I/O/Z	GIO / EMAC	V_{DDS33}	IPD	Input	GIO: GIO[12] EMAC: Transmit Data 1 output
GIO11 / EMAC_TXD0	B1	I/O/Z	GIO / EMAC	V_{DDS33}	IPD	Input	GIO: GIO[11] EMAC: Transmit Data 0 output
GIO10 / EMAC_RXD3	B2	I/O/Z	GIO / EMAC	V_{DDS33}	IPD	Input	GIO: GIO[10] EMAC: Receive Data 3 output
GIO9 / EMAC_RXD2	C2	I/O/Z	GIO / EMAC	V_{DDS33}	IPD	Input	GIO: GIO[09] EMAC: Receive Data 2 output
GIO8 / EMAC_RXD1	A2	I/O/Z	GIO / EMAC	V_{DDS33}	IPD	Input	GIO: GIO[08] EMAC: Receive Data 1 output
GIO7 / EMAC_RXD0	A3	I/O/Z	GIO / EMAC	V_{DDS33}	IPD	Input	GIO: GIO[07] EMAC: Receive Data 0 output
GIO6 / EMAC_RX_CLK	B3	I/O/Z	GIO / EMAC	V_{DDS33}	IPD	Input	GIO: GIO[06] EMAC: Receive clock
GIO5 / EMAC_RX_DV	B4	I/O/Z	GIO / EMAC	V_{DDS33}	IPD	Input	GIO: GIO[05] EMAC: Receive data valid input
GIO4 / EMAC_RX_ER	A4	I/O/Z	GIO / EMAC	V_{DDS33}	IPD	Input	GIO: GIO[04] EMAC: Receive error input
GIO3 / EMAC_CRS	C5	I/O/Z	GIO / EMAC	V_{DDS33}	IPD	Input	GIO: GIO[03] EMAC: Carrier sense input
GIO2 / MDIO	C4	I/O/Z	GIO / EMAC	V_{DDS33}	IPD	Input	GIO: GIO[02] EMAC: Management Data I/O
GIO1 / MDCLK	D6	I/O/Z	GIO / EMAC	V_{DDS33}	IPD	Input	GIO: GIO[01] EMAC: Management Data clock output

Copyright © 2009–2011, Texas Instruments Incorporated

Table 2-5. Pin Descriptions (continued)

Name	BGA ID	Type (1)	Group	Power Supply (2)	IPU IPD (3)	Reset State	Description (4)
GIO0	B5	I/O/Z	GIO	V_{DDS33}	IPD	Input	GIO: GIO[00]
USB_DP	N1	A I/O	USBPHY	V_{DDA33_USB}			USB D+ (differential signal pair) **Note**: If the USB peripheral is not used at all in the application, this pin should be connected to 3.3V .
USB_DM	P1	A I/O	USBPHY	V_{DDA33_USB}			USB D- (differential signal pair) **Note**: If the USB peripheral is not used at all in the application, this pin should be connected to V_{SS}.
V_{DDA33_USB}	P4	PWR					3.3-V USB analog power supply **Note**: If the USB peripheral is not used at all in the application, this pin should be connected to 3.3V.
V_{SSA33_USB}	P3	GND					3.3-V USB ground **Note**: If the USB peripheral is not used at all in the application, this pin should be connected to V_{SS}.
$V_{DDA12LDO_USB}$	M5	PWR				Output	For proper device operation, even if the USB peripheral is not used, a 0.22µF capacitor must be connected as close as possible to the package, and the capacitor mst be connected to V_{SSA}.
V_{DDA18_USB}	N5	PWR					1.8-V USB analog power supply **Note**: If the USB peripheral is not used at all in the application, this pin should be connected to 1.8V.
V_{SSA18_USB}	P2	GND					1.8-V USB ground **Note**: If the USB peripheral is not used at all in the application, this pin should be connected to V_{SS}.
USB_ID	M1	A I	USBPHY	V_{DDA33_USB}			USB operating mode identification pin. For device mode operation only, pull up this pin to V_{DD} with a 1.5K ohm resistor. For host mode operation only, pull down this pin to ground (V_{SS}) with a 1.5K ohm resistor. If using an OTG or mini-USB connector, this pin will be set properly via the cable/connector configuration. **Note**: If the USB peripheral is not used at all in the application, this pin should be connected to 3.3V.
USB_VBUS	N2	A I/O	USBPHY	USB_VBUS			This pin is used by the USB Controller to detect a presence of 5V power (4.4V is the threshold) on the USB_VBUS line for normal operation. This power is sourced by the USB Component that is assuming the role of a Host. In other words, the power on the USB_VBUS line is not sourced by the Device. From DM365 perspective, when operating as a Host, it ensures that the external power supply that the DM365 has sourced is within the required voltage level (>= 4.4V) and when DM365 is operating as a Device, the presence of a 5V power on the VBUS Line is used to signify the presence of an external Host. **Note 1:** When the DM365 is operating as a Device, it uses the power on the USB_VBUS line to power up its internal pull-up resistor on the D+ line. **Note2:** If the USB peripheral is not used at all in the application, this pin should be connected to V_{SS}.
MMCSD0_CLK	J16	O	MMCSD0	V_{DDS33}		out	MMCSD0: Clock
MMCSD0_CMD	H15	I/O/Z	MMCSD0	V_{DDS33}		Input	MMCSD0: Command
MMCSD0_DATA3	H16	I/O/Z	MMCSD0	V_{DDS33}		Input	MMCSD0: DATA3

Copyright © 2009–2011, Texas Instruments Incorporated

Table 2-5. Pin Descriptions (continued)

Name	BGA ID	Type (1)	Group	Power Supply (2)	IPU IPD (3)	Reset State	Description (4)
MMCSD0_DATA2	H17	I/O/Z	MMCSD0	V_{DDS33}		Input	MMCSD0: DATA2
MMCSD0_DATA1	H19	I/O/Z	MMCSD0	V_{DDS33}		Input	MMCSD0: DATA1
MMCSD0_DATA0	H18	I/O/Z	MMCSD0	V_{DDS33}		Input	MMCSD0: DATA0
MICIP	B8	AI	VCODEC	V_{DDA33_VC} or V_{DDA18_VC}			MIC positive input **Note**: If the Voice Codec peripheral is not used, this pin **must** be tied directly to V_{SS} for proper device operation.
MICIN	C8	AI	VCODEC	V_{DDA33_VC} or V_{DDA18_VC}			MIC negative input **Note**: If the Voice Codec peripheral is not used, this pin **must** be tied directly to V_{SS} for proper device operation.
LINEO	C9	AO	VCODEC	V_{DDA33_VC} or V_{DDA18_VC}			Line driver output **Note**: If the Voice Codec peripheral is not used, this pin can be left open or can be connected directly to V_{ss} for proper device operation.
SPP	B9	AO	VCODEC	V_{DDA33_VC} or V_{DDA18_VC}			Speaker amplifier positive output **Note**: If the Voice Codec peripheral is not used, this pin can be left open or can be connected directly to V_{ss} for proper device operation.
SPN	A9	AO	VCODEC	V_{DDA33_VC} or V_{DDA18_VC}			Speaker amplifier negative output **Note**: If the Voice Codec peripheral is not used, this pin can be left open or can be connected directly to V_{ss} for proper device operation.
VCOM	A8	AO	VCODEC	V_{DDA33_VC} or V_{DDA18_VC}			Analog block common voltage. It is recommended that a 10µF capacitor be connected between this pin and ground to provide clean voltage. **Note**: If the Voice Codec peripheral is not used, this pin **must** be tied directly to V_{SS} for proper device operation.
V_{DDA18_VC}	E9	PWR					1.8-V Voice Codec module analog power supply **Note**: If the Voice Codec peripheral is not used, this pin **must** be tied directly to V_{SS} for proper device operation.
V_{SSA18_VC}	F9	GND					1.8-V Voice Codec module ground **Note**: If the Voice Codec peripheral is not used, this pin **must** be tied directly to V_{SS} for proper device operation.
V_{DDA33_VC}	E10	PWR					3.3-V Voice Codec module power supply **Note**: If the Voice Codec peripheral is not used, this pin **must** be tied directly to V_{SS} for proper device operation.
V_{SSA33_VC}	D9	GND					3.3-V Voice Codec module ground **Note**: If the Voice Codec peripheral is not used, this pin **must** be tied directly to V_{SS} for proper device operation.

Copyright © 2009–2011, Texas Instruments Incorporated

Table 2-5. Pin Descriptions (continued)

Name	BGA ID	Type (1)	Group	Power Supply (2)	IPU IPD (3)	Reset State	Description (4)
ADC_CH0	E8	AI	ADC	V_{DDA18_ADC}			Analog-to-Digital converter channel 0 **Note**: If the ADC is not used, it is recommended to either leave this pin open, as no connect, or tie this pin along with the other ADC_CHs together to a single resistor to ground.
ADC_CH1	B7	AI	ADC	V_{DDA18_ADC}			Analog-to-Digital converter channel 1 **Note**: If the ADC is not used, it is recommended to either leave this pin open, as no connect, or tie this pin along with the other ADC_CHs together to a single resistor to ground.
ADC_CH2	A7	AI	ADC	V_{DDA18_ADC}			Analog-to-Digital converter channel **Note**: If the ADC is not used, it is recommended to either leave this pin open, as no connect, or tie this pin along with the other ADC_CHs together to a single resistor to ground.
ADC_CH3	D8	AI	ADC	V_{DDA18_ADC}			Analog-to-Digital converter channel 3 **Note**: If the ADC is not used, it is recommended to either leave this pin open, as no connect, or tie this pin along with the other ADC_CHs together to a single resistor to ground.
ADC_CH4	D7	AI	ADC	V_{DDA18_ADC}			Analog-to-Digital converter channel 4 **Note**: If the ADC is not used, it is recommended to either leave this pin open, as no connect, or tie this pin along with the other ADC_CHs together to a single resistor to ground.
ADC_CH5	A6	AI	ADC	V_{DDA18_ADC}			Analog-to-Digital converter channel 5 **Note**: If the ADC is not used, it is recommended to either leave this pin open, as no connect, or tie this pin along with the other ADC_CHs together to a single resistor to ground.
V_{DDA18_ADC}	G9	PWR					1.8- V Analog-to-Digital converter analog power supply **Note**: If the ADC is not used at all in an application, this pin can be directly connected to the 1.8-V supply without any filtering or to ground.
V_{SSA_ADC}	F8	GND					1.8- V Analog-to-Digital converter ground
PWCTRIO0	J3	I/O/Z	PRTCSS	V_{DD18_PRTCSS}		Input	PRTCSS: General Input / Output Signal 0 For more pin termination details, see Section 6.7, *Power Management and Real Time Clock Subsystem (PRTCSS)*.
PWCTRIO1	J2	I/O/Z	PRTCSS	V_{DD18_PRTCSS}		Input	PRTCSS: General Input / Output Signal 1 For more pin termination details, see Section 6.7, *Power Management and Real Time Clock Subsystem (PRTCSS)*.
PWCTRIO2	J1	I/O/Z	PRTCSS	V_{DD18_PRTCSS}		Input	PRTCSS: General Input / Output Signal 2 For more pin termination details, see Section 6.7, *Power Management and Real Time Clock Subsystem (PRTCSS)*.
PWCTRIO3	J5	I/O/Z	PRTCSS	V_{DD18_PRTCSS}		Input	PRTCSS: General Input / Output Signal 3 For more pin termination details, see Section 6.7, *Power Management and Real Time Clock Subsystem (PRTCSS)*.
PWCTRIO4	J4	I/O/Z	PRTCSS	V_{DD18_PRTCSS}		Input	PRTCSS: General Input / Output Signal 4 For more pin termination details, see Section 6.7, *Power Management and Real Time Clock Subsystem (PRTCSS)*.

Copyright © 2009–2011, Texas Instruments Incorporated

Table 2-5. Pin Descriptions (continued)

Name	BGA ID	Type (1)	Group	Power Supply (2)	IPU IPD (3)	Reset State	Description (4)
PWCTRIO5	K5	I/O/Z	PRTCSS	V_{DD18_PRTCSS}		Input	PRTCSS: General Input / Output Signal 5 For more pin termination details, see Section 6.7, *Power Management and Real Time Clock Subsystem (PRTCSS)*.
PWCTRIO6	K4	I/O/Z	PRTCSS	V_{DD18_PRTCSS}		Input	PRTCSS: General Input / Output Signal 6 For more pin termination details, see Section 6.7, *Power Management and Real Time Clock Subsystem (PRTCSS)*.
PWCTRO0	K2	O	PRTCSS	V_{DD18_PRTCSS}		Output	PRTCSS: General Output Signal 0 For more pin termination details, see Section 6.7, *Power Management and Real Time Clock Subsystem (PRTCSS)*.
PWCTRO1	L5	O	PRTCSS	V_{DD18_PRTCSS}		Output	PRTCSS: General Output Signal 1 For more pin termination details, see Section 6.7, *Power Management and Real Time Clock Subsystem (PRTCSS)*.
PWCTRO2	L4	I/O/Z	PRTCSS	V_{DD18_PRTCSS}		Output	PRTCSS: General Output Signal 2 For more pin termination details, see Section 6.7, *Power Management and Real Time Clock Subsystem (PRTCSS)*.
PWCTRO3	L3	O	PRTCSS	V_{DD18_PRTCSS}		Output	PRTCSS: General Output Signal 3 For more pin termination details, see Section 6.7, *Power Management and Real Time Clock Subsystem (PRTCSS)*.
RTCXI	G1	I	PRTCSS	V_{DD12_PRTCSS}		Input	PRTCSS: Crystal Input for PRTCSS oscillator ***Note***: If the RTC calendar is not used, this pin should be pulled down. For more pin termination details, see Section 6.7, *Power Management and Real Time Clock Subsystem (PRTCSS)*.
RTCXO	H1	O	PRTCSS	V_{DD12_PRTCSS}		Output	PRTCSS: Crystal Output for PRTCSS oscillator ***Note***: If the RTC calendar is not used, this pin should be left unconnected. For more pin termination details, see Section 6.7, *Power Management and Real Time Clock Subsystem (PRTCSS)*.
PWRST	M3	I	PRTCSS	V_{DD12_PRTCSS}		Input	PRTCSS: Reset signal for PRTCSS For more pin termination details, see Section 6.7, *Power Management and Real Time Clock Subsystem (PRTCSS)*.
PWRCNTON	M2	I	PRTCSS	V_{DD12_PRTCSS}		Input	PRTCSS: Reset pin for system power sequencing For more pin details, see Section 6.7.
$\overline{\text{RESET}}$	H3	I		V_{DDS33}		Input	Global chip reset
MXI1	L1	I	CLOCKS	V_{DDMXI}		Input	Crystal input for system oscillator **Note**: If an external oscillator is to be used, the external oscillator clock signal should be connected to the MXI1 pin with a 1.8V amplitude. The MXO1 should be left unconnected and the VSS_MX1 signal should be connected to board ground (V_{SS}).
MXO1	K1	O	CLOCKS	V_{DDMXI}		Output	Output for system oscillator **Note**: If an external oscillator is to be used, the external oscillator clock signal should be connected to the MXI1 pin with a 1.8V amplitude. The MXO1 should be left unconnected and the VSS_MX1 signal should be connected to board ground (V_{SS}).
TCK	F4	I	EMULATION	V_{DDS33}	IPU	Input	JTAG test clock input
TDI	F5	I	EMULATION	V_{DDS33}	IPU	Input	JTAG test data input
TDO	G4	O	EMULATION	V_{DDS33}		Output	JTAG test data output

Copyright © 2009–2011, Texas Instruments Incorporated

Table 2-5. Pin Descriptions (continued)

Name	BGA ID	Type (1)	Group	Power Supply (2)	IPU IPD (3)	Reset State	Description (4)
TMS	G2	I	EMULATION	V_{DDS33}	IPU	Input	JTAG test mode select
$\overline{TRST}$	H5	I	EMULATION	V_{DDS33}	IPD	Input	JTAG test logic reset
RTCK	F2	O	EMULATION	V_{DDS33}		Output	JTAG test clock output
EMU0	G5	I/O	EMULATION	V_{DDS33}	IPU	Input	JTAG emulation 0 I/O
EMU1	H4	I/O	EMULATION	V_{DDS33}	IPU	Input	JTAG emulation 1 I/O EMU[1:0] = 00 - Force Debug Scan chain (ARM and ARM ETB TAPs connected) EMU[1:0] = 11 - Normal Scan chain (ICEpick only)
RSV2	R4	I					For proper device operation, this pin must be tied to ground.
RSV1	R1	O					For proper device operation, this pin must be left unconnected.
RSV0	A1	O					For proper device operation, this pin must be left unconnected.
CV_{DD}	G6	PWR					Core power (1.2-V or 1.35-V).
	G8						
	H7						
	H8						
	H12						
	J8						
	J12						
	J14						
	K8						
	K12						
	L13						
	M6						
	M10						
	M12						
	M13						
V_{DD12_PRTCSS}	J6	PWR					Power supply for RTC oscillator, PRTCSS, and PRTCSS I/O (1.2-V or 1.35-V).
	K7						
V_{DDA18_PLL}	N4	PWR					Analog power for PLL (1.8 V).
V_{DDRAM}	D4	O				Output	For proper device operation, this pin must be connected to a 1.0uF (6.2V) capacitor, and the other end of the capacitor must be connected to V_{SS}. **Note:** this pin is an internal power supply pin and should not be connected to any external power supply."
V_{DDS18}	G14	PWR					Power supply for 1.8-V I/O.
	H11						
	H14						
	J7						
	M14						
	P7						
V_{DD18_PRTCSS}	K6	PWR					Power supply for PRTCSS (1.8 V).
V_{DDMXI}	L6	PWR					Power supply for PLL oscillator (1.8 V).

Copyright © 2009–2011, Texas Instruments Incorporated

Table 2-5. Pin Descriptions (continued)

Name	BGA ID	Type (1)	Group	Power Supply (2)	IPU IPD (3)	Reset State	Description (4)
V_{DD18_SLDO}	E5	PWR					Power supply for internal RAM. For proper device operation, this pin must always be connected to V_{DDS18}.
V_{DD18_DDR}	N9	PWR					Power supply for DDR (1.8 V).
	N11						
	P9						
	P10						
	P12						
	R12						
V_{DDS33}	F10	PWR					Power supply for 3.3-V I/O.
	F6						
	F7						
	H6						
	H13						
	L12						
	N6						
	P5						
	P6						
$V_{DD_AEMIF1_18_33}$	P14	PWR					Power supply for switchable AEMIF (3.3/1.8 V). $V_{DD_AEMIF1_18_33}$: can be used as a power supply for EM_A[3:13], EM_BA0, EM_BA1, EM_CE[0], EM_ADV, EM_CLK, EM_D[8:15] or as GPIO pins. See AEMIF pin descriptions. $V_{DD_AEMIF2_18_33}$: can be used as a power supply for EM_A[0:2], EM_CE[1], EM_WE, EM_OE, EM_WAIT, EM_D[0:7] pins, HPI, or GPIO pins. See AEMIF pin descriptions. **Example 1**: $V_{DD_AEMIF2_18_33}$ at 1.8-V for 8-bit NAND $V_{DD_AEMIF1_18_33}$ at 3.3-V for GPIO. **Example 2**: $V_{DD_AEMIF1_18_33}$ and $V_{DD_AEMIF2_18_33}$ at 1.8-V for 16-bit NAND.
	R14						
$V_{DD_AEMIF2_18_33}$	K14	PWR					
	L14						
$V_{DD_ISIF18_33}$	F12	PWR					Power supply for switchable ISIF (3.3/1.8 V). **Example 1** $V_{DD_ISIF_18_33}$ power supply can be at 1.8V for VPFE pin functionality or it can be at 3.3V if other peripherals pin functionality is to be used like SPI3 or GPIO or CLKOUT0, or USBDRVVBUS.
	F13	PWR					
V_{PP}	R3	PWR					For proper device operation, this pin must always be connected to CV_{DD}.

Copyright © 2009–2011, Texas Instruments Incorporated

Table 2-5. Pin Descriptions (continued)

Name	BGA ID	Type (1)	Group	Power Supply (2)	IPU IPD (3)	Reset State	Description (4)
V_{SS}	A19	GND					Digital ground
	E14						
	F14						
	G11						
	G12						
	H9						
	H10						
	J9						
	J10						
	J11						
	J13						
	K9						
	K10						
	K11						
	L7						
	L8						
	L9						
	L10						
	L11						
	M7						
	M8						
	M9						
	M11						
	N8						
	N12						
	N14						
	P8						
	P13						
	W1						
	W19						
V_{SS_MX1}	L2	GND					System oscillator - ground **Note**: Note: If an external oscillator is used, this pin must be connected to board ground (V_{SS}).
V_{SS_32K}	H2	GND					PRTCSS oscillator - ground
V_{SSA}	M4	GND					Analog ground

2.9 Device Support

2.9.1 Development Tools

TI offers an extensive line of development tools for device systems, including tools to evaluate the performance of the processors, generate code, develop algorithm implementations, and fully integrate and debug software and hardware modules. The tools support documentation is electronically available within the Code Composer Studio™ Integrated Development Environment (IDE).

The following products support development of device based applications:

Software Development Tools:

Code Composer Studio™ Integrated Development Environment (IDE): including Editor

C/C++/Assembly Code Generation, and Debug plus additional development tools

Hardware Development Tools:

Extended Development System (XDS™) Emulator (supports TMS320DM365 DMSoC multiprocessor system debug) EVM (Evaluation Module)

For a complete listing of development-support tools for the TMS320DM365 DMSoC platform, visit the Texas Instruments web site on the Worldwide Web at www.ti.com. For information on pricing and availability, contact the nearest TI field sales office or authorized distributor.

2.9.2 Device Nomenclature

To designate the stages in the product development cycle, TI assigns prefixes to the part numbers of all DSP devices and support tools. Each DSP commercial family member has one of three prefixes: TMX, TMP, or TMS (e.g.,). Texas Instruments recommends two of three possible prefix designators for its support tools: TMDX and TMDS. These prefixes represent evolutionary stages of product development from engineering prototypes (TMX/TMDX) through fully qualified production devices/tools (TMS/TMDS).

Device development evolutionary flow:

TMX Experimental device that is not necessarily representative of the final device's electrical specifications.

TMP Final silicon die that conforms to the device's electrical specifications but has not completed quality and reliability verification.

TMS Fully-qualified production device.

Support tool development evolutionary flow:

TMDX Development-support product that has not yet completed Texas Instruments internal qualification testing.

TMDS Fully qualified development-support product.

TMX and TMP devices and TMDX development-support tools are shipped against the following disclaimer:

"Developmental product is intended for internal evaluation purposes."

TMS devices and TMDS development-support tools have been characterized fully, and the quality and reliability of the device have been demonstrated fully. TI's standard warranty applies.

Predictions show that prototype devices (TMX or TMP) have a greater failure rate than the standard production devices. Texas Instruments recommends that these devices not be used in any production system because their expected end-use failure rate is undefined. Only qualified production devices are to be used in production.

Copyright © 2009–2011, Texas Instruments Incorporated

TI device nomenclature also includes a suffix with the device family name. This suffix indicates the package type (for example, ZCE), the temperature range (for example, "Blank" is the commercial temperature range), and the device speed range in megahertz (for example, 202 is 202.5 MHz). The following figure provides a legend for reading the complete device name for any TMS320DM365 DMSoC platform member.

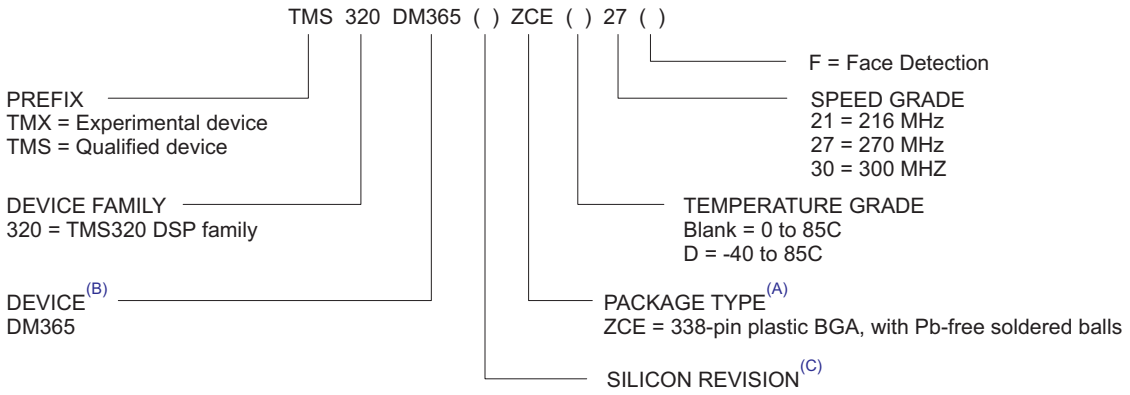

A. BGA = Ball Grid Array.
B. For actual device part numbers (P/Ns) and ordering information, contact your nearest TI Sales Representative.
C. For more information on silicon revision, see the *TMS320DM365 Silicon Errata* (literature number SPRZ294).

Figure 2-6. Device Nomenclature

2.9.3 Related Documentation From Texas Instruments

The following documents describe the TMS320DM36x Digital Media System-on-Chip (DMSoC). Copies of these documents are available on the internet at www.ti.com.

SPRZ294 ***TMS320DM365 DMSoC Silicon Errata*** Describes the known exceptions to the functional specifications for the TMS320DM365 DMSoC.

SPRUFG5 ***TMS320DM36x Digital Media System-on-Chip (DMSoC) ARM Subsystem Users Guide***. This document describes the ARM Subsystem in the TMS320DM36x Digital Media System-on-Chip (DMSoC). The ARM subsystem is designed to give the ARM926EJ-S (ARM9) master control of the device. In general, the ARM is responsible for configuration and control of the device; including the components of the ARM Subsystem, the peripherals, and the external memories.

SPRUFG8 ***TMS320DM36x Digital Media System-on-Chip (DMSoC) Video Processing Front End (VPFE) Users Guide***. This document describes the Video Processing Front End (VPFE) in the TMS320DM36x Digital Media System-on-Chip (DMSoC).

SPRUFG9 ***TMS320DM36x Digital Media System-on-Chip (DMSoC) Video Processing Back End (VPBE) Users Guide***. This document describes the Video Processing Back End (VPBE) in the TMS320DM36x Digital Media System-on-Chip (DMSoC).

SPRUFH0 ***TMS320DM36x Digital Media System-on-Chip (DMSoC) 64-bit Timer Users Guide***. This document describes the operation of the software-programmable 64-bit timers in the TMS320DM36x Digital Media System-on-Chip (DMSoC).

SPRUFH1 ***TMS320DM36x Digital Media System-on-Chip (DMSoC) Serial Peripheral Interface (SPI) Users Guide***. This document describes the serial peripheral interface (SPI) in the TMS320DM36x Digital Media System-on-Chip (DMSoC). The SPI is a high-speed synchronous serial input/output port that allows a serial bit stream of programmed length (1 to 16 bits) to be shifted into and out of the device at a programmed bit-transfer rate. The SPI is normally used for communication between the DMSoC and external peripherals. Typical applications include an interface to external I/O or peripheral expansion via devices such as

Copyright © 2009–2011, Texas Instruments Incorporated

shift registers, display drivers, SPI EPROMs and analog-to-digital converters.

SPRUFH2 ***TMS320DM36x Digital Media System-on-Chip (DMSoC) Universal Asynchronous Receiver/Transmitter (UART) Users Guide.*** This document describes the universal asynchronous receiver/transmitter (UART) peripheral in the TMS320DM36x Digital Media System-on-Chip (DMSoC). The UART peripheral performs serial-to-parallel conversion on data received from a peripheral device, and parallel-to-serial conversion on data received from the CPU.

SPRUFH3 ***TMS320DM36x Digital Media System-on-Chip (DMSoC) Inter-Integrated Circuit (I2C) Peripheral Users Guide***. This document describes the inter-integrated circuit (I2C) peripheral in the TMS320DM36x Digital Media System-on-Chip (DMSoC). The I2C peripheral provides an interface between the DMSoC and other devices compliant with the I2C-bus specification and connected by way of an I2C-bus.

SPRUFH5 ***TMS320DM36x Digital Media System-on-Chip (DMSoC) Multimedia Card (MMC)/Secure Digital (SD) Card Controller Users Guide***. This document describes the multimedia card (MMC)/secure digital (SD) card controller in the TMS320DM36x Digital Media System-on-Chip (DMSoC).

SPRUFH6 ***TMS320DM36x Digital Media System-on-Chip (DMSoC) Pulse-Width Modulator (PWM) Users Guide.*** This document describes the pulse-width modulator (PWM) peripheral in the TMS320DM36x Digital Media System-on-Chip (DMSoC).

SPRUFH7 ***TMS320DM36x Digital Media System-on-Chip (DMSoC) Real-Time Out (RTO) Controller Users Guide***. This document describes the Real Time Out (RTO) controller in the TMS320DM36x Digital Media System-on-Chip (DMSoC).

SPRUFH8 ***TMS320DM36x Digital Media System-on-Chip (DMSoC) General-Purpose Input/Output (GPIO) Users Guide***. This document describes the general-purpose input/output (GPIO) peripheral in the TMS320DM36x Digital Media System-on-Chip (DMSoC). The GPIO peripheral provides dedicated general-purpose pins that can be configured as either inputs or outputs.

SPRUFH9 ***TMS320DM36x Digital Media System-on-Chip (DMSoC) Universal Serial Bus (USB) Controller Users Guide.*** This document describes the universal serial bus (USB) controller in the TMS320DM36x Digital Media System-on-Chip (DMSoC). The USB controller supports data throughput rates up to 480 Mbps. It provides a mechanism for data transfer between USB devices and also supports host negotiation.

SPRUFI0 ***TMS320DM36x Digital Media System-on-Chip (DMSoC) Enhanced Direct Memory Access (EDMA) Controller Users Guide***. This document describes the operation of the enhanced direct memory access (EDMA3) controller in the TMS320DM36x Digital Media System-on-Chip (DMSoC). The EDMA controller's primary purpose is to service user-programmed data transfers between two memory-mapped slave endpoints on the DMSoC.

SPRUFI1 ***TMS320DM36x Digital Media System-on-Chip (DMSoC) Asynchronous External Memory Interface (EMIF) Users Guide***. This document describes the asynchronous external memory interface (EMIF) in the TMS320DM36x Digital Media System-on-Chip (DMSoC). The EMIF supports a glueless interface to a variety of external devices.

SPRUFI2 ***TMS320DM36x Digital Media System-on-Chip (DMSoC) DDR2/Mobile DDR (DDR2/mDDR) Memory Controller Users Guide***. This document describes the DDR2/mDDR memory controller in the TMS320DM36x Digital Media System-on-Chip (DMSoC). The DDR2/mDDR memory controller is used to interface with JESD79D-2A standard compliant DDR2 SDRAM and mobile DDR devices.

SPRUFI3 ***TMS320DM36x Digital Media System-on-Chip (DMSoC) Multibuffered Serial Port Interface (McBSP) User's Guide***. This document describes the operation of the

 Copyright © 2009–2011, Texas Instruments Incorporated

multibuffered serial host port interface in the TMS320DM36x Digital Media System-on-Chip (DMSoC). The primary audio modes that are supported by the McBSP are the AC97 and IIS modes. In addition to the primary audio modes, the McBSP supports general serial port receive and transmit operation.

SPRUFI4 ***TMS320DM36x Digital Media System-on-Chip (DMSoC) Universal Host Port Interface (UHPI) User's Guide.*** This document describes the operation of the universal host port interface in the TMS320DM36x Digital Media System-on-Chip (DMSoC).

SPRUFI5 ***TMS320DM36x Digital Media System-on-Chip (DMSoC) Ethernet Media Access Controller (EMAC) User's Guide***. This document describes the operation of the ethernet media access controllerface in the TMS320DM36x Digital Media System-on-Chip (DMSoC).

SPRUFI7 ***TMS320DM36x Digital Media System-on-Chip (DMSoC) Analog to Digital Converter (ADC) User's Guide***. This document describes the operation of the analog to digital conversion in the TMS320DM36x Digital Media System-on-Chip (DMSoC).

SPRUFI8 ***TMS320DM36x Digital Media System-on-Chip (DMSoC) Key Scan User's Guide.*** This document describes the key scan peripheral in the TMS320DM36x Digital Media System-on-Chip (DMSoC).

SPRUFI9 ***TMS320DM36x Digital Media System-on-Chip (DMSoC) Voice Codec User's Guide***. This document describes the voice codec peripheral in the TMS320DM36x Digital Media System-on-Chip (DMSoC). This module can access ADC/DAC data with internal FIFO (Read FIFO/Write FIFO). The CPU communicates to the voice codec module using 32-bit-wide control registers accessible via the internal peripheral bus.

SPRUFJ0 ***TMS320DM36x Digital Media System-on-Chip (DMSoC) Power Management and Real-Time Clock Subsystem (PRTCSS) User's Guide.*** This document provides a functional description of the Power Management and Real-Time Clock Subsystem (PRTCSS) in the TMS320DM36x Digital Media System-on-Chip (DMSoC) and PRTC interface (PRTCIF).

Copyright © 2009–2011, Texas Instruments Incorporated

3 Device Configurations

This section provides a detailed overview of the device.

3.1 System Module Registers

The system module includes status and control registers for configuration of the device. Brief descriptions of the various registers are shown in Table 3-1. For more information on the System Module registers, see the *TMS320DM36x DMSoC ARM Subsystem* Reference Guide (literature number SPRUFG5).

Table 3-1. System Module Register Memory Map

HEX ADDRESS	REGISTER ACRONYM	DESCRIPTION(1)
0x01C4 0000	PINMUX0	Pin Mux 0 (Video In) Pin Mux Register
0x01C4 0004	PINMUX1	Pin Mux 1 (Video Out) Pin Mux Register
0x01C4 0008	PINMUX2	Pin Mux 2 (AEMIF) Pin Mux Register
0x01C4 000C	PINMUX3	Pin Mux 3 (GIO/Misc) Pin Mux Register
0x01C4 0010	PINMUX4	Pin Mux 4 (Misc) Pin Mux Register
0x01C4 0014	BOOTCFG	Boot Configuration
0x01C4 0018	ARM_INTMUX	Multiplexing Control for Interrupts
0x01C4 001C	EDMA_EVTMUX	Multiplexing Control for EDMA Events
0x01C4 0020	DDR_SLEW	DDR Slew Rate
0x01C4 0024	UHPICTL	UHPI Control
0x01C4 0028	DEVICE_ID	Device ID
0x01C4 002C	VDAC_CONFIG	Video DAC Configuration
0x01C4 0030	TIMER64_CTL	Timer64 Input Control
0x01C4 0034	USB_PHY_CTL	USB PHY Control
0x01C4 0038	MISC	Miscellaneous Control
0x01C4 003C	MSTPRI0	Master Priorities Register 0
0x01C4 0040	MSTPRI1	Master Priorities Register 1
0x01C4 0044	VPSS_CLK_CTL	VPSS Clock Mux Control
0x01C4 0048	PERI_CLKCTL	Peripheral Clock Control
0x01C4 004C	DEEPSLEEP	DEEPSLEEP Control
0x01C4 0050	-	Reserved
0x01C4 0054	DEBOUNCE0	Debounce for GIO0 Input
0x01C4 0058	DEBOUNCE1	Debounce for GIO1 Input
0x01C4 005C	DEBOUNCE2	Debounce for GIO2 Input
0x01C4 0060	DEBOUNCE3	Debounce for GIO3 Input
0x01C4 0064	DEBOUNCE4	Debounce for GIO4 Input
0x01C4 0068	DEBOUNCE5	Debounce for GIO5 Input
0x01C4 006C	DEBOUNCE6	Debounce for GIO6 Input
0x01C4 0070	DEBOUNCE7	Debounce for GIO7 Input
0x01C4 0074	VTPIOCR	VTP IO Control
0x01C4 0078	PUPDCTL0	IO cell pullup/down on/off control #0
0x01C4 007C	PUPDCTL1	IO cell pullup/down on/off control #1
0x01C4 0080	HDVICPBT	HDVICP Boot Register
0x01C4 0084	PLL1_CONFIG	PLL1 Configuration Register
0x01C4 0088	PLL2_CONFIG	PLL2 Configuration Register

(1) For more details on the system module registers, see the *TMS320DM36x DMSoC ARM Subsystem* Reference Guide (literature number SPRUFG5).

Copyright © 2009–2011, Texas Instruments Incorporated

3.2 Boot Modes

The ARM can boot from either Asynchronous EMIF (OneNand/NOR) or from ARM ROM, as determined by the setting of the device configuration pins BTSEL[2:0]. The boot selection pins (BTSEL[2:0]) determine the ARM boot process. After reset (POR, warm reset, or max reset), ARM program execution begins in ARM ROM at 0x0000: 8000, except when BTSEL[2:0] = 001, indicating AEMIF (OneNand/NOR) flash boot.

3.2.1 Boot Modes Overview

The ARM ROM boot loader (RBL) executes when the BTSEL[2:0] pins indicate a condition other than the normal ARM EMIF boot.

- If BTSEL[2:0] = 001 - Asynchronous EMIF boot mode (NOR or OneNAND). This mode is handled by hardware control and does not involve the ROM. In the case of OneNAND, the user is responsible for putting any necessary boot code in the OneNAND's boot page. This code shall configure the AEMIF module for the OneNAND device. After the AEMIF module is configured, booting will continue immediately after the OneNAND's boot page with the AEMIF module managing pages thereafter.
- The RBL supports 7 distinct boot modes:
  - BTSEL[2:0] = 000 - NAND Boot mode
  - BTSEL[2:0] = 010 - MMC0/SD0 Boot mode
  - BTSEL[2:0] = 011 - UART0 Boot mode
  - BTSEL[2:0] = 100 - USB Boot mode
  - BTSEL[2:0] = 101 - SPI0 Boot mode
  - BTSEL[2:0] = 110 - EMAC Boot mode
  - BTSEL[2:0] = 111 - HPI Boot mode
- If NAND boot fails, then MMC/SD mode is tried.
- If MMC/SD boot fails, then MMC/SD boot is tried again.
- If UART boot fails, then UART boot is tried again.
- If USB boot fails, then USB boot is tried again.
- If SPI boot fails, then SPI boot is tried again.
- If EMAC boot fails, then EMAC boot is tried again.
- If HPI boot fails, then HPI boot is tried again.
- RBL shall update boot status (PASS/FAIL) in MISC register bits 8 and 9 in System control module.
- ARM ROM Boot - NAND Mode
  - No support for a full firmware boot. Instead, copies a second stage user boot loader (UBL) from NAND flash to ARM internal RAM (AIM) and transfers control to the user-defined UBL.
  - Support for NAND with page sizes up to 4096 bytes.
  - Support for magic number error detection and retry (up to 24 times) when loading UBL
  - Support for up to 30KB UBL (32KB IRAM - ~2KB for RBL stack)
  - Optional, user-selectable, support for use of DMA and I-cache during RBL execution (i.e.,while loading UBL)
  - Supports booting from 8-bit NAND devices (16-bit NAND devices are not supported)
  - Uses/Requires 4-bit HW ECC (NAND devices with ECC requirements ≤ 4 bits per 512 bytes are supported)
  - Supports NAND flash that requires chip select to stay low during the tR read time

Copyright © 2009–2011, Texas Instruments Incorporated

- ARM ROM Boot - MMC/SD Mode
  - No support for a full firmware boot. Instead, copies a second stage User Boot Loader (UBL) from MMC/SD to ARM Internal RAM (AIM) and transfers control to the user software.
  - Support for MMC/SD Native protocol (MMC/SD SPI protocol is not supported)
  - Support for descriptor error detection and retry (up to 24 times) when loading UBL
  - Support for up to 30KB UBL (32KB - ~2KB for RBL stack)
  - SDHC boot supported by RBL
- ARM ROM Boot - UART mode
  - If the state of BTSEL[2:0] pins at reset is 011, then the UART boot mode executes. This mode enables a small program, referred to here as a user boot loader (UBL), to be downloaded to the on-chip ARM internal RAM via the on-chip serial UART and executed. A host program, (referred to as serial host utility program), manages the interaction with RBL and provides a means for operator feedback and input. The UART boot mode execution assumes the following UART settings: 24 MHz reference clock, Time-Out 500 ms, one-shot Serial RS-232 port 115.2 Kbps, 8-bit, no parity, one stop bit Command, data, and checksum format Everything sent from the host to the device UART RBL must be in ASCII format
  - No support for a full firmware boot. Instead, loads a second stage user boot loader (UBL) via UART to ARM internal RAM (AIM) and transfers control to the user software.
  - Support for up to 30KB UBL (32KB - ~2KB for RBL stack)
- ARM ROM Boot – USB Mode
  - No support for a full firmware boot. Instead, loads a second stage User Boot Loader (UBL) via USB to ARM Internal RAM (AIM) and transfers control to the users software.
- ARM ROM Boot – SPI Mode
  - The device will copy UBL to ARM Internal RAM (AIM) via SPI interface from a SPI peripheral like SPI EEPROM. RBL will then transfer control to the UBL.
- ARM ROM Boot – EMAC Mode
  - The device will send a boot request packet and the host/server will respond with the boot packets. RBL will wait for all boot packets to arrive and then transfer control to the UBL which is received via boot packets. In EMAC boot mode an I2C EEPROM or SPI EEPROM is necessary for programming EMAC descriptor (including EMAC address for the device)

    Note: If a magic number is not found in the EEPROM, then the EMAC boot mode will use a default MAC address. In this case, there will be no magic number support.
- ARM ROM Boot – HPI Mode
  - The Host will copy UBL to ARM Internal RAM (AIM) via HPI interface and notify the ROM bootloader after copy is finished. RBL will then transfer control to the UBL.

The general boot sequence is shown in Figure 3-1. For more information, refer to the *TMS320DM36x DMSoC ARM Subsystem* Reference Guide (literature number SPRUFG5).

 Copyright © 2009–2011, Texas Instruments Incorporated

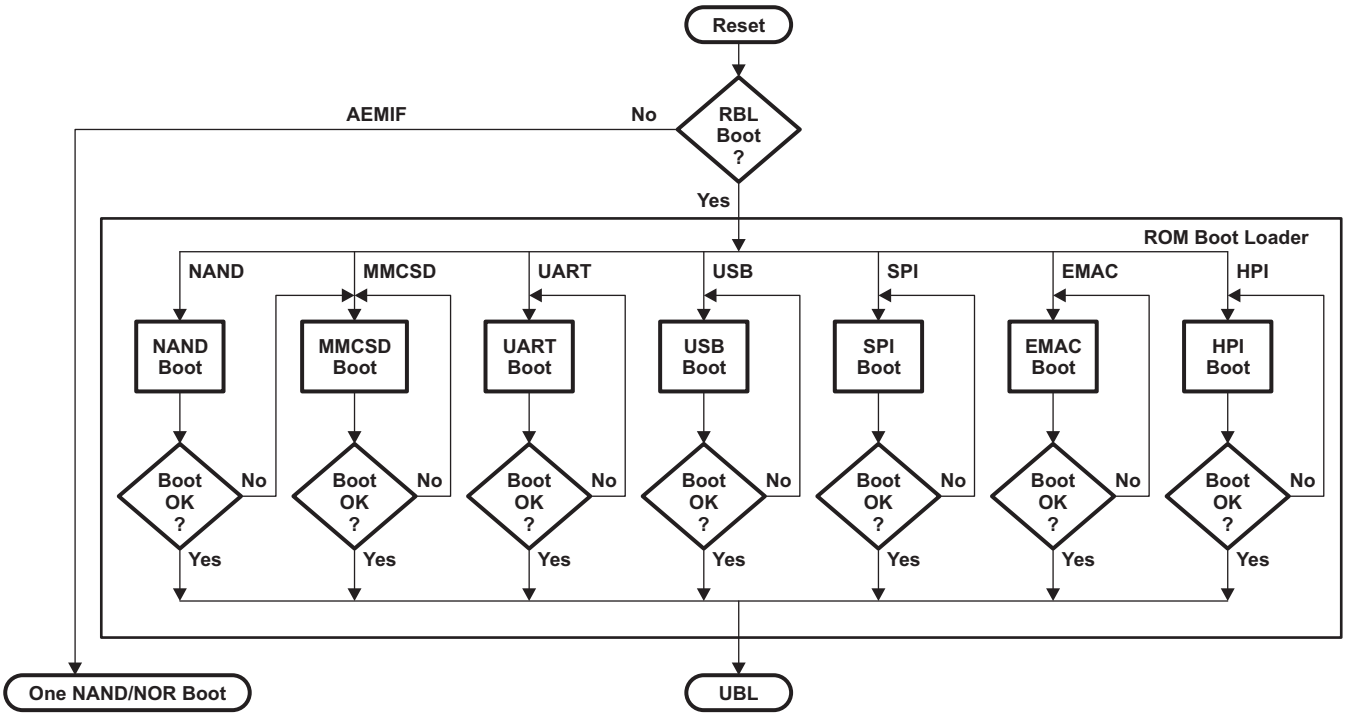

Figure 3-1. Boot Mode Functional Block Diagram

3.3 Device Clocking

3.3.1 Overview

The device requires one primary reference clock. The reference clock frequency may be generated either by crystal input or by external oscillator. The reference clock is the clock at the pins named MXI1/MXO1, and which drives two separate PLL controllers (PLLC1 and PLLC2). PLLC1 generates the clocks required by the ARM, EDMA, VPSS and the rest of the peripherals. PLL2 generates the clock required by the DDR PHY interface and is also capable of providing clocks to the ARM, USB, Video, or Voice Codec modules as well as a flexible clocking option. Figure 3-2 represents the clocking architecture for the ARM subsystem. For more information on device clocking and the system PLL controller please see the *TMS320DM36x DMSoC ARM Subsystem* Reference Guide (literature number SPRUFG5).

Copyright © 2009–2011, Texas Instruments Incorporated

Figure 3-2. Clocking Architecture

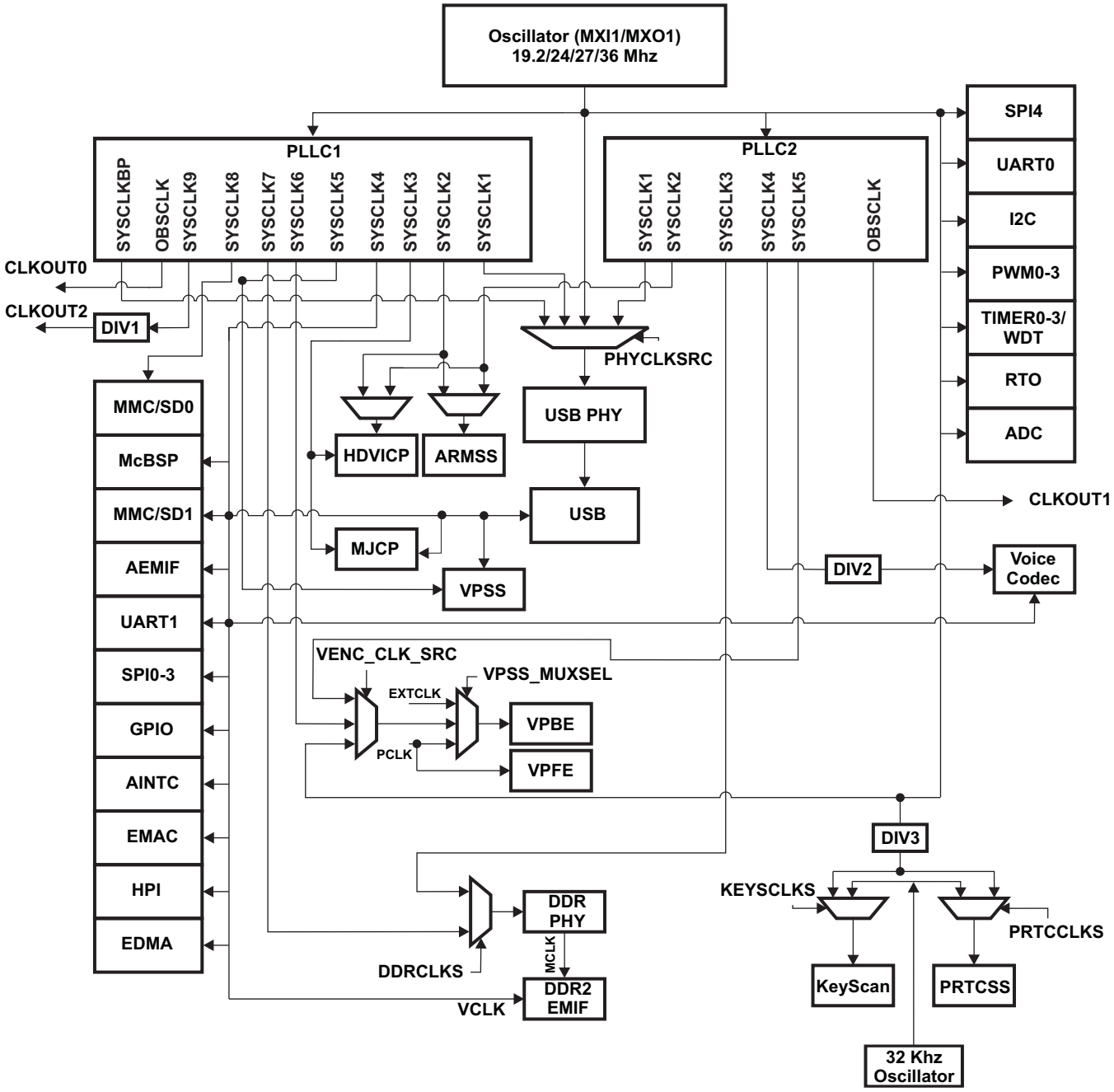

3.3.2 PLL Controller Module

Two PLL controllers provide clocks to different components of the chip. The PLL controller 1 (PLLC1) provides clocks to most of the components of the chip. The PLL controller 2 (PLLC2) provides clocks to the DDR PHY and is also capable of providing clocks to the ARM, USB, VPSS or the Voice Codec modules instead as well.

As a module, the PLL controller provides the following:

- Glitch-free transitions (on changing PLL settings)
- Domain clocks alignment
- Clock gating

- PLL bypass
- PLL power down

The various clock outputs given by the PLL controller are as follows:

- Domain clocks: SYSCLKn
- Bypass domain clock: SYSCLKBP
- Auxiliary clock from reference clock: AUXCLK

Various dividers that can be used are as follows:

- Pre-PLL divider: PREDIV
- Post-PLL divider: POSTDIV
- SYSCLK divider: PLLDIV1, …, PLLDIVn
- SYSCLKBP divider: BPDIV

The Multiplier values supported are handled by:

- PLL multiplier control: PLLM

Notes:

- PLLCxSYSCLKy is used to denote post divide clock output SYSCLKy from PLL controller x
- 'x', which denotes PLL Controller number, can assume values 1 and 2
- 'y', which denotes post divide clock outputs, can assume values 1 to 9 in case of PLLC1 and 1 to 5 in case of PLLC2

The PLL Controllers for PLL1 and PLL2 are described in detail in the *TMS320DM36x ARM Subsystem Reference Guide* (literature number SPRUFG5).

Copyright © 2009–2011, Texas Instruments Incorporated

3.3.3 PLLC1

There are two PLLs on the device, and they are independently controlled. PLLC1 generates the frequencies needed for the ARM, Video Processing Sub System (VPSS), MJCP coprocessor block, EDMA, and peripherals.

The reference clock for both PLLs is the single crystal input. Both PLLs will be of the same type . It should be noted that the USB2.0 PHY contains a third PLL embedded within it. Table 3-2, and Figure 3-3 describe the customization of PLLC1.

- Provides primary system clock
- Software configurable
- Accepts clock input or internal oscillator input
- PLL pre-divider value is programmable
- PLL multiplier value is programmable
- PLL post-divider value is programmable . See the data manual for all supported configurations.
- Only SYSCLK [9:1] are used

Table 3-2. PLLC1 Output Clocks

PLLC1SYSCLKy	Used By	PLLDIV Divider
PLLC1SYSCLK1	USB reference clock(1)	Programmable
PLLC1SYSCLK2	ARM926EJ-S, HDVICP block clock (1)	Programmable
PLLC1SYSCLK3	MJCP and HDVICP bus interface clock	Programmable
PLLC1SYSCLK4	Configuration bus clock, peripheral system interfaces, EDMA	Programmable
PLLC1SYSCLK5	VPSS clock	Programmable
PLLC1SYSCLK6	VENC clock(1)	Programmable
PLLC1SYSCLK7	DDR 2x clock(1)	Programmable
PLLC1SYSCLK8	MMC/SD0 clock	Programmable
PLLC1SYSCLK9	CLKOUT2	Programmable
PLLC1OBSCLK	CLKOUT0	Programmable
PLLC1SYSCLKBP	USB reference clock(1)	Programmable

(1) These clock outputs are multiplexed with other clocks.

Figure 3-3. PLLC1 Configuration

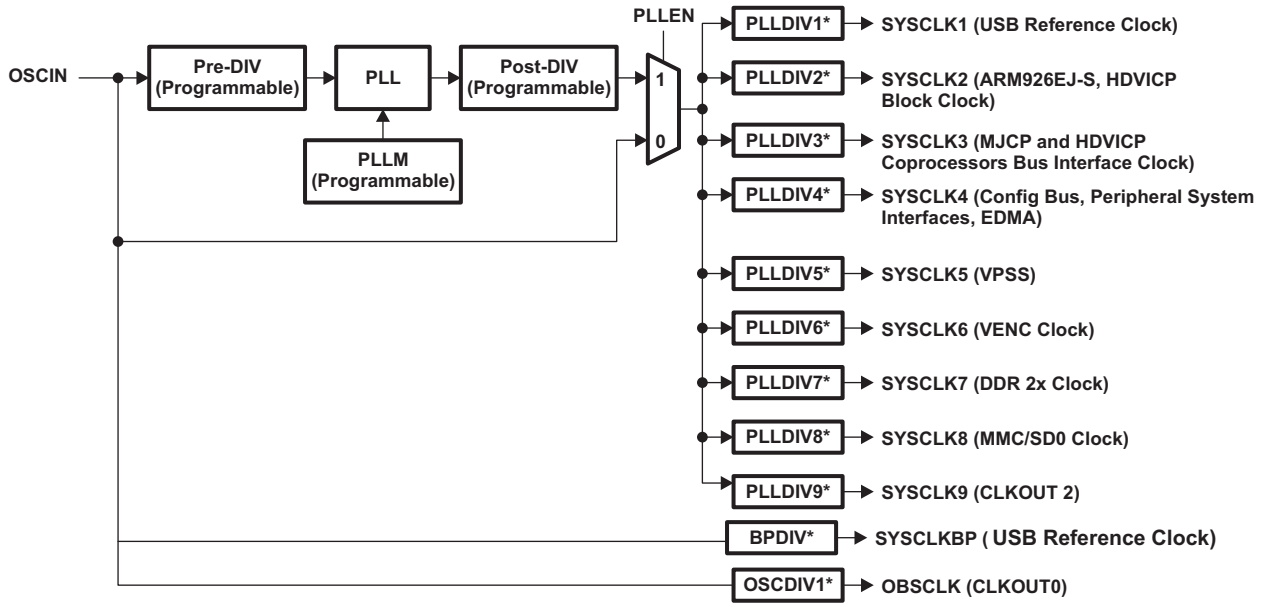

* – Programmable

3.3.4 PLLC2

PLLC2 provides the USB reference clock, ARM926EJ-S, DDR 2x clock, Voice Codec clock and VENC 27MHz, 74.25MHz clock. The PLLC2 functionality can be programmed via the PLLC2 registers. The following list, Table 3-3, and Figure 3-4 describe the customization of PLLC2.

The PLLC2 customization includes the following features:

- PLLC2 provides DDR PHY, USB reference clock , ARM926EJ-S clock, VENC 27MHz, 74.25Hz clock and Voice codec clock
- Software configurable
- Accepts clock input or internal oscillator input (the same input as PLLC1)
- PLL pre-divider value is programmable
- PLL multiplier value is programmable
- PLL post-divider value is programmable
- Only SYSCLK [5:1] are used

Table 3-3. PLLC2 Output Clocks

PLLC2SYSCLKy	Used by	PLLDIV Divider
PLLC2SYSCLK1	USB reference clock (1)	Programmable
PLLC2SYSCLK2	ARM926EJ-S, HDVICP block clock (1)	Programmable
PLLC2SYSCLK3	DDR 2x clock (1)	Programmable
PLLC2SYSCLK4	Voice Codec clock	Programmable
PLLC2SYSCLK5	VENC clock (1)	Programmable
PLLC2OBSCLK	CLKOUT1	Programmable

(1) These clock outputs are multiplexed with other clocks.

Copyright © 2009–2011, Texas Instruments Incorporated

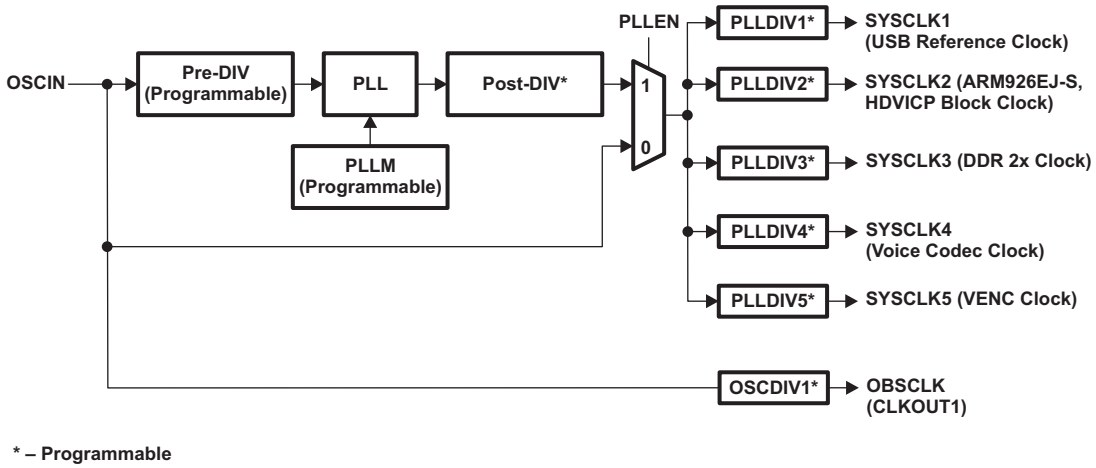

Figure 3-4. PLLC2 Configuration

3.3.5 Processing, Video, EDMA and DDR EMIF Subsystems Maximum Operating Frequencies

Table 3-4 shows the maximum speeds supported for each of the major blocks supported on the different speed grade devices.

Table 3-4. Processing, Video, EDMA and DDR EMIF Subsystems Maximum Operating Frequencies

	DM365 - 216	DM365 - 270	DM365 - 300
ARM926 RISC	216 MHz	270 MHz	300 MHz
Co-Processor (HDVICP)	173 MHz	216 MHz	270 MHz
Co-Processor (MJCP)	173 MHz	216 MHz	270 MHz
DDR2	173 MHz	216 MHz	270 MHz
mDDR	168 MHz	168 MHz	168 MHz
VPSS Logic Block	173 MHz	216 MHz	270 MHz
Peripheral System Bus and EDMA	86.5 MHz	108 MHz	135 MHz
VPBE-VENC	27 MHz	74.25 MHz	74.25 MHz
VPFE (1)	86.5 MHz	108 MHz	120 MHz

(1) The pixel clock (PCLK) of VPFE should meet the following conditions: PCLK <= 120MHz and PCLK < VPSS logic clock/2.

3.3.6 PLL Controller Clocking Configurations Examples

The DM365 uses two PLLs to generate the two fundamental clocks used on the device. These two clocks feed two divider blocks which generate all of the functional clocks used by the peripherals and cores in the DM365. There are some peripheral clocks on the DM365 which are required to operate at a specific frequency by functional specification or convention. These frequencies are detailed in Table 3-5.

Table 3-5. Specific Peripheral Operating Frequencies

Clock	Required Frequency (MHz)	Reason
VENC (standard definition)	27	required to generate a valid NTSC signal
VENC (high definition)	74.25	required to generate a valid ATSC signal
USB	36, 24, or 19.2	required by the USB peripheral to generate a 48 MHz USB clock
Voice Codec	4.096	required to generate a precise 16 kHz audio sample rate

Table 3-6, Table 3-7, , and Table 3-9 show examples of the PLL combinations that can be supported by DM365. Please see the *TMS320DM36x DMSoC ARM Subsystem* Reference Guide (literature number SPRUFG5) for additional details on special peripherals, clocking considerations, and for additional PLL controller configuration details.

Note 1: A 300-MHz configuration is possible using different PLL multiplier/divider combinations. However, an external clock source is required to provide 74.25 MHz for HD display.

Note 2: HD 720p and above display mode resolutions are not supported on ARM 216-MHz clock rate devices.

Note 3: There are example cases where the voice codec sampling frequency is listed as 15.98 kHz or 16.002 kHz. The difference of 0.125% or 0.0125% versus 16 kHz specification should be acceptable for the majority of audio applications. If the DM365 voice codec is required to operate at precisely 16 kHz then the functional clock can be reduced to achieve precisely that sample frequency but the ARM926 and HDVICP will have to run at a reduced rate resulting in lower video performance.

Table 3-6. 24-MHz Input Crystal Example(1) (2)(3)

PLL1		PLL2		ARM	DDR	MJCP	HDVICP	Voice Codec (4)	Video Encoder	
PLL Output (5)(MHz)	(2M/(N+1))	PLL Output (MHz)	(2M/(N+1))						27MHz	74.25MHz
343.58	272/18	409.6	256/15	204.8	171.8	171.8	171.8	1/100	-	-
343.58	272/18	432	18/1	216	171.8	171.8	171.8	-	1/16	-
432	18/1	270	90/8	270	216	216	216	1/66 (15.98 kHz)	1/10	-
486	162/8	594	198/8	297	243	243	243	1/145 (16.002 kHz)	1/22	1/8
540	360/16	594	396/16	297	270	270	270	1/145 (16.002 kHz)	1/20	1/8

(1) M = PLL controller multiplier. N = PLL controller divider.
(2) All shaded frequencies derive from the PLL2 controller.
(3) PLLC1SYSCLK4 (Configuration bus clock, peripheral system interfaces, EDMA) should be half of the PLLC1SYSCLK3 (MJCP and HDVICP bus interface clock).
(4) The Voice Codec divider value is the combination of the PLL controller 2 SYSCLK4 and Peripheral Clock Control Register PLLDIV2 bit setting divider.
(5) PLL Output is calculated by = Oscillator Input * (2M/(N+1)).

Copyright © 2009–2011, Texas Instruments Incorporated

Table 3-7. 36-MHz Input Crystal Example(1)(2)(3)

PLL1		PLL2		ARM	DDR	MJCP	HDVICP	Voice Codec (4)	Video Encoder	
PLL Output (5)(MHz)	(2M/(N+1))	PLL Output (MHz)	(2M/(N+1))						27MHz	74.25MHz
345	230/24	432	12/1	216	172.5	172.5	172.5	-	1/16	-
432	12/1	270	30/4	270	216	216	216	1/66 (15.98kHz)	1/10	-
486	54/4	594	66/4	297	243	243	243	-	1/22	1/8
540	580/29	594	660/30	297	270	270	270	1/145 (16.002 kHz)	1/22	1/8

(1) M = PLL controller multiplier. N = PLL controller divider.
(2) All shaded frequencies derive from the PLL2 controller.
(3) PLLC1SYSCLK4 (Configuration bus clock, peripheral system interfaces, EDMA) should be half of the PLLC1SYSCLK3 (MJCP and HDVICP bus interface clock).
(4) The Voice Codec divider value is the combination of the PLL controller 2 SYSCLK4 and Peripheral Clock Control Register PLLDIV2 bit setting divider.
(5) PLL Output is calculated by = Oscillator Input * (2M/(N+1)).

Table 3-8. 19.2-MHz Input Crystal Example(1)(2)(3)

PLL1		PLL2		ARM	DDR	MJCP	HDVICP	Voice Codec (4)	Video Encoder	
PLL Output(5) (MHz)	(2M/(N+1))	PLL Output (MHz)	(2M/(N+1))						27MHz	74.25MHz
344.064	448/25	430.8	112/5	215.04	172.032	172.032	172.032	1/105	-	-
344.064	448/25	432	90/4	216	172.032	172.032	172.032	-	1/16	-
432	90/4	540	450/16	270	216	216	216	1/132 (15.98 KHz)	1/20	-
486	810/32	594	990/32	297	243	243	243	1/145 (16.002KHz)	1/22	1/8
540	450/16	594	990/32	297	270	270	270	1/145 (16.002 KHz)	1/22	1/8
540	450/16	593.92	464/15	296.96	270	270	270	1/145	1/20	-

(1) M = PLL controller multiplier. N = PLL controller divider.
(2) All shaded frequencies derive from the PLL2 controller.
(3) PLLC1SYSCLK4 (Configuration bus clock, peripheral system interfaces, EDMA) should be half of the PLLC1SYSCLK3 (MJCP and HDVICP bus interface clock).
(4) The Voice Codec divider value is the combination of the PLL controller 2 SYSCLK4 and Peripheral Clock Control Register PLLDIV2 bit setting divider.
(5) PLL Output is calculated by = Oscillator Input * (2M/(N+1)).

Table 3-9. 27-MHz Input Crystal Example(1)(2)(3)

PLL1		PLL2		ARM	DDR	MJCP	HDVICP	Voice Codec (4)	USB	Video Encoder	
PLL Output(5) (MHz)	(2M/(N+1))	PLL Output (MHz)	(2M/(N+1))							27 MHz	74.25 MHz
345.6	64/5	216	8/1	216	172.8	172.8	172.8	-	1/18 (24 MHz)	1/8	-
432	16/1	270	10/1	270	216	216	216	1/66 (15.98 kHz)	1/18 (24MHz)	1/10	-
432	16/1	519.75	154/8	259.875	216	216	216	1/127 (15.98kHz)	1/18 (24MHz)	1/16	1/7
492	164/9	594	22/1	297	246	246	246	1/145 (16.002 kHz)	1/41 (12MHz)	1/22	1/8
540	20/1	594	44/2	297	270	270	270	1/145 (16.002 kHz)	1/45 (12MHz)	1/22	1/8

(1) M = PLL controller multiplier. N = PLL controller divider.
(2) All shaded frequencies derive from the PLL2 controller.
(3) PLLC1SYSCLK4 (Configuration bus clock, peripheral system interfaces, EDMA) should be half of the PLLC1SYSCLK3 (MJCP and HDVICP bus interface clock).
(4) The Voice Codec divider value is the combination of the PLL controller 2 SYSCLK4 and Peripheral Clock Control Register PLLDIV2 bit setting divider.
(5) PLL Output is calculated by = Oscillator Input * (2M/(N+1)).

Copyright © 2009–2011, Texas Instruments Incorporated

3.3.7 Peripheral Clocking Considerations

The device supports several peripherals with special clocking considerations (VPBE, USB, Key Scan, ADC, Voice Codec, MJCP, HDVICP, AUXCLK, DDR2 EMIF). For more detail on these special considerations, see the *Peripheral Clocking Considerations* section of the*TMS320DM36x DMSoC ARM Subsystem* Reference Guide (literature number SPRUFG5).

3.4 Power and Sleep Controller (PSC)

In the device system, the Power and Sleep Controller (PSC) is responsible for managing transitions of system power on/off, clock on/off, and reset. A block diagram of the PSC is shown in Figure 3-5. Many of the operations of the PSC are transparent to software, such as power-on-reset operations. However, the PSC provides you with an interface to control several important clock and reset operations.

The PSC includes the following features:

- Manages chip power-on/off, clock on/off, and resets
- Provides a software interface to:
  - Control module clock ON/OFF
  - Control module resets
- Supports IcePick emulation features: power, clock, and reset

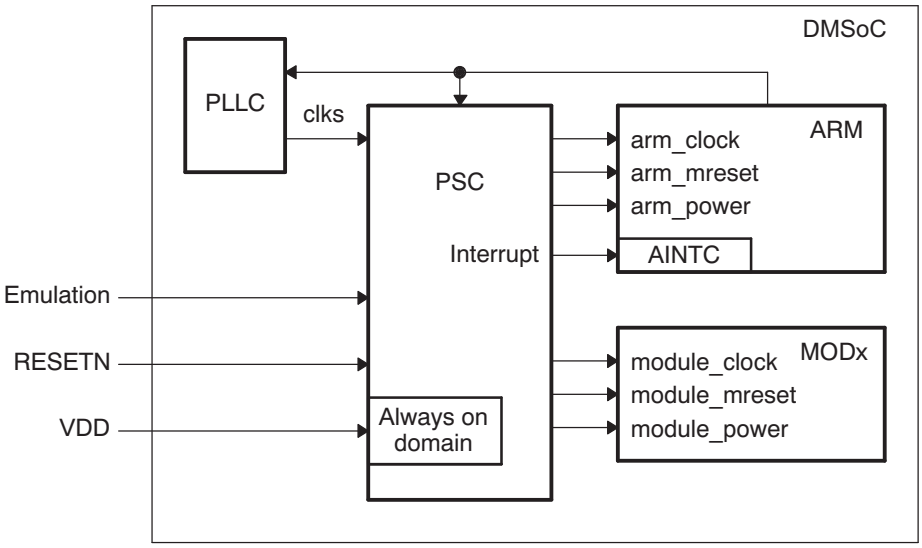

Figure 3-5. Power and Sleep Controller (PSC)

For more information on the PSC, see the *TMS320DM36x DMSoC ARM Subsystem* Reference Guide (literature number SPRUFG5).

Copyright © 2009–2011, Texas Instruments Incorporated

3.5 Pin Multiplexing

The device makes extensive use of pin multiplexing to accommodate the large number of peripheral functions in the smallest possible package. In order to accomplish this, pin multiplexing is controlled using a combination of hardware configuration (at device reset) and software control. No attempt is made by the hardware to ensure that the proper pin muxing has been selected for the peripherals or interface mode being used, thus proper pin muxing configuration is the responsibility of the board and software designers. An overview of the pin multiplexing is shown in Table 3-10.

All pin multiplexing options are configurable by software via pin mux registers that reside in the System Control Module. The PinMux0 Register controls the Video In muxing, PinMux1 register controls Video Out signals, PinMux2 register controls AEMIF signals, PinMux3 registers control the multiplexing of the GIO signals, the PinMux4 register controls the SPI and MMC/SD0 signals. See the *TMS320DM36x DMSoC ARM Subsystem* Reference Guide (literature number SPRUFG5) for complete descriptions of the pin mux registers.

The device configuration pins are multiplexed with AEMIF pins. Note that the AECFG[2:0] inputs only select the default AEMIF address pin muxing. The number of active address pins may be increased or reduced at any time by modifying the appropriate bits in the PinMux2 control register. After the device configuration pins are sampled at reset, they automatically change to function as AEMIF pins. For more details on AEMIF default configuration, see Section 3.7.5.

Table 3-10. Peripheral Pin Mux Overview

Peripheral	Muxed With	Primary Function	Secondary Function	Tertiary Function
VPFE (video in)	GPIO and SPI3	GPIO	VPFE (video in)	SPI3
VPBE (video out)	GPIO, PWM, and RTO	GPIO	VPBE (video out)	PWM & RTO
AEMIF	GPIO	AEMIF	GPIO	
McBSP	GPIO	GPIO	McBSP	
MMC/SD0		MMC/SD0		
MMC/SD1	GPIO and EMIF	GPIO	MMC/SD1	EMIF
CLKOUT	GPIO	GPIO	CLKOUT	
I2C	GPIO	GPIO	I2C	
UART0/UART1	GPIO	GPIO	UART	
SPI0,SPI1,SPI2,SPI4	GPIO	GPIO	SPI	
EMAC	GPIO	GPIO	EXTINT	EMAC
HPI	AEMIF	AEMIF	HPI	

Copyright © 2009–2011, Texas Instruments Incorporated

3.6 Device Reset

There are five types of reset. The types of reset differ by how they are initiated and/or by their effect on the chip. Each type is briefly described in Table 3-11 and further described in the *TMS320DM36x DMSoC ARM Subsystem* Reference Guide (literature number SPRUFG5).

Table 3-11. Reset Types

Type	Initiator	Effect
POR (Power-On-Reset)	$\overline{\text{RESET}}$ pin low and $\overline{\text{TRST}}$ low	Total reset of the chip (cold reset). Activates the POR signal on chip, which is used to reset test/emulation logic.
Warm Reset	$\overline{\text{RESET}}$ pin low	Resets everything except for test/emulation logic. ARM emulator stays alive during Warm reset.
Max Reset	ARM emulator or Watchdog Timer (WDT)	Same effect as warm reset.
System Reset	ARM emulator	A soft reset. Soft reset maintains memory contents, and does not affect or reset clocks or power states.
Module Reset	ARM software	Can independently apply reset to each module, via an MMR. Intended as a debug tool, and not necessarily for general use.

3.7 Default Device Configurations

After POR, warm reset, and max reset, the chip is in its default configuration. This section highlights the default configurations associated with PLLs, clocks, ARM boot mode, and AEMIF.

Note: Default configuration is the configuration immediately after POR, warm reset, and max reset and just before the boot process begins. The boot ROM updates the configuration. See Section 3.2 for more information on the boot process.

3.7.1 Device Configuration Pins

The device configuration pins are described in Table 3-12. The device configuration pins are latched at reset and allow you to configure all of the following options at reset:

- ARM Boot Mode
- Asynchronous EMIF pin configuration

These pins are described further in the following sections.

Note: The device configuration pins are multiplexed with AEMIF pins. After the device configuration pins are sampled at reset, they automatically change to function as AEMIF pins. Pin multiplexing is described in Section 3.5.

Table 3-12. Device Configuration

Device Configuration Input	Function	Sampled Pin	Default Setting (by internal pull-up/ pull-down)
BTSEL[2:0]	Selects ARM boot mode 000 = Boot from ROM (NAND) 001 = Boot from AEMIF 010 = Boot from ROM (MMC/SD) 011 = Boot from ROM (UART) 100 = Boot from ROM (USB) 101 = Boot from ROM (SPI) 110 = Boot from ROM (EMAC) 111 = Boot from ROM (HPI)	EM_A[13:11]	000 (Boot from ROM - NAND)
AECFG[2:0]	AEMIF Configuration(1) AECFG[2] = '0' for 8-bit AEMIF configuration AECFG[2] = '1' for 16-bit AEMIF configuration	EM_A[10:8]	000 (8-bit NAND)

(1) Other supported AECFG[2:0] combinations can be found in Table 3-14.

Copyright © 2009–2011, Texas Instruments Incorporated

Table 3-12. Device Configuration (continued)

Device Configuration Input	Function	Sampled Pin	Default Setting (by internal pull-up/ pull-down)
OSCCFG	Oscillator Configuration OSCCFG = '0' for mode #1 OSCCFG = '1' for mode #2	GIO81	0 (Mode #1)

3.7.2 PLL Configuration

After POR, warm reset, and max reset, the PLLs and clocks are set to their default configurations. The PLLs are in bypass mode and disabled by default. This means that the input reference clock at MXI1 (typically 24 MHz) drives the chip after reset. For more information on device clocking, see Section 3.3 . The default state of the PLLs is reflected in the default state of the register bits in the PLLC registers. Refer to the *TMS320DM36x DMSoC ARM Subsystem* Reference Guide (literature number SPRUFG5).

3.7.3 Power Domain and Module State Configuration

Only a subset of modules are enabled after reset by default. Table 3-13 shows which modules are enabled after reset. Table 3-13 shows that the following modules are enabled depending on the sampled state of the device configuration pins. For example, if UART boot mode is BTSEL[2:0] = 011, then the default state of the UART module is enabled. For more information on module configuration, refer to the *TMS320DM36x DMSoC ARM Subsystem* Reference Guide (literature number SPRUFG5).

Table 3-13. LPSC Assignments and Module Configuration(1)

LPSC/ MODULE NUMBER	MODULE NAME	BTSEL [2:0]							
		000	001	010	011	100	101	110	111
		ROM (NAND)	AEMIF	ROM (MMC/SD0)	ROM (UART0)	ROM (USB)	ROM (SPI0)	ROM (EMAC)	ROM (HPI)
0	EDMA CC	On	On			On		On	
1	EDMA TC0	On	On			On		On	
2	EDMA TC1								
3	EDMA TC2								
4	EDMA TC3								
5	TIMER3								
6	SPI1								
7	MMC_SD1								
8	McBSP								
9	USB					On			
10	PWM3								
11	SPI2								
12	RTO								
13	DDR EMIF								
14	AEMIF	On	On						
15	MMC/SD0			On					
16	Reserved								
17	TIMER4								
18	I2C								
19	UART0				On				
20	UART1								
21	UHPI								On

(1) "(Blank)" in the above table indicates module is disabled.

Copyright © 2009–2011, Texas Instruments Incorporated

Table 3-13. LPSC Assignments and Module Configuration[(1)] (continued)

LPSC/ MODULE NUMBER	MODULE NAME	BTSEL [2:0]							
22	SPI0						On		
23	PWM0								
24	PWM1								
25	PWM2								
26	GPIO								
27	TIMER0	On	On	On	On	On	On	On	On
28	TIMER1								
29	TIMER2	On	On	On	On	On	On	On	On
30	SYSTEM	On	On	On	On	On	On	On	On
31	ARM	On	On	On	On	On	On	On	On
32	Reserved	Reserved	Reserved	Reserved	Reserved	Reserved	Reserved	Reserved	Reserved
33	Reserved	Reserved	Reserved	Reserved	Reserved	Reserved	Reserved	Reserved	Reserved
34	Reserved	On	On	On	On	On	On	On	On
35	EMULATION	On	On	On	On	On	On	On	On
36	Reserved	Reserved	Reserved	Reserved	Reserved	Reserved	Reserved	Reserved	Reserved
37	Reserved	Reserved	Reserved	Reserved	Reserved	Reserved	Reserved	Reserved	Reserved
38	SPI3								
39	SPI4								
40	EMAC							On	
41	RTC	On	On	On	On	On	On	On	On
42	KEYSCAN								
43	ADC								
44	Voice Codec								
45	VDAC CLKREC								
46	VDAC CLK								
47	VPSS MASTER								
48	Reserved	Reserved	Reserved	Reserved	Reserved	Reserved	Reserved	Reserved	Reserved
49	Reserved	Reserved	Reserved	Reserved	Reserved	Reserved	Reserved	Reserved	Reserved
50	MJCP								
51	HDVICP								

3.7.4 ARM Boot Mode Configuration

The ARM can boot from either Asynchronous EMIF (OneNand/NOR) or from ARM ROM, as determined by the setting of the device configuration pins BTSEL[2:0]. The boot selection pins (BTSEL[2:0]) determine the ARM boot process. After reset (POR, warm reset, or max reset), ARM program execution begins in ARM ROM at 0x0000: 8000, except when BTSEL[2:0] = 001, indicating AEMIF (OneNand/NOR) flash boot.

Boot modes are further described in Section 3.2.

Copyright © 2009–2011, Texas Instruments Incorporated

3.7.5 AEMIF Configuration

3.7.5.1 AEMIF Pin Configuration

The input pins AECFG[2:0] determine the AEMIF configuration immediately after reset. Pins that are not assigned to another peripheral and not enabled as address signals become GPIOs. These may be used as ALE and CLE signals for NAND Flash control if booting from internal ROM. If booting from NOR Flash then the appropriate number of address output must be enabled by the AECFG[2:0] inputs at reset. The enabled address signals are always contiguous from EM_BA[1] upwards; bits cannot be skipped. EM_A[0] does not represent the lowest AEMIF address bit. The device has 23 address lines and 2 chip selects with an 8-bit or 16-bit option. The device supports **only** 8-bit and 16-bit data widths for the AEMIF.

- 16-bit mode: EM_BA[1] represents the LS address bit (the half-word address) and EM_BA[0] represents address bit (A[14]). The maximum number of address lines pins in 16-bit mode are 23, which include EM_BA[1] + EM_A[0:13] +EM_BA[0] (as pin A[14] via PINMUX2 register) + EM_A[15:20] +EM_A[21] (via PINMUX4 register)

  Note: Pins EM_A[15:21] are available by programming the PinMux4 register in software after boot, but must be pulled down externally so that valid voltage levels are provided on the full set of address pins during boot time. EM_A[15:21] come out of reset as GPIO pins per the PinMux4 register.
- 8-bit mode: EM_BA[1:0] represent the 2 LS address bits. Additional selections are available by programming the PinMux2 register in software after boot. The maximum number of address lines in 8-bit mode are 23, which include EM_BA[0:1] + EM_A[0:13] + A[14] (via PINMUX4 register) + EM_A[15:20].

  Note: Pins EM_A[15:20] are available by programming the PinMux4 register in software after boot, but must be pulled down externally so that valid voltage levels are provided on the full set of address pins during boot time. EM_A[15:20] come out of reset as GPIO pins per the PinMux4 register.

For additional details about the PinMux2 and PinMux4 registers, see the *TMS320DM36x DMSoC ARM Subsystem* Reference Guide (literature number SPRUFG5).

The device's pin-mux control logic allows all of the Asynchronous EMIF address pins to be used as GPIOs. If devices (such as NAND Flash) attached to the AEMIF require less than the 16 address pins provided, then the unused upper-order addresses may be configured as GPIOs. These pins must be configured at reset so that pins being driven by the AEMIF with addresses will not cause bus contention with pins being driven by the system as general purpose inputs.

The AECFG[2:0] value does not affect the operation of the AEMIF module itself, only which of its address bits are seen on the device pins (resulting in the natural ramifications if devices don't receive all address signals or if contention with general purpose inputs occurs). As shown in Table 3-14, the number of address bits enabled on the AEMIF is selectable from 0 to 16 at boot time, see notes above for additional support of up-to 23 address lines.

Table 3-14. AECFG (Async EMIF Configuration) Coding at Boot Time

000	001	010	100	101	110
GPIO[65]	EM_A[14]	EM_BA[0]	GPIO[65]	EM_A[14]	EM_BA[0]
GPIO[66]	EM_BA[1]	EM_BA[1]	GPIO[66]	EM_BA[1]	EM_BA[1]
GPIO[67]	EM_A[0]	EM_A[0]	GPIO[67]	EM_A[0]	EM_A[0]
EM_A[1]	EM_A[1]	EM_A[1]	EM_A[1]	EM_A[1]	EM_A[1]
EM_A[2]	EM_A[2]	EM_A[2]	EM_A[2]	EM_A[2]	EM_A[2]
GPIO[68]	EM_A[3]	EM_A[3]	GPIO[68]	EM_A[3]	EM_A[3]
GPIO[69]	EM_A[4]	EM_A[4]	GPIO[69]	EM_A[4]	EM_A[4]
GPIO[70]	EM_A[5]	EM_A[5]	GPIO[70]	EM_A[5]	EM_A[5]
GPIO[71]	EM_A[6]	EM_A[6]	GPIO[71]	EM_A[6]	EM_A[6]
GPIO[72]	EM_A[7]	EM_A[7]	GPIO[72]	EM_A[7]	EM_A[7]
GPIO[73]	EM_A[8]	EM_A[8]	GPIO[73]	EM_A[8]	EM_A[8]
GPIO[74]	EM_A[9]	EM_A[9]	GPIO[74]	EM_A[9]	EM_A[9]
GPIO[75]	EM_A[10]	EM_A[10]	GPIO[75]	EM_A[10]	EM_A[10]
GPIO[76]	EM_A[11]	EM_A[11]	GPIO[76]	EM_A[11]	EM_A[11]
GPIO[77]	EM_A[12]	EM_A[12]	GPIO[77]	EM_A[12]	EM_A[12]
GPIO[78]	EM_A[13]	EM_A[13]	GPIO[78]	EM_A[13]	EM_A[13]
GPIO[57]	GPIO[46]	GPIO[46]	EM_D[8]	EM_D[8]	EM_D[8]
GPIO[58]	GPIO[47]	GPIO[47]	EM_D[9]	EM_D[9]	EM_D[9]
GPIO[59]	GPIO[48]	GPIO[48]	EM_D[10]	EM_D[10]	EM_D[10]
GPIO[60]	GPIO[49]	GPIO[49]	EM_D[11]	EM_D[11]	EM_D[11]
GPIO[61]	GPIO[50]	GPIO[50]	EM_D[12]	EM_D[12]	EM_D[12]
GPIO[62]	GPIO[51]	GPIO[51]	EM_D[13]	EM_D[13]	EM_D[13]
GPIO[63]	GPIO[52]	GPIO[52]	EM_D[14]	EM_D[14]	EM_D[14]
GPIO[64]	GPIO[53]	GPIO[53]	EM_D[15]	EM_D[15]	EM_D[15]

3.7.5.2 AEMIF Timing Configuration

When AEMIF is enabled, the wait state registers are reset to the slowest possible configuration, which is 88 cycles per access (16 cycles of setup, 64 cycles of strobe, and 8 cycles of hold). Thus, with a 24 MHz clock at MXI/MXO, the AEMIF is configured to run at (12 MHz/ 88) which equals approximately 136.36 kHz.

3.7.6 Oscillator Frequency Configuration

The oscillator input pins, MXI1, MXO, are designed to operate in two frequency ranges depending on the GIO81(OSCCFG) pin sampled at reset, which should be set according to the required input frequency of operation. See Table 3-15 for details.

Table 3-15. Operation Frequency

MODE	GIO81 (OSCCFG)	OSCILLATION
1	0	15 - 35MHz
2	1	30 - 40MHz

The frequency selection pin cannot be changed dynamically while the oscillator is running. They should only be set once before oscillator startup.

The GIO81(OSCCFG) state is latched during reset, and it specifies the oscillation frequency mode as shown in Table 3-15.

Copyright © 2009–2011, Texas Instruments Incorporated

3.8 Debugging Considerations

3.8.1 Pullup/Pulldown Resistors

Proper board design should ensure that input pins to the DMSoC device always be at a valid logic level and not floating. This may be achieved via pullup/pulldown resistors. The DMSoC features internal pullup (IPU) and internal pulldown (IPD) resistors on most pins to eliminate the need, unless otherwise noted, for external pullup/pulldown resistors.

An external pullup/pulldown resistor needs to be used in the following situations:

- *Boot and Configuration Pins*: If the pin is both routed out and 3-stated (not driven), an external pullup/pulldown resistor is ***strongly recommended***, even if the IPU/IPD matches the desired value/state.
- *Other Input Pins*: If the IPU/IPD *does not* match the desired value/state, use an external pullup/pulldown resistor to pull the signal to the opposite rail.

For the boot and configuration pins, if they are both routed out and 3-stated (not driven), it is ***strongly recommended*** that an external pullup/pulldown resistor be implemented. Although, internal pullup/pulldown resistors exist on these pins and they may match the desired configuration value, providing external connectivity can help ensure that valid logic levels are latched on these device boot and configuration pins. In addition, applying external pullup/pulldown resistors on the boot and configuration pins adds convenience to the user in debugging and flexibility in switching operating modes.

Tips for choosing an external pullup/pulldown resistor:

- Consider the total amount of current that may pass through the pullup or pulldown resistor. Make sure to include the leakage currents of all the devices connected to the net, as well as any internal pullup or pulldown resistors.
- Decide a target value for the net. For a pulldown resistor, this should be below the lowest V_{IL} level of all inputs connected to the net. For a pullup resistor, this should be above the highest V_{IH} level of all inputs on the net. A reasonable choice would be to target the V_{OL} or V_{OH} levels for the logic family of the limiting device; which, by definition, have margin to the V_{IL} and V_{IH} levels.
- Select a pullup/pulldown resistor with the largest possible value; but, which can still ensure that the net will reach the target pulled value when maximum current from all devices on the net is flowing through the resistor. The current to be considered includes leakage current plus, any other internal and external pullup/pulldown resistors on the net.
- For bidirectional nets, there is an additional consideration which sets a lower limit on the resistance value of the external resistor. Verify that the resistance is small enough that the weakest output buffer can drive the net to the opposite logic level (including margin).
- Remember to include tolerances when selecting the resistor value.
- For pullup resistors, also remember to include tolerances on the DV_{DD} rail.

For most systems, a 1-kΩ resistor can be used to oppose the IPU/IPD while meeting the above criteria. Users should confirm this resistor value is correct for their specific application.

For most systems, a 20-kΩ resistor can be used to compliment the IPU/IPD on the boot and configuration pins while meeting the above criteria. Users should confirm this resistor value is correct for their specific application.

For more detailed information on input current (I_I), and the low-/high-level input voltages (V_{IL} and V_{IH}) for the device, see Section 5.2, *Recommended Operating Conditions*.

For the internal pullup/pulldown resistors for all device pins, see the peripheral/system-specific terminal functions table.

4 System Interconnect

The device uses a 64-bit crossbar architecture to control access between device processors, subsystems and peripherals. There are eleven transfer masters (TCs have separate read and write connections) connected to the crossbar; ARM, the Video Processing Subsystem (VPSS), the master peripherals (USB, EMAC, HPI), and four EDMA transfer controllers. These can be connected to seven separate slave ports; ARM, the DDR EMIF, CFG bus peripherals, MJCP, and HDVICP. Not all masters may connect to all slaves. Connection paths are indicated by √ at intersection points shown in Table 4-1.

Table 4-1. System Connection Matrix

	SLAVE MODULE				
DMA Master	ARM Internal Memory	MPEG/JPEG Coprocessor Memory	HD Video Image Coprocessor Memory	Config Bus Registers and Memory	DDR EMIF Memory
ARM	√	√	√	√	√
VPSS			√		√
DMA Master Peripherals (USB, EMAC, HPI)	√				√
EDMA3TC0	√	√	√	√	√
EDMA3TC1	√	√	√	√	√
EDMA3TC2	√	√	√	√	√
EDMA3TC3	√	√	√	√	√

Copyright © 2009–2011, Texas Instruments Incorporated

5 Device Operating Conditions

5.1 Absolute Maximum Ratings Over Operating Case Temperature Range (Unless Otherwise Noted) (1) (2)

Supply voltage ranges	All 1.2-V / 1.35-V supplies	-0.3 V to 1.6 V
	All 1.8 V supplies	-0.3 V to 2.45 V
	All 3.3 V supplies	-0.3 V to 3.8 V
Input voltage ranges	All 1.8 V I/Os	-0.5 V to 2.6 V
	All 3.3 V I/Os	-0.5 V to 3.8 V
	USB_VBUS	0 V to 5.5 V
Operating case temperature ranges	Commercial Temperature T_c	0°C to 85 °C
	Extended Temperature [D version devices] T_c	-40°C to 85 °C
Storage temperature ranges	T_{stg}	-55°C to 150°C

(1) Stresses beyond those listed under "absolute maximum ratings" may cause permanent damage to the device. These are stress ratings only, and functional operation of the device at these or any other conditions beyond those indicated under "recommended operating conditions" is not implied. Exposure to absolute-maximum-rated conditions for extended periods may affect device reliability.
(2) All voltage values are with respect to V_{SS}.

5.2 Recommended Operating Conditions

	NAME	DESCRIPTION		MIN	NOM	MAX	UNIT
Supply Voltage	C_{VDD}	Core Supply Voltage	216, 270-MHz devices	1.14	1.2	1.26	V
			300-MHz devices	1.28	1.35	1.42	
	V_{DD12_PRTCSS}	PRTCSS Oscillator and PRTCSS Core Supply Voltage	216, 270-MHz devices	1.14	1.2	1.26	V
			300-MHz devices	1.28	1.35	1.42	
	V_{DDA12_DAC}	1.2-V DAC Supply Voltage	216, 270-MHz devices	1.14	1.2	1.26	V
			300-MHz devices	1.28	1.35	1.42	
	V_{PP} (1)	VPP Supply Voltage	216, 270-MHz devices	1.14	1.2	1.26	V
			300-MHz devices	1.28	1.35	1.42	
	V_{DDS18}	1.8-V Supply Voltage		1.71	1.8	1.89	V
	V_{DD18_PRTCSS}	1.8-V PWR CTRL Supply Voltage					
	V_{DDMXI}	1.8-V System Oscillator Supply Voltage					
	V_{DD18_DDR}	1.8-V DDR2 Supply Voltage					
	V_{DDA18_PLL}	1.8-V PLL Supply Voltage					
	V_{DDA18_USB}	1.8-V USB Supply Voltage					
	V_{DDA18_VC}	1.8-V Voice CODEC Supply Voltage					
	V_{DDA18_USB}	1.8-V USB Supply Voltage					
	V_{DDA18_ADC}	1.8-V ADC Supply Voltage					
	V_{DDA18_DAC}	1.8-V DAC Supply Voltage					
	$V_{DD_AEMIF1_18_33}$	1.8/3.3-V switchable EMIF1 Supply Voltage		1.71/3.14	1.8/3.3	1.89/3.46	V
	$V_{DD_AEMIF2_18_33}$	1.8/3.3-V switchable EMIF2 Supply Voltage					
	$V_{DD_ISIF18_33}$	1.8/3.3-V switchable ISIF Supply Voltage					
	V_{DDS33}	3.3-V Supply Voltage		3.14	3.3	3.46	V
	V_{DDA33_USB}	3.3-V USB Supply Voltage					
	V_{DDA33_VC}	3.3-V Voice CODEC Supply Voltage					
Supply Ground	V_{SS}	Core, USB Digital ground		0	0	0	V
	V_{SS_MX1}	OSC (MX1) ground (2)					
	V_{SS_32K}	OSC (32K) ground (2)					
	V_{SSA}	PLL ground (3)					
	V_{SSA18_USB}	USB ground					
	V_{SSA33_USB}	3.3-V USB ground					
	V_{SSA33_VC}	3.3-V Voice CODEC ground					
	V_{SSA18_VC}	1.8-V Voice CODEC ground					
	V_{SSA_ADC}	ADC ground					
	V_{SSA18_DAC}	1.8-V DAC ground					
	V_{SSA12_DAC}	1.2-V DAC ground					
Voltage Input High	V_{IH}	High-level input voltage (4), excludes switchable I/O (3.3V I/O)		2			V
		High-level input voltage, non-DDR2 I/O, excludes switchable I/O (1.8V I/O)		$0.7V_{DDS18}$			V

(1) For proper device operation, this pin must always be connected to C_{VDD}.
(2) Oscillator ground must be kept separate from other grounds and connected directly to the crystal load capacitor ground (see Section 6.6.1).
(3) For proper device operation, keep this pin separate from digital ground.
(4) These I/O specifications apply to regular 3.3 V I/Os and do not apply to DDR2/mDDR, USB I/Os. DDR2/mDDR I/Os are 1.8 V I/Os and adhere to JESD79-2A standard, USB I/Os adhere to USB2.0 spec.

Copyright © 2009–2011, Texas Instruments Incorporated

	NAME	DESCRIPTION		MIN	NOM	MAX	UNIT
	$V_{IH12RTC}$	High-level input voltage I/O (1.2-V or 1.35-V) (PWRCNT/PWRST/RTCXI/RTCXO)		0.75*VDD12_PRTCSS			V
	V_{IH1833}	HIgh-level switchable input voltage[4] (VDD_AEMIF1_18_33, VDD_AEMIF2_18_33, VDD_ISIF_18_33 powered I/Os)[5][6][7][8]	3.3V I/O mode	2			V
			1.8V I/O mode	$0.7V_{DDS18}$			
Voltage Input Low	V_{IL}	Low-level input voltage[4], excludes switchable I/O (3.3V I/O)				0.8	V
		Low-level input voltage[4], non-DDR2 I/O, excludes switchable I/O (1.8V I/O)				0.3*VDDS18	V
	$V_{IL12RTC}$	RTC Low-level input voltage[4] (1.2V I/O)				0.25*VDD12_PRTCSS	V
	V_{IL1833}	Low-level switchable input voltage[4] (VDD_AEMIF1_18_33, VDD_AEMIF2_18_33, VDD_ISIF_18_33 powered I/Os)	3.3V I/O mode			0.8	V
			1.8V I/O mode			0.3*VDDS18	
HD 3CH DAC[9]	V_{REF}	DAC reference voltage		475	500	525	mV
	R_{BIAS}	DAC full-scale current adjust resistor		2376	2400	2424	Ω
	R_{LOAD_X}	Output resistor		74.25	75	75.75	Ω
	C_{BG}	Bypass capacitor			0.1		uF
Video Buffer[9]	R_{OUT}	Output resistor (ROUT), between TVOUT and VFB pins		2128.5	2150	2171.5	Ω
	R_{FB}	Feedback resistor, between VFB and IDACOUT pins.		2079	2100	2121	
	R_{BIAS}	Full-scale current adjust resistor			2400		Ω
	C_{BG}	Bypass capacitor			0.1		uF
USB	USB_VBUS	USB external charge pump input		0		5.25	V
	$V_{DDA12LDO_USB}$	Internal LDO output[10]			0.22		µF
Voice Codec	f_s	Sampling frequency		8		16	kHz
	-	System clock				$256f_s$	kHz
ADC	F_{SCLK}	SCLK frequency				2	MHz
Temperature	T_c	Operating case temperature range	Default Temperature	0		85	°C
			Extended Temperature [D version devices]	-40		85	°C

(5) $V_{DD_AEMIF1_18_33}$: can be used as a power supply for EM_A[3:13], EM_BA0, EM_BA1, $\overline{\text{EM_CE[0]}}$, EM_ADV, EM_CLK, EM_D[8:15]pins, Keyscan, or GPIO pins.
(6) $V_{DD_AEMIF2_18_33}$: can be used as a power supply for EM_A[0:2], $\overline{\text{EM_CE[1]}}$, $\overline{\text{EM_WE}}$, $\overline{\text{EM_OE}}$, EM_WAIT, EM_D[0:7] pins, HPI, Keyscan, or GPIO pins.
(7) **Example 1**: $V_{DD_AEMIF2_18_33}$ at 1.8-V for 8-bit NAND $V_{DD_AEMIF1_18_33}$ at 3.3-V for GPIO.
Example 2: $V_{DD_AEMIF1_18_33}$ and $V_{DD_AEMIF2_18_33}$ at 1.8-V for 16-bit NAND.
(8) $V_{DD_ISIF_18_33}$: can be used as a power supply for VPFE pins (CIN[7:0], YIN[7:0], C_WE_FIELD, PCLK), or SPI3 (SPI3_SCLK,SPI3_SIMO,SPI3_SCS[0], SPI3_SCS[1]) or USBDRVVBUS or GPIO pins.
(9) See Section 6.12.2.4. Also, resistors should be E-96 spec line (3 digits with 1% accuracy).
(10) For proper device operation, this pin must be connected to a 0.22µF capacitor to $V_{DDA12LDO_USB}$.

5.3 Electrical Characteristics Over Recommended Ranges of Supply Voltage and Operating Case Temperature (Unless Otherwise Noted)

PARAMETER			TEST CONDITIONS [1]	MIN	TYP	MAX	UNIT
Voltage Output[2]	V_{OH}	High-level output voltage (3.3V I/O)	V_{DDS33} = MIN, I_{OH} = -2mA	2.4			V
		High-level output voltage (3.3V I/O)	V_{DDS33} = MIN, I_{OH} = -100µA	2.94			
		High-level output voltage (1.8V I/O)	V_{DDS18} = MIN, I_{OH} = -2mA	V_{DDS18} - 0.45			
	V_{OL}	Low-level output voltage (3.3V I/O)	V_{DDS33} = MIN, I_{OL} = 2mA			0.4	V
		Low-level output voltage (3.3V I/O)	V_{DDS33} = MIN, I_{OL} = 100µA			0.2	
		Low-level output voltage (1.8V I/O)	V_{DDS18} = MIN, I_{OH} = 2mA			0.45	
Current Input/Output	I_I	Input current for I/O without internal pull-up/pull-down	V_I = V_{SS} to V_{DD}			±10	µA
	$I_{I(pullup)}$	Input current for I/O with internal pull-up[3] [4]	V_I = V_{SS} to V_{DD}		100		
	$I_{I(pulldown)}$	Input current for I/O with internal pull-down[3] [4]	V_I = V_{SS} to V_{DD}		-100		
	I_{OH}	High-level output current	All peripherals		-4000		
	I_{OL}	Low-level output current	All peripherals		4000		
	I_{OZ} [5]	I/O off-state output current	V_O = V_{DD} or V_{SS} (internal pull disabled)		±20		
Capacitance	C_I	Input capacitance			4		pF
	C_O	Output capacitance			4		
HD 3CH DAC	Resolution	Resolution			10		Bits
	INL	Integral non-linearity, best fit	R_{LOAD} = 75 Ω (video buffer disabled)	-1.5		1.5	LSB
	DNL	Differential non-linearity	R_{LOAD} = 75 Ω (video buffer disabled)	-1		1	LSB
	V_{OUT}	Output compliance range	IFS = 6.67 mA, R_{LOAD} = 75 Ω	0		V_{REF}	V
	Z_{SET}	Zero Scale Offset Error				0.5	%
	G_ERR	Gain Error		-5		5	%
	Ch_match	Channel matching			+/-2		%
Video Buffer	$V_{OH(VIDBUF)}$	Output high voltage (top of 75% NTSC or PAL colorbar)			1.35		V
	$V_{OL(VIDBUF)}$	Output low voltage (bottom of sync tip)			0.35		
	RES	Resolution			10		bits
	V_{OUT}	Output Voltage	R_{LOAD} = 75 Ω	0.35		1.35	V

(1) For test conditions shown as MIN, MAX, or NOM, use the appropriate value specified in the recommended operating conditions table.
(2) These I/O specifications apply to regular 3.3 V and 1.8V I/Os and do not apply to DDR2/mDDR, USB I/Os. DDR2/mDDR I/Os are 1.8 V I/Os and adhere to JESD79-2A standard, USB I/Os adhere to USB2.0 spec.
(3) This specification applies only to pins with an internal pullup (PU) or pulldown (PD). See or Section 2.8 for pin descriptions.
(4) To pull up a signal to the opposite supply rail, a 1 kΩ resistor is recommended.
(5) I_{OZ} applies to output only pins, indicating off-state (Hi-Z) output leakage current.

Copyright © 2009–2011, Texas Instruments Incorporated

PARAMETER			TEST CONDITIONS [1]	MIN	TYP	MAX	UNIT
Voice Codec	**MIC in to ADC (gain = 20 dB)**						
	V_{mic}	Full scale input			0.063		Vrms
	GeAD	Gain error			0		dB
	V_{com}	Common voltage			0.9		V
		THD + N	-1db, 1kHz		-62		dB
		DNR	A-weighted		70		dB
		SNR	A-weighted		67		dB
		Input resistance			10		kΩ
		Input capacitance			10		pF
	DAC-to-Line Output						
		Full scale output			0.8		Vrms
		Gain error			0		dB
		Common voltage			1.5		V
		THD + N			-60		dB
		DNR	A-weighted		70		dB
		SNR	A-weighted		70		dB
		Load resistance		10			kΩ
		Load capacitance				20	pF
	DAC-to-Speaker Output						
		Output power	R_L = 8Ω, THD = 10%		240		mW
		Output noise	A-weighted		120		μVrms
		Load resistance		8			Ω
		Load capacitance				50	pF
	Decimation filter in ADC						
		Pass band			$0.375f_s$		kHz
		Pass band ripple			+/- 0.2		dB
		Stop band			$0.562f_s$		kHz
		Stop band attenuation			40		dB
		HPF cutoff frequency			1.25mfs		Hz
	Interpolation filter in DAC						
		Pass band			$0.437f_s$		kHz
		Pass band ripple			+/- 0.2		dB
		Stop band			$0.562f_s$		kHz
		Stop band attenuation			40		dB
ADC	DNL	Static differential non-linearity error	F_{SCLK} = 2MHz	-1		2.5	LSB
	INL	Static integral non-linearity error	F_{SCLK} = 2MHz	-3		3	LSB
	Z_{SET}	Zero scale offset error		-6		6	LSB
	F_{SET}	Full scale offset error		-6		6	LSB

6 Peripheral Information and Electrical Specifications

6.1 Parameter Information Device-Specific Information

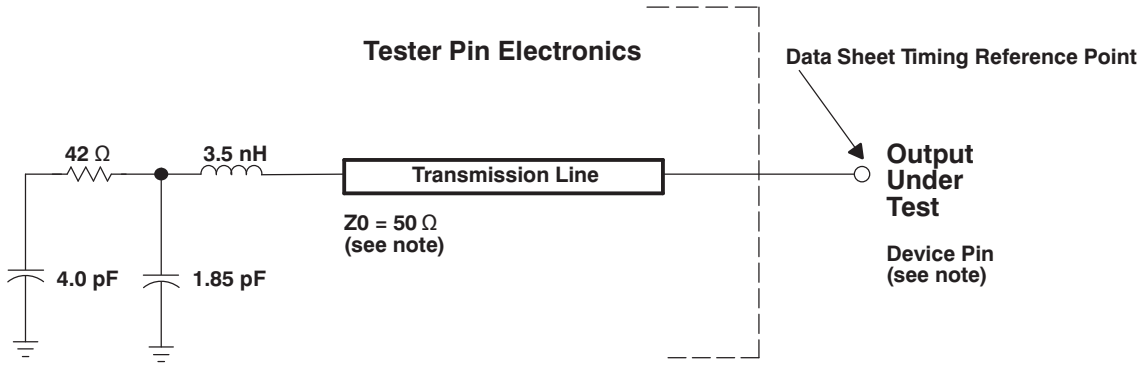

A. The data sheet provides timing at the device pin. For output timing analysis, the tester pin electronics and its transmission line effects must be taken into account. A model of the tester pin electronics is shown in Figure 6-1. A transmission line with a delay of 2 ns or longer can be used to produce the desired transmission line effect. The transmission line is intended as a load only. It is not necessary to add or subtract the transmission line delay (2 ns or longer) from the data sheet timings.
Input requirements in this data sheet are tested with an input slew rate of < 4 Volts per nanosecond (4 V/ns) at the device pin and the input signals are driven between 0V and the appropriate I/O supply for the signal.

Figure 6-1. Test Load Circuit for AC Timing Measurements

The load capacitance value stated is only for characterization and measurement of AC timing signals. This load capacitance value does not indicate the maximum load the device is capable of driving.

6.1.1 Signal Transition Levels

All input and output timing parameters are referenced to V_{ref} for both "0" and "1" logic levels. For 3.3 V I/O, V_{ref} = 1.65 V. For 1.8 V I/O, V_{ref} = 0.9 V.

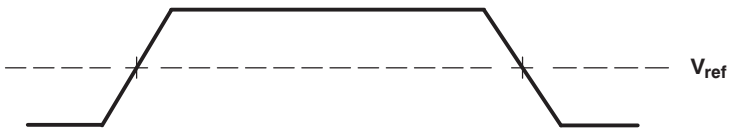

Figure 6-2. Input and Output Voltage Reference Levels for AC Timing Measurements

All rise and fall transition timing parameters are referenced to V_{IL} MAX and V_{IH} MIN for input clocks, V_{OL}MAX and V_{OH} MIN for output clocks.

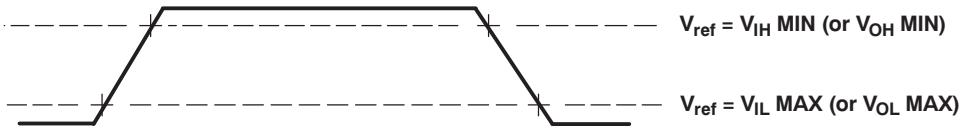

Figure 6-3. Rise and Fall Transition Time Voltage Reference Levels

6.1.2 Timing Parameters and Board Routing Analysis

The timing parameter values specified in this data sheet do *not* include delays by board routings. As a good board design practice, such delays must *always* be taken into account. Timing values may be adjusted by increasing/decreasing such delays. TI recommends utilizing the available I/O buffer information specification (IBIS) models to analyze the timing characteristics correctly. To properly use IBIS models to attain accurate timing analysis for a given system, see the *Using IBIS Models for Timing Analysis* Application Report (literature number SPRA839). If needed, external logic hardware such as buffers may be used to compensate any timing differences.

 Copyright © 2009–2011, Texas Instruments Incorporated

6.2 Recommended Clock and Control Signal Transition Behavior

All clocks and control signals should transition between V_{IH} and V_{IL} (or between V_{IL} and V_{IH}) in a monotonic manner.

6.3 Power Supplies

The power supplies are summarized in Table 6-1.

Table 6-1. Power Supplies

CUSTOMER BOARD SUPPLY	TOLERANCE	PACKAGE PLANE	DEVICE PLANE	DESCRIPTION
1.2V or 1.35V	±5%	1.2V or 1.35V	CV_{DD}	Core power supply
			V_{DD12_PRTCSS}	RTC oscillator power supply
				PWR CTRL power supply
				PWR CTRL 1.2-V or 1.35-V I/O power supply
			V_{DDA12_DAC}	DAC 1.2-V or 1.35-V analog power supply
			V_{PP}	V_{PP} power supply
1.8 V	±5%	1.8 V	V_{DD18_PRTCSS}	PWR CTRL 1.8-V power supply
			V_{DDMXI}	MXI1 (oscillator) 1.8-V power supply
			V_{DD18_SLDO}	Power supply for internal RAM For proper device operation, this pin must be connected to V_{DDS18}.
			V_{DD18_DDR}	1.8-V DDR2 Supply Voltage
			V_{DDA18_PLL}	1.8-V PLL Analog Supply Voltage
			V_{DDA18_USB}	1.8-V USB Analog Supply Voltage
			V_{DDA18_VC}	1.8-V Voice Codec Module Analog Supply Voltage
			V_{DDA18_DAC}	1.8-V DAC Analog Supply Voltage
			V_{DDS18}	1.8-V Supply Voltage
			V_{DDA18_ADC}	1.8-V ADC Supply Voltage
3.3 V	±5%	3.3 V	V_{DDS33}	3.3-V I/O Supply Voltage
			V_{DDA33_USB}	3.3-V USB Analog Supply Voltage
			V_{DDA33_VC}	3.3-V Voice Codec Module Analog Supply Voltage
1.8/3.3 V	±5%	1.8/3.3 V	$V_{DD_AEMIF1_18_33}$	Switchable 3.3/1.8-V EMIF1 Supply Voltage (1) **Note**: Power supply is switchable for AEMIF and its multiplexed peripherals (3.3/1.8 V) (2).
			$V_{DD_AEMIF2_18_33}$	Switchable 3.3/1.8-V EMIF2 Supply Voltage (3) **Note**: Power supply is switchable for AEMIF and its multiplexed peripherals (3.3/1.8 V) (2).
			$V_{DD_ISIF18_33}$	Switchable 3.3/1.8-V ISIF Supply Voltage (4) **Note**: Power supply is switchable for ISIF and its multiplexed peripherals (3.3V/1.8V)(5)
0 V		0 V	V_{SS_MX1}	Oscillator (MXI1) ground **Note:** For proper device operation, connect to external crystal capacitor ground and must be kept separate from other grounds.
0 V		0 V	V_{SS_32K}	Oscillator (32K) ground **Note**: For proper device operation, connect to external crystal capacitor ground and must be kept separate from other grounds.
0 V		0 V	V_{SS}	Ground

(1) $V_{DD_AEMIF1_18_33}$: can be used as a power supply for EM_A[3:13], EM_BA0, EM_BA1, $\overline{\text{EM_CE[0]}}$, EM_ADV, EM_CLK, EM_D[8:15]pins, Keyscan, or GPIO pins.
(2) **Example 1**: $V_{DD_AEMIF2_18_33}$ at 1.8-V for 8-bit NAND $V_{DD_AEMIF1_18_33}$ at 3.3-V for GPIO.
Example 2: $V_{DD_AEMIF1_18_33}$ and $V_{DD_AEMIF2_18_33}$ at 1.8-V for 16-bit NAND.
(3) $V_{DD_AEMIF2_18_33}$: can be used as a power supply for EM_A[0:2], $\overline{\text{EM_CE[1]}}$, $\overline{\text{EM_WE}}$, $\overline{\text{EM_OE}}$, EM_WAIT, EM_D[0:7] pins, HPI, Keyscan, or GPIO pins.
(4) $V_{DD_ISIF_18_33}$: can be used as a power supply for VPFE pins (CIN[7:0], YIN[7:0], C_WE_FIELD, PCLK), or SPI3 (SPI3_SCLK,SPI3_SIMO,SPI3_SCS[0], SPI3_SCS[1]) or USBDRVVBUS or GPIO pins.
(5) **Example 1** $V_{DD_ISIF_18_33}$ power supply can be at 1.8V for VPFE pin functionality or it can be at 3.3V if other peripherals pin functionality is to be used like SPI3 or GPIO or CLKOUT0, or USBDRVVBUS.

Copyright © 2009–2011, Texas Instruments Incorporated

Table 6-1. Power Supplies (continued)

CUSTOMER BOARD SUPPLY	TOLERANCE	PACKAGE PLANE	DEVICE PLANE	DESCRIPTION
0 V		0 V	V_{SSA}	PLL ground **Note**: For proper device operation, keep separate from digital ground V_{SS}.
0 V		0 V	V_{SSA18_USB}	USB ground
0 V		0 V	V_{SSA33_USB}	3.3-V USB ground
0 V		0 V	V_{SSA33_VC}	3.3-V Voice Codec Module ground
0 V		0 V	V_{SSA18_VC}	1.8-V Voice Codec Module ground
0 V		0 V	V_{SSA_ADC}	Analog-to-digital converter (ADC) ground
0 V		0 V	V_{SSA18_DAC}	1.8-V DAC ground
0 V		0 V	V_{SSA12_DAC}	1.2-V DAC ground
V_{DD18_DDR}*0.5		V_{DD18_DDR}*0.5	DDR_VREF	DRR reference voltage (V_{DDS} divided by 2, through board resistors)
0.5V	±5%		V_{REF}	DAC reference voltage
5.25V			USB_VBUS	VBUS

6.4 Power-Supply Sequencing

In order to ensure device reliability, the device requires the following power supply power-on and power-off sequences. See Section 5.2, *Recommended Operating Conditions*, for a description of the power supplies.

- The following power sequences are recommended to prevent damage to the device.
- The PRTCSS core must always be powered-on and powered-off regardless of whether the PRTCSS feature is used.
- If the PRTCSS sequencer is to be used in any PRTCSS modes, please refer to the *TMS320DM36x PRTCSS User's Guide* (literature number SPRUFJ0) for more details on the differences to the power sequence.

6.4.1 Simple Power-On and Power-Off Method

The following steps must be followed in sequential order for the simple power-on method:

1. Power on the PRTCSS/ Main core (1.2-V or 1.35-V).
2. Power on the PRTCSS/Main I/O (1.8-V).
3. Power on the Main/Analog I/O (3.3-V).

Note for simple power-on: RESET must be low until all supplies are ramped up.

The following steps should be followed for the simple power-off method:

1. Power off the Main/Analog I/O (3.3-V).
2. Power off the PRTCSS/Main I/O (1.8-V).
3. Power off the PRTCSS/Main core (1.2-V or 1.35-V).

Notes for simple power-off:

– If RESET is low, steps 2 and 3 may be performed simultaneously.
– If RESET **is not** low, these steps **must** be followed sequentially.

6.4.2 Restricted Power-On and Power-Off Method

The following steps should be followed for the restricted power-on method:

1. Power on the PRTCSS/ Main core (1.2-V or 1.35-V).
2. Power on the PRTCSS/Main I/O (1.8-V).
3. Power on the Main/Analog I/O (3.3-V).

Notes for restricted power-on:

 Copyright © 2009–2011, Texas Instruments Incorporated

- RESET must be low until all supplies are ramped up.
- Steps 1, 2, and 3 may be performed simultaneously if the Main core finishes ramping up before the I/Os ***and*** the maximum delta voltage difference between the 1.8-V and 3.3-V I/Os is 2.0-V until the 1.8-V I/O reaches the full voltage.

The following steps should be followed for the restricted power-off method:

1. Power off Main/Analog I/O (3.3-V).
2. Power off PRTCSS/Main I/O (1.8-V).
3. Power off PRTCSS/Main core (1.2-V or 1.35-V).

Notes for restricted power-off:

- The 3.3-/1.8-V I/Os may be powered off simultaneously if the maximum delta voltage difference between them is 2.0V until the 1.8-V I/O is completely powered off, ***and*** the PRTCSS/Main core ***must be*** powered down last.

When booting the DM365 from OneNAND, you must ensure that the OneNAND device is ready with valid program instructions before the DM365 attempts to read program instructions from it. In particular, before you release the device's reset, you must allow time for OneNAND device power to stabilize and for the OneNAND device to complete its internal copy routine. During the internal copy routine, the OneNAND device copies boot code from its internal non-volatile memory to its internal boot memory section. Board designers typically achieve this requirement by design of the system power and reset supervisor circuit. Refer to your OneNAND device datasheet for OneNAND power ramp and stabilization times and for OneNAND boot copy times.

6.4.3 Power-Supply Design Considerations

Core and I/O supply voltage regulators should be located close to the device to minimize inductance and resistance in the power delivery path. Additionally, when designing for high-performance applications utilizing the device, the PC board should include separate power planes for core, I/O, and ground, all bypassed with high-quality low-ESL/ESR capacitors.

6.4.4 Power-Supply Decoupling

In order to properly decouple the supply planes from system noise, place as many capacitors (caps) as possible close to the device. These caps need to be close to the power pins, no more than 1.25 cm maximum distance to be effective. Physically smaller caps, such as 0402, are better because of their lower parasitic inductance. Proper capacitance values are also important. Small bypass caps (near 560 pF) should be closest to the power pins. Medium bypass caps (220 nF or as large as can be obtained in a small package) should be next closest. TI recommends no less than 8 small and 8 medium caps per supply be placed immediately next to the BGA vias, using the "interior" BGA space and at least the corners of the "exterior".

Larger caps for each supply can be placed further away for bulk decoupling. Large bulk caps (on the order of 100 uF) should be furthest away, but still as close as possible. Large caps for each supply should be placed outside of the BGA footprint.

Any cap selection needs to be evaluated from a yield/manufacturing point-of-view. As with the selection of any component, verification of capacitor availability over the product's production lifetime should be considered. See also Section 6.6.1 for additional recommendations on power supplies for the oscillator/PLL supplies.

6.5 Reset

6.5.1 Reset Electrical Data/Timing

Table 6-2. Timing Requirements for Reset (1) (2) (3) (see Figure 6-4)

NO.			DEVICE		UNIT
			MIN	MAX	
1	$t_{w(RESET)}$	Active low width of the $\overline{RESET}$ pulse	12C		ns
2	$t_{su(BOOT)}$	Setup time, boot configuration pins valid before $\overline{RESET}$ rising edge	2E		ns
3	$t_{h(BOOT)}$	Hold time, boot configuration pins valid after $\overline{RESET}$ rising edge	0		ns

(1) BTSEL[2:0] and AECFG[2:0] are the boot configuration pins during device reset.
(2) C = MXI1/CLKIN cycle time in ns. For example, when MXI1/CLKIN frequency is 24 MHz use C = 41.$\overline{6}$ ns.
(3) E = 1/PLLC1SYSCLK4 cycle time in ns.

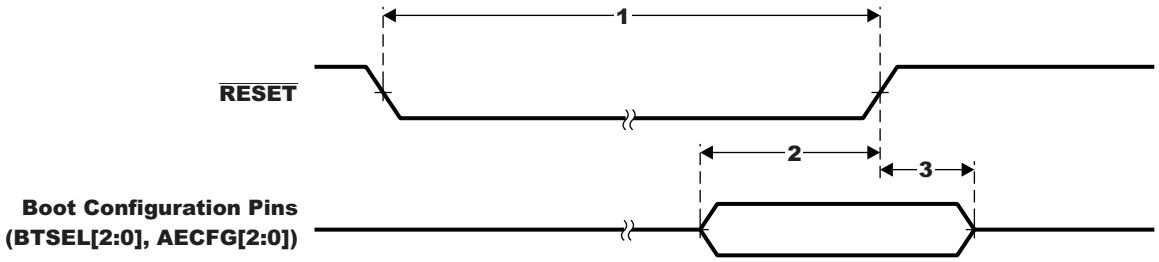

Figure 6-4. Reset Timing

Copyright © 2009–2011, Texas Instruments Incorporated

6.6 Oscillators and Clocks

The device has one oscillator input/output pair (MXI1/MXO1) usable with external crystals or ceramic resonators to provide clock inputs. The optimal frequencies for the crystals are 19.2 MHz, 24 MHz, 27 MHz, and 36 MHz. Optionally, the oscillator inputs are configurable for use with external clock oscillators. If external clock oscillators are used, to minimize the clock jitter, a single clean power supply should power both the device and the external oscillator circuit and the minimum CLKIN rise and fall times must be observed. The electrical requirements and characteristics are described in this section.

The timing parameters for CLKOUT[3:1] are also described in this section. The device has three output clock pins (CLKOUT[3:1]). See Section 3.3 for more information on CLKOUT[3:1].

Note: Please ensure that the appropriate oscillator input pin (GIO81/OSCCFG) frequency range setting is set correctly. For more details on this pin setting, see Section 3.7.6.

6.6.1 MXI1 Oscillator

The MXI1 (typically 24 MHz, can also be 19.2 MHz, 27 MHz, or 36 MHz) oscillator provides the primary reference clock for the device. The on-chip oscillator requires an external crystal connected across the MXI1 and MXO1 pins, along with two load capacitors, as shown in Figure 6-5. The external crystal load capacitors ***must*** be connected only to the oscillator ground pin (V_{SS_MX1}). ***Do not*** connect to board ground (V_{SS}). Also, the PLL power pin (V_{DDA_PLL1}) should be connected to the power supply through a ferrite bead, L1 in the example circuit shown in Figure 6-5.

Note: If an external oscillator is to be used, the external oscillator clock signal should be connected to the MXI1 pin with a 1.8V amplitude. The MXO1 should be left unconnected and the VSS_MX1 signal should be connected to board ground (V_{ss}).

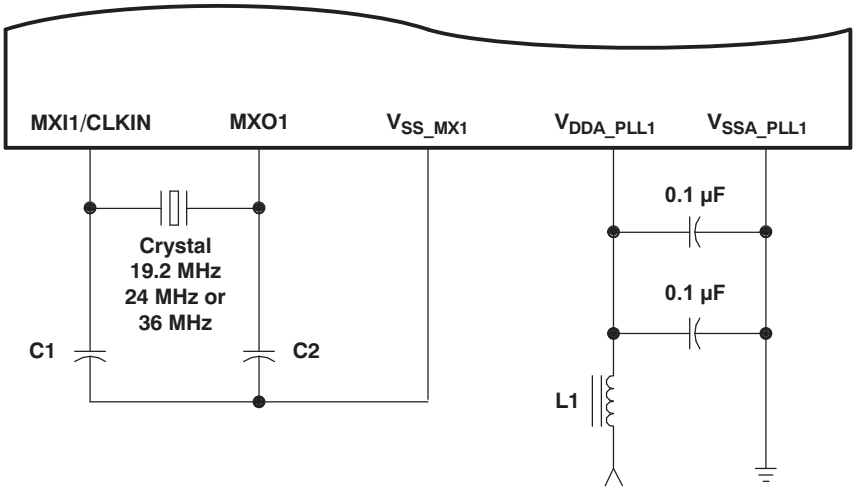

Figure 6-5. MXI1 Oscillator

The load capacitors, C1 and C2, should be chosen such that the equation is satisfied (typical values are C1 = C2 = 10 pF). CL in the equation is the load specified by the crystal manufacturer. All discrete components used to implement the oscillator circuit should be placed as close as possible to the associated oscillator pins (MXI1 and MXO1) and to the V_{SS_MX1} pin.

$$C_L = \frac{C_1 C_2}{(C_1 + C_2)}$$

Table 6-3. Switching Characteristics Over Recommended Operating Conditions for System Oscillator

PARAMETER			MIN	TYP	MAX	UNIT
	Start-up time (from power up until oscillating at stable frequency)				2	ms
	Oscillation frequency			19.2/24/27/36		MHz
	Crystal ESR	19 - 30 MHz			60	Ω
		30 - 36 MHz			40	Ω
	Frequency stability				+/-50	ppm

6.6.2 Clock PLL Electrical Data/Timing (Input and Output Clocks)

Table 6-4. Timing Requirements for MXI1/CLKIN1(1) (2) (3) (see Figure 6-6)

NO.			DEVICE			UNIT
			MIN	TYP	MAX	
1	$t_{c(MXI1)}$	Cycle time, MXI1/CLKIN1	$27.\overline{7}$		$52.08\overline{3}$	ns
2	$t_{w(MXI1H)}$	Pulse duration, MXI1/CLKIN1 high	0.45C		0.55C	ns
3	$t_{w(MXI1L)}$	Pulse duration, MXI1/CLKIN1 low	0.45C		0.55C	ns
4	$t_{t(MXI1)}$	Transition time, MXI1/CLKIN1			.05C	ns
5	$t_{J(MXI1)}$	Period jitter, MXI1/CLKIN1			.02C	ns

(1) The reference points for the rise and fall transitions are measured at V_{IL} MAX and V_{IH} MIN.
(2) C = MXI1/CLKIN1 cycle time in ns. For example, when MXI1/CLKIN1 frequency is 24 MHz use C = $41.\overline{6}$ ns.
(3) tc(MXI1) = $52.08\overline{3}$ ns, tc(MXI1) = $41.\overline{6}$ ns, tc(MXI1) = $37.\overline{037}$ ns, and tc(MXI1) = $27.\overline{7}$ ns are the only supported cycle times for MXI1/CLKIN1.

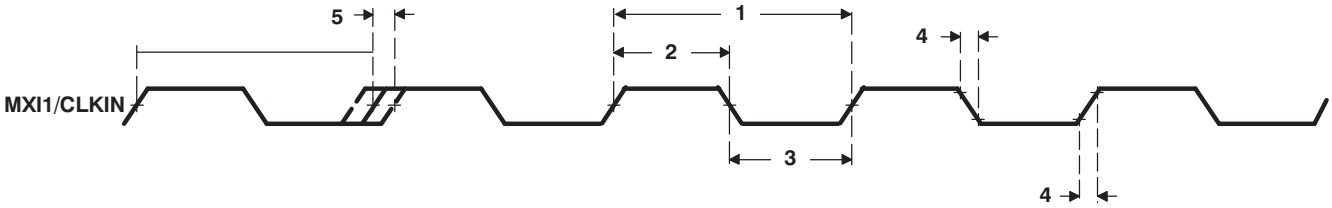

Figure 6-6. MXI1/CLKIN1 Timing

Copyright © 2009–2011, Texas Instruments Incorporated

Table 6-5. Switching Characteristics Over Recommended Operating Conditions for CLKOUT0/CLKOUT1[(1)] [(2)] (see Figure 6-7)

NO.	PARAMETER		DEVICE			UNIT
			MIN	TYP	MAX	
1	$t_{C(CLKOUT0/CLKOUT1)}$	Cycle time, CLKOUT0/CLKOUT1	$27.\overline{7}$			ns
2	$t_{w(CLKOUT0H/CLKOUT1H)}$	Pulse duration, CLKOUT0/CLKOUT1 high	.45P		.55P	ns
3	$t_{w(CLKOUT0L/CLKOUT1L)}$	Pulse duration, CLKOUT0/CLKOUT1 low	.45P		.55P	ns
4	$t_{t(CLKOUT0/CLKOUT1)}$	Transition time, CLKOUT0/CLKOUT1			3	ns
5	$t_{d(MXI1H-CLKOUT0H/CLKOUT1H)}$	Delay time, MXI1/CLKIN1 high to CLKOUT0/CLKOUT1 high	1		8	ns
6	$t_{d(MXI1L-CLKOUT0L/CLKOUT1L)}$	Delay time, MXI1/CLKIN1I low to CLKOUT0/CLKOUT1 low	1		8	ns

(1) The reference points for the rise and fall transitions are measured at V_{OL} MAX and V_{OH}MIN.
(2) P = 1/CLKOUT0/1 clock frequency in nanoseconds (ns). For example, when CLKOUT1 frequency is 24 MHz use P = $41.\overline{6}$ ns.

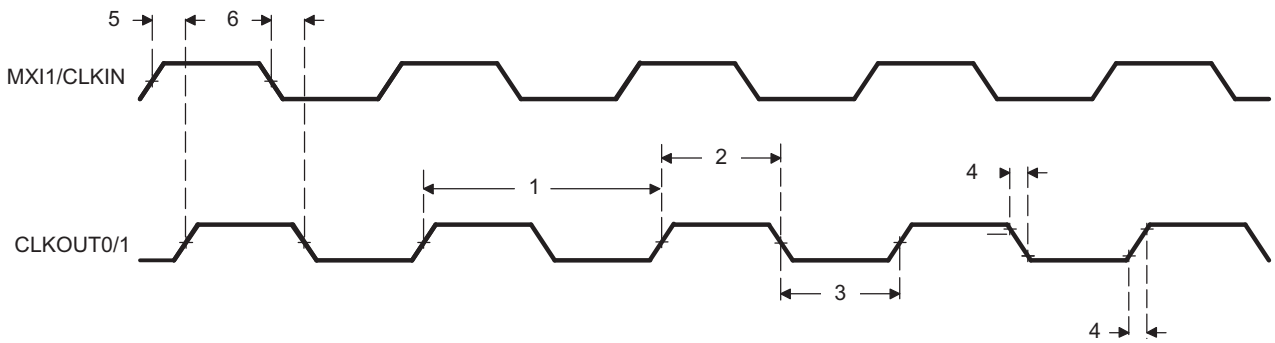

Figure 6-7. CLKOUT1 Timing

Table 6-6. Switching Characteristics Over Recommended Operating Conditions for CLKOUT2[(1)] [(2)] (see Figure 6-8)

NO.	PARAMETER		DEVICE			UNIT
			MIN	TYP	MAX	
1	$t_{C(CLKOUT2)}$	Cycle time, CLKOUT2	20			ns
2	$t_{w(CLKOUT2H)}$	Pulse duration, CLKOUT2 high	.45P		.55P	ns
3	$t_{w(CLKOUT2L)}$	Pulse duration, CLKOUT2 low	.45P		.55P	ns
4	$t_{t(CLKOUT2)}$	Transition time, CLKOUT2			3	ns
5	$t_{d(MXI1H-CLKOUT2H)}$	Delay time, MXI1/CLKIN1 high to CLKOUT2 high	1		8	ns
6	$t_{d(MXI1L-CLKOUT2L)}$	Delay time, MXI1/CLKIN1 low to CLKOUT2 low	1		8	ns

(1) The reference points for the rise and fall transitions are measured at V_{OL} MAX and V_{OH} MIN.
(2) P = 1/CLKOUT2 clock frequency in nanoseconds (ns). For example, when CLKOUT2 frequency is 8 MHz use P = 125 ns.

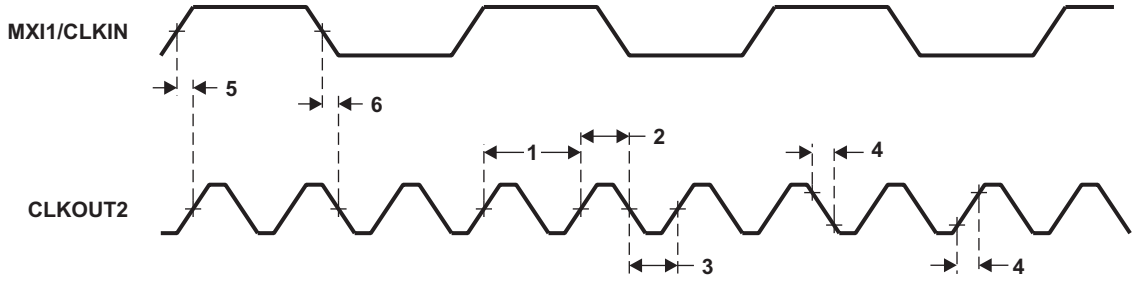

Figure 6-8. CLKOUT2 Timing

6.6.3 PRTCSS Oscillator

The device has an PRTCSS oscillator input/output pair (RTCXI/RTCXO) usable with external crystals or ceramic resonators to provide clock inputs. The optimal frequency for the crystal is 32.768 kHz. The electrical requirements and characteristics are described in this section. Figure 6-9 shows an example circuit.

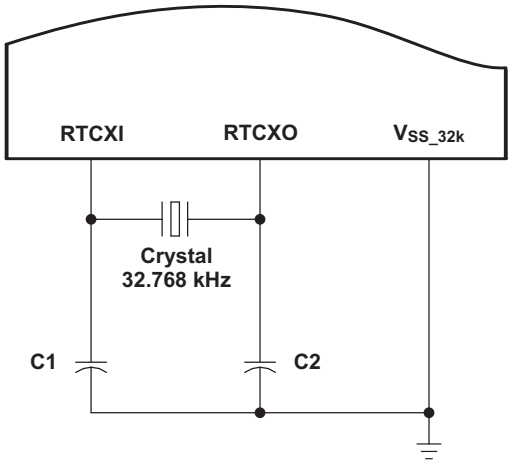

Figure 6-9. RTCXI1 Oscillator

The load capacitors, C1 and C2, should be chosen such that the equation is satisfied (typical values are C1 = C2 = 2 fF). C_L in the equation below is the load specified by the crystal manufacturer. All discrete components used to implement the oscillator circuit should be placed as close as possible to the associated oscillator pins (RTCXI and RTCXO) and to the V_{SS_32K} pin.

$$C_L = \frac{C_1 C_2}{(C_1 + C_2)} \quad (1)$$

6.6.4 PRTCSS Electrical Data/Timing

Table 6-7. Timing Requirements for RTCXI(1) (2) (see Figure 6-6)

NO.			DEVICE			UNIT
			MIN	TYP	MAX	
1	$t_{c(RTCXI)}$	Cycle time, RTCXI		30.5175		µs
2	$t_{w(RTCXIH)}$	Pulse duration, RTCXI high	.45C		.55C	ns
3	$t_{w(RTCXIL)}$	Pulse duration, RTCXI low	.45C		.55C	ns

(1) The reference points for the rise and fall transitions are measured at V_{IL} MAX and V_{IH} MIN.
(2) C = MXI1/CLKIN1 cycle time in ns. For example, when MXI1/CLKIN1 frequency is 24 MHz use C = 41.$\overline{6}$ ns.

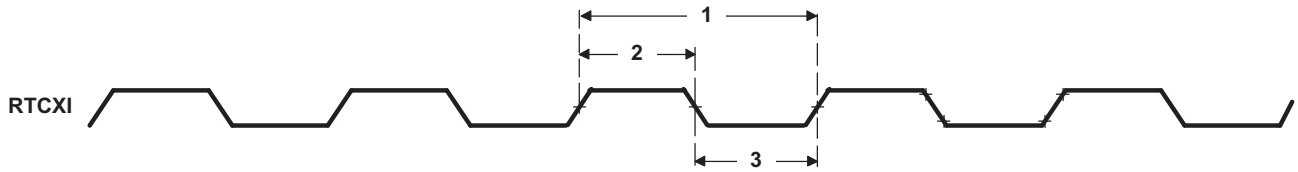

Figure 6-10. RTCXI Timing

Copyright © 2009–2011, Texas Instruments Incorporated

Table 6-8. Switching Characteristics Over Recommended Operating Conditions for RTC Oscillator

PARAMETER		MIN	TYP	MAX	UNIT
	Start-up time (from power up until oscillating at stable frequency)		0.85	2	s
	Oscillation frequency		32.768		kHz
	Crystal ESR			70	kΩ
	Frequency stability			+/- 50	ppm

The load capacitors, C1 and C2, should be chosen such that the equation is satisfied (typical values are C1 = C2 = 2 fF). CL in the equation is the load specified by the crystal manufacturer. All discrete components used to implement the oscillator circuit should be placed as close as possible to the associated oscillator pins (RTCXI and RTCXO) and to the V_{SS_MX1} pin.

6.7 Power Management and Real Time Clock Subsystem (PRTCSS)

The Power Management and Real Time Clock Subsystem (PRTCSS) is used for calendar applications. The PRTCSS has an independent power supply and can remain ON while the rest of the power supply is turned OFF. The PRTCSS supports the following features:

- Real Time Clock (RTC)
  - Simple day counter (Up to 89-years)
  - To generate the Alarm event to check the RTC count
  - 16-bit simple timer
  - Watch-dog timer to generate the event for RTC-Sequencer
- General Purpose I/O with Anti-chattering
  - 3-output pins (PWRCTRO[2:0])
  - 7-In/Output pins (PWRCTRIO[6:0])
- Interrupt
  - 2 RTCSS interrupts (ARMSS and Timer)
  - 7 GPIO interrupts (PWRCTRIO[6:0]

6.7.1 PRTCSS Peripheral Register Description(s)

The following table lists the PRTCSS Interface registers (PRTCIF) and Table 6-10 lists the PRTCSS registers which can only be accessed via the PRTCIF registers, their corresponding acronyms, and device memory locations (offsets). For more details, see the *TMS320DM36x PRTCSS User's Guide* (literature number SPRUFJ0).

Table 6-9. PRTC Interface (PRTCIF) Registers

Offset	Acronym	Register Description
0x0	PID	PRTCIF peripheral ID register
0x4	PRTCIF_CTRL	PRTCIF control register
0x8	PRTCIF_LDATA	PRTCIF access lower data register
0xC	PRTCIF_UDATA	PRTCIF access upper data register
0x10	PRTCIF_INTEN	PRTCIF interrupt enable register
0x14	PRTCIF_INTFLG	PRTCIF interrupt flag register

Table 6-10. Power Management and Real Time Clock Subsystem (PRTCSS) Registers

Offset	Acronym	Register Description
0x0	GO_OUT	Global output pin output data register
0x1	GIO_OUT	Global input/output pin output data register
0x2	GIO_DIR	Global input/output pin direction register
0x3	GIO_IN	Global input/output pin input data register

Table 6-10. Power Management and Real Time Clock Subsystem (PRTCSS) Registers (continued)

Offset	Acronym	Register Description
0x4	GIO_FUNC	Global input/output pin function register
0x5	GIO_RISE_INT_EN	GIO rise interrupt enable register
0x6	GIO_FALL_INT_EN	GIO fall interrupt enable register
0x7	GIO_RISE_INT_FLG	GIO rise interrupt flag register
0x8	GIO_FALL_INT_FLG	GIO fall interrupt flag register
0x9 - 0xA	Reserved	Reserved
0xB	INTC_EXTENA0	EXT interrupt enable 0 register
0xC	INTC_EXTENA1	EXT interrupt enable 1 register
0xD	INTC_FLG0	Event interrupt flag 0 register
0xE	INTC_FLG1	Event interrupt flag 1 register
0x10	RTC_CTRL	RTC control register
0x11	RTC_WDT	Watchdog timer counter register
0x12	RTC_TMR0	Timer counter 0 register
0x13	RTC_TMR1	Timer counter 1 register
0x14	RTC_CCTRL	Calender control register
0x15	RTC_SEC	Seconds register
0x16	RTC_MIN	Minutes register
0x17	RTC_HOUR	Hours register
0x18	RTC_DAY0	Days[[7:0] register
0x19	RTC_DAY1	Days[14:8] register
0x1A	RTC_AMIN	Minutes Alarm register
0x1B	RTC_AHOUR	Hour Alarm register
0x1C	RTC_ADAY0	Days[7:0] Alarm register
0x1D	RTC_ADAY1	Days[14:8] Alarm register
0x20	CLKC_CNT	Clock control register

Copyright © 2009–2011, Texas Instruments Incorporated

6.8 General-Purpose Input/Output (GPIO)

The GPIO peripheral provides general-purpose pins that can be configured as either inputs or outputs. When configured as an output, a write to an internal register can control the state driven on the output pin. When configured as an input, the state of the input is detectable by reading the state of an internal register. In addition, the GPIO peripheral can produce CPU interrupts and EDMA events in different interrupt/event generation modes. The GPIO peripheral provides generic connections to external devices. The GPIO pins are grouped into banks of 16 pins per bank (i.e., bank 0 consists of GPIO [0:15]). There are a total of 7 GPIO banks in the device, because the device has 104 GPIOs. For additional details on GPIO pins voltage level and the associated power supply please see Table 6-11.

Table 6-11. GPIO Pin Voltage Level and Power Supply Reference

Voltage Level	**1.8 V or 3.3 V**			**3.3 V**	**1.8 V**
Power Supply Name	$V_{DD_AEMIF1_18_33}$	$V_{DD_AEMIF2_18_33}$	$V_{DD_ISIF18_33}$	V_{DDS33}	V_{DD18_PRTCSS}
Pin Name	GIO[78:68]	GIO[67]	GIO[103:93]	GIO[92:79]	GIO[110:104]
	GIO[66:56]	GIO[55:52]		GIO[49:0]	
	GIO[51:50]				

The GPIO peripheral supports the following:

- Up to 104 GPIO pins, GPIO[103:0]
- Up to 7 GPIO pins dedicated to the PRTC Subsystem. These pins are labeled as PWRCTRIO[6:0]. Only PWRCTRIO[2:0] are connected to the GPIO module, labeled as GPIO[106:104]. For the PRTCSS module the PWRCTRIO[6:0] pins support input and output functionality but for the GPIO module the GPIO[106:104] pins support input functionality only. For more details please refer to Section 6.7.
- Interrupts:
  - Up to 15 unique GPIO[15:0] interrupts from Bank 0.
  - Up to 3 unique GPIO[106:104] interrupts from Bank 6, dedicated to the PRTC Subsystem. For more details please refer to Section 6.7.
  - Interrupts can be triggered by rising and/or falling edge, specified for each interrupt capable GPIO signal
- DMA events:
  - Up to 15 unique GPIO DMA events from Bank 0
- Set/clear functionality: Firmware writes 1 to corresponding bit position(s) to set or to clear GPIO signal(s). This allows multiple firmware processes to toggle GPIO output signals without critical section protection (disable interrupts, program GPIO, re-enable interrupts, to prevent context switching to anther process during GPIO programming).
- Separate Input/Output registers
- Output register in addition to set/clear so that, if preferred by firmware, some GPIO output signals can be toggled by direct write to the output register(s).
- Output register, when read, reflects output drive status. This, in addition to the input register reflecting pin status, allows wired logic be implemented.

For more detailed information on GPIOs, see the *Documentation Support* section for the General-Purpose Input/Output (GPIO) Reference Guide.

6.8.1 GPIO Peripheral Register Description(s)

Table 6-12 lists the GPIO registers, their corresponding acronyms, and device memory locations (offsets).

Table 6-12. General-Purpose Input/Output (GPIO) Registers

OFFSET	ACRONYM	REGISTER DESCRIPTION
0h	PID	Peripheral Identification Register
8h	BINTEN	GPIO Interrupt Per-Bank Enable Register
GPIO Banks 0 and 1		
10h	DIR01	GPIO Banks 0 and 1 Direction Register
14h	OUT_DATA01	GPIO Banks 0 and 1 Output Data Register
18h	SET_DATA01	GPIO Banks 0 and 1 Set Data Register
1Ch	CLR_DATA01	GPIO Banks 0 and 1 Clear Data Register
20h	IN_DATA01	GPIO Banks 0 and 1 Input Data Register
24h	SET_RIS_TRIG	GPIO Set Rising Edge Interrupt Register
28h	CLR_RIS_TRIG	GPIO Clear Rising Edge Interrupt Register
2Ch	SET_FAL_TRIG	GPIO Set Falling Edge Interrupt Register
30h	CLR_FAL_TRIG	GPIO Clear Falling Edge Interrupt Register
34h	INTSTAT	GPIO Interrupt Status Register
GPIO Banks 2 and 3		
38h	DIR23	GPIO Banks 2 and 3 Direction Register
3Ch	OUT_DATA23	GPIO Banks 2 and 3 Output Data Register
40h	SET_DATA23	GPIO Banks 2 and 3 Set Data Register
44h	CLR_DATA23	GPIO Banks 2 and 3 Clear Data Register
48h	IN_DATA23	GPIO Banks 2 and 3 Input Data Register
GPIO Bank 4 and 5		
60h	DIR45	GPIO Bank 4 and 5 Direction Register
64h	OUT_DATA45	GPIO Bank 4 and 5 Output Data Register
68h	SET_DATA45	GPIO Bank 4 and 5 Set Data Register
6Ch	CLR_DATA45	GPIO Bank 4 and 5 Clear Data Register
70h	IN_DATA45	GPIO Bank 4 and 5 Input Data Register
GPIO Bank 6		
88h	DIR6	GPIO Bank 6 Direction Register
8Ch	OUT_DATA6	GPIO Bank 6 Output Data Register
90h	SET_DATA6	GPIO Bank 6 Set Data Register
94h	CLR_DATA6	GPIO Bank 6 Clear Data Register
98h	IN_DATA6	GPIO Bank 6 Input Data Register

6.8.2 GPIO Peripheral Input/Output Electrical Data/Timing

Table 6-13. Timing Requirements for GPIO Inputs (see Figure 6-11)

NO.			DEVICE		UNIT
			MIN	MAX	
1	$t_{w(GPIH)}$	Pulse duration, GPIx high	12P (1)		ns
2	$t_{w(GPIL)}$	Pulse duration, GPIx low	12P (1)		ns

(1) P = PLLC1.SYSCLK4 period, where SYSCLK4 is an output clock of PLLC1. For more details, see Section 3.3, *Device Clocking*.

 Copyright © 2009–2011, Texas Instruments Incorporated

Table 6-14. Switching Characteristics Over Recommended Operating Conditions for GPIO Outputs (see Figure 6-11)

NO.	PARAMETER		DEVICE		UNIT
			MIN	MAX	
3	$t_{w(GPOH)}$	Pulse duration, GPOx high	36P[(1)] - 8		ns
4	$t_{w(GPOL)}$	Pulse duration, GPOx low	36P[(1)] - 8		ns

(1) P = PLLC1.SYSCLK4 period, where SYSCLK4 is an output clock of PLLC1. For more details, see Section 3.3, *Device Clocking*.

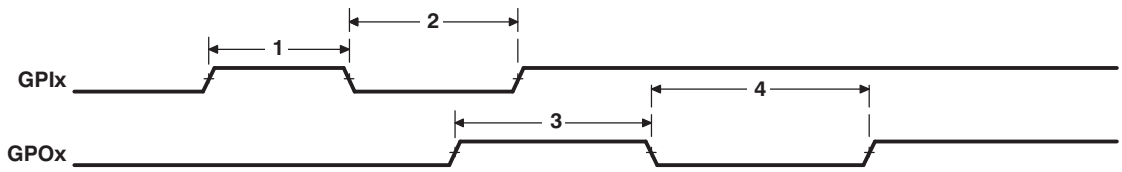

Figure 6-11. GPIO Port Timing

6.8.3 GPIO Peripheral External Interrupts Electrical Data/Timing

Table 6-15. Timing Requirements for External Interrupts/EDMA Events[(1)] (see Figure 6-12)

NO.			DEVICE		UNIT
			MIN	MAX	
1	$t_{w(ILOW)}$	Width of the external interrupt pulse low	2P[(2)]		ns
2	$t_{w(IHIGH)}$	Width of the external interrupt pulse high	2P[(2)]		ns

(1) The pulse width given is sufficient to generate an interrupt or an EDMA event. However, if a user wants the device to recognize the GPIO changes through software polling of the GPIO register, the GPIO duration must be extended to allow the device enough time to access the GPIO register through the internal bus.
(2) P = PLLC1.SYSCLK4 period, where SYSCLK4 is an output clock of PLLC1. For more details, see Section 3.3, *Device Clocking*.

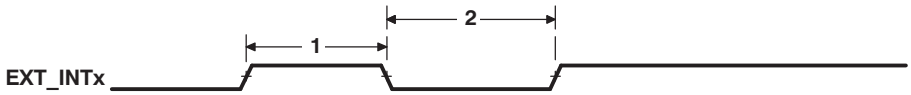

Figure 6-12. GPIO External Interrupt Timing

6.9 EDMA Controller

The EDMA controller handles all data transfers between memories and the device slave peripherals on the device. These are summarized as follows:

- Transfer to/from on-chip memories
  - ARM program/data RAM
  - HDVICP Coprocessor memory
  - MPEG/JPEG Coprocessor memory
- Transfer to/from external storage
  - DDR2 / mDDR SDRAM
  - Asynchronous EMIF
  - OneNAND flash
  - NAND flash, NOR flash
  - Smart Media, SD, MMC, xD media storage

- Transfer to/from peripherals
  - McBSP
  - SPI
  - I2C
  - PWM
  - RTO
  - GPIO
  - Timer/WDT
  - UART
  - MMC/SD

The EDMA Controller consists of two major blocks: the Transfer Controller (TC) and the Channel Controller (CC). The CC is a highly flexible Channel Controller that serves as the user interface and event interface for the EDMA system. The CC supports 64-event channels and 8 QDMA channels. The CC consists of a scalable Parameter RAM (PaRAM) that supports flexible ping-pong, circular buffering, channel-chaining, auto-reloading, and memory protection.

The EDMA Channel Controller has the following features:

- Fully orthogonal transfer description
  - Three transfer dimensions
  - A-synchronized transfers: one dimension serviced per event
  - AB- synchronized transfers: two dimensions serviced per event
  - Independent indexes on source and destination
  - Chaining feature allows 3-D transfer based on single event
- Flexible transfer definition
  - Increment and constant addressing modes
  - Linking mechanism allows automatic PaRAM set update
  - Chaining allows multiple transfers to execute with one event
- Interrupt generation for:
  - DMA completion
  - Error conditions
- Debug visibility
  - Queue watermarking/threshold
  - Error and status recording to facilitate debug
- 64 DMA channels
  - Event synchronization
  - Manual synchronization (CPU(s) write to event set register)
  - Chain synchronization (completion of one transfer chains to next)
- 8 QDMA channels
  - QDMA channels are triggered automatically upon writing to a PaRAM set entry
  - Support for programmable QDMA channel to PaRAM mapping
- 256 PaRAM sets
  - Each PaRAM set can be used for a DMA channel, QDMA channel, or link set (remaining)
- Four transfer controllers/event queues. The system-level priority of these queues is user programmable
- 16 event entries per event queue
- External events (for example, McBSP TX Evt and RX Evt)

The EDMA Transfer Controller has the following features:

- Four transfer controllers
- 64-bit wide read and write ports per channel

Copyright © 2009–2011, Texas Instruments Incorporated

- Up to four in-flight transfer requests (TR)
- Programmable priority level
- Supports two dimensional transfers with independent indexes on source and destination (EDMA Channel Controller manages the 3rd dimension)
- Support for increment and constant addressing modes
- Interrupt and error support

Parameter RAM: Each EDMA is specified by an eight word (32-byte) parameter table contained in Parameter RAM (PaRAM) within the CC. The device provides 256 PaRAM entries, one for each of the 64 DMA channels and for 8 QDMA / Linked DMA entries.

DMA Channels: Can be triggered by: " External events (for example, McBSP TX Evt and RX Evt), " Software writing a '1' to the given bit location, or channel, of the Event Set register, or, " Chaining to other DMAs.

QDMA: The Quick DMA (QDMA) function is contained within the CC. The device implements 8 QDMA channels. Each QDMA channel has a selectable PaRAM entry used to specify the transfer. A QDMA transfer is submitted immediately upon writing of the "trigger" parameter (as opposed to the occurrence of an event as with EDMA). The QDMA parameter RAM may be written by any Config bus master through the Config Bus and by DMAs through the Config Bus bridge.

QDMA Channels: Triggered by a configuration bus write to a designated 'QDMA trigger word'. QDMAs allow a minimum number of linear writes (optimized for GEM IDMA feature) to be issued to the CC to force a series of transfers to take place.

6.9.1 EDMA Channel Synchronization Events

The EDMA supports up to 64 EDMA channels which service peripheral devices and external memory. Table 6-16 lists the source of EDMA synchronization events associated with each of the programmable EDMA channels. For the device, the association of an event to a channel is fixed; each of the EDMA channels has one specific event associated with it. These specific events are captured in the EDMA event registers (ER, ERH) even if the events are disabled by the EDMA event enable registers (EER, EERH). For more detailed information on the EDMA module and how EDMA events are enabled, captured, processed, linked, chained, and cleared, etc., see the *Document Support* section for the Enhanced Direct Memory Access (EDMA) Controller Reference Guide.

Table 6-16. EDMA Channel Synchronization Events(1) (2)

EDMA CHANNEL	EVENT NAME	EVENT DESCRIPTION
0	TIMER3: TEVT6	Timer 3 Interrupt (TEVT6) Event
1	TIMER3 TEVT7	Timer 3 Interrupt (TEVT7) Event
2	McBSP: XEVT or VoiceCodec : VCREVT	McBSP Transmit Event or Voice Codec Transmit Event
3	McBSP :REVT or VoiceCodec : VCREVT	McBSP Receive Event or Voice Codec Receive Event
4	VPSS: EVT1	VPSS Event 1
5	VPSS: EVT2	VPSS Event 2
6	VPSS: EVT3	VPSS Event 3
7	VPSS: EVT4	VPSS Event 4
8	TIMER2: TEVT4	Timer 2 interrupt (TEVT4) Event

(1) In addition to the events shown in this table, each of the 64 channels can also be synchronized with the transfer completion or intermediate transfer completion events. For more detailed information on EDMA event-transfer chaining, see the *Document Support* section for the Enhanced Direct Memory Access (EDMA) Controller Reference Guide.
(2) The total number of EDMA events exceeds 64, which is the maximum value of the EDMA module. Therefore, several events are multiplexed and you must use the register EDMA_EVTMUX in the System Control Module to select the event source for multiplexed events. Refer to the *TMS320DM36x DMSoC ARM Subsystem* Reference Guide (literature number SPRUFG5) for more information on the System Control Module register EDMA_EVTMUX.

Copyright © 2009–2011, Texas Instruments Incorporated

Table 6-16. EDMA Channel Synchronization Events[(1) (2)] (continued)

EDMA CHANNEL	EVENT NAME	EVENT DESCRIPTION
9	TIMER2: TEVT5	Timer 2 interrupt (TEVT5) Event
10	SPI2: SPI2XEVT	SPI2 Transmit Event
11	SPI2: SPI2REVT	SPI2 Receive Event
12	MJCP : IMX0INT or HDVICP : HDVICP_ARMINT	MPEG/JPEG Coprocessor IMX0INT Event or High Definition Video Image Coprocessor HDVICP_ARMINT Event
13	MJCP : SEQINT	MPEG/JPEG Coprocessor SEQINT Event
14	SPI1: SPI1XEVT	SPI1 Transmit Event
15	SPI1: SPI1REVT	SPI1 Receive Event
16	SPI0: SPI0XEVT	SP0I Transmit Event
17	SPI0: SPI0REVT	SPI0 Receive Event
18	UART0: URXEVT0 or SPI3: SPI3XEVT	UART 0 Receive Event
19	UART0: UTXEVT0 or SPI3: SPI3REVT	UART 0 Transmit Event
20	UART1: URXEVT1	UART 1 Receive Event
21	UART1: UTXEVT1	UART 1 Transmit Event
22	TIMER4 : TEVT8	Timer 4 (TEVT8) Event
23	TIMER4 : TEVT9	Timer 4 (TEVT9) Event
24	RTOEVT	Real Time Out Module Event
25	GPIO: GPINT9	GPIO 9 Event
26	MMC0RXEVT	MMC/SD0 Receive Event
27	MMC0TXEVT	MMC/SD0 Transmit Event
28	I2C : ICREVT	I2C Receive Event
29	I2C : ICXEVT	I2C Transmit Event
30	MMC1RXEVT	MMC/SD1 Receive Event
31	MMC1TXEVT	MMC/SD1 Transmit Event
32	GPIO :GPINT0	GPIO 0 Event
33	GPIO: GPINT1	GPIO 1 Event
34	GPIO :GPINT2	GPIO 2 Event
35	GPIO :GPINT3	GPIO 3 Event
36	GPIO :GPINT4	GPIO 4 Event
37	GPIO :GPINT5	GPIO 5 Event
38	GPIO :GPINT6	GPIO 6 Event
39	GPIO :GPINT7	GPIO 7 Event
40	GPIO : GPINT10 or EMACRXTHREESH	GPIO 10 Event or EMAC EMACRXTHREESH
41	GPIO : GPINT11 or EMACRXPULSE	GPIO 11 Event or EMAC EMACRXPULSE
42	GPIO : GPINT12 or EMACTXPULSE	GPIO 12 Event or EMAC EMACTXPULSE
43	GPIO : GPINT13 or EMACMISCPULSE	GPIO 13 Event or EMAC EMACMISCPULSE
44	GPIO : GPINT14	GPIO 14 Event
45	GPIO : GPINT15	GPIO 15 Event
46	ADC : ADINT	Analog to Digital Converter Interrupt Event
47	GPIO : GPINT8	GPIO 8 Event
48	TIMER0 : TEVT0	Timer 0 (TEVT0) Event
49	TIMER0: TEVT1	Timer 1 (TEVT1) Event

 Copyright © 2009–2011, Texas Instruments Incorporated

Table 6-16. EDMA Channel Synchronization Events[(1) (2)] (continued)

EDMA CHANNEL	EVENT NAME	EVENT DESCRIPTION
50	TIMER1: TEVT2	Timer 2(TEVT2) Event
51	TIMER1: TEVT3	Timer 3(TEVT3) Event
52	PWM0	PWM 0 Event
53	PWM1 or MJCP : IMX1INT	PWM 1 Event or MJCP IMX1INT interrupt
54	PWM2 or MJCP : NSFINT	PWM 2 Event or MJCP NSFINT interrupt
55	PWM3 or HDVICP(6) : CP_UNDEF	MPEG/JPEG Coprocessor PWM 3 Event or High Definition Video Image Coprocessor CP_UNDEF Event
56	MJCP : VLCDINT or HDVICP(5) : CP_ECDCMP	MPEG/JPEG Coprocessor VLCDINT Event or High Definition Video Image Coprocessor CP_ECDCMP Event
57	MJCP : BIMINT or HDVICP(8) : CP_ME	MPEG/JPEG Coprocessor BIMINT Event or High Definition Video Image Coprocessor CP_ME Event
58	MJCP : DCTINT or HDVICP(1) : CP_CALC	MPEG/JPEG Coprocessor DCTINT Event or High Definition Video Image Coprocessor CP_CALC Event
59	MJCP : QIQINT or HDVICP(7) : CP_IPE	MPEG/JPEG Coprocessor QIQINT Event or High Definition Video Image Coprocessor CP_IPE Event
60	MJCP : BPSINT or HDVICP(2) : CP_BS	MPEG/JPEG Coprocessor BPSINT Event or High Definition Video Image Coprocessor CP_BS Event
61	MJCP : VLCDERRINT or HDVICP(0) : CP_LPF	MPEG/JPEG Coprocessor VLCDERRINT Event or High Definition Video Image Coprocessor CP_LPF Event
62	MJCP : RCNTINT or HDVICP(3) : CP_MC	MPEG/JPEG Coprocessor RCNTINT Event or High Definition Video Image Coprocessor CP_MC Event
63	MJCP : COPCINT or HDVICP(4) : CP_ECDEND	MPEG/JPEG Coprocessor COPCINT Event or High Definition Video Image Coprocessor CP_ECDEND Event

6.9.2 EDMA Peripheral Register Description(s)

Table 6-17 lists the EDMA registers, their corresponding acronyms, and device memory locations (offsets).

Table 6-17. EDMA Registers

Offset	Acronym	Register Description
00h	PID	Peripheral Identification Register
04h	CCCFG	EDMA3CC Configuration Register
Global Registers		
0200h	QCHMAP0	QDMA Channel 0 Mapping Register
0204h	QCHMAP1	QDMA Channel 1 Mapping Register
0208h	QCHMAP2	QDMA Channel 2 Mapping Register
020Ch	QCHMAP3	QDMA Channel 3 Mapping Register
0210h	QCHMAP4	QDMA Channel 4 Mapping Register
0214h	QCHMAP5	QDMA Channel 5 Mapping Register
0218h	QCHMAP6	QDMA Channel 6 Mapping Register
021Ch	QCHMAP7	QDMA Channel 7 Mapping Register
0240h	DMAQNUM0	DMA Queue Number Register 0
0244h	DMAQNUM1	DMA Queue Number Register 1
0248h	DMAQNUM2	DMA Queue Number Register 2
024Ch	DMAQNUM3	DMA Queue Number Register 3
0250h	DMAQNUM4	DMA Queue Number Register 4
0254h	DMAQNUM5	DMA Queue Number Register 5
0258h	DMAQNUM6	DMA Queue Number Register 6
025Ch	DMAQNUM7	DMA Queue Number Register 7

Copyright © 2009–2011, Texas Instruments Incorporated

Table 6-17. EDMA Registers (continued)

Offset	Acronym	Register Description
0260h	QDMAQNUM	QDMA Queue Number Register
0284h	QUEPRI	Queue Priority Register
0300h	EMR	Event Missed Register
0304h	EMRH	Event Missed Register High
0308h	EMCR	Event Missed Clear Register
030Ch	EMCRH	Event Missed Clear Register High
0310h	QEMR	QDMA Event Missed Register
0314h	QEMCR	QDMA Event Missed Clear Register
0318h	CCERR	EDMA3CC Error Register
031Ch	CCERRCLR	EDMA3CC Error Clear Register
0320h	EEVAL	Error Evaluate Register
0340h	DRAE0	DMA Region Access Enable Register for Region 0
0344h	DRAEH0	DMA Region Access Enable Register High for Region 0
...		
0350h	DRAE2	DMA Region Access Enable Register for Region 2
0354h	DRAEH2	DMA Region Access Enable Register High for Region 2
0360h	DRAE4	DMA Region Access Enable Register for Region 4
0364h	DRAEH4	DMA Region Access Enable Register High for Region 4
0368h	DRAE5	DMA Region Access Enable Register for Region 5
036Ch	DRAEH5	DMA Region Access Enable Register High for Region 5
0380h	QRAE0	QDMA Region Access Enable Register for Region 0
0388h	QRAE2	QDMA Region Access Enable Register for Region 2
0390h	QRAE4	
0394h	QRAE5	
0400h-047Ch	Q0E0-Q1E15	Event Queue Entry Registers Q0E0-Q1E15
0600h	QSTAT0	Queue 0 Status Register
0604h	QSTAT1	Queue 1 Status Register
0608h	QSTAT2	Queue 2 Status Register
060Ch	QSTAT3	Queue 3 Status Register
0620h	QWMTHRA	Queue Watermark Threshold A Register
0640h	CCSTAT	EDMA3CC Status Register
Global Channel Registers		
1000h	ER	Event Register
1004h	ERH	Event Register High
1008h	ECR	Event Clear Register
100Ch	ECRH	Event Clear Register High
1010h	ESR	Event Set Register
1014h	ESRH	Event Set Register High
1018h	CER	Chained Event Register
101Ch	CERH	Chained Event Register High
1020h	EER	Event Enable Register
1024h	EERH	Event Enable Register High
1028h	EECR	Event Enable Clear Register
102Ch	EECRH	Event Enable Clear Register High
1030h	EESR	Event Enable Set Register
1034h	EESRH	Event Enable Set Register High
1038h	SER	Secondary Event Register

 Copyright © 2009–2011, Texas Instruments Incorporated

Table 6-17. EDMA Registers (continued)

Offset	Acronym	Register Description
103Ch	SERH	Secondary Event Register High
1040h	SECR	Secondary Event Clear Register
1044h	SECRH	Secondary Event Clear Register High
1050h	IER	Interrupt Enable Register
1054h	IERH	Interrupt Enable Register High
1058h	IECR	Interrupt Enable Clear Register
105Ch	IECRH	Interrupt Enable Clear Register High
1060h	IESR	Interrupt Enable Set Register
1064h	IESRH	Interrupt Enable Set Register High
1068h	IPR	Interrupt Pending Register
106Ch	IPRH	Interrupt Pending Register High
1070h	ICR	Interrupt Clear Register
1074h	ICRH	Interrupt Clear Register High
1078h	IEVAL	Interrupt Evaluate Register
1080h	QER	QDMA Event Register
1084h	QEER	QDMA Event Enable Register
1088h	QEECR	QDMA Event Enable Clear Register
108Ch	QEESR	QDMA Event Enable Set Register
1090h	QSER	QDMA Secondary Event Register
1094h	QSECR	QDMA Secondary Event Clear Register
Shadow Region 0 Channel Registers		
2000h	ER	Event Register
2004h	ERH	Event Register High
2008h	ECR	Event Clear Register
200Ch	ECRH	Event Clear Register High
2010h	ESR	Event Set Register
2014h	ESRH	Event Set Register High
2018h	CER	Chained Event Register
201Ch	CERH	Chained Event Register High
2020h	EER	Event Enable Register
2024h	EERH	Event Enable Register High
2028h	EECR	Event Enable Clear Register
202Ch	EECRH	Event Enable Clear Register High
2030h	EESR	Event Enable Set Register
2034h	EESRH	Event Enable Set Register High
2038h	SER	Secondary Event Register
203Ch	SERH	Secondary Event Register High
2040h	SECR	Secondary Event Clear Register
2044h	SECRH	Secondary Event Clear Register High
2050h	IER	Interrupt Enable Register
2054h	IERH	Interrupt Enable Register High
2058h	IECR	Interrupt Enable Clear Register
205Ch	IECRH	Interrupt Enable Clear Register High
2060h	IESR	Interrupt Enable Set Register
2064h	IESRH	Interrupt Enable Set Register High
2068h	IPR	Interrupt Pending Register
206Ch	IPRH	Interrupt Pending Register High

Table 6-17. EDMA Registers (continued)

Offset	Acronym	Register Description
2070h	ICR	Interrupt Clear Register
2074h	ICRH	Interrupt Clear Register High
2078h	IEVAL	Interrupt Evaluate Register
2080h	QER	QDMA Event Register
2084h	QEER	QDMA Event Enable Register
2088h	QEECR	QDMA Event Enable Clear Register
208Ch	QEESR	QDMA Event Enable Set Register
2090h	QSER	QDMA Secondary Event Register
2094h	QSECR	QDMA Secondary Event Clear Register
Shadow Region 1 Channel Registers		
2200h	ER	Event Register
2204h	ERH	Event Register High
2208h	ECR	Event Clear Register
220Ch	ECRH	Event Clear Register High
2210h	ESR	Event Set Register
2214h	ESRH	Event Set Register High
2218h	CER	Chained Event Register
221Ch	CERH	Chained Event Register High
2220h	EER	Event Enable Register
2224h	EERH	Event Enable Register High
2228h	EECR	Event Enable Clear Register
222Ch	EECRH	Event Enable Clear Register High
2230h	EESR	Event Enable Set Register
2234h	EESRH	Event Enable Set Register High
2238h	SER	Secondary Event Register
223Ch	SERH	Secondary Event Register High
2240h	SECR	Secondary Event Clear Register
2244h	SECRH	Secondary Event Clear Register High
2250h	IER	Interrupt Enable Register
2254h	IERH	Interrupt Enable Register High
2258h	IECR	Interrupt Enable Clear Register
225Ch	IECRH	Interrupt Enable Clear Register High
2260h	IESR	Interrupt Enable Set Register
2264h	IESRH	Interrupt Enable Set Register High
2268h	IPR	Interrupt Pending Register
226Ch	IPRH	Interrupt Pending Register High
2270h	ICR	Interrupt Clear Register
2274h	ICRH	Interrupt Clear Register High
2278h	IEVAL	Interrupt Evaluate Register
2280h	QER	QDMA Event Register
2284h	QEER	QDMA Event Enable Register
2288h	QEECR	QDMA Event Enable Clear Register
228Ch	QEESR	QDMA Event Enable Set Register
2290h	QSER	QDMA Secondary Event Register
2294h	QSECR	QDMA Secondary Event Clear Register
2400h-2494h	—	Shadow Region 2 Channel Registers
2600h-2694h	—	Shadow Region 3 Channel Registers

 Copyright © 2009–2011, Texas Instruments Incorporated

Table 6-17. EDMA Registers (continued)

Offset	Acronym	Register Description
2800h-2894h		Shadow Region 4 Channel Registers
2A00h-2A94h		Shadow Region 5 Channel Registers
2C00h-2C94h		Shadow Region 6 Channel Registers
2E00h-2E94h		Shadow Region 7 Channel Registers
4000h-4FFFh	—	Parameter RAM (PaRAM)

Table 6-18 shows an abbreviation of the set of registers which make up the parameter set for each of 512 EDMA events. Each of the parameter register sets consist of 8 32-bit word entries. Table 6-19 shows the parameter set entry registers with relative memory address locations within each of the parameter sets.

Table 6-18. EDMA Parameter Set RAM

HEX ADDRESS RANGE	DESCRIPTION
0x01C0 4000 - 0x01C0 401F	Parameters Set 0 (8 32-bit words)
0x01C0 4020 - 0x01C0 403F	Parameters Set 1 (8 32-bit words)
0x01C0 4040 - 0x01C0 405F	Parameters Set 2 (8 32-bit words)
0x01C0 4060 - 0x01C0 407F	Parameters Set 3 (8 32-bit words)
0x01C0 4080 - 0x01C0 409F	Parameters Set 4 (8 32-bit words)
0x01C0 40A0 - 0x01C0 40BF	Parameters Set 5 (8 32-bit words)
...	...
0x01C0 7FC0 - 0x01C0 7FDF	Parameters Set 510 (8 32-bit words)
0x01C0 7FE0 - 0x01C0 7FFF	Parameters Set 511 (8 32-bit words)

Table 6-19. Parameter Set Entries

HEX OFFSET ADDRESS WITHIN THE PARAMETER SET	ACRONYM	PARAMETER ENTRY
0x0000	OPT	Option
0x0004	SRC	Source Address
0x0008	A_B_CNT	A Count, B Count
0x000C	DST	Destination Address
0x0010	SRC_DST_BIDX	Source B Index, Destination B Index
0x0014	LINK_BCNTRLD	Link Address, B Count Reload
0x0018	SRC_DST_CIDX	Source C Index, Destination C Index
0x001C	CCNT	C Count

Copyright © 2009–2011, Texas Instruments Incorporated

6.10 External Memory Interface (EMIF)

The device supports several memory and external device interfaces, including:

- Asynchronous EMIF (AEMIF) for interfacing to SRAM.
  - OneNAND flash memories
  - NAND flash memories
  - NOR flash memories
- DDR2/mDDR Memory Controller for interfacing to SDRAM.

6.10.1 Asynchronous EMIF (AEMIF)

The EMIF supports the following features:

- SRAM, NOR flash, etc. on up to 2 asynchronous chip selects addressable up to 16MB each
- Supports 8-bit or 16-bit data bus widths
- Programmable asynchronous cycle timings
- Supports extended wait mode
- Supports Select Strobe mode

6.10.1.1 NAND (NAND, SmartMedia, xD)

The NAND features of the EMIF are as follows:

- NAND flash on up to 2 asynchronous chip selects
- 8 and 16-bit data bus widths
- Programmable cycle timings
- Performs 1-bit and 4-bit ECC calculation
- NAND Mode also supports SmartMedia/SSFDC (Solid State Floppy Disk Controller) and xD memory cards

6.10.1.2 OneNAND

The OneNAND features supported are as follows.

- NAND flash on up to 2 asynchronous chip selects
- Only 16-bit data bus widths
- Supports asynchronous writes and reads
- Supports synchronous reads with continuous linear burst mode (Does not support synchronous reads with wrap burst modes)
- Programmable cycle timings for each chip select in asynchronous mode

6.10.1.3 EMIF Peripheral Register Descriptions

Table 6-20 lists the EDMA registers, their corresponding acronyms, and device memory locations (offsets).

Table 6-20. External Memory Interface (EMIF) Registers

OFFSET	ACRONYM	REGISTER DESCRIPTION
04h	AWCCR	Asynchronous Wait Cycle Configuration Register
10h	A1CR	Asynchronous 1 Configuration Register (CE0 space)
14h	A2CR	Asynchronous 2 Configuration Register (CE1 space)
40h	EIRR	EMIF Interrupt Raw Register
44h	EIMR	EMIF Interrupt Mask Register

Table 6-20. External Memory Interface (EMIF) Registers (continued)

OFFSET	ACRONYM	REGISTER DESCRIPTION
48h	EIMSR	EMIF Interrupt Mask Set Register
4Ch	EIMCR	EMIF Interrupt Mask Clear Register
5Ch	ONENANDCTL	OneNAND Flash Control Register
60h	NANDFCR	NAND Flash Control Register
64h	NANDFSR	NAND Flash Status Register
70h	NANDF1ECC	NAND Flash 1-Bit ECC Register 1 (CE0 Space)
74h	NANDF2ECC	NAND Flash 1-Bit ECC Register 2 (CE1 Space)
BCh	NAND4BITECCLOAD	NANDFlash 4-Bit ECC Load Register
C0h	NAND4BITECC1	NAND Flash 4-Bit ECC Register 1
C4h	NAND4BITECC2	NAND Flash 4-Bit ECC Register 2
C8h	NAND4BITECC3	NAND Flash 4-Bit ECC Register 3
CCh	NAND3BITECC4	NAND Flash 4-Bit ECC Register 4
D0h	NANDERRADD1	NAND Flash 4-Bit ECC Error Address Register 1
D4h	NANDERRADD2	NAND Flash 4-Bit ECC Error Address Register 2
D8h	NANDERRVAL1	NAND Flash 4-Bit ECC Error Value Register 1
DCh	NANDERRVAL2	NAND Flash 4-Bit ECC Error Value Register 2

Copyright © 2009–2011, Texas Instruments Incorporated

6.10.1.4 AEMIF Electrical Data/Timing

Table 6-21. Timing Requirements for Asynchronous Memory Cycles for AEMIF Module[(1)] (see Figure 6-13 and Figure 6-14)

NO.			DEVICE			UNIT
			MIN	NOM	MAX	
READS and WRITES						
2	$t_{w(EM_WAIT)}$	Pulse duration, EM_WAIT assertion and deassertion	2E			ns
READS						
12	$t_{su(EMDV-EMOEH)}$	Setup time, EM_D[15:0] valid before $\overline{EM_OE}$ high	4			ns
13	$t_{h(EMOEH-EMDIV)}$	Hold time, EM_D[15:0] valid after $\overline{EM_OE}$ high	3			ns
14	$t_{su(EMOEL-EMWAIT)}$	Setup time EM_WAIT asserted before $\overline{EM_OE}$ high[(2)]		4E + 3		ns
READS (OneNAND Synchronous Burst Read)						
30	$t_{su(EMDV-EMCLKH)}$	Setup time, EM_D[15:0] valid before EM_CLK high	4			ns
31	$t_{h(EMCLKH-EMDIV)}$	Hold time, EM_D[15:0] valid after EM_CLK high	3			ns
WRITES						
28	$t_{su(EMWEL-EMWAIT)}$	Setup time EM_WAIT asserted before $\overline{EM_WE}$ high[(2)]		4E + 3		ns

(1) E=2*PLL1C SYSCLK4 period in ns. See Section 3.3 for more information.
(2) Setup before end of STROBE phase (if no extended wait states are inserted) by which EM_WAIT must be asserted to add extended wait states. Figure 6-15 and Figure 6-16 describe EMIF transactions that include extended wait states inserted during the STROBE phase. However, cycles inserted as part of this extended wait period should not be counted; the 4E requirement is to the start of where the HOLD phase would begin if there were no extended wait cycles.

Table 6-22. Switching Characteristics Over Recommended Operating Conditions for Asynchronous Memory Cycles for AEMIF Module[(1) (2) (3)] (see Figure 6-13 and Figure 6-14)

NO.	PARAMETER		DEVICE			UNIT
			MIN	TYP	MAX	
READS and WRITES						
1	$t_{d(TURNAROUND)}$	Turn around time		(TA)*E		ns
READS						
3	$t_{c(EMRCYCLE)}$	EMIF read cycle time (EW = 0)		(RS+RST+RH + 3)*E		ns
		EMIF read cycle time (EW = 1)		(RS+RST+RH+3)*E		ns
4	$t_{su(EMCEL-EMOEL)}$	Output setup time, $\overline{EM_CE[1:0]}$ low to $\overline{EM_OE}$ low (SS = 0)		(RS + 1)*E + 3		ns
		Output setup time, $\overline{EM_CE[1:0]}$ low to $\overline{EM_OE}$ low (SS = 1)		(RS + 1)*E		ns
5	$t_{h(EMOEH-EMCEH)}$	Output hold time, $\overline{EM_OE}$ high to $\overline{EM_CE[1:0]}$ high (SS = 0)		(RH + 1)*E		ns
		Output hold time, $\overline{EM_OE}$ high to $\overline{EM_CE[1:0]}$ high (SS = 1)		(RH + 1)*E		ns
6	$t_{su(EMBAV-EMOEL)}$	Output setup time, EM_BA[1:0] valid to $\overline{EM_OE}$ low		(RS + 1)*E		ns
7	$t_{h(EMOEH-EMBAIV)}$	Output hold time, $\overline{EM_OE}$ high to EM_BA[1:0] invalid		(RH + 1)*E		ns

(1) TA = Turn around, RS = Read setup, RST = Read strobe, RH = Read hold, WS = Write setup, WST = Write strobe, WH = Write hold, MEWC = Maximum external wait cycles. These parameters are programmed via the Asynchronous Bank and Asynchronous Wait Cycle Configuration Registers. These support the following range of values: TA[4-1], RS[16-1], RST[64-1], RH[8-1], WS[16-1], WST[64-1], WH[8-1], and MEW[1-256]. See the *TMS320DM36x DMSoC Asynchronous External Memory Interface User's Guide* (SPRUFI1) for more information.
(2) E=2*PLL1C SYSCLK4 period in ns. See Section 3.3 for more information.
(3) EWC = external wait cycles determined by EM_WAIT input signal. EWC supports the following range of values EWC[256-1]. Note that the maximum wait time before timeout is specified by bit field MEWC in the Asynchronous Wait Cycle Configuration Register. See the *TMS320DM36x DMSoC Asynchronous External Memory Interface User's Guide* (SPRUFI1) for more information.

Table 6-22. Switching Characteristics Over Recommended Operating Conditions for Asynchronous Memory Cycles for AEMIF Module[(1) (2) (3)] (see Figure 6-13 and Figure 6-14) (continued)

NO.	PARAMETER		DEVICE			UNIT
			MIN	TYP	MAX	
8	$t_{su(EMBAV-EMOEL)}$	Output setup time, EM_A[21:0] valid to $\overline{EM_OE}$ low		(RS + 1)*E		ns
9	$t_{h(EMOEH-EMAIV)}$	Output hold time, $\overline{EM_OE}$ high to EM_A[21:0] invalid		(RH + 1)*E		ns
10	$t_{w(EMOEL)}$	$\overline{EM_OE}$ active low width (EW = 0)		(RST)*E		ns
		$\overline{EM_OE}$ active low width (EW = 1)		(RST+(EWC*16))*E		ns
11	$t_{d(EMWAITH-EMOEH)}$	Delay time from EM_WAIT deasserted to $\overline{EM_OE}$ high		4E		ns
READS (OneNAND Synchronous Burst Read)						
32	$f_{c(EM_CLK)}$	Frequency, EM_CLK			66	MHz
33	$t_{c(EM_CLK)}$	Cycle time, EM_CLK	15.$\overline{15}$			ns
34	$t_{su(EM_ADVV-EM_CLKH)}$	Output setup time, EM_ADV valid before EM_CLK high	2E - 2.5			ns
35	$t_{h(EM_CLKH-EM_ADVIV)}$	Output hold time, EM_CLK high to EM_ADV invalid	2E + 3			ns
36	$t_{su(EM_AV-EM_CLKH)}$	Output setup time, EM_A[21:0]/EM_BA[1] valid before EM_CLK high	2E - 2.5			ns
37	$t_{h(EM_CLKH-EM_AIV)}$	Output hold time, EM_CLK high to EM_A[21:0]/EM_BA[1] invalid	2E + 3			ns
38	$t_{w(EM_CLKH)}$	Pulse duration, EM_CLK high	5.05			ns
39	$t_{w(EM_CLKL)}$	Pulse duration, EM_CLK low	5.05			ns
WRITES						
15	$t_{c(EMWCYCLE)}$	EMIF write cycle time (EW = 0)	(WS + WST + WH + TA + 4) * E - 3		(WS + WST + WH + TA + 4) * E + 3	ns
		EMIF write cycle time (EW = 1)	(WS + WST + WH + TA + 4) * E - 3		(WS + WST + WH + TA + 4) * E + 3	ns
16	$t_{su(EMCEL-EMWEL)}$	Output setup time, $\overline{EM_CE[1:0]}$ low to $\overline{EM_WE}$ low (SS = 0)	(WS+1) * E - 3			ns
		Output setup time, $\overline{EM_CE[1:0]}$ low to $\overline{EM_WE}$ low (SS = 1)	(WS+1) * E - 3			ns
17	$t_{h(EMWEH-EMCEH)}$	Output hold time, $\overline{EM_WE}$ high to $\overline{EM_CE[1:0]}$ high (SS = 0)	(WH+1) * E - 3			ns
		Output hold time, $\overline{EM_WE}$ high to $\overline{EM_CE[1:0]}$ high (SS = 1)	(WH+1) * E - 3			ns
20	$t_{su(EMBAV-EMWEL)}$	Output setup time, EM_BA[1:0] valid to $\overline{EM_WE}$ low	(WS+1) * E - 3			ns
21	$t_{h(EMWEH-EMBAIV)}$	Output hold time, $\overline{EM_WE}$ high to EM_BA[1:0] invalid	(WH+1) * E - 3			ns
22	$t_{su(EMAV-EMWEL)}$	Output setup time, EM_A[21:0] valid to $\overline{EM_WE}$ low	(WS+1) * E - 3			ns
23	$t_{h(EMWEH-EMAIV)}$	Output hold time, $\overline{EM_WE}$ high to EM_A[21:0] invalid	(WH+1) * E - 3			ns
24	$t_{w(EMWEL)}$	$\overline{EM_WE}$ active low width (EW = 0)	(WST+1) * E - 3			ns
		$\overline{EM_WE}$ active low width (EW = 1)	(WST+1) * E - 3			ns
25	$t_{d(EMWAITH-EMWEH)}$	Delay time from EM_WAIT deasserted to $\overline{EM_WE}$ high			4E + 3	ns
26	$t_{su(EMDV-EMWEL)}$	Output setup time, EM_D[15:0] valid to $\overline{EM_WE}$ low	(WS+1) * E - 3			ns
27	$t_{h(EMWEH-EMDIV)}$	Output hold time, $\overline{EM_WE}$ high to EM_D[15:0] invalid	(WH+1) * E - 3			ns

Copyright © 2009–2011, Texas Instruments Incorporated

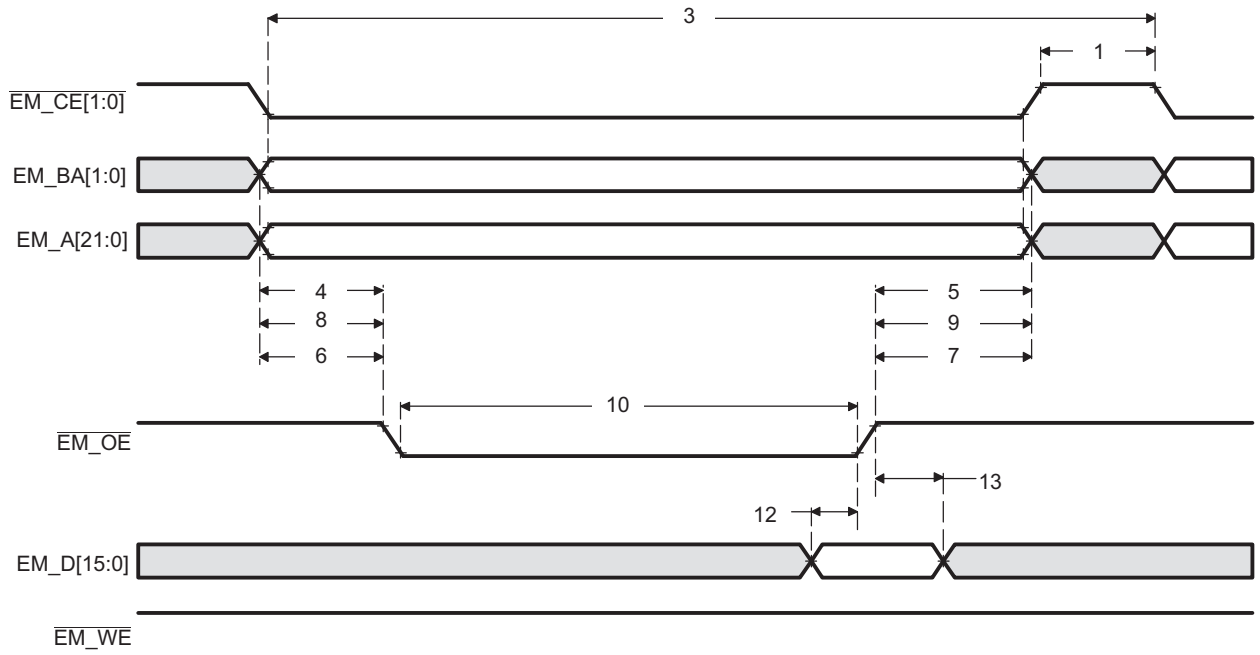

Figure 6-13. Asynchronous Memory Read Timing for EMIF

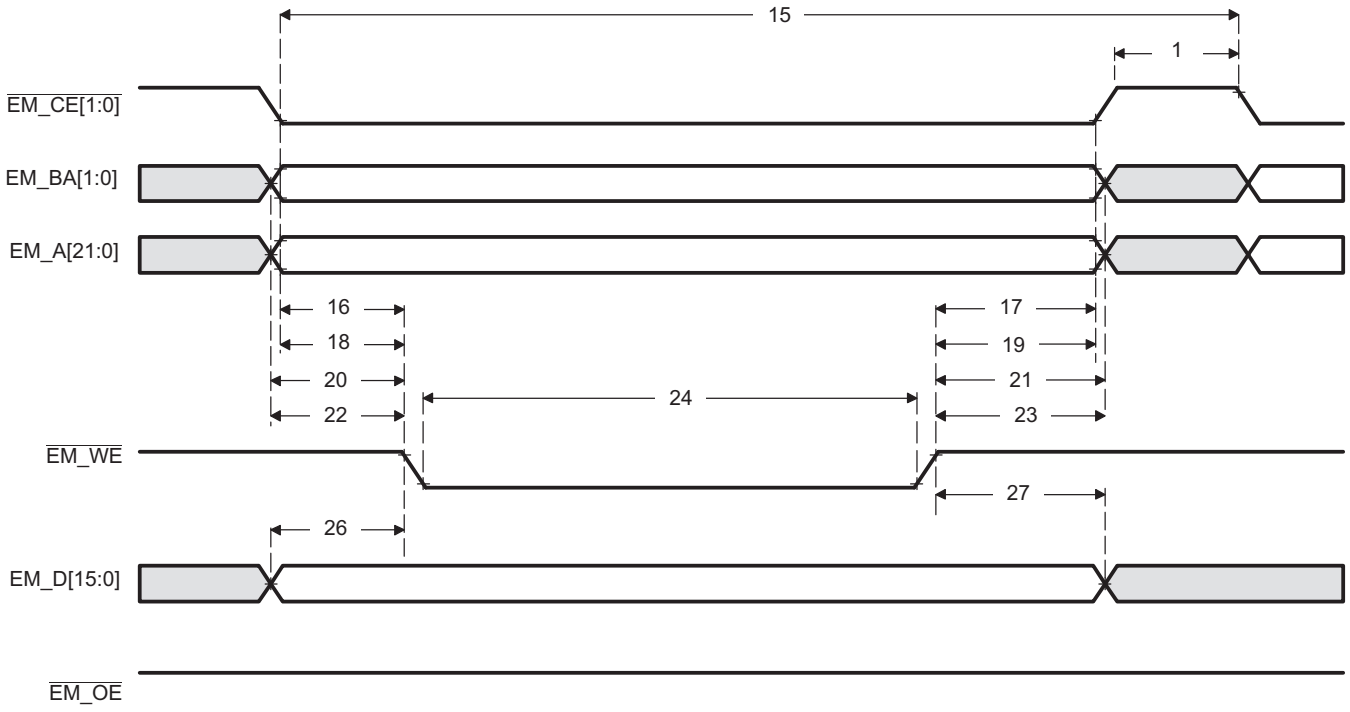

Figure 6-14. Asynchronous Memory Write Timing for EMIF

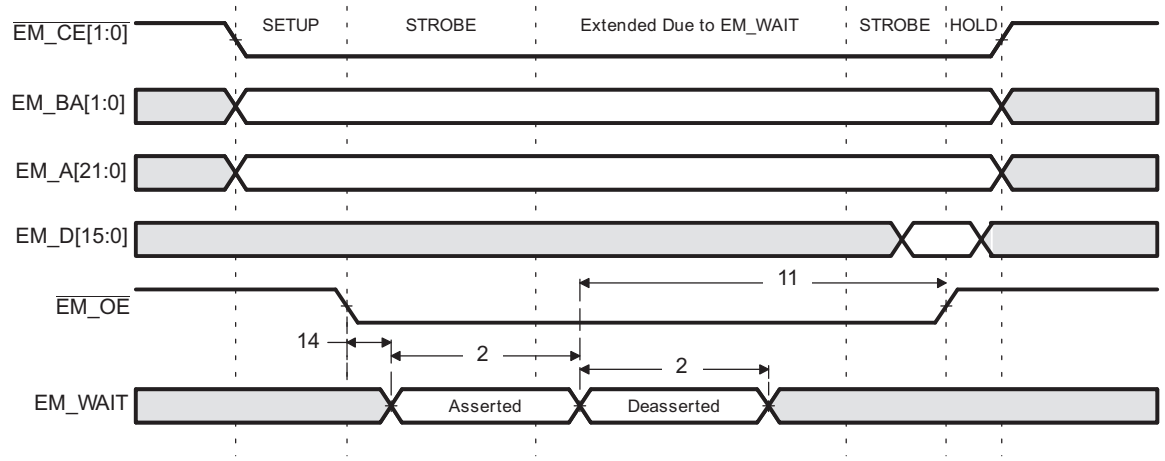

Figure 6-15. EM_WAIT Read Timing Requirements

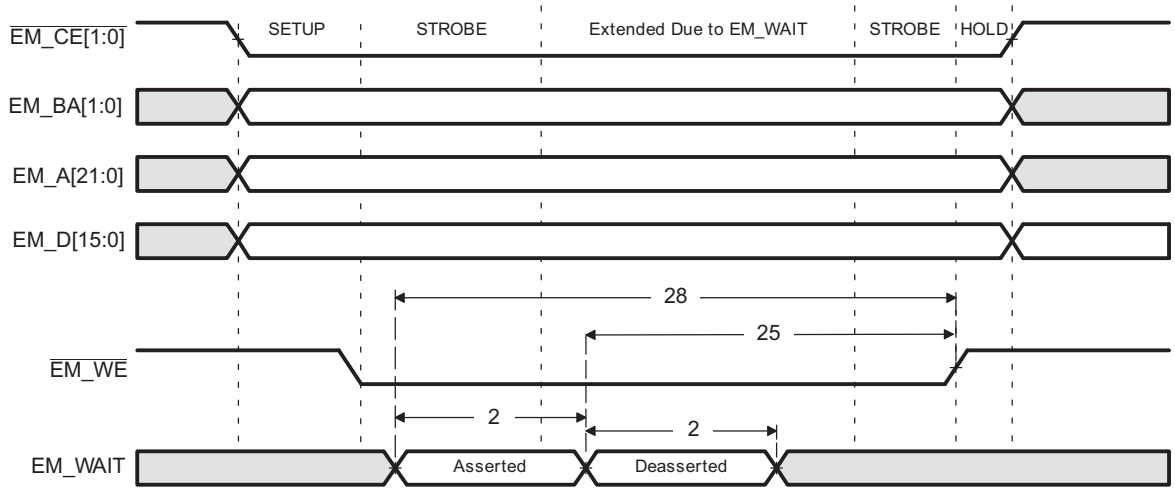

Figure 6-16. EM_WAIT Write Timing Requirements

Copyright © 2009–2011, Texas Instruments Incorporated

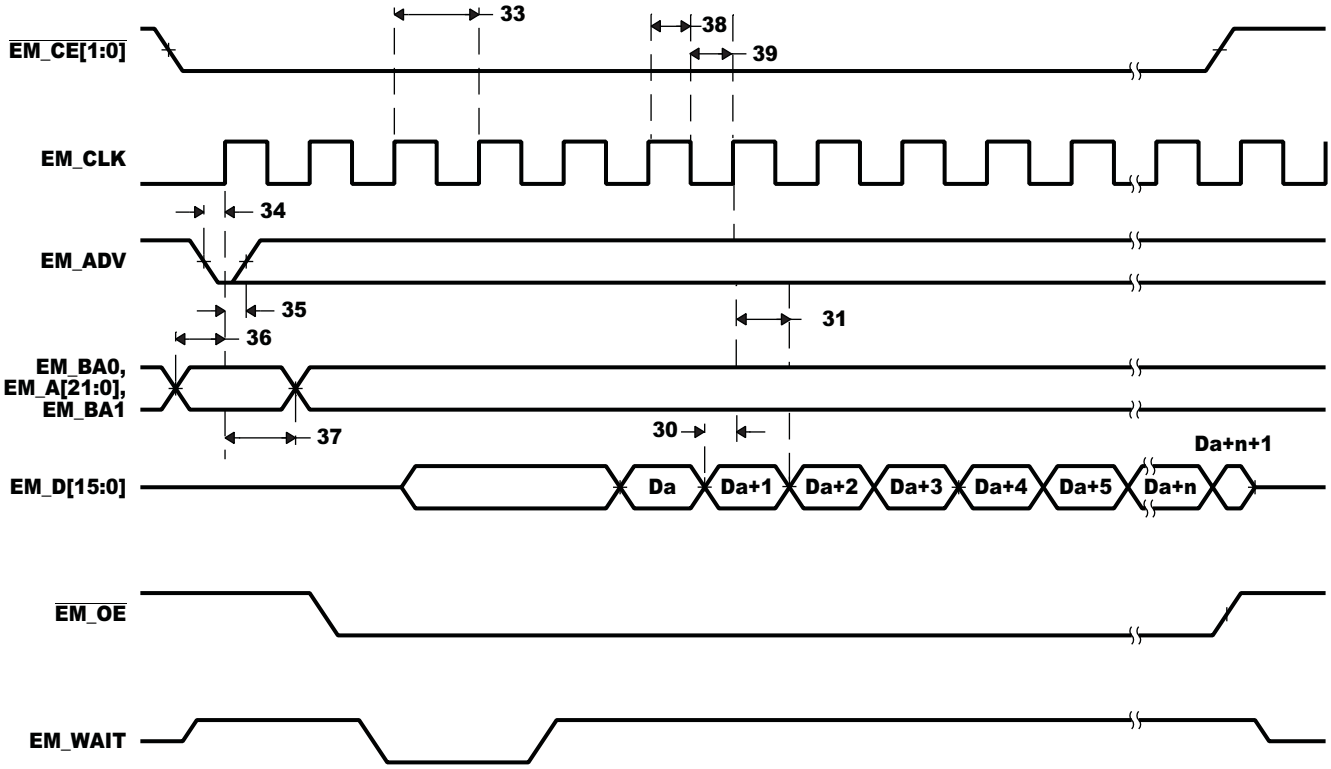

Figure 6-17. Synchronous OneNAND Flash Read Timing

6.10.2 DDR2/mDDR Memory Controller

The DDR2 / mDDR Memory Controller is a dedicated interface to DDR2 / mDDR SDRAM. It supports JESD79D-2A standard compliant DDR2 SDRAM devices and compliant Mobile DDR SDRAM devices. DDR2 / mDDR SDRAM plays a key role in a device-based system. Such a system is expected to require a significant amount of high-speed external memory for all of the following functions:

- Buffering of input image data from sensors or video sources
- Intermediate buffering for processing/resizing of image data in the VPFE
- Numerous OSD display buffers
- Intermediate buffering for large raw Bayer data image files while performing image processing functions
- Buffering for intermediate data while performing video encode and decode functions
- Storage of executable code for the ARM

The DDR2 / mDDR Memory Controller supports the following features:

- JESD79D-2A standard compliant DDR2 SDRAM
- Mobile DDR SDRAM
- 256 MByte memory space
- Data bus width 16 bits
- CAS latencies:
  - DDR2: 2, 3, 4, and 5
  - mDDR: 2 and 3
- Internal banks:
  - DDR2: 1, 2, 4, and 8
  - mDDR: 1, 2, and 4
- Burst length: 8
- Burst type: sequential
- 1 CS signal
- Page sizes: 256, 512, 1024, and 2048
- SDRAM autoinitialization
- Self-refresh mode
- Partial array self-refresh (for mDDR)
- Power down mode
- Prioritized refresh
- Programmable refresh rate and backlog counter
- Programmable timing parameters
- Little endian

For details on the DDR2 Memory Controller, see the *TMS320DM36x DMSoC DDR2/mDDR Memory Controller User's Guide* (literature number SPRUFI2).

 Copyright © 2009–2011, Texas Instruments Incorporated

6.10.3 DDR2 Memory Controller Electrical Data/Timing

Table 6-23. Switching Characteristics Over Recommended Operating Conditions for DDR2 Memory Controller(1) (2)(see)

NO.	PARAMETER			MIN	MAX	UNIT
1	$t_{f(DDR_CLK)}$	Frequency, DDR_CLK	173-DDR2 (supported for 216-MHz device)	125	173	MHz
			216-DDR2 (supported for 270-MHz device)	125	216	
			270-DDR2 (supported for 300-MHz device)	125	270	
			mDDR (supported for all devices)	90	168	

(1) DDR_CLK = PLLC1.SYSCLK7/2 or PLLC2.SYSCLK3/2.
(2) The PLL2 Controller ***must*** be programmed such that the resulting DDR_CLK clock frequency is within the specified range.

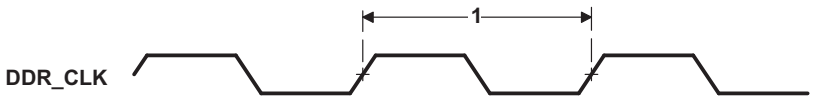

Figure 6-18. DDR2 Memory Controller Clock Timing

6.10.3.1 DDR2/mDDR Interface

This section provides the timing specification for the DDR2/mDDR interface as a PCB design and manufacturing specification. The design rules constrain PCB trace length, PCB trace skew, signal integrity, cross-talk, and signal timing. These rules, when followed, result in a reliable DDR2/mDDR memory system without the need for a complex timing closure process. For more information regarding guidelines for using this DDR2 specification, *Understanding TI's PCB Routing Rule-Based DDR2 Timing Specification* (SPRAAV0).

6.10.3.1.1 DDR2/mDDR Interface Schematic

Figure 6-19 shows the DDR2/mDDR interface schematic for a single-memory DDR2/mDDR system. The dual-memory system shown in Figure 6-20. Pin numbers for the device can be obtained from the pin description section.

6.10.3.1.2 Compatible JEDEC DDR2/mDDR Devices

Table 6-24 shows the parameters of the JEDEC DDR2/mDDR devices that are compatible with this interface. Generally, the DDR2/mDDR interface is compatible with x16 DDR2/mDDR devices.

The device also supports JEDEC DDR2/mDDR x8 devices in the dual chip configuration. In this case, one chip supplies the upper byte and the second chip supplies the lower byte. Addresses and most control signals are shared just like regular dual chip memory configurations.

Table 6-24. Compatible JEDEC DDR2/mDDR Devices

No.	Parameter	Min	Max	Unit	Notes
1	JEDEC DDR2/mDDR Device Speed Grade	DDR2-400 (for 173MHz DDR2)			See Notes (1), (2)
		mDDR-400 (for 168MHz mDDR)			See Notes (1), (3)
		DDR2-533 (for 216MHz DDR2)			See Notes (1), (2)
		DDR2-667 (for 270MHz DDR2)			See Notes (1), (2)
2	JEDEC DDR2/mDDR Device Bit Width	x8	x16	Bits	
3	JEDEC DDR2/mDDR Device Count	1	2	Devices	See Note (4)

(1) Higher DDR2/mDDR speed grades are supported due to inherent JEDEC DDR2/mDDR backwards compatibility.
(2) Used for DDR2.
(3) Used for mobile DDR.
(4) Supported configurations are one 16-bit DDR2/mDDR memory or two 8-bit DDR2/mDDR memories.

6.10.3.1.3 PCB Stack Up

The minimum stack up required for routing the device is a six layer stack as shown in Table 6-25. Additional layers may be added to the PCB stack up to accommodate other circuitry or to reduce the size of the PCB footprint.

Table 6-25. Minimum PCB Stack Up

Layer	Type	Description
1	Signal	Top Routing Mostly Horizontal
2	Plane	Ground
3	Plane	Power
4	Signal	Internal Routing
5	Plane	Ground
6	Signal	Bottom Routing Mostly Vertical

Copyright © 2009–2011, Texas Instruments Incorporated

Complete stack up specifications are provided below.

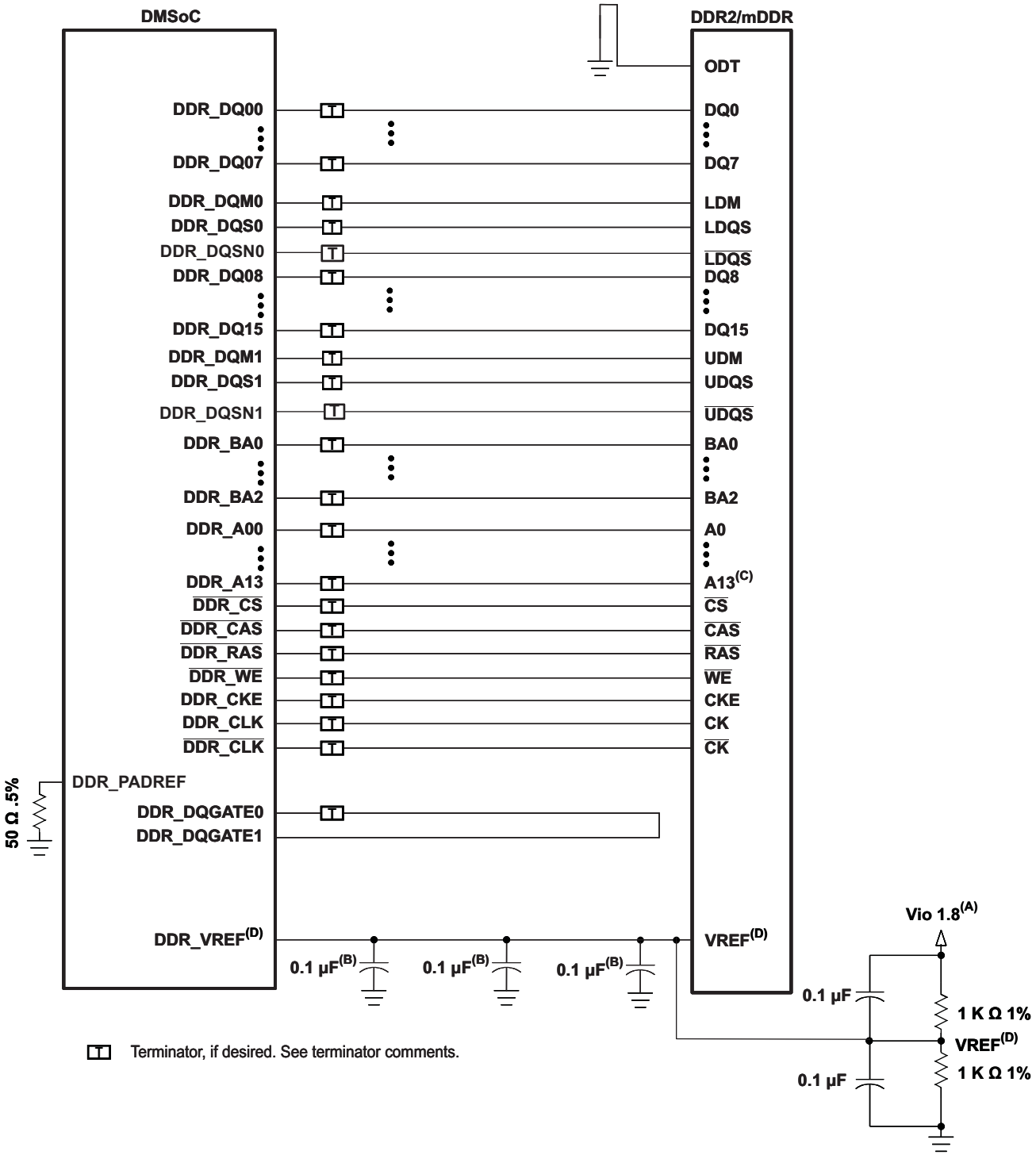

A. Vio 1.8 is the power supply for the DDR2/mDDR memories and the DM36x DDR2/mDDR interface.
B. One of these capacitors can be eliminated if the divider and its capacitors are placed near a device VREF pin. In the Case of mobile DDR, these capacitors can be eliminated completely.
C. When present, A13 signals should be connected.
D. VREF applies in the case of DDR2 memories. For mDDR the DMSoC DDR_VREF pin still needs to be connected to the divider circuit.

Figure 6-19. DDR2/mDDR Single-Memory High Level Schematic

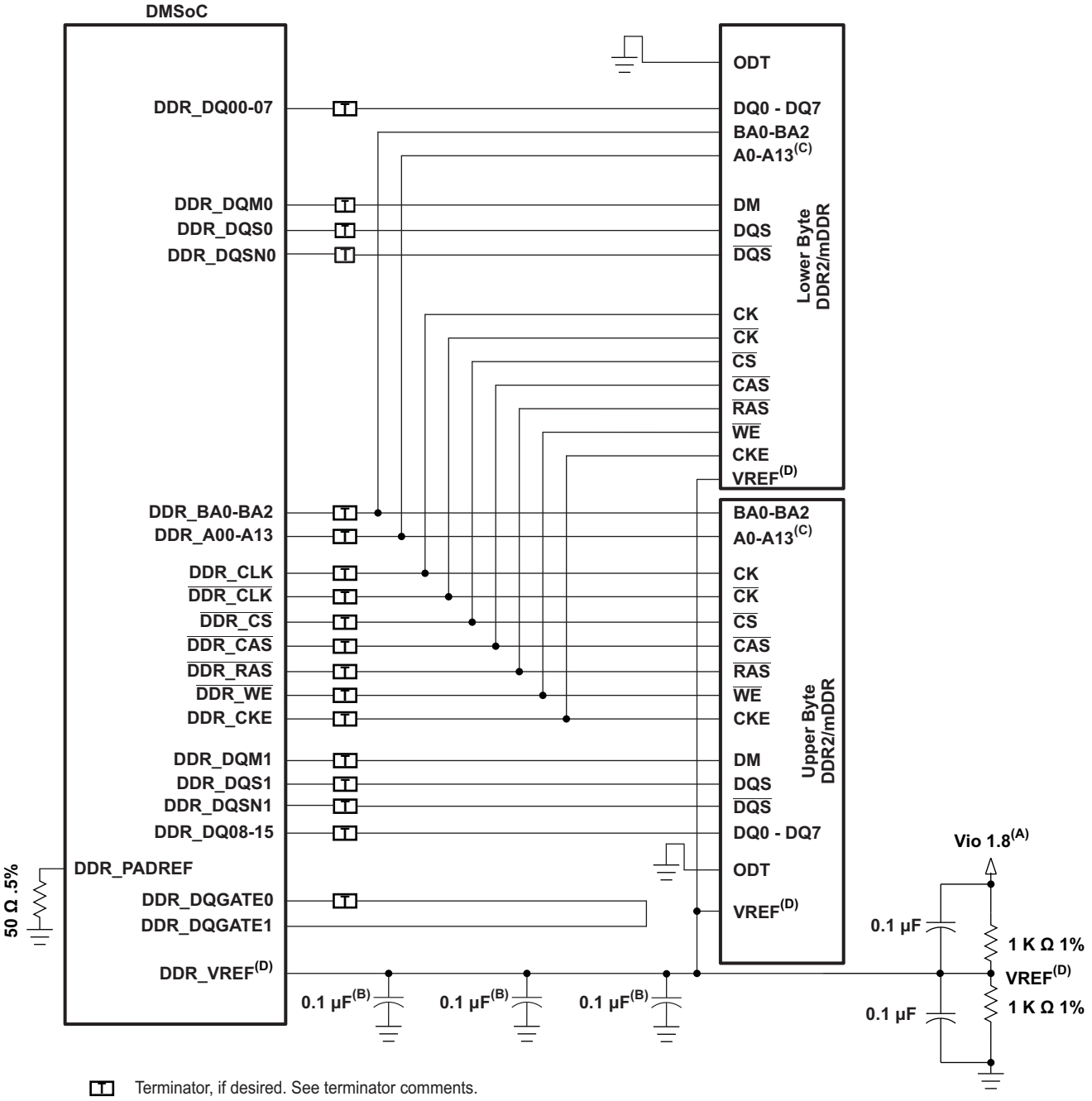

T Terminator, if desired. See terminator comments.

A. Vio 1.8 is the power supply for the DDR2/mDDR memories and the DM36x DDR2/mDDR interface.
B. One of these capacitors can be eliminated if the divider and its capacitors are placed near a device VREF pin. In the Case of mobile DDR, these capacitors can be eliminated completely.
C. When present, A13 signals should be connected.
D. VREF applies in the case of DDR2 memories. For mDDR the DMSoC DDR_VREF pin still needs to be connected to the divider circuit.

Figure 6-20. DDR2/mDDR Dual-Memory High Level Schematic

Copyright © 2009–2011, Texas Instruments Incorporated

Table 6-26. PCB Stack Up Specifications(1)

No.	Parameter	Min	Typ	Max	Unit	Notes
1	PCB Routing/Plane Layers		6			
2	Signal Routing Layers		3			
3	Full ground layers under DDR2/mDDR routing Region	2				
4	Number of ground plane cuts allowed within DDR routing region			0		
5	Number of ground reference planes required for each DDR2/mDDR routing layer	1				
6	Number of layers between DDR2/mDDR routing layer and reference ground plane			0		
7	PCB Routing Feature Size		4		Mils	
8	PCB Trace Width w		4		Mils	
9	DMSoC Device BGA pad size		0.3		mm	
10	DDR2/mDDR Device BGA pad size					See Note (2)
11	Single Ended Impedance, Zo	50		75	Ω	
12	Impedance Control	Z-5	Z	Z+5	Ω	See Note (3)

(1) Consult the PCB fabricator to determine their preference for escape via size.
(2) Please refer to the DDR2/mDDR device manufacturer documentation for the DDR2/mDDR device BGA pad size.
(3) Z is the nominal singled ended impedance selected for the PCB specified by item 12.

6.10.3.1.4 Placement

Figure 6-21 shows the required placement for the device as well as the DDR2/mDDR devices. The dimensions for Figure 6-21 are defined in Table 6-27. The placement does not restrict the side of the PCB that the devices are mounted on. The ultimate purpose of the placement is to limit the maximum trace lengths and allow for proper routing space. For single-memory DDR2/mDDR systems, the second DDR2/mDDR device is omitted from the placement.

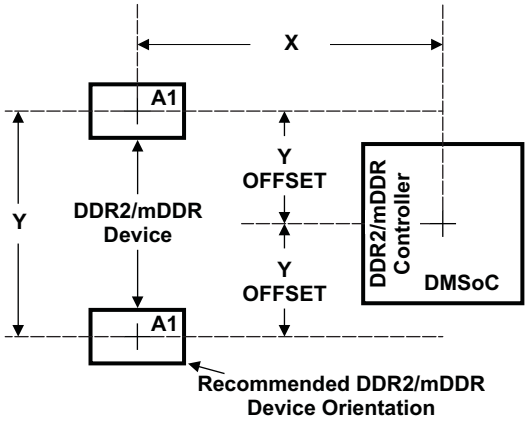

Figure 6-21. DM365 and DDR2/mDDR Device Placement

Table 6-27. Placement Specifications

No.	Parameter	Min	Max	Unit	Notes
1	X		1750	Mils	See Notes (1), (2)
2	Y		1280	Mils	See Notes (1), (2)
3	Y Offset		650	Mils	See Notes (1). (2), (3)
4	DDR2/mDDR Keepout Region				See Note (4)
5	Clearance from non-DDR2/mDDR signal to DDR2/mDDR Keepout Region	4		w	See Note (5)

(1) See Figure 6-19 for dimension definitions.
(2) Measurements from center of DMSoC device to center of DDR2/mDDR device.
(3) For single memory systems it is recommended that Y Offset be as small as possible.
(4) DDR2/mDDR Keepout region to encompass entire DDR2/mDDR routing area
(5) Non-DDR2/mDDR signals allowed within DDR2/mDDR keepout region provided they are separated from DDR2/mDDR routing layers by a ground plane.

6.10.3.1.5 DDR2/mDDR Keep Out Region

The region of the PCB used for the DDR2/mDDR circuitry must be isolated from other signals. The DDR2/mDDR keep out region is defined for this purpose and is shown in Figure 6-22. The size of this region varies with the placement and DDR routing. Additional clearances required for the keep out region are shown in Table 6-27.

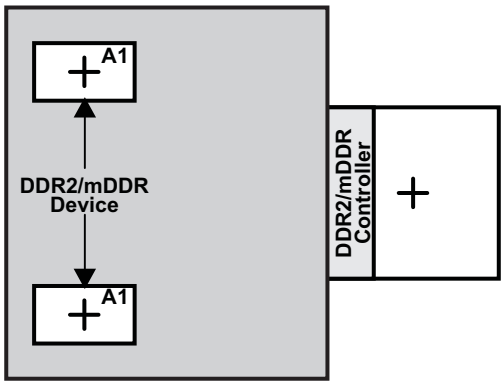

Region should encompass all DDR2/mDDR circuitry and varies depending on placement. Non-DDR2/mDDR signals should not be routed on the DDR signal layers within the DDR2/mDDR keep out region. Non-DDR2/mDDR signals may be routed in the region provided they are routed on layers separated from DDR2/mDDR signal layers by a ground layer. No breaks should be allowed in the reference ground layers in this region. In addition, the 1.8 V power plane should cover the entire keep out region.

Figure 6-22. DDR2/mDDR Keepout Region

Copyright © 2009–2011, Texas Instruments Incorporated

6.10.3.1.6 Bulk Bypass Capacitors

Bulk bypass capacitors are required for moderate speed bypassing of the DDR2/mDDR and other circuitry. Table 6-28 contains the minimum numbers and capacitance required for the bulk bypass capacitors. Note that this table only covers the bypass needs of the DMSoC and DDR2/mDDR interfaces. Additional bulk bypass capacitance may be needed for other circuitry.

Table 6-28. Bulk Bypass Capacitors

No.	Parameter	Min	Max	Unit	Notes
1	V_{DD18_DDR} Bulk Bypass Capacitor Count	3		Devices	See Note (1)
2	V_{DD18_DDR} Bulk Bypass Total Capacitance	30		uF	
3	DDR#1 Bulk Bypass Capacitor Count	1		Devices	See Note (1)
4	DDR#1 Bulk Bypass Total Capacitance	22		uF	
5	DDR#2 Bulk Bypass Capacitor Count	1		Devices	See Notes (1), (2)
6	DDR#2 Bulk Bypass Total Capacitance	22		uF	See Note (2)

(1) These devices should be placed near the device they are bypassing, but preference should be given to the placement of the high-speed (HS) bypass caps.
(2) Only used on dual-memory systems

6.10.3.1.7 High-Speed Bypass Capacitors

High-speed (HS) bypass capacitors are critical for proper DDR2/mDDR interface operation. It is particularly important to minimize the parasitic series inductance of the HS bypass cap, DMSoC/DDR2/mDDR power, and DMSoC/DDR2/mDDR ground connections. Table 6-29 contains the specification for the HS bypass capacitors as well as for the power connections on the PCB.

6.10.3.1.8 Net Classes

Table 6-30 lists the clock net classes for the DDR2/mDDR interface. Table 6-31 lists the signal net classes, and associated clock net classes, for the signals in the DDR2/mDDR interface. These net classes are used for the termination and routing rules that follow.

Table 6-29. High-Speed Bypass Capacitors

No.	Parameter	Min	Max	Unit	Notes
1	HS Bypass Capacitor Package Size		0402	10 Mils	See Note (1)
2	Distance from HS bypass capacitor to device being bypassed		250	Mils	
3	Number of connection vias for each HS bypass capacitor	2		Vias	See Note (2)
4	Trace length from bypass capacitor contact to connection via	1	30	Mils	
5	Number of connection vias for each DDR2/mDDR device power or ground balls	1		Vias	
6	Trace length from DDR2/mDDR device power ball to connection via		35	Mils	
7	V_{DD18_DDR} HS Bypass Capacitor Count	10		Devices	See Note (3)
8	V_{DD18_DDR} HS Bypass Capacitor Total Capacitance	1.2		uF	
9	DDR#1 HS Bypass Capacitor Count	8		Devices	See Note (3)
10	DDR#1 HS Bypass Capacitor Total Capacitance	0.4		uF	
11	DDR#2 HS Bypass Capacitor Count	8		Devices	See Notes (3), (4)
12	DDR#2 HS Bypass Capacitor Total Capacitance	0.4		uF	See Note (4)

(1) LxW, 10 mil units, i.e., a 0402 is a 40x20 mil surface mount capacitor
(2) An additional HS bypass capacitor can share the connection vias only if it is mounted on the opposite side of the board.
(3) These devices should be placed as close as possible to the device being bypassed.
(4) Only used on dual-memory systems

Copyright © 2009–2011, Texas Instruments Incorporated

Table 6-30. Clock Net Class Definitions

Clock Net Class	DMSoC Pin Names
CK	DDR_CLK/$\overline{\text{DDR_CLK}}$
DQS0	DDR_DQS0/DDR_DQSN0
DQS1	DDR_DQS1/DDR_DQSN1

Table 6-31. Signal Net Class Definitions

Clock Net Class	Associated Clock Net Class	DMSoC Pin Names
ADDR_CTRL	CK	DDR_BA[2:0], DDR_A[13:0], $\overline{\text{DDR_CS}}$, $\overline{\text{DDR_CAS}}$, $\overline{\text{DDR_RAS}}$, $\overline{\text{DDR_WE}}$, DDR_CKE
DQ0	DQS0	DDR_DQ[7:0], DDR_DQM0
DQ1	DQS1	DDR_DQ[15:8], DDR_DQM1
DQGATE	CK, DQS0, DQS1	DDR_DQGATE0, DDR_DQGATE1

6.10.3.1.9 DDR2/mDDR Signal Termination

No terminations of any kind are required in order to meet signal integrity and overshoot requirements. Serial terminators are permitted, if desired, to reduce EMI risk; however, serial terminations are the only type permitted. Table 6-32 shows the specifications for the series terminators.

Table 6-32. DDR2/mDDR Signal Terminations

No.	Parameter	Min	Typ	Max	Unit	Notes
1	CK Net Class	0		10	Ω	See Note (1)
2	ADDR_CTRL Net Class	0	22	Zo	Ω	See Notes (1), (2), (3)
3	Data Byte Net Classes (DQS0-DQS1, DQ0-DQ1)	0	22	Zo	Ω	See Notes (1), (2), (3), (4)
4	DQGATE Net Class (DQGATE)	0	10	Zo	Ω	See Notes (1), (2), (3)

(1) Only series termination is permitted, parallel or SST specifically disallowed.
(2) Terminator values larger than typical only recommended to address EMI issues.
(3) Termination value should be uniform across net class.
(4) When no termination is used on data lines (0 Ωs), the DDR2/mDDR devices must be programmed to operate in 60% strength mode.

6.10.3.1.10 VREF Routing

VREF is used as a reference by the input buffers of the DDR2/mDDR memories as well as the device. VREF is intended to be the DDR2/mDDR power supply voltage and should be created using a resistive divider as shown in Figure 6-19. Other methods of creating VREF are not recommended. Figure 6-23 shows the layout guidelines for VREF.

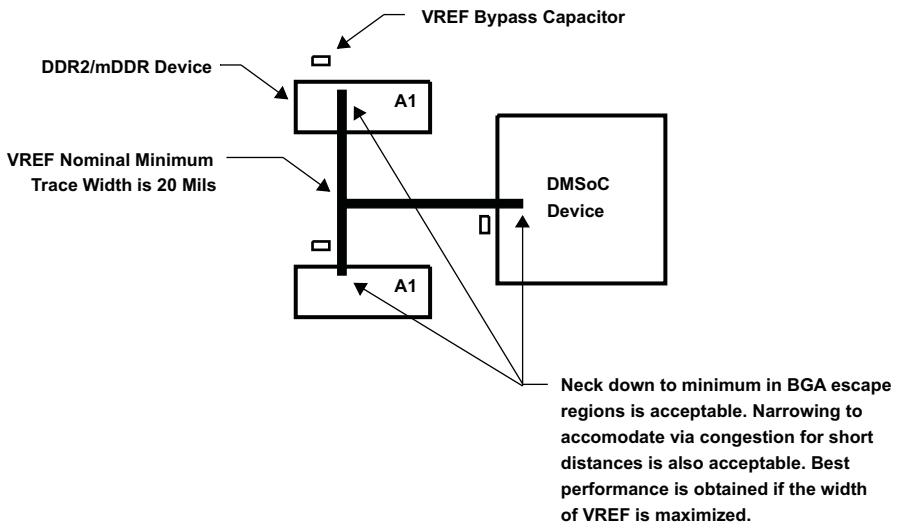

Figure 6-23. VREF Routing and Topology

6.10.3.1.11 DDR2/mDDR CK and ADDR_CTRL Routing

Figure 6-24 shows the topology of the routing for the CK and ADDR_CTRL net classes. The route is a balanced *T* as it is intended that the length of segments B and C be equal. In addition, the length of A should be maximized.

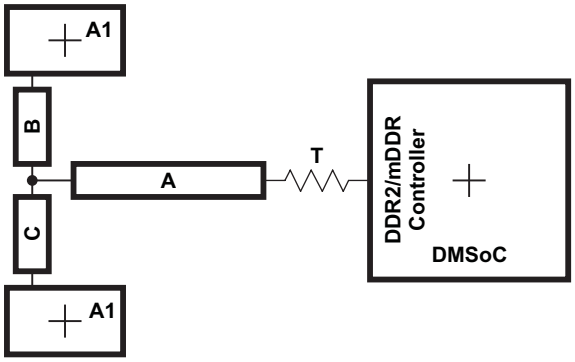

Figure 6-24. CK and ADDR_CTRL Routing and Topology

Copyright © 2009–2011, Texas Instruments Incorporated

Table 6-33. CK and ADDR_CTRL Routing Specification (1)

No	Parameter	Min	Typ	Max	Unit	Notes
1	Center to center DQS-DQSN spacing			2w		
2	CK A to B/A to C Skew Length Mismatch			25	Mils	See Note (1)
3	CK B to C Skew Length Mismatch			25	Mils	
4	Center to center CK to other DDR2/mDDR trace spacing	4w				See Note (2)
5	CK/ADDR_CTRL nominal trace length	CACLM-50	CACLM	CACLM+50	Mils	See Note (3)
6	ADDR_CTRL to CK Skew Length Mismatch			100	Mils	
7	ADDR_CTRL to ADDR_CTRL Skew Length Mismatch			100	Mils	
8	Center to center ADDR_CTRL to other DDR2/mDDR trace spacing	4w				See Note (2)
9	Center to center ADDR_CTRL to other ADDR_CTRL trace spacing	3w				See Note (2)
10	ADDR_CTRL A to B/A to C Skew Length Mismatch			100	Mils	See Note (1)
11	ADDR_CTRL B to C Skew Length Mismatch			100	Mils	

(1) Series terminator, if used, should be located closest to DMSoC.
(2) Center to center spacing is allowed to fall to minimum (w) for up to 500 mils of routed length to accommodate BGA escape and routing congestion.
(3) CACLM is the longest Manhattan distance of the CK and ADDR_CTRL net classes.

Figure 6-25 shows the topology and routing for the DQS and DQ net classes; the routes are point to point. Skew matching across bytes is not needed nor recommended.

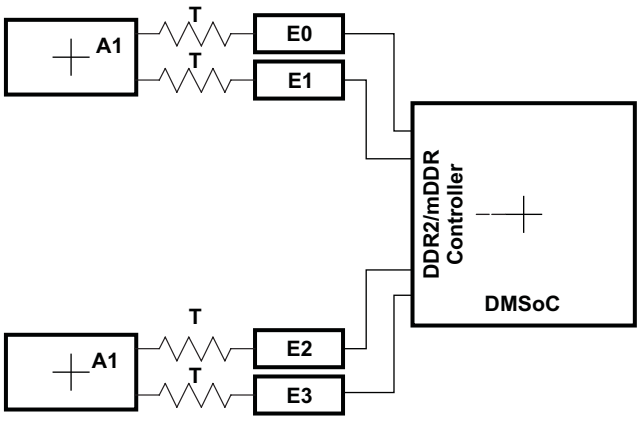

Figure 6-25. DQS and DQ Routing and Topology

Table 6-34. DQS and DQ Routing Specification

No.	Parameter	Min	Typ	Max	Unit	Notes
1	Center to center DQS-DQSN spacing			2w		
2	DQS E Skew Length Mismatch			25	Mils	
3	Center to center DQS to other DDR2/mDDR trace spacing	4w				See Note (1)
4	DQS/DQ nominal trace length	DQLM-50	DQLM	DQLM+50	Mils	See Notes (2), (3)
5	DQ to DQS Skew Length Mismatch			100	Mils	See Note (3)
6	DQ to DQ Skew Length Mismatch			100	Mils	See Note (3)
7	Center to center DQ to other DDR2/mDDR trace spacing	4w				See Notes (1),(4)
8	Center to Center DQ to other DQ trace spacing	3w				See Notes (5), (1)
9	DQ/DQS E Skew Length Mismatch			100	Mils	See Note (3)

(1) Center to center spacing is allowed to fall to minimum (w) for up to 500 mils of routed length to accommodate BGA escape and routing congestion.
(2) Series terminator, if used, should be located closest to DDR.
(3) There is no need and it is not recommended to skew match across data bytes, i.e., from DQS0 and data byte 0 to DQS1 and data byte 1.
(4) DQ's from other DQS domains are considered *other DDR2/mDDR trace*.
(5) DQLM is the longest Manhattan distance of each of the DQS and DQ net classes.

Figure 6-26 shows the routing for the DQGATE net classes. Table 6-35 contains the routing specification.

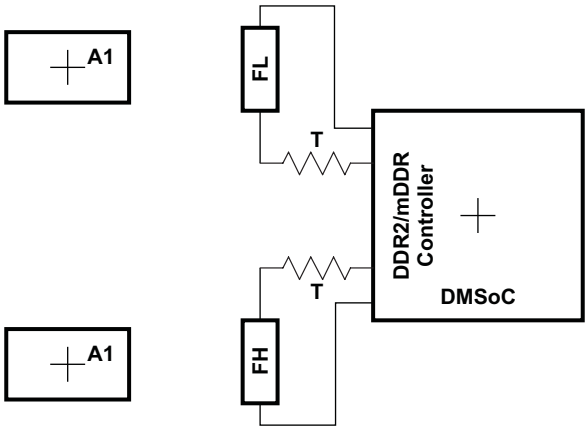

Figure 6-26. DQGATE Routing

Copyright © 2009–2011, Texas Instruments Incorporated

Table 6-35. DQGATE Routing Specification

No.	Parameter	Min	Typ	Max	Unit	Notes
1	DQGATE Length F		CKB0B1			See Note (1)
3	Center to center DQGATE to any other trace spacing	4w				
4	DQS/DQ nominal trace length	DQLM-50	DQLM	DQLM+50	Mils	
5	DQGATE Skew			100	Mils	See Note (2)

(1) CKB0B1 is the sum of the length of the CK net plus the average length of the DQS0 and DQS1 nets.
(2) Skew from CKB0B1

6.11 MMC/SD

The device includes MMC/SD Controllers which are compliant with MMC V3.31, Secure Digital Part 1 Physical Layer Specification V1.1 and Secure Digital Input Output (SDIO) V2.0 specifications.

The device MMC/SD Controller has following features:

- MultiMediaCard (MMC)
- Secure Digital (SD) Memory Card
- MMC/SD protocol support
- SDIO protocol support
- Programmable clock frequency
- 512 bit Read/Write FIFO to lower system overhead
- Slave EDMA transfer capability
- SD High Capacity support

The device MMC/SD Controller does not support SPI mode.

6.11.1 MMC/SD Peripheral Register Description(s)

Table 6-36 lists the MMC/SD registers, their corresponding acronyms, and device memory locations (offsets).

Table 6-36. Multimedia Card/Secure Digital (MMC/SD) Card Controller Registers

OFFSET	ACRONYM	REGISTER DESCRIPTION
00h	MMCCTL	MMC Control Register
04h	MMCCLK	MMC Memory Clock Control Register
08h	MMCST0	MMC Status Register 0
0Ch	MMCST1	MMC Status Register 1
10h	MMCIM	MMC Interrupt Mask Register
14h	MMCTOR	MMC Response Time-Out Register
18h	MMCTOD	MMC Data Read Time-Out Register
1Ch	MMCBLEN	MMC Block Length Register
20h	MMCNBLK	MMC Number of Blocks Register
24h	MMCNBLC	MMC Number of Blocks Counter Register
28h	MMCDRR	MMC Data Receive Register
2Ch	MMCDXR	MMC Data Transmit Register
30h	MMCCMD	MMC Command Register
34h	MMCARGHL	MMC Argument Register
38h	MMCRSP01	MMC Response Register 0 and 1
3Ch	MMCRSP23	MMC Response Register 2 and 3
40h	MMCRSP45	MMC Response Register 4 and 5
44h	MMCRSP67	MMC Response Register 6 and 7
48h	MMCDRSP	MMC Data Response Register
50h	MMCCIDX	MMC Command Index Register
64h	SDIOCTL	SDIO Control Register
68h	SDIOST0	SDIO Status Register 0
6Ch	SDIOIEN	SDIO Interrupt Enable Register
70h	SDIOIST	SDIO Interrupt Status Register
74h	MMCFIFOCTL	MMC FIFO Control Register

Copyright © 2009–2011, Texas Instruments Incorporated

6.11.2 MMC/SD Electrical Data/Timing

Table 6-37. Timing Requirements for MMC/SD Module (see Figure 6-28 and Figure 6-30)

NO.			DEVICE				UNIT
			FAST MODE		STANDARD MODE		
			MIN	MAX	MIN	MAX	
1	$t_{su(CMDV-CLKH)}$	Setup time, SD_CMD valid before SD_CLK high	2.7		2.7		ns
2	$t_{h(CLKH-CMDV)}$	Hold time, SD_CMD valid after SD_CLK high	2.5		2.5		ns
3	$t_{su(DATV-CLKH)}$	Setup time, SD_DATx valid before SD_CLK high	2.7		2.7		ns
4	$t_{h(CLKH-DATV)}$	Hold time, SD_DATx valid after SD_CLK high	2.5		2.5		ns

Table 6-38. Switching Characteristics Over Recommended Operating Conditions for MMC/SD Module (see Figure 6-27 through Figure 6-30)

NO.	PARAMETER		DEVICE				UNIT
			FAST MODE		STANDARD MODE		
			MIN	MAX	MIN	MAX	
7	$f_{(CLK)}$	Operating frequency, SD_CLK	0	50	0	25	MHz
8	$f_{(CLK_ID)}$	Identification mode frequency, SD_CLK	0	400	0	400	KHz
9	$t_{W(CLKL)}$	Pulse width, SD_CLK low	6.5		6.5		ns
10	$t_{W(CLKH)}$	Pulse width, SD_CLK high	6.5		6.5		ns
11	$t_{r(CLK)}$	Rise time, SD_CLK		3		3	ns
12	$t_{f(CLK)}$	Fall time, SD_CLK		3		3	ns
13	$t_{d(CLKL-CMD)}$	Delay time, SD_CLK low to SD_CMD transition	-4.1	1.5	-4.1	1.5	ns
14	$t_{d(CLKL-DAT)}$	Delay time, SD_CLK low to SD_DATx transition	-4.1	1.5	-4.1	1.5	ns

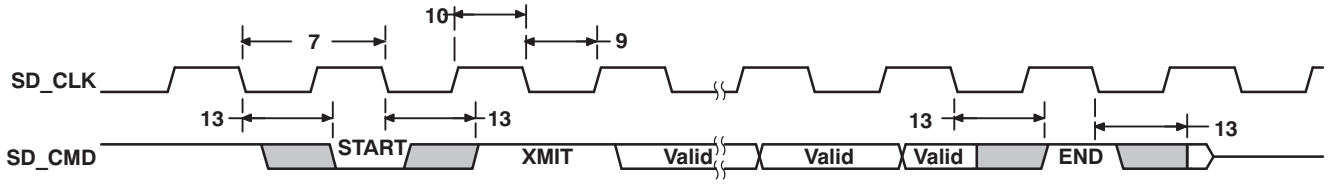

Figure 6-27. MMC/SD Host Command Timing

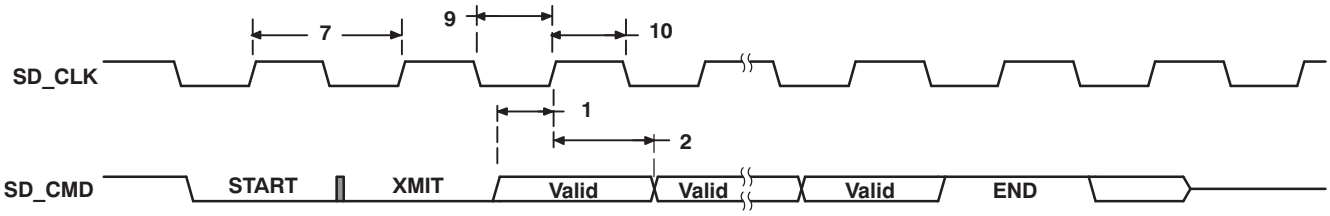

Figure 6-28. MMC/SD Card Response Timing

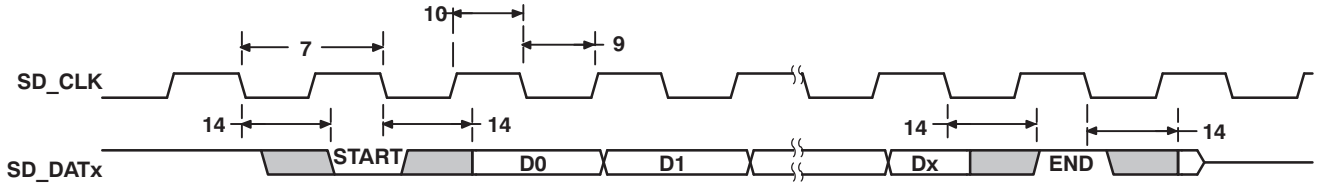

Figure 6-29. MMC/SD Host Write Timing

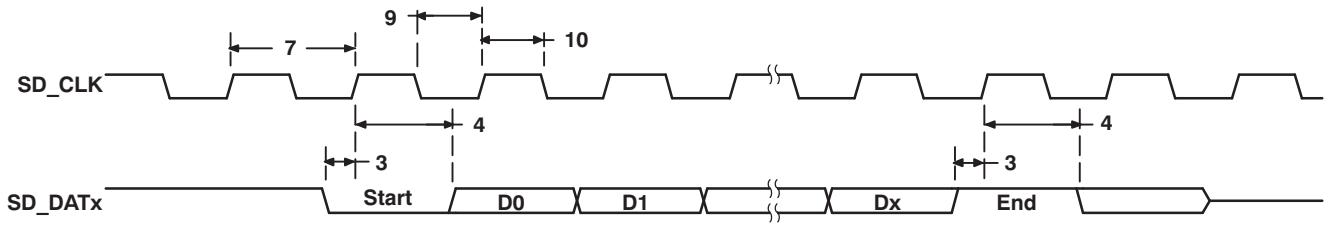

Figure 6-30. MMC/SD Host Read and Card CRC Status Timing

Copyright © 2009–2011, Texas Instruments Incorporated

6.12 Video Processing Subsystem (VPSS) Overview

The device contains a Video Processing Subsystem (VPSS) that provides an input interface (Video Processing Front End or VPFE) for external imaging peripherals such as image sensors, video decoders, etc.; and an output interface (Video Processing Back End or VPBE) for display devices, such as analog SDTV/HDTV displays, digital LCD panels, etc.

In addition to these peripherals, there is a set of common buffer memory and DMA control to ensure efficient use of the DDR2/mDDR burst bandwidth. The shared buffer logic/memory is a unique block that is tailored for seamlessly integrating the VPSS into an image/video processing system. It acts as the primary source or sink to all the VPFE and VPBE modules that are either requesting or transferring data from/to DDR2/mDDR . In order to efficiently utilize the external DDR2/mDDR bandwidth, the shared buffer logic/memory interfaces with the DMA system via a high bandwidth bus (64-bit wide). The shared buffer logic/memory also interfaces with all the VPFE and VPBE modules via a 128-bit wide bus. The shared buffer logic/memory (divided into the read & write buffers and arbitration logic) is capable of performing the following functions. It is imperative that the VPSS utilize DDR2/mDDR bandwidth efficiently due to both its large bandwidth requirements and the real-time requirements of the VPSS modules. Because it is possible to configure the VPSS modules in such a way that DDR2/mDDR bandwidth is exceeded, a set of user accessible registers is provided to monitor overflows or failures in data transfers.

6.12.1 Video Processing Front-End (VPFE)

The VPFE or Video Processing Front-End block is comprised of the Image Sensor Interface (ISIF), Image Pipe (IPIPE), Image Pipe Interface (IPIPEIF), Hardware 3A Statistic Generator (H3A), and a Hardware Face Detect Engine. These modules are described in the sections that follow.

The VPFE sub-module register memory mapping is shown in Table 6-39.

Table 6-39. Video Processing Front End Sub-Module Register Map

Address:Offset	Acronym	Register Description
0x01C7:0000	ISP	ISP System Configuration
0x01C7:0200	VPBE_CLK_CTRL	VPBE Clock Control
0x01C7:0400	RSZ	Resizer
0x01C7:0800	IPIPE	Image Pipe
0x01C7:1000	ISIF	Image Sensor Interface
0x01C7:1200	IPIPEIF	Image Pipe Interface
0x01C7:1400	H3A	Hardware 3A
0x01C7:1600 - 0x01C7:17FF	Reserved	Reserved
0x01C7:1800	FDIF	Face Detection Register Interface
0x01C7:1C00	OSD	VPBE On-Screen Display
0x01C7:1D00 - 0x01C7:1DFF	Reserved	Reserved
0x01C7:1E00	VENC	VPBE Video Encoder
0x01C7:2000 - 0x01CF:FFFF	Reserved	Reserved

6.12.1.1 Image Sensor Interface (ISIF)

The ISIF is responsible for accepting raw (unprocessed) image/video data from a sensor (CMOS or CCD). In addition, the ISIF can accept YUV video data in numerous formats, typically from so-called video decoder devices. In case of raw inputs, the ISIF output requires additional image processing to transform

the raw input image to the final processed image. This processing can be done either on-the-fly in IPIPE or in software on the ARM and MPEG/JPEG and HD Video Image coprocessor subsystems. In parallel, raw data input to the ISIF can also used for computing various statistics (3A, Histogram) to eventually control the image/video tuning parameters. The ISIF is programmed via control and parameter registers. The following features are supported by the ISIF module.

- Support for conventional Bayer pattern, pixel summation mode, and RGB stripe sensor formats.
- Support for the various pixel summation mode formats is provided via a data reformatter of ISIF, which transforms any specific sensor formats to the Bayer format. The maximum line width supported by the reformatter is 4736 pixels.
- Image processing steps applicable to RGB stripe sensors are limited to color-dependent gain control and black level offset control."
- Generates HD/VD timing signals and field ID to an external timing generator, or can synchronize to the external timing generator.
- Support for progressive and interlaced sensors (hardware support for up to 2 fields and firmware support for higher number of fields, typically 3-, 4-, and 5-field sensors.
- Support for up to 32K pixels (image size) in both the horizontal and vertical direction.
- Support for up to 120 MHz sensor clock.
- Support for ITU-R BT.656/1120 standard format.
- Support for YCbCr 422 format, either 8- or 16-bit with discrete HSYNC and VSYNC signals.
- Support for up to 16-bit input.
- Support for color space conversion.
- Digital clamp with Horizontal/Vertical offset drift compensation.
- Vertical Line defect correction based on a lookup table that contains defect position.
- Support for color-dependent gain control and black level offset control.
- Ability to control output to the DDR2/mDDR via an external write enable signal.
- Support for down sampling via programmable culling patterns.
- Support for 12-bit to 8-bit DPCM compression.
- Support for 10-bit to 8-bit A-law compression.
- Support for generating output to range 16-bits, 12-bits, and 8-bits wide (8-bits wide allows for 50% saving in storage area).
- OTF DPC
- Noise Filter
- 2D edge enhancement

The ISIF register memory mapping (offsets) is shown in Table 6-40.

Table 6-40. Image Sensor Interface (ISIF) Registers

Offset	Acronym	Register Description
0h	SYNCEN	Synchronization Enable
4h	MODESET	Mode Setup
8h	HDW	HD pulse width
Ch	VDW	VD pulse width
10h	PPLN	Pixels per line
14h	LPFR	Lines per frame
18h	SPH	Start pixel horizontal
1Ch	LNH	Number of pixels in line
20h	SLV0	Start line vertical - field 0
24h	SLV1	Start line vertical - field 1
28h	LNV	Number of lines vertical

 Copyright © 2009–2011, Texas Instruments Incorporated

Table 6-40. Image Sensor Interface (ISIF) Registers (continued)

Offset	Acronym	Register Description
2Ch	CULH	Culling - horizontal
30h	CULV	Culling - vertical
34h	HSIZE	Horizontal size
38h	SDOFST	SDRAM Line Offset
3Ch	CADU	SDRAM Address - high
40h	CADL	SDRAM Address - low
44h - 48h	Reserved	Reserved
4Ch	CCOLP	CCD Color Pattern
50h	CRGAIN	CCD Gain Adjustment - R/Ye
54h	CGRGAIN	CCD Gain Adjustment - Gr/Cy
58h	CGBGAIN	CCD Gain Adjustment - Gb/G
5Ch	CBGAIN	CCD Gain Adjustment - B/Mg
60h	COFSTA	CCD Offset Adjustment
64h	FLSHCFG0	FLSHCFG0
68h	FLSHCFG1	FLSHCFG1
6Ch	FLSHCFG2	FLSHCFG2
70h	VDINT0	VD Interrupt #0
74h	VDINT1	VD Interrupt #1
78h	VDINT2	VD Interrupt #2
7Ch	Reserved	Reserved
80h	CGAMMAWD	Gamma Correction settings
84h	REC656IF	CCIR 656 Control
88h	CCDCFG	CCD Configuration
8Ch	DFCCTL	Defect Correction - Control
90h	VDFSATLV	Defect Correction - Vertical Saturation Level
94h	DFCMEMCTL	Defect Correction - Memory Control
98h	DFCMEM0	Defect Correction - Set V Position
9Ch	DFCMEM1	Defect Correction - Set H Position
A0h	DFCMEM2	Defect Correction - Set SUB1
A4h	DFCMEM3	Defect Correction - Set SUB2
A8h	DFCMEM4	Defect Correction - Set SUB3
ACh	CLAMPCFG	Black Clamp configuration
B0h	CLDCOFST	DC offset for Black Clamp
B4h	CLSV	Black Clamp Start position
B8h	CLHWIN0	Horizontal Black Clamp configuration
BCh	CLHWIN1	Horizontal Black Clamp configuration
C0h	CLHWIN2	Horizontal Black Clamp configuration
C4h	CLVRV	Vertical Black Clamp configuration
C8h	CLVWIN0	Vertical Black Clamp configuration
CCh	CLVWIN1	Vertical Black Clamp configuration
D0h	CLVWIN2	Vertical Black Clamp configuration
D4h	CLVWIN3	Vertical Black Clamp configuration
D8h - 1A2h	Reserved	Reserved
1A4h	CSCCTL	Color Space Converter Enable
1A8h	CSCM0	Color Space Converter - Coefficients #0
1ACh	CSCM1	Color Space Converter - Coefficients #1
1B0h	CSCM2	Color Space Converter - Coefficients #2

Copyright © 2009–2011, Texas Instruments Incorporated

Table 6-40. Image Sensor Interface (ISIF) Registers (continued)

Offset	Acronym	Register Description
1B4h	CSCM3	Color Space Converter - Coefficients #3
1B8h	CSCM4	Color Space Converter - Coefficients #4
1BCh	CSCM5	Color Space Converter - Coefficients #5
1C0h	CSCM6	Color Space Converter - Coefficients #6
1C4h	CSCM7	Color Space Converter - Coefficients #7

6.12.1.2 The Image Pipe Interface (IPIPEIF)

The IPIPEIF is data and sync signals interface module for ISIF and IPIPE. Data source of this module is sensor parallel port, ISIF or SDRAM and the selected data is output to ISIF and IPIPE. This module also outputs black frame subtraction (two-way) data which is generated by subtracting SDRAM data from sensor parallel port or ISIF data and vice versa. Depending on the functions performed, it may also readjust the HD, VD, and PCLK timing to the IPIPE and/or ISIF input.

The IPIPEIF module supports the following features:

- Up to 16-bit sensor data input
- Dark-frame subtract of raw image stored in SDRAM from image coming from sensor parallel port or ISIF
- 8-10, 8-12 DPCM decompression of 10-8, 12-8 compressed data in SDRAM
- Inverse ALAW decompression of RAW data from SDRAM
- (1,2,1) average filtering before horizontal decimation
- Horizontal decimation (downsizing) of input lines to <= 2160 maximum required by the IPIPE
- Gain multiply for output data to IPIPE
- Simple defect correction to prevent a subtraction of defect pixel
- 8-bit, 12-bit unpacking of 8-bit, 12-bit packed SDRAM data

The IPIPE register memory mapping (offsets) is shown in Table 6-41.

Table 6-41. Image Pipe Input Interface (IPIPEIF) Registers

Address	Acronym	Register Description
0h	ENABLE	IPIPE I/F Enable
4h	CFG1	IPIPE I/F Configuration
8h	PPLN	IPIPE I/F Interval of HD / Start pixel in HD
Ch	LPFR	IPIPE I/F Interval of VD / Start line in VD
10h	HNUM	IPIPE I/F Number of valid pixels per line
14h	VNUM	IPIPE I/F Number of valid lines per frame
18h	ADDRU	IPIPE I/F Memory Address (Upper)
1Ch	ADDRL	IPIPE I/F Memory Address (Lower)
20h	ADOFS	IPIPE I/F Address offset of each line
24h	RSZ	IPIPE I/F Horizontal Resizing Parameter
28h	GAIN	IPIPE I/F Gain Parameter
2Ch	DPCM	IPIPE I/F DPCM Configuration
30h	CFG2	IPIPE I/F Configuration 2
34h	INIRSZ	IPIPE I/F Initial position of resize
38h	OCLIP	IPIPE I/F Output clipping value
3Ch	DTUDF	IPIPE I/F Data underflow error status
40h	CLKDIV	IPIPE I/F Clock rate configuration
44h	DPC1	IPIPE I/F Defect pixel correction
48h	DPC2	IPIPE I/F Defect pixel correction

Copyright © 2009–2011, Texas Instruments Incorporated

Table 6-41. Image Pipe Input Interface (IPIPEIF) Registers (continued)

Address	Acronym	Register Description
54h	RSZ3A	IPIPE I/F Horizontal Resizing Parameter for H3A
58h	INIRSZ3A	IPIPE I/F Initial position of resize for H3A

6.12.1.3 Image Pipe – Hardware Image Signal Processor (IPIPE)

The Image Pipe (IPIPE) is a programmable hardware image processing module that generates image data in YCbCr-4:2:2 or YCbCr-4:2:0 formats from raw CCD/CMOS data. An image resizer is also fully integrated within this module. The IPIPE can also be configured to operate in a resize-only mode, which allows YCbCr-4:2:2 or YCbCr-4:2:0 to be resized without processing every module in the IPIPE.

The following features are supported by the IPIPE:

- 12-bit RAW data image processing or 16-bit YCbCr resizing
- RGB Bayer pattern for input color filter array; does not support complementary color pattern, stripe pattern, or Foveon™ sensors.
- Requires at least eight pixels for horizontal blanking and four lines for vertical blanking. In one shot mode, 16 blanking lines after processing area are required.
- Maximum horizontal and vertical offset of IPIPE processing area from synchronous signal is 65534
- Maximum input and output widths up to 2176 pixels wide (1088 for RSZ[2]).
- Raw pass-through mode for images wider than 2176 pixels (up to 8190 pixels)
- Automatic mirroring of pixels/lines when edge processing is performed so that the width and height is consistent throughout.
- Defect pixel correction using
  - Lookup table method that contains row and column position of the pixel to be corrected
  - On-the-fly adaptive method
- Offset and gain control for white balancing at each color component (WB).
- CFA interpolation for good quality CFA interpolation
- Programmable RGB to RGB blending matrix (9 coefficients for the 3x3 matrix). (RGB2RGB module)
- Separate lookup tables for gamma correction on each of R, G and B components for display through piece-wise linear interpolation approach
- 4:4:4 data to 4:2:2 data conversion by chroma low-pass filtering and down sampling to Cb and Cr. (4:4:4 to 4:2:2 module)
- Programmable look-up table for luminance edge enhancement. Adjustable brightness and contrast for Y component (Edge Enhancer module)
- Programmable down or up-sampling filter for both horizontal and vertical directions with range from 1/16x to 16x, in which the filter outputs two images with different magnification simultaneously (Resizer module)
- 4:2:2 to 4:2:0 conversion that can be done in the resizing block
- Different data formats [YCbCr (4:2:2 or 4:2:0), RGB (32bit/16bit), Raw data] are available while storing data in the SDRAM from IPIPE
- Flipping image horizontally and/or vertically
- Programmable histogram engine (4 windows, 256 bins)
- Boxcar calculation (1/8 or 1/16 size).

The IPIPE register memory mapping (offsets) is shown in Table 6-42.

Table 6-42. IPIPE Registers

Offset	Acronym	Register Description
0h	SRC_EN	IPIPE Enable

Table 6-42. IPIPE Registers (continued)

Offset	Acronym	Register Description
04h	SRC_MODE	One Shot Mode
08h	SRC_FMT	Input/Output Data Paths
Ch	SRC_COL	Color Pattern
10h	SRC_VPS	Vertical Start Position
14h	SRC_VSZ	Vertical Processing Size
18h	SRC_HPS	Horizontal Start Position
1Ch	SRC_HSZ	Horizontal Processing Size
24h	DMA_STA	Status Flags (Reserved)
48h	GCK_MMR	MMR Gated Clock Control
2Ch	GCK_PIX	PCLK Gated Clock Control
30h	Reserved	Reserved
34h	DPC_LUT_EN	LUTDPC (=LUT Defect Pixel Correction): Enable
38h	DPC_LUT_SEL	LUTDPC: Processing Mode Selection
3Ch	DPC_LUT_ADR	LUTDPC: Start Address in LUT
40h	DPC_LUT_SIZ	LUTDPC: Number of available entries in LUT
1D0h	WB2_OFT_R	WB2 (=White Balance): Offset
1D4h	WB2_OFT_GR	WB2: Offset
1D8h	WB2_OFT_GB	WB2: Offset
1DCh	WB2_OFT_B	WB2: Offset
1E0h	WB2_WGN_R	WB2: Gain
1E4h	WB2_WGN_GR	WB2: Gain
1E8h	WB2_WGN_GB	WB2: Gain
1ECh	WB2_WGN_B	WB2: Gain
1F0h-228h	Reserved	Reserved
22Ch	RGB1_MUL_RR	RGB1 (=1st RGB2RGB conv): Matrix Coefficient
230h	RGB1_MUL_GR	RGB1: Matrix Coefficient
234h	RGB1_MUL_BR	RGB1: Matrix Coefficient
238h	RGB1_MUL_RG	RGB1: Matrix Coefficient
23Ch	RGB1_MUL_GG	RGB1: Matrix Coefficient
240h	RGB1_MUL_BG	RGB1: Matrix Coefficient
244h	RGB1_MUL_RB	RGB1: Matrix Coefficient
248h	RGB1_MUL_GB	RGB1: Matrix Coefficient
24Ch	RGB1_MUL_BB	RGB1: Matrix Coefficient
250h	RGB1_OFT_OR	RGB1: Offset
254h	RGB1_OFT_OG	RGB1: Offset
258h	RGB1_OFT_OB	RGB1: Offset
25Ch	GMM_CFG	Gamma Correction Configuration
294h	YUV_ADJ	YUV (RGB2YCbCr conv): Luminance Adjustment (contrast & brightness)
298h	YUV_MUL_RY	YUV: Matrix Coefficient
29Ch	YUV_MUL_GY	YUV: Matrix Coefficient
2A0h	YUV_MUL_BY	YUV: Matrix Coefficient
2A4h	YUV_MUL_RCB	YUV: Matrix Coefficient
2A8h	YUV_MUL_GCB	YUV: Matrix Coefficient
2ACh	YUV_MUL_BCB	YUV: Matrix Coefficient
2B0h	YUV_MUL_RCR	YUV: Matrix Coefficient
2B4h	YUV_MUL_GCR	YUV: Matrix Coefficient
2B8h	YUV_MUL_BCR	YUV: Matrix Coefficient

 Copyright © 2009–2011, Texas Instruments Incorporated

Table 6-42. IPIPE Registers (continued)

Offset	Acronym	Register Description
2BCh	YUV_OFT_Y	YUV: Offset
2C0h	YUV_OFT_CB	YUV: Offset
2C4h	YUV_OFT_CR	YUV: Offset
2C8h	YUV_PHS	Chrominance Position (for 422 down sampler)
2D4h	YEE_EN	YEE (=Edge Enhancer): Enable
2D8h	YEE_TYP	YEE: Method Selection
2DCh	YEE_SHF	YEE: HPF Shift Length
2E0h	YEE_MUL_00	YEE: HPF Coefficient
2E4h	YEE_MUL_01	YEE: HPF Coefficient
2E8h	YEE_MUL_02	YEE: HPF Coefficient
2ECh	YEE_MUL_10	YEE: HPF Coefficient
2F0h	YEE_MUL_11	YEE: HPF Coefficient
2F4h	YEE_MUL_12	YEE: HPF Coefficient
2F8h	YEE_MUL_20	YEE: HPF Coefficient
2FCh	YEE_MUL_21	YEE: HPF Coefficient
300h	YEE_MUL_22	YEE: HPF Coefficient
304h	YEE_THR	YEE: Lower Threshold before referring to LUT
308h	YEE_E_GAN	YEE: Edge Sharpener Gain
30Ch	YEE_E_THR_1	YEE: Edge Sharpener HP Value Lower Threshold
310h	YEE_E_THR_2	YEE: Edge Sharpener HP Value Upper Limit
314h	YEE_G_GAN	YEE: Edge Sharpener Gain on Gradient
318h	YEE_G_OFT	YEE: Edge Sharpener Offset on Gradient
380h	BOX_EN	BOX (=Boxcar) Enable
384h	BOX_MODE	BOX: One Shot Mode
388h	BOX_TYP	BOX: Block Size (16x16 or 8x8)
38Ch	BOX_SHF	BOX: Down shift value of input
390h	BOX_SDR_SAD_H	BOX: SDRAM Address MSB
394h	BOX_SDR_SAD_L	BOX: SDRAM Address LSB
398h	Reserved	Reserved
39Ch	HST_EN	HST (=Histogram): Enable
3A0h	HST_MODE	HST: One Shot Mode
3A4h	HST_SEL	HST: Source Select
3A8h	HST_PARA	HST: Parameters Select
3ACh	HST_0_VPS	HST: Vertical Start Position
3B0h	HST_0_VSZ	HST: Vertical Size
3B4h	HST_0_HPS	HST: Horizontal Start Position
3B8h	HST_0_HSZ	HST: Horizontal Size
3BCh	HST_1_VPS	HST: Vertical Start Position
3C0h	HST_1_VSZ	HST: Vertical Size
3C4h	HST_1_HPS	HST: Horizontal Start Position
3C8h	HST_1_HSZ	HST: Horizontal Size
3CCh	HST_2_VPS	HST: Vertical Start Position
3D0h	HST_2_VSZ	HST: Vertical Size
3D4h	HST_2_HPS	HST: Horizontal Start Position
3D8h	HST_2_HSZ	HST: Horizontal Size
3DCh	HST_3_VPS	HST: Vertical Start Position
3E0h	HST_3_VSZ	HST: Vertical Size

Copyright © 2009–2011, Texas Instruments Incorporated

Table 6-42. IPIPE Registers (continued)

Offset	Acronym	Register Description
3E4h	HST_3_HPS	HST: Horizontal Start Position
3E8h	HST_3_HSZ	HST: Horizontal Size
3ECh	HST_TBL	HST: Table Select
3F0h	HST_MUL_R	HST: Matrix Coefficient
3F4h	HST_MUL_GR	HST: Matrix Coefficient
3F8h	HST_MUL_GB	HST: Matrix Coefficient
3FCh	HST_MUL_B	HST: Matrix Coefficient

6.12.1.4 Hardware 3A (H3A)

The H3A module is designed to support the control loops for Auto Focus, Auto White Balance and Auto Exposure by collecting metrics about the imaging/video data. The metrics are to adjust the various parameters for processing the imaging/video data. There are 2 main blocks in the H3A module:

- Auto Focus (AF) engine
- Auto Exposure (AE) Auto White Balance (AWB) engine

The AF engine extracts and filters the red, green, and blue data from the input image/video data and provides either the accumulation or peaks of the data in a specified region. The specified region is a two-dimensional block of data and is referred to as a "paxel" for the case of AF.

The AE/AWB Engine accumulates the values and checks for saturated values in a sub sampling of the video data. In the case of the AE/AWB, the two-dimensional block of data is referred to as a "window". Thus, other than referring them by different names, a paxel and a window are essentially the same thing. However, the number, dimensions, and starting position of the AF paxels and the AE/AWB windows are separately programmable.

The following features are supported by the AF engine:

- Support for input from DDR2 / mDDR SDRAM (in addition to the ISIF port)
- Support for a Peak Mode in a Paxel (a Paxel is defined as a two dimensional block of pixels).
- Accumulate the maximum Focus Value of each line in a Paxel
- Support for an Accumulation/Sum Mode (instead of Peak mode).
- Accumulate Focus Value in a Paxel.
- Support for up to 36 Paxels in the horizontal direction and up to 128 Paxels in the vertical direction. The number of horizontal paxels is limited by the memory size (and cost), while the vertical number of paxels is not. Therefore, the number of paxels in horizontal direction is smaller than the number of paxels in vertical direction.
- Programmable width and height for the Paxel. All paxels in the frame will be of same size.
- Programmable red, green, and blue position within a 2x2 matrix.
- Separate horizontal start for paxel and filtering.
- Programmable vertical line increments within a paxel.
- Parallel IIR filters configured in a dual-biquad configuration with individual coefficients (2 filters with 11 coefficients each). The filters are intended to compute the sharpness/peaks in the frame to focus on.

The following features are supported by the AE/AWB engine:

- Support for input from DDR2 / mDDR SDRAM (in addition to the ISIF port)
- Accumulate clipped pixels along with all non-saturated pixels
- Support for up to 36 horizontal windows.
- Support for up to 128 vertical windows.
- Programmable width and height for the windows. All windows in the frame will be of same size.
- Separate vertical start co-ordinate and height for a black row of paxels that is different than the remaining color paxels.

 Copyright © 2009–2011, Texas Instruments Incorporated

- Programmable Horizontal Sampling Points in a window
- Programmable Vertical Sampling Points in a window

The Hardware 3A (H3A) register memory mapping (offsets) is shown in Table 6-43.

Table 6-43. Hardware 3A Statistics Generation (AE, AF, AWB) (H3A) Registers

Offset	Acronym	Register Description
0h	PID	Peripheral Revision and Class Information
4h	PCR	Peripheral Control Register
8h	AFPAX1	Setup for the AF Engine Paxel Configuration
Ch	AFPAX2	Setup for the AF Engine Paxel Configuration
10h	AFPAXSTART	Start Position for AF Engine Paxels
18h	AFBUFST	SDRAM/DDRAM Start address for AF Engine
4Ch	AEWWIN1	Configuration for AE/AWB Windows
50h	AEWINSTART	Start position for AE/AWB Windows
54h	AEWINBLK	Start position and height for black line of AE/AWB Windows
58h	AEWSUBWIN	Configuration for subsample data in AE/AWB window
5Ch	AEWBUFST	SDRAM/DDRAM Start address for AE/AWB Engine Output Data
60h	RSDR_ADDR	AE/AWB Engine Configuration
64h	LINE_START	Line start position for ISIF interface
68h	VFV_CFG1	AF Vertical Focus Configuration 1 Register
6Ch	VFV_CFG2	AF Vertical Focus Configuration 2 Register
70h	VFV_CFG3	AF Vertical Focus Configuration 3 Register
74h	VFV_CFG4	AF Vertical Focus Configuration 4 Register
78h	HFV_THR	Configures the Horizontal Thresholds for the AF IIR filters

6.12.1.5 Face Detection Module

The following features are supported on the Face Detection module:

- High detection rate of close to 100% under most conditions
- Allows detection in different directions - up, left, and right
- Allows detection with rotation in plane (RIP) - ±45°, @ 0°/+90°/-90°
- Allows detection for rotation out of plane (ROP)
  - Horizontal (left/right) pan: ±60°
  - Vertical (up/down) tilt: ±30°
- Configurable minimum face size of 20 - 40 pixels
- Configurable region of interest in the input frame
- Configurable start position in the input frame
- Supports up to 35 face detections in a single frame
- Interrupt generation to ARM using the Video Processing Subsystem (VPSS) multiplexed interrupt mechanism
- Robust performance in low light conditions, night vision, monochromatic, and false color sensing as skin tone not used for face detection
- Supported input size is (256X192)
- Input format is 8-bit gray scale data

The Face Detection Module register memory mapping (offsets) is shown in Table 6-44.

Table 6-44. Face Detection Module Registers

Offset	Acronym	Register Description
0x000	FDIF_PID	FDIF PID
0x008	FDIF_INTEN	FDIF Interrupt enable
0x00C	FDIF_PICADDR	FDIF Picture Data address
0x010	FDIF_WKADDR	FDIF Work Area address
0x020	FD_CTRL	FD Core Control Register
0x024	FD_DNUM	Detect number
0x028	FD_DCOND	Detect Condition set register
0x02C	FD_STARTX	X Start address
0x030	FD_STARTY	Y Start address
0x034	FD_SIZEX	X Size for detection
0x038	FD_SIZEY	Y Size for detection
0x03C	FD_LHIT	Detect process threshold
0x100	FD_CENTERX1	Detect Result Center X Address
0x104	FD_CENTERY1	Detect Result Center Y Address
0x108	FD_CONFSIZE1	Detect Result Confidence/Size
0x10C	FD_ANGLE1	Detect Angle
0x110	FD_CENTERX2	Detect Result Center X Address
0x114	FD_CENTERY2	Detect Result Center Y Address
0x118	FD_CONFSIZE2	Detect Result Confidence/Size
0x11C	FD_ANGLE2	Detect Angle
0x120	FD_CENTERX3	Detect Result Center X Address
0x124	FD_CENTERY3	Detect Result Center Y Address
0x128	FD_CONFSIZE3	Detect Result Confidence/Size
0x12C	FD_ANGLE3	Detect Angle
0x130	FD_CENTERX4	Detect Result Center X Address
0x134	FD_CENTERY4	Detect Result Center Y Address
0x138	FD_CONFSIZE4	Detect Result Confidence/Size
0x13C	FD_ANGLE4	Detect Angle
0x140	FD_CENTERX5	Detect Result Center X Address
0x144	FD_CENTERY5	Detect Result Center Y Address
0x148	FD_CONFSIZE5	Detect Result Confidence/Size
0x14C	FD_ANGLE5	Detect Angle
0x150	FD_CENTERX6	Detect Result Center X Address
0x154	FD_CENTERY6	Detect Result Center Y Address
0x158	FD_CONFSIZE6	Detect Result Confidence/Size
0x15C	FD_ANGLE6	Detect Angle
0x160	FD_CENTERX7	Detect Result Center X Address
0x164	FD_CENTERY7	Detect Result Center Y Address
0x168	FD_CONFSIZE7	Detect Result Confidence/Size
0x16C	FD_ANGLE7	Detect Angle
0x170	FD_CENTERX8	Detect Result Center X Address
0x174	FD_CENTERY8	Detect Result Center Y Address
0x178	FD_CONFSIZE8	Detect Result Confidence/Size
0x17C	FD_ANGLE8	Detect Angle
0x180	FD_CENTERX9	Detect Result Center X Address
0x184	FD_CENTERY9	Detect Result Center Y Address
0x188	FD_CONFSIZE9	Detect Result Confidence/Size

 Copyright © 2009–2011, Texas Instruments Incorporated

Table 6-44. Face Detection Module Registers (continued)

Offset	Acronym	Register Description
0x18C	FD_ANGLE9	Detect Angle
0x190	FD_CENTERX10	Detect Result Center X Address
0x194	FD_CENTERY10	Detect Result Center Y Address
0x198	FD_CONFSIZE10	Detect Result Confidence/Size
0x19C	FD_ANGLE10	Detect Angle
0x1A0	FD_CENTERX11	Detect Result Center X Address
0x1A4	FD_CENTERY11	Detect Result Center Y Address
0x1A8	FD_CONFSIZE11	Detect Result Confidence/Size
0x1AC	FD_ANGLE11	Detect Angle
0x1B0	FD_CENTERX12	Detect Result Center X Address
0x1B4	FD_CENTERY12	Detect Result Center Y Address
0x1B8	FD_CONFSIZE12	Detect Result Confidence/Size
0x1BC	FD_ANGLE12	Detect Angle
0x1C0	FD_CENTERX13	Detect Result Center X Address
0x1C4	FD_CENTERY13	Detect Result Center Y Address
0x1C8	FD_CONFSIZE13	Detect Result Confidence/Size
0x1CC	FD_ANGLE13	Detect Angle
0x1D0	FD_CENTERX14	Detect Result Center X Address
0x1D4	FD_CENTERY14	Detect Result Center Y Address
0x1D8	FD_CONFSIZE14	Detect Result Confidence/Size
0x1DC	FD_ANGLE14	Detect Angle
0x1E0	FD_CENTERX15	Detect Result Center X Address
0x1E4	FD_CENTERY15	Detect Result Center Y Address
0x1E8	FD_CONFSIZE15	Detect Result Confidence/Size
0x1EC	FD_ANGLE15	Detect Angle
0x1F0	FD_CENTERX16	Detect Result Center X Address
0x1F4	FD_CENTERY16	Detect Result Center Y Address
0x1F8	FD_CONFSIZE16	Detect Result Confidence/Size
0x1FC	FD_ANGLE16	Detect Angle
0x200	FD_CENTERX17	Detect Result Center X Address
0x204	FD_CENTERY17	Detect Result Center Y Address
0x208	FD_CONFSIZE17	Detect Result Confidence/Size
0x20C	FD_ANGLE17	Detect Angle
0x210	FD_CENTERX18	Detect Result Center X Address
0x214	FD_CENTERY18	Detect Result Center Y Address
0x218	FD_CONFSIZE18	Detect Result Confidence/Size
0x21C	FD_ANGLE18	Detect Angle
0x220	FD_CENTERX19	Detect Result Center X Address
0x224	FD_CENTERY19	Detect Result Center Y Address
0x228	FD_CONFSIZE19	Detect Result Confidence/Size
0x22C	FD_ANGLE19	Detect Angle
0x230	FD_CENTERX20	Detect Result Center X Address
0x234	FD_CENTERY20	Detect Result Center Y Address
0x238	FD_CONFSIZE20	Detect Result Confidence/Size
0x23C	FD_ANGLE20	Detect Angle
0x240	FD_CENTERX21	Detect Result Center X Address
0x244	FD_CENTERY21	Detect Result Center Y Address

Copyright © 2009–2011, Texas Instruments Incorporated

Table 6-44. Face Detection Module Registers (continued)

Offset	Acronym	Register Description
0x248	FD_CONFSIZE21	Detect Result Confidence/Size
0x24C	FD_ANGLE21	Detect Angle
0x250	FD_CENTERX22	Detect Result Center X Address
0x254	FD_CENTERY22	Detect Result Center Y Address
0x258	FD_CONFSIZE22	Detect Result Confidence/Size
0x25C	FD_ANGLE22	Detect Angle
0x260	FD_CENTERX23	Detect Result Center X Address
0x264	FD_CENTERY23	Detect Result Center Y Address
0x268	FD_CONFSIZE23	Detect Result Confidence/Size
0x26C	FD_ANGLE23	Detect Angle
0x270	FD_CENTERX24	Detect Result Center X Address
0x274	FD_CENTERY24	Detect Result Center Y Address
0x278	FD_CONFSIZE24	Detect Result Confidence/Size
0x27C	FD_ANGLE24	Detect Angle
0x280	FD_CENTERX25	Detect Result Center X Address
0x284	FD_CENTERY25	Detect Result Center Y Address
0x288	FD_CONFSIZE25	Detect Result Confidence/Size
0x28C	FD_ANGLE25	Detect Angle
0x290	FD_CENTERX26	Detect Result Center X Address
0x294	FD_CENTERY26	Detect Result Center Y Address
0x298	FD_CONFSIZE26	Detect Result Confidence/Size
0x29C	FD_ANGLE26	Detect Angle
0x2A0	FD_CENTERX27	Detect Result Center X Address
0x2A4	FD_CENTERY27	Detect Result Center Y Address
0x2A8	FD_CONFSIZE27	Detect Result Confidence/Size
0x2AC	FD_ANGLE27	Detect Angle
0x2B0	FD_CENTERX28	Detect Result Center X Address
0x2B4	FD_CENTERY28	Detect Result Center Y Address
0x2B8	FD_CONFSIZE28	Detect Result Confidence/Size
0x2BC	FD_ANGLE28	Detect Angle
0x2C0	FD_CENTERX29	Detect Result Center X Address
0x2C4	FD_CENTERY29	Detect Result Center Y Address
0x2C8	FD_CONFSIZE29	Detect Result Confidence/Size
0x2CC	FD_ANGLE29	Detect Angle
0x2D0	FD_CENTERX30	Detect Result Center X Address
0x2D4	FD_CENTERY30	Detect Result Center Y Address
0x2D8	FD_CONFSIZE30	Detect Result Confidence/Size
0x2DC	FD_ANGLE30	Detect Angle
0x2E0	FD_CENTERX31	Detect Result Center X Address
0x2E4	FD_CENTERY31	Detect Result Center Y Address
0x2E8	FD_CONFSIZE31	Detect Result Confidence/Size
0x2EC	FD_ANGLE31	Detect Angle
0x2F0	FD_CENTERX32	Detect Result Center X Address
0x2F4	FD_CENTERY32	Detect Result Center Y Address
0x2F8	FD_CONFSIZE32	Detect Result Confidence/Size
0x2FC	FD_ANGLE32	Detect Angle
0x300	FD_CENTERX33	Detect Result Center X Address

 Copyright © 2009–2011, Texas Instruments Incorporated

Table 6-44. Face Detection Module Registers (continued)

Offset	Acronym	Register Description
0x304	FD_CENTERY33	Detect Result Center Y Address
0x308	FD_CONFSIZE33	Detect Result Confidence/Size
0x30C	FD_ANGLE33	Detect Angle
0x310	FD_CENTERX34	Detect Result Center X Address
0x314	FD_CENTERY34	Detect Result Center Y Address
0x318	FD_CONFSIZE34	Detect Result Confidence/Size
0x31C	FD_ANGLE34	Detect Angle
0x320	FD_CENTERX35	Detect Result Center X Address
0x324	FD_CENTERY35	Detect Result Center Y Address
0x328	FD_CONFSIZE35	Detect Result Confidence/Size
0x32C	FD_ANGLE35	Detect Angle

Copyright © 2009–2011, Texas Instruments Incorporated

6.12.1.6 VPFE Electrical Data/Timing

Table 6-45. Timing Requirements for VPFE PCLK Master/Slave Mode(1) (see Figure 6-31)

NO.				MIN	MAX	UNIT
1	$t_{c(PCLK)}$	Cycle time, PCLK	Slave Mode	8.33	120	ns
			Master Mode	13.33	120	ns
2	$t_{w(PCLKH)}$	Pulse duration, PCLK high		tc(PCLK)* 0.35	tc(PCLK)* 0.65	ns
3	$t_{w(PCLKL)}$	Pulse duration, PCLK low		tc(PCLK)* 0.35	tc(PCLK)* 0.65	ns
4	$t_{t(PCLK)}$	Transition time, PCLK			2	ns

(1) P = 1/SYSCLK4 in nanoseconds (ns). For example, if the SYSCLK4 frequency is 135 MHz, use P = 7.41 ns. See Section 3.3, *Device Clocking*, for more information on the supported clock configurations of the device.

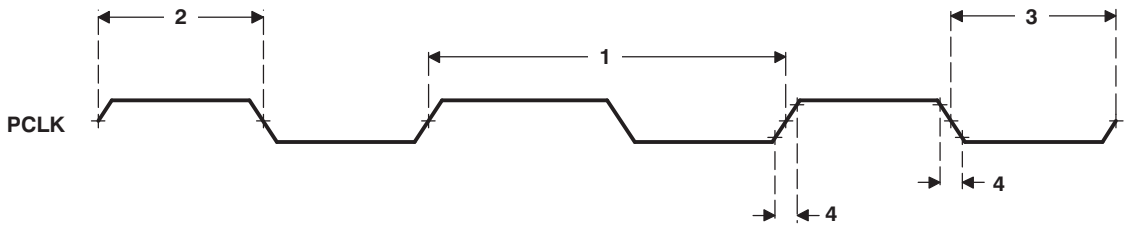

Figure 6-31. VPFE PCLK Timing

Table 6-46. Timing Requirements for VPFE (ISIF) Slave Mode (see Figure 6-32)

NO.				DEVICE MIN	DEVICE MAX	UNIT
5	$t_{su(DATAV-PCLK)}$	Setup time, ISIF DATA valid before PCLK edge	Positive Edge	2.5		ns
			Negative Edge	1.5		
6	$t_{h(PCLK-DATAV)}$	Hold time, ISIF DATA valid after PCLK edge	Positive Edge	1.5		ns
			Negative Edge	2.5		
7	$t_{su(HDV-PCLK)}$	Setup time, HD valid before PCLK edge	Positive Edge	2.5		ns
			Negative Edge	1.5		
8	$t_{h(PCLK-HDV)}$	Hold time, HD valid after PCLK edge	Positive Edge	1.5		ns
			Negative Edge	2.5		
9	$t_{su(VDV-PCLK)}$	Setup time, VD valid before PCLK edge	Positive Edge	2.5		ns
			Negative Edge	1.5		
10	$t_{h(PCLK-VDV)}$	Hold time, VD valid after PCLK edge	Positive Edge	1.5		ns
			Negative Edge	2.5		
11	$t_{su(C_WEV-PCLK)}$	Setup time, C_WE valid before PCLK edge	Positive Edge	2.5		ns
			Negative Edge	1.5		
12	$t_{h(PCLK-C_WEV)}$	Hold time, C_WE valid after PCLK edge	Positive Edge	1.5		ns
			Negative Edge	2.5		
13	$t_{su(C_FIELDV-PCLK)}$	Setup time, C_FIELD valid before PCLK edge	Positive Edge	2.5		ns
			Negative Edge	1.5		
14	$t_{h(PCLK-C_FIELDV)}$	Hold time, C_FIELD valid after PCLK edge	Positive Edge	1.5		ns
			Negative Edge	2.5		

Copyright © 2009–2011, Texas Instruments Incorporated

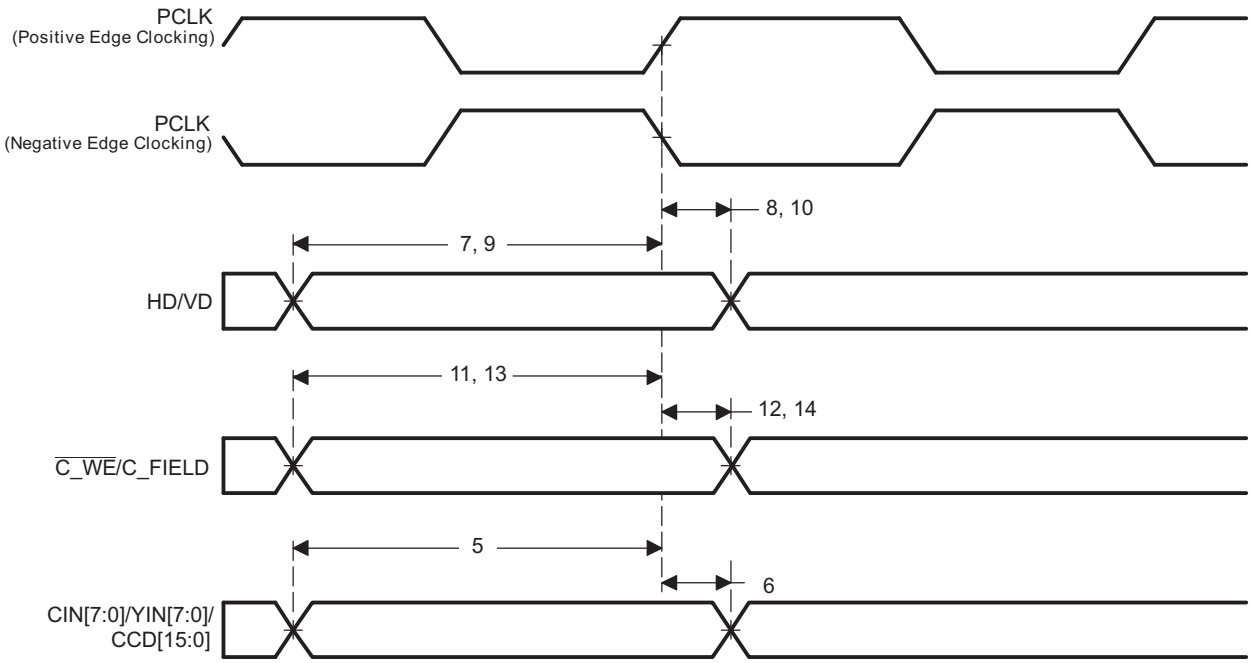

Figure 6-32. VPFE (ISIF) Slave Mode Input Data Timing

Table 6-47. Timing Requirements for VPFE (ISIF) Master Mode(1) (see Figure 6-33)

NO.				DEVICE MIN	DEVICE MAX	UNIT
15	$t_{su(DATAV-PCLK)}$	Setup time, ISIF DATA valid before PCLK edge	Positive Edge	2.5		ns
			Negative Edge	1.5		
16	$t_{h(PCLK-DATAV)}$	Hold time, ISIF DATA valid after PCLK edge	Positive Edge	1.5		ns
			Negative Edge	2.5		
23	$t_{su(CWEV-PCLK)}$	Setup time, C_WE valid before PCLK edge	Positive Edge	2.5		ns
			Negative Edge	1.5		
24	$t_{h(PCLK-CWEV)}$	Hold time, C_WE valid after PCLK edge	Positive Edge	1.5		ns
			Negative Edge	2.5		

(1) The VPFE may be configured to operate in either positive or negative edge clocking mode. When in positive edge clocking mode the rising edge of PCLK is referenced. When in negative edge clocking mode the falling edge of PCLK is referenced.

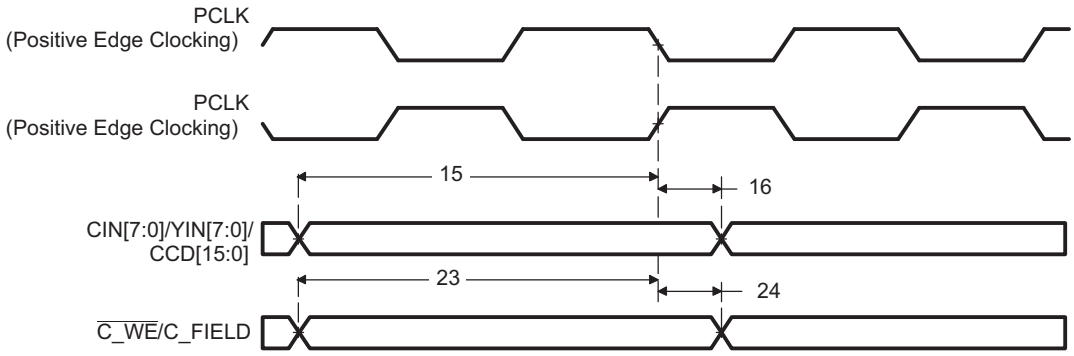

Figure 6-33. VPFE (ISIF) Master Mode Input Data Timing

Table 6-48. Switching Characteristics Over Recommended Operating Conditions for VPFE (ISIF) Master Mode (see Figure 6-34)

NO.	PARAMETER		DEVICE		UNIT
			MIN	MAX	
18	$t_{d(PCLKL-HDIV)}$	Delay time, PCLK edge to HD valid	1.5	11	ns
20	$t_{d(PCLKL-VDIV)}$	Delay time, PCLK edge to VD valid	1.5	11	ns

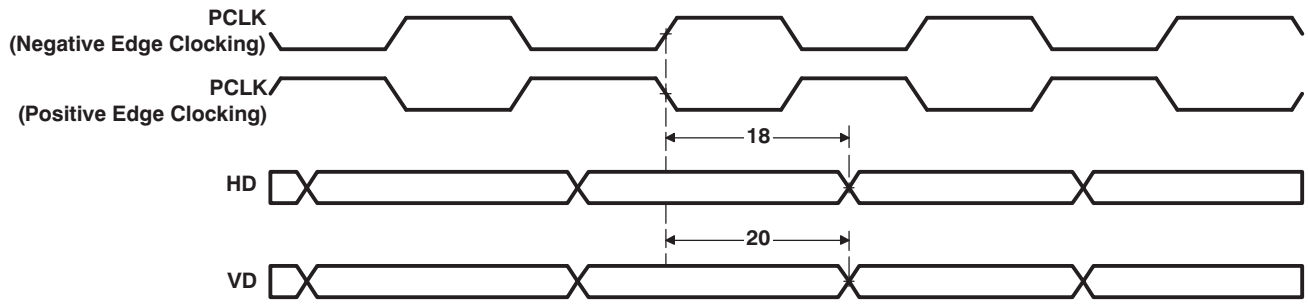

Figure 6-34. VPFE (ISIF) Master Mode Control Output Data Timing

6.12.2 Video Processing Back-End (VPBE)

The Video Processing Back-End of VPBE module is comprised of the On Screen Display (OSD) module and the Video Encoder / Digital LCD Controller (VENC/DLCD).

Table 6-49 lists the Video Processing Back-End (VPBE) module registers, their corresponding acronyms, and the device memory locations (offsets).

Note: HD display mode resolutions are not supported on ARM 216MHz clock rate devices.

Table 6-49. VPBE Module Register Map

Address	Peripheral	Description
0x01C7:0200	VPBE_CLK_CTRL	VPBE Clock Control
0x01C7:1C00	OSD	VPBE On-Screen Display
0x01C7:1E00	VENC	VPBE Video Encoder

6.12.2.1 On-Screen Display (OSD)

The primary function of the OSD module is to gather and blend video data and display/bitmap data and then pass it to the Video Encoder (VENC) in YCbCr format. The video and display data is read from external DDR2/mDDR memory. The OSD is programmed via control and parameter registers. The following are the primary features that are supported by the OSD.

- Support for two video windows and two OSD bitmapped windows that can be displayed simultaneously (VIDWIN0/VIDWIN1 and OSDWIN0/OSDWIN1).
- Video windows support YCbCr data in 422 and 420 formats from external memory, with the ability to interchange the order of the CbCr component in the 32-bit word
- OSD bitmap windows support = 4/8 bit width index data of color palette
- In addition one OSD bitmap window at a time can be configured to one of the following:
  - YUV422 (same as video data)
  - RGB format data in 16-bit mode (R=5bit, G=6bit, B=5bit)
  - 24-bit mode (each R/G/B=8bit) with pixel level blending with video windows
- Programmable color palette with the ability to select between a RAM/ROM table with support for 256 colors.
- Support for 2 ROM tables, one of which can be selected at a given time
- Separate enable/disable control for each window

 Copyright © 2009–2011, Texas Instruments Incorporated

- Programmable width, height, and base starting coordinates for each window
- External memory address and offset registers for each window
- Support for x2 and x4 zoom in both the horizontal and vertical direction
- Pixel-level blending/transparency/blinking attributes can be defined for OSDWIN0 when OSDWIN1 is configured as an attribute window for OSDWIN0.
- Support for blinking intervals to the attribute window
- Ability to select either field/frame mode for the windows (interlaced/progressive)
- An eight step blending process between the bitmap and video windows
- Transparency support for the bitmap and video data (when a bitmap pixel is zero, there will be no blending for that corresponding video pixel)
- Ability to resize from VGA to NTSC/PAL (640x480 to 720x576) for both the OSD and video windows
- Horizontal rescaling x1.5 is supported
- Support for a rectangular cursor window and a programmable background color selection.
- The width, height, and color of the cursor is selectable
- The display priority is: Rectangular-Cursor > OSDWIN1 > OSDWIN0 > VIDWIN1 > VIDWIN0 > background color
- Support for attenuation of the YCbCr values for the REC601 standard.

The following restrictions exist in the OSD module.

- If the vertical resize filter is enabled for either of the video windows, the maximum horizontal window dimension cannot be greater than 1024 currently. This is due to the limitation in the size of the line memory.
- It is not possible to use both of the CLUT ROMs at the same time. However, a window can use RAM while another uses ROM.

Table 6-50 lists the On-Screen Display (OSD) registers, their corresponding acronyms, and the device memory locations (offsets).

Table 6-50. On-Screen Display (OSD) Registers

Offset	Acronym	Register Description
0h	MODE	OSD Mode Setup
4h	VIDWINMD	Video Window Mode Setup
8h	OSDWIN0MD	Bitmap Window 0 Mode Setup
Ch	OSDWIN1MD	OSD Window 1 Mode Setup (when used as a second OSD window)
Ch	OSDATRMD	OSD Attribute Window Mode Setup (when used as an attribute window)
10h	RECTCUR	Rectangular Cursor Setup
14h	RSV0	Reserved
18h	VIDWIN0OFST	Video Window 0 Offset
1Ch	VIDWIN1OFST	Video Window 1 Offset
20h	OSDWIN0OFST	Bitmap Window 0 Offset
24h	OSDWIN1OFST	Bitmap Window 1/Attribute Window Offset
28h	VIDWINADH	Video Window 0/1 Address - High
2Ch	VIDWIN0ADL	Video Window 0 Address - Low
30h	VIDWIN1ADL	Video Window 1 Address - Low
34h	OSDWINADH	BMP Window 0/1 Address - High
38h	OSDWIN0ADL	BMP Window 0 Address - Low
3Ch	OSDWIN1ADL	Bitmap Window 1/Attribute Address - Low
40h	BASEPX	Base Pixel X

Table 6-50. On-Screen Display (OSD) Registers (continued)

Offset	Acronym	Register Description
44h	BASEPY	Base Pixel Y
48h	VIDWIN0XP	Video Window 0 X-Position
4Ch	VIDWIN0YP	Video Window 0 Y-Position
50h	VIDWIN0XL	Video Window 0 X-Size
54h	VIDWIN0YL	Video Window 0 Y-Size
58h	VIDWIN1XP	Video Window 1 X-Position
5Ch	VIDWIN1YP	Video Window 1 Y-Position
60h	VIDWIN1XL	Video Window 1 X-Size
64h	VIDWIN1YL	Video Window 1 Y-Size
68h	OSDWIN0XP	Bitmap Window 0 X-Position
6Ch	OSDWIN0YP	Bitmap Window 0 Y-Position
70h	OSDWIN0XL	Bitmap Window 0 X-Size
74h	OSDWIN0YL	Bitmap Window 0 Y-Size
78h	OSDWIN1XP	Bitmap Window 1 X-Position
7Ch	OSDWIN1YP	Bitmap Window 1 Y-Position
80h	OSDWIN1XL	Bitmap Window 1 X-Size
84h	OSDWIN1YL	Bitmap Window 1 Y-Size
88h	CURXP	Rectangular Cursor Window X-Position
8Ch	CURYP	Rectangular Cursor Window Y-Position
90h	CURXL	Rectangular Cursor Window X-Size
94h	CURYL	Rectangular Cursor Window Y-Size
98h	RSV1	Reserved
9Ch	RSV2	Reserved
A0h	W0BMP01	Window 0 Bitmap Value to Palette Map 0/1
A4h	W0BMP23	Window 0 Bitmap Value to Palette Map 2/3
A8h	W0BMP45	Window 0 Bitmap Value to Palette Map 4/5
ACh	W0BMP67	Window 0 Bitmap Value to Palette Map 6/7
B0h	W0BMP89	Window 0 Bitmap Value to Palette Map 8/9
B4h	W0BMPAB	Window 0 Bitmap Value to Palette Map A/B
B8h	W0BMPCD	Window 0 Bitmap Value to Palette Map C/D
BCh	W0BMPEF	Window 0 Bitmap Value to Palette Map E/F
C0h	W1BMP01	Window 1 Bitmap Value to Palette Map 0/1
C4h	W1BMP23	Window 1 Bitmap Value to Palette Map 2/3
C8h	W1BMP45	Window 1 Bitmap Value to Palette Map 4/5
CCh	W1BMP67	Window 1 Bitmap Value to Palette Map 6/7
D0h	W1BMP89	Window 1 Bitmap Value to Palette Map 8/9
D4h	W1BMPAB	Window 1 Bitmap Value to Palette Map A/B
D8h	W1BMPCD	Window 1 Bitmap Value to Palette Map C/D
DCh	W1BMPEF	Window 1 Bitmap Value to Palette Map E/F
E0h	VBNDRY	Test Mode
E4h	EXTMODE	Extended Mode
E8h	MISCCTL	Miscellaneous Control
ECh	CLUTRAMYCB	CLUT RAM Y/Cb Setup
F0h	CLUTRAMCR	CLUT RAM Cr/Mapping Setup
F4h	TRANSPVALL	Transparent Color Code - Lower
F8h	TRANSPVALU	Transparent Color Code - Upper
FCh	TRANSPBMPIDX	Transparent Index Code for Bitmaps

Copyright © 2009–2011, Texas Instruments Incorporated

6.12.2.2 Video Encoder / Digital LCD Controller (VENC/DLCD)

The VENC/DLCD consists of three major blocks:

- Video encoder to generate analog video output
- Digital LCD controller to generate digital RGB/YCbCr data output and timing signals
- Timing generator

The video encoder for analog video supports the following features:

- Master Clock Input - 27 MHz or 74.25 MHz
- SDTV Support
  - Composite NTSC-M, PAL-B/D/G/H/I
  - S-Video (Y/C)
  - Component YPbPr
  - RGB
  - CGMS/WSS
  - Closed Caption
- HDTV Support
  - 525p/625p/720p/1080i
  - Component YPbPr
  - RGB
  - CGMS/WSS
- Master/Slave Operation
- Three 10-bit D/A Converters

The digital LCD controller supports the following features:

- Programmable Timing Generator
- Various Output Formats
  - YCbCr 4:2:2 16-bit
  - YCbCr 4:2:2 8-bit
  - Parallel RGB 16/18/24-bit
  - Serial RGB 8-bit
- EAV/SAV insertion
- Master/Slave Operation

Table 6-51 lists the Video Encoder / Digital LCD Controller (VENC/DLCD) registers, their corresponding acronyms, and the device memory locations (offsets).

Table 6-51. Video Encoder (VENC) Registers

Offset	Acronym	Register Description
0h	VMOD	Video Mode
4h	VIOCTL	Video Interface I/O Control
8h	VDPRO	Video Data Processing
Ch	SYNCCTL	Sync Control
10h	HSPLS	Horizontal Sync Pulse Width
14h	VSPLS	Vertical Sync Pulse Width
18h	HINTVL	Horizontal Interval
1Ch	HSTART	Horizontal Valid Data Start Position
20h	HVALID	Horizontal Data Valid Range
24h	VINTVL	Vertical Interval
28h	VSTART	Vertical Valid Data Start Position

Table 6-51. Video Encoder (VENC) Registers (continued)

Offset	Acronym	Register Description
2Ch	VVALID	Vertical Data Valid Range
30h	HSDLY	Horizontal Sync Delay
34h	VSDLY	Vertical Sync Delay
38h	YCCCTL	YCbCr Control
3Ch	RGBCTL	RGB Control
40h	RGBCLP	RGB Level Clipping
44h	LINECTL	Line ID Control
48h	CULLLINE	Culling Line Control
4Ch	LCDOUT	LCD Output Signal Control
50h	BRT0	Brightness Start Position Signal Control
54h	BRT1	Brightness Width Signal Control
58h	ACCTL	LCD_AC Signal Control
5Ch	PWM0	PWM Output Period
60h	PWM1	PWM Output Pulse Width
64h	DCLKCTL	DCLK Control
68h	DCLKPTN0	DCLK Pattern 0
6Ch	DCLKPTN1	DCLK Pattern 1
70h	DCLKPTN2	DCLK Pattern 2
74h	DCLKPTN3	DCLK Pattern 3
78h	DCLKPTN0A	DCLK Auxiliary Pattern 0
7Ch	DCLKPTN1A	DCLK Auxiliary Pattern 1
80h	DCLKPTN2A	DCLK Auxiliary Pattern 2
84h	DCLKPTN3A	DCLK Auxiliary Pattern 3
88h	DCLKHSTT	Horizontal DCLK Mask Start Position
8Ch	DCLKHSTTA	Horizontal Auxiliary DCLK Mask Start Position
90h	DCLKHVLD	Horizontal DCLK Mask Range
94h	DCLKVSTT	Vertical DCLK Mask Start Position
98h	DCLKVVLD	Vertical DCLK Mask Range
9Ch	CAPCTL	Closed Caption Control
A0h	CAPDO	Closed Caption Odd Field Data
A4h	CAPDE	Closed Caption Even Field Data
A8h	ATR0	Video Attribute Data 0
ACh	ATR1	Video Attribute Data 1
B0h	ATR2	Video Attribute Data 2
B4h	RSV0	Reserved 0
B8h	VSTAT	Video Status
BCh	RAMADR	GCP/FRC Table RAM Address
C0h	RAMPORT	GCP/FRC Table RAM Data Port
C4h	DACTST	DAC Test
C8h	YCOLVL	YOUT and COUT Levels
CCh	SCPROG	Sub-Carrier Programming
D0h	RSV1	Reserved 1
D4h	RSV2	Reserved 2
D8h	RSV3	Reserved 3
DCh	CVBS	Composite Mode
E0h	CMPNT	Component Mode
E4h	ETMG0	CVBS Timing Control 0

Copyright © 2009–2011, Texas Instruments Incorporated

Table 6-51. Video Encoder (VENC) Registers (continued)

Offset	Acronym	Register Description
E8h	ETMG1	CVBS Timing Control 1
ECh	ETMG2	CVBS Timing Control 2
F0h	ETMG3	CVBS Timing Control 3
F4h	DACSEL	DAC Output Select
100h	ARGBX0	Analog RGB Matrix 0
104h	ARGBX1	Analog RGB Matrix 1
108h	ARGBX2	Analog RGB Matrix 2
10Ch	ARGBX3	Analog RGB Matrix 3
110h	ARGBX4	Analog RGB Matrix 4
114h	DRGBX0	Digital RGB Matrix 0
118h	DRGBX1	Digital RGB Matrix 1
11Ch	DRGBX2	Digital RGB Matrix 2
120h	DRGBX3	Digital RGB Matrix 3
124h	DRGBX4	Digital RGB Matrix 4
128h	VSTARTA	Vertical Data Valid Start Position For Even Field
12Ch	OSDCLK0	OSD Clock Control 0
130h	OSDCLK1	OSD Clock Control 1
134h	HVLDCL0	Horizontal Valid Culling Control 0
138h	HVLDCL1	Horizontal Valid Culling Control 1
13Ch	OSDHADV	OSD Horizontal Sync Advance
140h	CLKCTL	Clock Control
144h	GAMCTL	Enable Gamma Correction
148h	VVALIDA	Vertical Data Valid Area For Even Field
14Ch	BATR0	Video Attribute 0 For Type B Packet
150h	BATR1	Video Attribute 1 For Type B Packet
154h	BATR2	Video Attribute 2 For Type B Packet
158h	BATR3	Video Attribute 3 For Type B Packet
15Ch	BATR4	Video Attribute 4 For Type B Packet
160h	BATR5	Video Attribute 5 For Type B Packet
164h	BATR6	Video Attribute 6 For Type B Packet
168h	BATR7	Video Attribute 7 For Type B Packet
16Ch	BATR8	Video Attribute 8 For Type B Packet
170h	DACAMP	Gain and Offset

6.12.2.3 VPBE Electrical Data/Timing

Table 6-52. Timing Requirements for VPBE CLK Inputs (see Figure 6-35)

NO.			DEVICE		UNIT
			MIN	MAX	
1	$t_{c(PCLK)}$	Cycle time, PCLK(1)	13.33	160	ns
2	$t_{w(PCLKH)}$	Pulse duration, PCLK high	5.7		ns
3	$t_{w(PCLKL)}$	Pulse duration, PCLK low	5.7		ns
4	$t_{t(PCLK)}$	Transition time, PCLK		3	ns
5	$t_{c(EXTCLK)}$	Cycle time, EXTCLK	13.33	160	ns
6	$t_{w(EXTCLKH)}$	Pulse duration, EXTCLK high	5.7		ns
7	$t_{w(EXTCLKL)}$	Pulse duration, EXTCLK low	5.7		ns

(1) For timing specifications relating to PCLK see Table 6-45, *Timing Requirements for VPFE PCLK Master/Slave Mode*.

Table 6-52. Timing Requirements for VPBE CLK Inputs (see Figure 6-35) (continued)

NO.			DEVICE		UNIT
			MIN	MAX	
8	$t_{t(EXTCLK)}$	Transition time, EXTCLK		3	ns

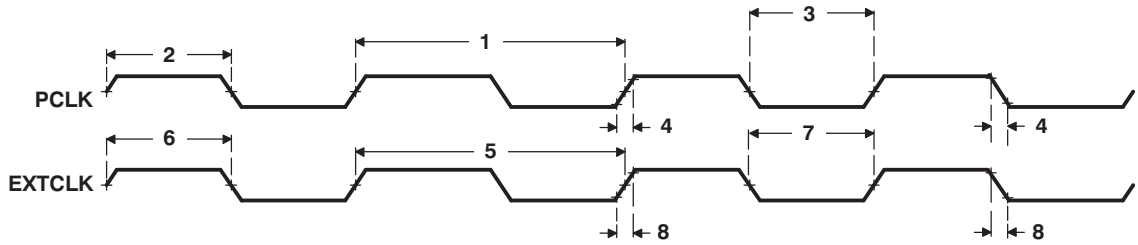

Figure 6-35. VPBE PCLK and EXTCLK Timing

Table 6-53. Timing Requirements for VPBE Control Input With Respect to PCLK and EXTCLK(1) (2) (3) (see Figure 6-36)

NO.				DEVICE		UNIT
				MIN	MAX	
9	$t_{su(VCTLV-VCLKIN)}$	Setup time, VCTL valid before VCLKIN edge	Positive Edge	4		ns
			Negative Edge	3		
10	$t_{h(VCLKIN-VCTLV)}$	Hold time, VCTL valid after VCLKIN edge	Positive Edge	1		ns
			Negative Edge	2		

(1) The VPBE may be configured to operate in either positive or negative edge clocking mode. When in positive edge clocking mode, the rising edge of VCLKIN is referenced. When in negative edge clocking mode, the falling edge of VCLKIN is referenced.
(2) VCTL = HSYNC, VSYNC, and FIELD
(3) VCLKIN = PCLK or EXTCLK. Positive and Negative Edge apply to PCLK only; EXTCLK does not support Negative Edge clocking.

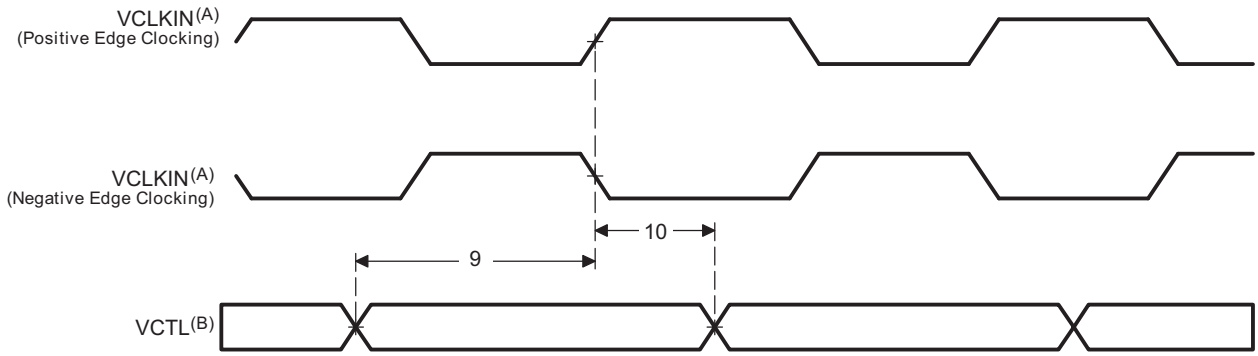

A. VCLKIN = PCLK or EXTCLK. Note Positive and Negative edge apply for PCLK only, EXTCLK does not support negative edge clocking.
B. VCTL = HSYNC, VSYNC, and FIELD

Figure 6-36. VPBE Input Timing With Respect to PCLK and EXTCLK

Copyright © 2009–2011, Texas Instruments Incorporated

Table 6-54. Switching Characteristics Over Recommended Operating Conditions for VPBE Control and Data Output With Respect to PCLK and EXTCLK(1) (2) (3) (see Figure 6-37)

NO.	PARAMETER			DEVICE MIN	DEVICE MAX	UNIT
11	$t_{d(VCLKIN-VCTLV)}$	Delay time, VCLKIN edge to VCTL valid	Positive Edge		15	ns
			Negative Edge		16	
12	$t_{d(VCLKIN-VCTLIV)}$	Delay time, VCLKIN edge to VCTL invalid		2		ns
13	$t_{d(VCLKIN-VDATAV)}$	Delay time, VCLKIN edge to VDATA valid	VCLKIN = EXTCLK		15	ns
			VCLKIN = PCLK		17.5	
14	$t_{d(VCLKIN-VDATAIV)}$	Delay time, VCLKIN edge to VDATA invalid		2		ns

(1) The VPBE may be configured to operate in either positive or negative edge clocking mode. When in positive edge clocking mode, the rising edge of VCLKIN is referenced. When in negative edge clocking mode, the falling edge of VCLKIN is referenced.
(2) VCLKIN = PCLK or EXTCLK. Positive and Negative Edge apply to PCLK only; EXTCLK does not support Negative Edge clocking.
(3) VCTL = HSYNC, VSYNC, FIELD, and LCD_OE.

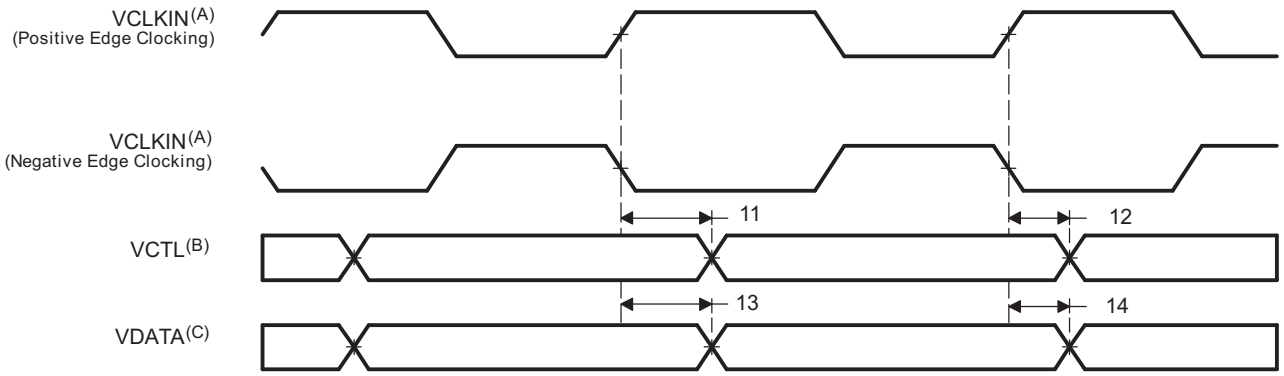

A. VCLKIN = PCLK or EXTCLK. Note Positive and Negative edge apply for PCLK only, EXTCLK does not support negative edge clocking.
B. VCTL = HSYNC, VSYNC, FIELD, and LCD_OE
C. VDATA = COUT[7:0], YOUT[7:0], R[7:0], G[7:0], and B[7:0]

Figure 6-37. VPBE Control and Data Output With Respect to PCLK and EXTCLK

Table 6-55. Switching Characteristics Over Recommended Operating Conditions for VPBE Control and Data Output With Respect to VCLK(1) (2) (3)(see Figure 6-38)

NO.	PARAMETER		DEVICE		UNIT
			MIN	MAX	
17	$t_{c(VCLK)}$	Cycle time, VCLK	13.33	160	ns
18	$t_{w(VCLKH)}$	Pulse duration, VCLK high	5.7		ns
19	$t_{w(VCLKL)}$	Pulse duration, VCLK low	5.7		ns
20	$t_{t(VCLK)}$	Transition time, VCLK		3	ns
21	$t_{d(VCLKINH-VCLKH)}$	Delay time, VCLKIN high to VCLK high	3	16	ns
22	$t_{d(VCLKINL-VCLKL)}$	Delay time, VCLKIN low to VCLK low	3	16	ns
23	$t_{d(VCLK-VCTLV)}$	Delay time, VCLK edge to VCTL valid		1.5	ns
24	$t_{d(VCLK-VCTLIV)}$	Delay time, VCLK edge to VCTL invalid	-1.5		ns
25	$t_{d(VCLK-VDATAV)}$	Delay time, VCLK edge to VDATA valid		1.5	ns
26	$t_{d(VCLK-VDATAIV)}$	Delay time, VCLK edge to VDATA invalid	-1.5		ns

(1) The VPBE may be configured to operate in either positive or negative edge clocking mode. When in positive edge clocking mode, the rising edge of VCLK is referenced. When in negative edge clocking mode, the falling edge of VCLK is referenced.
(2) VCLKIN = PCLK or EXTCLK. Positive and Negative edge apply for PCLK only, EXTCLK does not support negative edge clocking. For timing specifications relating to PCLK, see Table 6-45, *Timing Requirements for VPFE PCLK Master/Slave Mode*.
(3) VCTL= HSYNC, VSYNC, FIELD and LCD_OE.

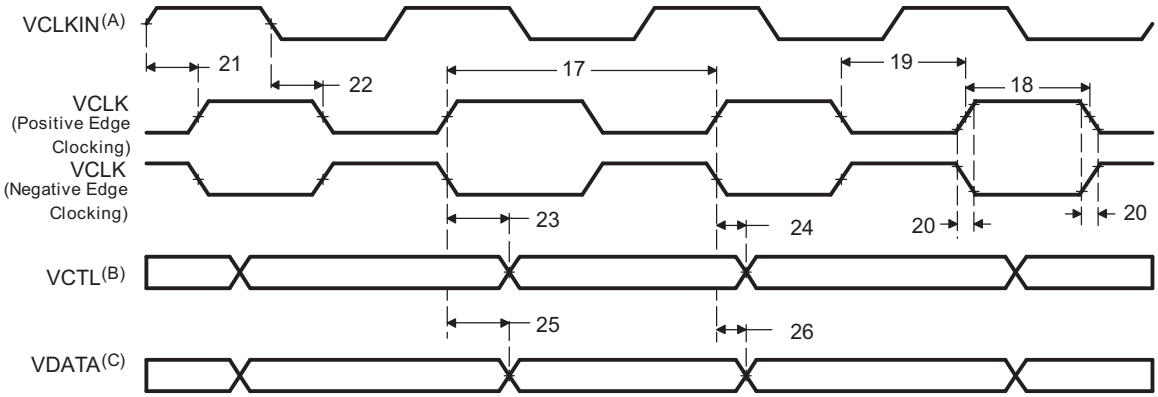

A. VCLKIN = PCLK or EXTCLK. Note Positive and Negative edge apply for PCLK only, EXTCLK does not support negative edge clocking.
B. VCTL = HSYNC, VSYNC, FIELD, and LCD_OE
C. VDATA = COUT[7:0], YOUT[7:0], R[7:0], G[7:0], and B[7:0]

Figure 6-38. VPBE Control and Data Output Timing With Respect to VCLK

6.12.2.4 High-Definition (HD) DACs and Video Buffer Electrical Data/Timing

Three DACs and a video buffer are available on the device.

6.12.2.4.1 HD DACs-Only Option

In the HD DACs-only configuration, the internal video buffer is not used and an external video buffer is attached to the DACs. Another solution is to use a Video Amplifier, such as the Texas Instruments' THS7303 which provides a complete solution to the typical output circuit shown in Figure 6-39.

Note: HD display mode resolutions are not supported on ARM 216MHz clock rate devices.

 Copyright © 2009–2011, Texas Instruments Incorporated

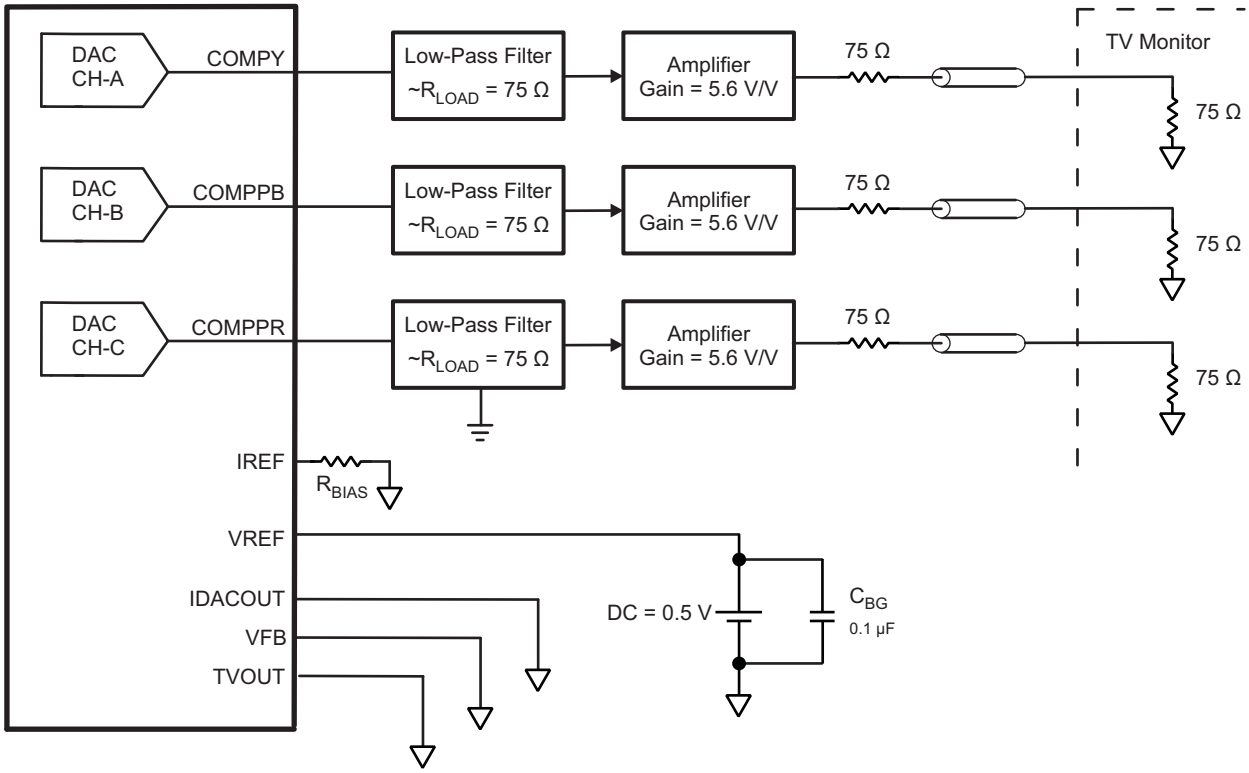

A. RBIAS = 2400Ω.
B. VREF = 0.5V (from external supply).
C. IDACOUT must be connected to V_{SS} or left open for proper device configuration.
D. VFB must be connected to V_{SS} or left open for proper device configuration.
E. TVOUT must be connected to V_{SS} or left open for proper device configuration.

Figure 6-39. HD Video DAC Application Example

6.12.2.4.2 DAC With Video Buffer Option

In a DAC plus video buffer configuration, one of the DACs may be used along with the video buffer for standard definition TVOUT mode. In the DAC plus video buffer configuration, the DAC and internal video buffer are both used, and a TV cable may be attached directly to the output of the video buffer.Figure 6-40 shows an example of the DAC Plus Video Buffer Option circuit configuration.

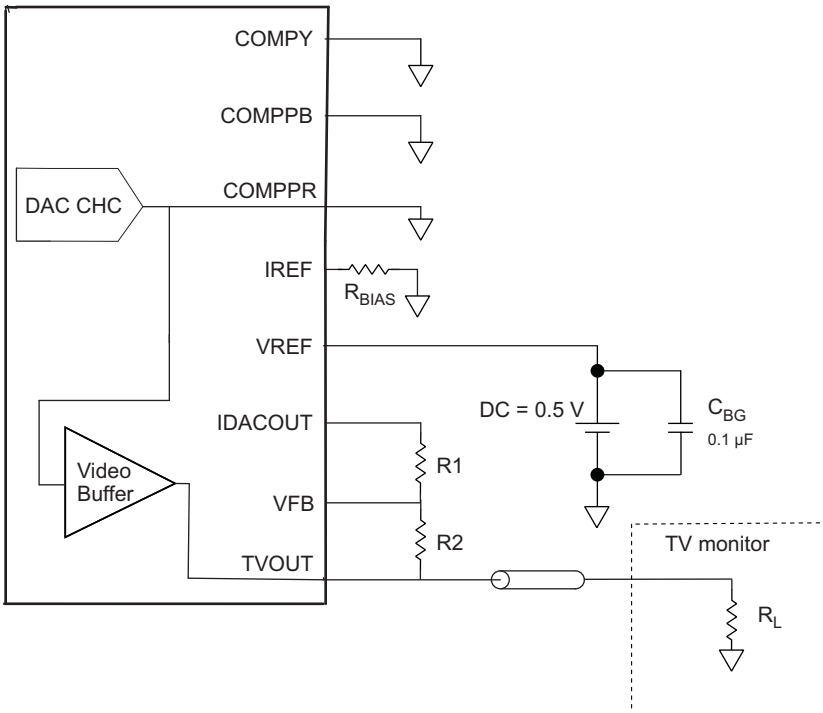

Figure 6-40. SD Video Buffer Application Example

Copyright © 2009–2011, Texas Instruments Incorporated

6.13 USB 2.0

The USB2.0 peripheral supports the following features:

- USB 2.0 peripheral at speeds high speed (HS: 480 Mb/s) and full speed (FS: 12 Mb/s)
- USB 2.0 host at speeds HS, FS, and low speed (LS: 1.5 Mb/s)
- All transfer modes (control, bulk, interrupt, and isochronous)
- Four Transmit (TX) and four Receive (RX) endpoints in addition to endpoint 0
- FIFO RAM
  - 4K bytes shared by all endpoints.
  - Programmable FIFO size
- Includes a DMA sub-module that supports four TX and four RX channels of CPPI 3.0 DMAs
- RNDIS mode for accelerating RNDIS type protocols using short packet termination over USB
- USB OTG extensions, i.e. session request protocol (SRP) and host negotiation protocol (HNP)

The USB2.0 peripheral does not support the following features:

- On-chip charge pump
- High bandwidth ISO mode is not supported (triple buffering)
- RNDIS mode acceleration for USB sizes that are not multiples of 64 bytes
- Endpoint max USB packet sizes that do not conform to the USB 2.0 spec (for FS/LS: 8, 16, 32, 64, and 1023 are defined; for HS: 64, 128, 512, and 1024 are defined)

6.13.1 USB Peripheral Register Description(s)

Table 6-56 lists the USB registers, their corresponding acronyms, and the device memory locations (offsets).

Table 6-56. Universal Serial Bus (USB) Registers

Offset	Acronym	Register Description
4h	CTRLR	Control Register
8h	STATR	Status Register
10h	RNDISR	RNDIS Register
14h	AUTOREQ	Autorequest Register
20h	INTSRCR	USB Interrupt Source Register
24h	INTSETR	USB Interrupt Source Set Register
28h	INTCLRR	USB Interrupt Source Clear Register
2Ch	INTMSKR	USB Interrupt Mask Register
30h	INTMSKSETR	USB Interrupt Mask Set Register
34h	INTMSKCLRR	USB Interrupt Mask Clear Register
38h	INTMASKEDR	USB Interrupt Source Masked Register
3Ch	EOIR	USB End of Interrupt Register
40h	INTVECTR	USB Interrupt Vector Register
80h	TCPPICR	Transmit CPPI Control Register
84h	TCPPITDR	Transmit CPPI Teardown Register
88h	TCPPIEOIR	Transmit CPPI DMA Controller End of Interrupt Register
8Ch	Reserved	-
90h	TCPPIMSKSR	Transmit CPPI Masked Status Register
94h	TCPPIRAWSR	Transmit CPPI Raw Status Register
98h	TCPPIIENSETR	Transmit CPPI Interrupt Enable Set Register
9Ch	TCPPIIENCLRR	Transmit CPPI Interrupt Enable Clear Register
C0h	RCPPICR	Receive CPPI Control Register
D0h	RCPPIMSKSR	Receive CPPI Masked Status Register

Copyright © 2009–2011, Texas Instruments Incorporated

Table 6-56. Universal Serial Bus (USB) Registers (continued)

Offset	Acronym	Register Description
D4h	RCPPIRAWSR	Receive CPPI Raw Status Register
D8h	RCPPIENSETR	Receive CPPI Interrupt Enable Set Register
DCh	RCPPIIENCLRR	Receive CPPI Interrupt Enable Clear Register
E0h	RBUFCNT0	Receive Buffer Count 0 Register
E4h	RBUFCNT1	Receive Buffer Count 1 Register
E8h	RBUFCNT2	Receive Buffer Count 2 Register
ECh	RBUFCNT3	Receive Buffer Count 3 Register
Transmit/Receive CPPI Channel 0 State Block		
100h	TCPPIDMASTATEW0	Transmit CPPI DMA State Word 0
104h	TCPPIDMASTATEW1	Transmit CPPI DMA State Word 1
108h	TCPPIDMASTATEW2	Transmit CPPI DMA State Word 2
10Ch	TCPPIDMASTATEW3	Transmit CPPI DMA State Word 3
110h	TCPPIDMASTATEW4	Transmit CPPI DMA State Word 4
114h	TCPPIDMASTATEW5	Transmit CPPI DMA State Word 5
11Ch	TCPPICOMPPTR	Transmit CPPI Completion Pointer
120h	RCPPIDMASTATEW0	Receive CPPI DMA State Word 0
124h	RCPPIDMASTATEW1	Receive CPPI DMA State Word 1
128h	RCPPIDMASTATEW2	Receive CPPI DMA State Word 2
12Ch	RCPPIDMASTATEW3	Receive CPPI DMA State Word 3
130h	RCPPIDMASTATEW4	Receive CPPI DMA State Word 4
134h	RCPPIDMASTATEW5	Receive CPPI DMA State Word 5
138h	RCPPIDMASTATEW6	Receive CPPI DMA State Word 6
13Ch	RCPPICOMPPTR	Receive CPPI Completion Pointer
Transmit/Receive CPPI Channel 1 State Block		
140h	TCPPIDMASTATEW0	Transmit CPPI DMA State Word 0
144h	TCPPIDMASTATEW1	Transmit CPPI DMA State Word 1
148h	TCPPIDMASTATEW2	Transmit CPPI DMA State Word 2
14Ch	TCPPIDMASTATEW3	Transmit CPPI DMA State Word 3
150h	TCPPIDMASTATEW4	Transmit CPPI DMA State Word 4
154h	TCPPIDMASTATEW5	Transmit CPPI DMA State Word 5
15Ch	TCPPICOMPPTR	Transmit CPPI Completion Pointer
160h	RCPPIDMASTATEW0	Receive CPPI DMA State Word 0
164h	RCPPIDMASTATEW1	Receive CPPI DMA State Word 1
168h	RCPPIDMASTATEW2	Receive CPPI DMA State Word 2
16Ch	RCPPIDMASTATEW3	Receive CPPI DMA State Word 3
170h	RCPPIDMASTATEW4	Receive CPPI DMA State Word 4
174h	RCPPIDMASTATEW5	Receive CPPI DMA State Word 5
178h	RCPPIDMASTATEW6	Receive CPPI DMA State Word 6
17Ch	RCPPICOMPPTR	Receive CPPI Completion Pointer
Transmit/Receive CPPI Channel 2 State Block		
180h	TCPPIDMASTATEW0	Transmit CPPI DMA State Word 0
184h	TCPPIDMASTATEW1	Transmit CPPI DMA State Word 1
188h	TCPPIDMASTATEW2	Transmit CPPI DMA State Word 2
18Ch	TCPPIDMASTATEW3	Transmit CPPI DMA State Word 3
190h	TCPPIDMASTATEW4	Transmit CPPI DMA State Word 4
194h	TCPPIDMASTATEW5	Transmit CPPI DMA State Word 5
19Ch	TCPPICOMPPTR	Transmit CPPI Completion Pointer

Copyright © 2009–2011, Texas Instruments Incorporated

Table 6-56. Universal Serial Bus (USB) Registers (continued)

Offset	Acronym	Register Description
1A0h	RCPPIDMASTATEW0	Receive CPPI DMA State Word 0
1A4h	RCPPIDMASTATEW1	Receive CPPI DMA State Word 1
1A8h	RCPPIDMASTATEW2	Receive CPPI DMA State Word 2
1ACh	RCPPIDMASTATEW3	Receive CPPI DMA State Word 3
1B0h	RCPPIDMASTATEW4	Receive CPPI DMA State Word 4
1B4h	RCPPIDMASTATEW5	Receive CPPI DMA State Word 5
1B8h	RCPPIDMASTATEW6	Receive CPPI DMA State Word 6
1BCh	RCPPICOMPPTR	Receive CPPI Completion Pointer
Transmit/Receive CPPI Channel 3 State Block		
1C0h	TCPPIDMASTATEW0	Transmit CPPI DMA State Word 0
1C4h	TCPPIDMASTATEW1	Transmit CPPI DMA State Word 1
1C8h	TCPPIDMASTATEW2	Transmit CPPI DMA State Word 2
1CCh	TCPPIDMASTATEW3	Transmit CPPI DMA State Word 3
1D0h	TCPPIDMASTATEW4	Transmit CPPI DMA State Word 4
1D4h	TCPPIDMASTATEW5	Transmit CPPI DMA State Word 5
1DCh	TCPPICOMPPTR	Transmit CPPI Completion Pointer
1E0h	RCPPIDMASTATEW0	Receive CPPI DMA State Word 0
1E4h	RCPPIDMASTATEW1	Receive CPPI DMA State Word 1
1E8h	RCPPIDMASTATEW2	Receive CPPI DMA State Word 2
1ECh	RCPPIDMASTATEW3	Receive CPPI DMA State Word 3
1F0h	RCPPIDMASTATEW4	Receive CPPI DMA State Word 4
1F4h	RCPPIDMASTATEW5	Receive CPPI DMA State Word 5
1F8h	RCPPIDMASTATEW6	Receive CPPI DMA State Word 6
1FCh	RCPPICOMPPTR	Receive CPPI Completion Pointer
Common USB Registers		
400h	FADDR	Function Address Register
401h	POWER	Power Management Register
402h	INTRTX	Interrupt Register for Endpoint 0 plus Transmit Endpoints 1 to 4
404h	INTRRX	Interrupt Register for Receive Endpoints 1 to 4
406h	INTRTXE	Interrupt enable register for INTRTX
408h	INTRRXE	Interrupt Enable Register for INTRRX
40Ah	INTRUSB	Interrupt Register for Common USB Interrupts
40Bh	INTRUSBE	Interrupt Enable Register for INTRUSB
40Ch	FRAME	Frame Number Register
40Eh	INDEX	Index Register for Selecting the Endpoint Status and Control Registers
40Fh	TESTMODE	Register to Enable the USB 2.0 Test Modes
Indexed Registers These registers operate on the endpoint selected by the INDEX register		
410h	TXMAXP	Maximum Packet Size for Peripheral/Host Transmit Endpoint. (Index register set to select Endpoints 1-4)
412h	PERI_CSR0	Control Status Register for Endpoint 0 in Peripheral Mode. (Index register set to select Endpoint 0)
	HOST_CSR0	Control Status Register for Endpoint 0 in Host Mode. (Index register set to select Endpoint 0)
	PERI_TXCSR	Control Status Register for Peripheral Transmit Endpoint. (Index register set to select Endpoints 1-4)
	HOST_TXCSR	Control Status Register for Host Transmit Endpoint. (Index register set to select Endpoints 1-4)

Table 6-56. Universal Serial Bus (USB) Registers (continued)

Offset	Acronym	Register Description
414h	RXMAXP	Maximum Packet Size for Peripheral/Host Receive Endpoint. (Index register set to select Endpoints 1-4)
416h	PERI_RXCSR	Control Status Register for Peripheral Receive Endpoint. (Index register set to select Endpoints 1-4)
	HOST_RXCSR	Control Status Register for Host Receive Endpoint. (Index register set to select Endpoints 1-4)
418h	COUNT0	Number of Received Bytes in Endpoint 0 FIFO. (Index register set to select Endpoint 0)
	RXCOUNT	Number of Bytes in Host Receive Endpoint FIFO. (Index register set to select Endpoints 1- 4)
41Ah	HOST_TYPE0	Defines the speed of Endpoint 0
	HOST_TXTYPE	Sets the operating speed, transaction protocol and peripheral endpoint number for the host Transmit endpoint. (Index register set to select Endpoints 1-4)
41Bh	HOST_NAKLIMIT0	Sets the NAK response timeout on Endpoint 0. (Index register set to select Endpoint 0)
	HOST_TXINTERVAL	Sets the polling interval for Interrupt/ISOC transactions or the NAK response timeout on Bulk transactions for host Transmit endpoint. (Index register set to select Endpoints 1-4)
41Ch	HOST_RXTYPE	Sets the operating speed, transaction protocol and peripheral endpoint number for the host Receive endpoint. (Index register set to select Endpoints 1-4)
41Dh	HOST_RXINTERVAL	Sets the polling interval for Interrupt/ISOC transactions or the NAK response timeout on Bulk transactions for host Receive endpoint. (Index register set to select Endpoints 1-4)
41Fh	CONFIGDATA	Returns details of core configuration. (Index register set to select Endpoint 0)
FIFOn		
420h	FIFO0	Transmit and Receive FIFO Register for Endpoint 0
424h	FIFO1	Transmit and Receive FIFO Register for Endpoint 1
428h	FIFO2	Transmit and Receive FIFO Register for Endpoint 2
42Ch	FIFO3	Transmit and Receive FIFO Register for Endpoint 3
430h	FIFO4	Transmit and Receive FIFO Register for Endpoint 4
OTG Device Control		
460h	DEVCTL	OTG Device Control Register
Dynamic FIFO Control		
462h	TXFIFOSZ	Transmit Endpoint FIFO Size (Index register set to select Endpoints 1-4)
463h	RXFIFOSZ	Receive Endpoint FIFO Size (Index register set to select Endpoints 1-4)
464h	TXFIFOADDR	Transmit Endpoint FIFO Address (Index register set to select Endpoints 1-4)
466h	RXFIFOADDR	Receive Endpoint FIFO Address (Index register set to select Endpoints 1-4)
Target Endpoint 0 Control Registers, Valid Only in Host Mode		
480h	TXFUNCADDR	Address of the target function that has to be accessed through the associated Transmit Endpoint.
482h	TXHUBADDR	Address of the hub that has to be accessed through the associated Transmit Endpoint. This is used only when full speed or low speed device is connected via a USB2.0 high-speed hub.
483h	TXHUBPORT	Port of the hub that has to be accessed through the associated Transmit Endpoint. This is used only when full speed or low speed device is connected via a USB2.0 high-speed hub.
484h	RXFUNCADDR	Address of the target function that has to be accessed through the associated Receive Endpoint.

Copyright © 2009–2011, Texas Instruments Incorporated

Table 6-56. Universal Serial Bus (USB) Registers (continued)

Offset	Acronym	Register Description
486h	RXHUBADDR	Address of the hub that has to be accessed through the associated Receive Endpoint. This is used only when full speed or low speed device is connected via a USB2.0 high-speed hub.
487h	RXHUBPORT	Port of the hub that has to be accessed through the associated Receive Endpoint. This is used only when full speed or low speed device is connected via a USB2.0 high-speed hub.
Target Endpoint 1 Control Registers, Valid Only in Host Mode		
488h	TXFUNCADDR	Address of the target function that has to be accessed through the associated Transmit Endpoint.
48Ah	TXHUBADDR	Address of the hub that has to be accessed through the associated Transmit Endpoint. This is used only when full speed or low speed device is connected via a USB2.0 high-speed hub.
48Bh	TXHUBPORT	Port of the hub that has to be accessed through the associated Transmit Endpoint. This is used only when full speed or low speed device is connected via a USB2.0 high-speed hub.
48Ch	RXFUNCADDR	Address of the target function that has to be accessed through the associated Receive Endpoint.
48Eh	RXHUBADDR	Address of the hub that has to be accessed through the associated Receive Endpoint. This is used only when full speed or low speed device is connected via a USB2.0 high-speed hub.
48Fh	RXHUBPORT	Port of the hub that has to be accessed through the associated Receive Endpoint. This is used only when full speed or low speed device is connected via a USB2.0 high-speed hub.
Target Endpoint 2 Control Registers, Valid Only in Host Mode		
490h	TXFUNCADDR	Address of the target function that has to be accessed through the associated Transmit Endpoint.
492h	TXHUBADDR	Address of the hub that has to be accessed through the associated Transmit Endpoint. This is used only when full speed or low speed device is connected via a USB2.0 high-speed hub.
493h	TXHUBPORT	Port of the hub that has to be accessed through the associated Transmit Endpoint. This is used only when full speed or low speed device is connected via a USB2.0 high-speed hub.
494h	RXFUNCADDR	Address of the target function that has to be accessed through the associated Receive Endpoint.
496h	RXHUBADDR	Address of the hub that has to be accessed through the associated Receive Endpoint. This is used only when full speed or low speed device is connected via a USB2.0 high-speed hub.
497h	RXHUBPORT	Port of the hub that has to be accessed through the associated Receive Endpoint. This is used only when full speed or low speed device is connected via a USB2.0 high-speed hub.
Target Endpoint 3 Control Registers, Valid Only in Host Mode		
498h	TXFUNCADDR	Address of the target function that has to be accessed through the associated Transmit Endpoint.
49Ah	TXHUBADDR	Address of the hub that has to be accessed through the associated Transmit Endpoint. This is used only when full speed or low speed device is connected via a USB2.0 high-speed hub.
49Bh	TXHUBPORT	Port of the hub that has to be accessed through the associated Transmit Endpoint. This is used only when full speed or low speed device is connected via a USB2.0 high-speed hub.
49Ch	RXFUNCADDR	Address of the target function that has to be accessed through the associated Receive Endpoint.
49Eh	RXHUBADDR	Address of the hub that has to be accessed through the associated Receive Endpoint. This is used only when full speed or low speed device is connected via a USB2.0 high-speed hub.
49Fh	RXHUBPORT	Port of the hub that has to be accessed through the associated Receive Endpoint. This is used only when full speed or low speed device is connected via a USB2.0 high-speed hub.
Target Endpoint 4 Control Registers, Valid Only in Host Mode		

Copyright © 2009–2011, Texas Instruments Incorporated

Table 6-56. Universal Serial Bus (USB) Registers (continued)

Offset	Acronym	Register Description
4A0h	TXFUNCADDR	Address of the target function that has to be accessed through the associated Transmit Endpoint.
4A2h	TXHUBADDR	Address of the hub that has to be accessed through the associated Transmit Endpoint. This is used only when full speed or low speed device is connected via a USB2.0 high-speed hub.
4A3h	TXHUBPORT	Port of the hub that has to be accessed through the associated Transmit Endpoint. This is used only when full speed or low speed device is connected via a USB2.0 high-speed hub.
4A4h	RXFUNCADDR	Address of the target function that has to be accessed through the associated Receive Endpoint.
4A6h	RXHUBADDR	Address of the hub that has to be accessed through the associated Receive Endpoint. This is used only when full speed or low speed device is connected via a USB2.0 high-speed hub.
4A7h	RXHUBPORT	Port of the hub that has to be accessed through the associated Receive Endpoint. This is used only when full speed or low speed device is connected via a USB2.0 high-speed hub.
Control and Status Register for Endpoint 0		
502h	PERI_CSR0	Control Status Register for Endpoint 0 in Peripheral Mode
	HOST_CSR0	Control Status Register for Endpoint 0 in Host Mode
508h	COUNT0	Number of Received Bytes in Endpoint 0 FIFO
50Ah	HOST_TYPE0	Defines the Speed of Endpoint 0
50Bh	HOST_NAKLIMIT0	Sets the NAK Response Timeout on Endpoint 0
50Fh	CONFIGDATA	Returns details of core configuration.
Control and Status Register for Endpoint 1		
510h	TXMAXP	Maximum Packet Size for Peripheral/Host Transmit Endpoint
512h	PERI_TXCSR	Control Status Register for Peripheral Transmit Endpoint (peripheral mode)
	HOST_TXCSR	Control Status Register for Host Transmit Endpoint (host mode)
514h	RXMAXP	Maximum Packet Size for Peripheral/Host Receive Endpoint
516h	PERI_RXCSR	Control Status Register for Peripheral Receive Endpoint (peripheral mode)
	HOST_RXCSR	Control Status Register for Host Receive Endpoint (host mode)
518h	RXCOUNT	Number of Bytes in Host Receive endpoint FIFO
51Ah	HOST_TXTYPE	Sets the operating speed, transaction protocol and peripheral endpoint number for the host Transmit endpoint.
51Bh	HOST_TXINTERVAL	Sets the polling interval for Interrupt/ISOC transactions or the NAK response timeout on Bulk transactions for host Transmit endpoint.
51Ch	HOST_RXTYPE	Sets the operating speed, transaction protocol and peripheral endpoint number for the host Receive endpoint.
51Dh	HOST_RXINTERVAL	Sets the polling interval for Interrupt/ISOC transactions or the NAK response timeout on Bulk transactions for host Receive endpoint.
Control and Status Register for Endpoint 2		
520h	TXMAXP	Maximum Packet Size for Peripheral/Host Transmit Endpoint
522h	PERI_TXCSR	Control Status Register for Peripheral Transmit Endpoint (peripheral mode)
	HOST_TXCSR	Control Status Register for Host Transmit Endpoint (host mode)
524h	RXMAXP	Maximum Packet Size for Peripheral/Host Receive Endpoint
526h	PERI_RXCSR	Control Status Register for Peripheral Receive Endpoint (peripheral mode)
	HOST_RXCSR	Control Status Register for Host Receive Endpoint (host mode)

Copyright © 2009–2011, Texas Instruments Incorporated

Table 6-56. Universal Serial Bus (USB) Registers (continued)

Offset	Acronym	Register Description
528h	RXCOUNT	Number of Bytes in Host Receive endpoint FIFO
52Ah	HOST_TXTYPE	Sets the operating speed, transaction protocol and peripheral endpoint number for the host Transmit endpoint.
52Bh	HOST_TXINTERVAL	Sets the polling interval for Interrupt/ISOC transactions or the NAK response timeout on Bulk transactions for host Transmit endpoint.
52Ch	HOST_RXTYPE	Sets the operating speed, transaction protocol and peripheral endpoint number for the host Receive endpoint.
52Dh	HOST_RXINTERVAL	Sets the polling interval for Interrupt/ISOC transactions or the NAK response timeout on Bulk transactions for host Receive endpoint.
Control and Status Register for Endpoint 3		
530h	TXMAXP	Maximum Packet Size for Peripheral/Host Transmit Endpoint
532h	PERI_TXCSR	Control Status Register for Peripheral Transmit Endpoint (peripheral mode)
	HOST_TXCSR	Control Status Register for Host Transmit Endpoint (host mode)
534h	RXMAXP	Maximum Packet Size for Peripheral/Host Receive Endpoint
536h	PERI_RXCSR	Control Status Register for Peripheral Receive Endpoint (peripheral mode)
	HOST_RXCSR	Control Status Register for Host Receive Endpoint (host mode)
538h	RXCOUNT	Number of Bytes in Host Receive endpoint FIFO
53Ah	HOST_TXTYPE	Sets the operating speed, transaction protocol and peripheral endpoint number for the host Transmit endpoint.
53Bh	HOST_TXINTERVAL	Sets the polling interval for Interrupt/ISOC transactions or the NAK response timeout on Bulk transactions for host Transmit endpoint.
53Ch	HOST_RXTYPE	Sets the operating speed, transaction protocol and peripheral endpoint number for the host Receive endpoint.
53Dh	HOST_RXINTERVAL	Sets the polling interval for Interrupt/ISOC transactions or the NAK response timeout on Bulk transactions for host Receive endpoint.
Control and Status Register for Endpoint 4		
540h	TXMAXP	Maximum Packet Size for Peripheral/Host Transmit Endpoint
542h	PERI_TXCSR	Control Status Register for Peripheral Transmit Endpoint (peripheral mode)
	HOST_TXCSR	Control Status Register for Host Transmit Endpoint (host mode)
544h	RXMAXP	Maximum Packet Size for Peripheral/Host Receive Endpoint
546h	PERI_RXCSR	Control Status Register for Peripheral Receive Endpoint (peripheral mode)
	HOST_RXCSR	Control Status Register for Host Receive Endpoint (host mode)
548h	RXCOUNT	Number of Bytes in Host Receive endpoint FIFO
54Ah	HOST_TXTYPE	Sets the operating speed, transaction protocol and peripheral endpoint number for the host Transmit endpoint.
54Bh	HOST_TXINTERVAL	Sets the polling interval for Interrupt/ISOC transactions or the NAK response timeout on Bulk transactions for host Transmit endpoint.
54Ch	HOST_RXTYPE	Sets the operating speed, transaction protocol and peripheral endpoint number for the host Receive endpoint.
54Dh	HOST_RXINTERVAL	Sets the polling interval for Interrupt/ISOC transactions or the NAK response timeout on Bulk transactions for host Receive endpoint.

Copyright © 2009–2011, Texas Instruments Incorporated

6.13.2 USB2.0 Electrical Data/Timing

Table 6-57. Switching Characteristics Over Recommended Operating Conditions for USB2.0 (see Figure 6-41)

NO.	PARAMETER		DEVICE						UNIT
			LOW SPEED 1.5 Mbps		FULL SPEED 12 Mbps		HIGH SPEED(1) 480 Mbps		
			MIN	MAX	MIN	MAX	MIN	MAX	
1	$t_{r(D)}$	Rise time, USB_DP and USB_DM signals(2)	75	300	4	20	0.5	20	ns
2	$t_{f(D)}$	Fall time, USB_DP and USB_DM signals(2)	75	300	4	20	0.5	20	ns
3	t_{frfm}	Rise/Fall time, matching(3)	80	125	90	111.11	-	-	%
4	V_{CRS}	Output signal cross-over voltage(2)	1.3	2	1.3	2	-	-	V
5	$t_{jr(source)NT}$	Source (Host) Driver jitter, next transition		2		2			ns
	$t_{jr(FUNC)NT}$	Function Driver jitter, next transition		25		2			ns
6	$t_{jr(source)PT}$	Source (Host) Driver jitter, paired transition(4)		1		1			ns
	$t_{jr(FUNC)PT}$	Function Driver jitter, paired transition		10		1			ns
7	$t_{w(EOPT)}$	Pulse duration, EOP transmitter	1250	1500	160	175	-	-	ns
8	$t_{w(EOPR)}$	Pulse duration, EOP receiver	670		82		-		ns
9	$t_{(DRATE)}$	Data Rate		1.5		12		480	Mb/s
10	Z_{DRV}	Driver Output Resistance	-	-	28	49.5	40.5	49.5	Ω

(1) For more detailed specification information, see the Universal Serial Bus Specification Revision 2.0, Chapter 7.
(2) Low Speed: C_L = 200 pF, Full Speed: C_L = 50 pF, High Speed: C_L = 50 pF
(3) $t_{frfm} = (t_r/t_f) \times 100$. [Excluding the first transaction from the Idle state.]
(4) $t_{jr} = t_{px(1)} - t_{px(0)}$

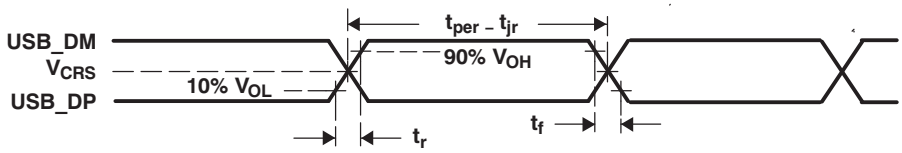

Figure 6-41. USB2.0 Integrated Transceiver Interface Timing

Copyright © 2009–2011, Texas Instruments Incorporated

6.14 Universal Asynchronous Receiver/Transmitter (UART)

The UART module performs serial-to-parallel conversion on data received from a peripheral device or modem, and parallel-to-serial conversion on data received from the CPU. Each UART also includes a programmable baud rate generator capable of dividing the module's reference clock by divisors from 1 to 65,535 to produce a 16 x clock driving the internal logic. The UART modules support the following features:

- Frequency pre-scale values from 1 to 65,535 to generate appropriate baud rates
- 16-byte storage space for both the transmitter and receiver FIFOs
- Unique interrupts, one for each UART
- Unique EDMA events, both received and transmitted data for each UART
- 1, 4, 8, or 14 byte selectable receiver FIFO trigger level for autoflow control and DMA
- Programmable auto-rts and auto-cts for autoflow control (supported on UART1)
- Programmable serial data formats
  - 5, 6, 7, or 8-bit characters
  - Even, odd, or no parity bit generation and detection
  - 1, 1.5, or 2 stop bit generation
- False start bit detection
- Line break generation and detection
- Internal diagnostic capabilities
  - Loopback controls for communications link fault isolation
  - Break, parity, overrun, and framing error simulation
- Modem control functions: CTS, RTS (supported on UART1)

6.14.1 UART Peripheral Register Description(s)

Table 6-58 lists the UART registers, their corresponding acronyms, and the device memory locations (offsets).

Table 6-58. UART Registers

OFFSET	ACRONYM	REGISTER DESCRIPTION
0h	RBR	Receiver Buffer Register (read only)
0h	THR	Transmitter Holding Register (write only)
4h	IER	Interrupt Enable Register
8h	IIR	Interrupt Identification Register (read only)
8h	FCR	FIFO Control Register (write only)
Ch	LCR	Line Control Register
10h	MCR	Modem Control Register
14h	LSR	Line Status Register
20h	DLL	Divisor LSB Latch
24h	DLH	Divisor MSB Latch
28h	PID	Peripheral Identification Register
30h	PWREMU_MGMT	Power and Emulation Management Register
34h	MDR	Mode Definition Register

6.14.2 UART Electrical Data/Timing

Table 6-59. Timing Requirements for UARTx Receive (see Figure 6-42)(1)

NO.			DEVICE		UNIT
			MIN	MAX	
4	$t_{w(URXDB)}$	Pulse duration, receive data bit (RXDn)	.96U	1.05U	ns
5	$t_{w(URXSB)}$	Pulse duration, receive start bit	.96U	1.05U	ns

(1) U = UART baud time = 1/programmed baud rate.

Table 6-60. Switching Characteristics Over Recommended Operating Conditions for UARTx Transmit (see Figure 6-42)(1)

NO.	PARAMETER		DEVICE		UNIT
			MIN	MAX	
1	$f_{(baud)}$	UART0 Maximum programmable baud rate		5	MHz
		UART1 Maximum programmable baud rate		5	
2	$t_{w(UTXDB)}$	Pulse duration, transmit data bit (TXDn)	U - 2	U + 2	ns
3	$t_{w(UTXSB)}$	Pulse duration, transmit start bit	U - 2	U + 2	ns

(1) U = UART baud time = 1/programmed baud rate.

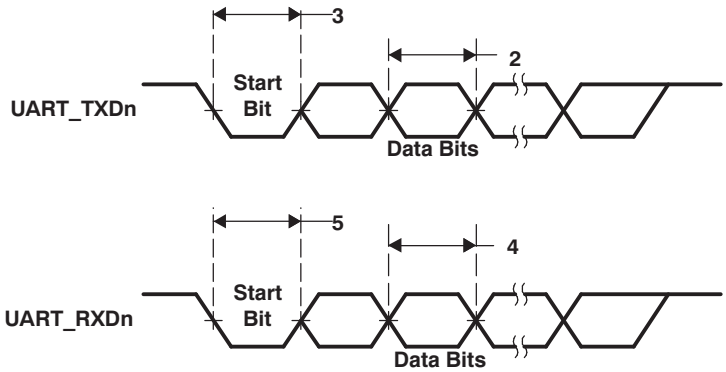

Figure 6-42. UART Transmit/Receive Timing

Copyright © 2009–2011, Texas Instruments Incorporated

6.15 Serial Port Interface (SPI)

The SPI module provides a programmable length shift register which allows serial communication with other SPI devices through a 3 or 4 wire interface (Clock, Data In, Data Out, and Chip-select). The SPI supports the following features:

- Master and Slave mode operation is supported on all SPI ports (master mode means that the device provides the serial clock)
- 2 chip selects for interfacing to multiple slave SPI devices.
- 3 or 4 wire interface (Clock, Data In, Data Out, and Enable)
- Unique interrupt for each SPI port (except SPI4)
- Separate EDMA events for SPI Receive and Transmit for each SPI port (except SPI4)
- 16-bit shift register
- Receive buffer register
- Programmable character length (2 to 16 bits)
- Programmable SPI clock frequency range
- 8-bit clock prescaler
- Programmable clock phase (delay or no delay)
- Programmable clock polarity

Note: SPI4 slave mode does not support Chip-select input, only supports 3-wire interface.

The SPI modules do not support the following features:

- GPIO mode. GPIO functionality is supported by the GIO modules for those SPI pins that are multiplexed with GPIO signals.

6.15.1 SPI Peripheral Register Description(s)

Table 6-61 lists the SPI registers, their corresponding acronyms, and the device memory locations (offsets). These offsets apply to all device SPI modules.

Table 6-61. SPI Registers

OFFSET	ACRONYM	REGISTER DESCRIPTION
00h	SPIGCR0	SPI global control register 0
04h	SPIGCR1	SPI global control register 1
08h	SPIINT	SPI interrupt register
0Ch	SPILVL	SPI interrupt level register
10h	SPIFLG	SPI flag register
14h	SPIPC0	SPI pin control register
18h	-	Reserved
1Ch	SPIPC2	SPI pin control register 2
20h - 38h	-	Reserved
3Ch	SPIDAT1	SPI shift register
40h	SPIBUF	SPI buffer register
44h	SPIEMU	SPI emulation register
48h	SPIDELAY	SPI delay register
4Ch	SPIDEF	SPI default chip select register
50h-5Ch	SPIFMT0	SPI data format register 0
60h	INTVECT0	SPI interrupt vector register 0
64h	INTVECT1	SPI interrupt vector register 1

6.15.2 SPI Electrical Data/Timing

Master Mode — General

Table 6-62. General Switching Characteristics in Master Mode(1)

NO.	PARAMETER		MIN	MAX	UNIT
1	$t_{c(CLK)}$	Cycle time, SPI_SCLK	greater of 2P or 25	256P	ns
2	$t_{w(CLKH)}$	Pulse width, SPI_SCLK high	$.5(t_{c(CLK)})$ - 1.25		ns
3	$t_{w(CLKL)}$	Pulse width, SPI_SCLK low	$.5(t_{c(CLK)})$ - 1.25		ns
4	$t_{osu(SIMO-CLK)}$	Output setup time, SPI_SIMO valid (1st bit) before initial SPI_SCLK rising edge, 3-/4-pin mode, polarity = 0, phase = 0	6.5		ns
		Output setup time, SPI_SIMO valid (1st bit) before initial SPI_SCLK rising edge, 3-/4-pin mode, polarity = 0, phase = 1	$.5t_{c(CLK)}$ + 6.5		
		Output setup time, SPI_SIMO valid (1st bit) before initial SPI_SCLK falling edge, 3-/4-pin mode, polarity = 1, phase = 0	6.5		
		Output setup time, SPI_SIMO valid (1st bit) before initial SPI_SCLK falling edge, 3-/4-pin mode, polarity = 1, phase = 1	$.5t_{c(CLK)}$ + 6.5		
5	$t_{d(CLK-SIMO)}$	Delay time, SPI_SCLK transmit rising edge to SPI_SIMO output valid (subsequent bit driven), 3-/4-pin mode, polarity = 0, phase = 0	-3	6	ns
		Delay time, SPI_SCLK transmit falling edge to SPI_SIMO output valid (subsequent bit driven), 3-/4-pin mode, polarity = 0, phase = 1	-3	6	
		Delay time, SPI_SCLK transmit falling edge to SPI_SIMO output valid (subsequent bit driven), 3-/4-pin mode, polarity = 1, phase = 0	-3	6	
		Delay time, SPI_SCLK transmit rising edge to SPI_SIMO output valid (subsequent bit driven), 3-/4-pin mode, polarity = 1, phase = 1	-3	6	
6	$t_{oh(CLK-SIMO)}$	Output hold time, SPI_SIMO valid (except final bit) after receive falling edge of SPI_SCLK, 3-/4-pin mode, polarity = 0, phase = 0	9.5		ns
		Output hold time, SPI_SIMO valid (except final bit) after receive rising edge of SPI_SCLK, 3-/4-pin mode, polarity = 0, phase = 1	9.5		
		Output hold time, SPI_SIMO valid (except final bit) after receive rising edge of SPI_SCLK, 3-/4-pin mode, polarity = 1, phase = 0	9.5		
		Output hold time, SPI_SIMO valid (except final bit) after receive falling edge of SPI_SCLK, 3-/4-pin mode, polarity = 1, phase = 1	9.5		

(1) T = period of SPI_SCLK; For SPI0, SPI1, SPI2, and SPI3, P = period of SPI core clock (PLL1SYSCLK4). For SPI4, P = period of SPI core clock (OSCIN).

 Copyright © 2009–2011, Texas Instruments Incorporated

Table 6-63. General Input Timing Requirements in Master Mode

NO.			MIN	MAX	UNIT
7	$t_{su(SOMI-CLK)}$	Setup time, SPI_SOMI valid before receive falling edge of SPI_SCLK, 3-/4-pin mode, polarity = 0, phase = 0	4		ns
		Setup time, SPI_SOMI valid before receive rising edge of SPI_SCLK, 3-/4-pin mode, polarity = 0, phase = 1	4		
		Setup time, SPI_SOMI valid before receive rising edge of SPI_SCLK, 3-/4-pin mode, polarity = 1, phase = 0	4		
		Setup time, SPI_SOMI valid before receive falling edge of SPI_SCLK, 3-/4-pin mode, polarity = 1, phase = 1	4		
8	$t_{h(CLK-SOMI)}$	Hold time, SPI_SOMI valid after receive falling edge of SPI_SCLK, 3-/4-pin mode, polarity = 0, phase = 0	4		ns
		Hold time, SPI_SOMI valid after receive rising edge of SPI_SCLK, 3-/4-pin mode, polarity = 0, phase = 1	4		
		Hold time, SPI_SOMI valid after receive rising edge of SPI_SCLK, 3-/4-pin mode, polarity = 1, phase = 0	4		
		Hold time, SPI_SOMI valid after receive falling edge of SPI_SCLK, 3-/4-pin mode, polarity = 1, phase = 1	4		

Slave Mode — General

Table 6-64. General Switching Characteristics in Slave Mode (For 3-/4-Pin Modes)(1)

NO.	PARAMETER		MIN	MAX	UNIT
13	$t_{d(CLK-SOMI)}$	Delay time, transmit rising edge of SPI_SCLK to SPI_SOMI output valid, 3-/4-pin mode, polarity = 0, phase = 0	2	16.5	ns
		Delay time, transmit falling edge of SPI_SCLK to SPI_SOMI output valid, 3-/4-pin mode, polarity = 0, phase = 1	2	16.5	
		Delay time, transmit falling edge of SPI_SCLK to SPI_SOMI output valid, 3-/4-pin mode, polarity = 1, phase = 0	2	16.5	
		Delay time, transmit rising edge of SPI_SCLK to SPI_SOMI output valid, 3-/4-pin mode, polarity = 1, phase = 1	2	16.5	
14	$t_{oh(CLK-SOMI)}$	Output hold time, SPI_SOMI valid (except final bit) after receive falling edge of SPI_SCLK, 3-/4-pin mode, polarity = 0, phase = 0	4		ns
		Output hold time, SPI_SOMI valid (except final bit) after receive rising edge of SPI_SCLK, 3-/4-pin mode, polarity = 0, phase = 1	4		
		Output hold time, SPI_SOMI valid (except final bit) after receive rising edge of SPI_SCLK, 3-/4-pin mode, polarity = 1, phase = 0	4		
		Output hold time, SPI_SOMI valid (except final bit) after receive falling edge of SPI_SCLK, 3-/4-pin mode, polarity = 1, phase = 1	4		

(1) T = period of SPI_SCLK

Copyright © 2009–2011, Texas Instruments Incorporated

Table 6-65. General Input Timing Requirements in Slave Mode[1]

NO.			MIN	MAX	UNIT
9	$t_{c(CLK)}$	Cycle time, SPI_SCLK	greater of 2P or 25	256P	ns
10	$t_{w(CLKH)}$	Pulse width, SPI_SCLK high	$.5(t_{c(CLK)})$ - 1.25		ns
11	$t_{w(CLKL)}$	Pulse width, SPI_SCLK low	$.5(t_{c(CLK)})$ - 1.25		ns
15	$t_{su(SIMO-CLK)}$	Setup time, SPI_SIMO data valid before receive falling edge of SPI_SCLK, 3-/4-pin mode, polarity = 0, phase = 0	4		ns
		Setup time, SPI_SIMO data valid before receive rising edge of SPI_SCLK, 3-/4-pin mode, polarity = 0, phase = 1	4		
		Setup time, SPI_SIMO data valid before receive rising edge of SPI_SCLK, 3-/4-pin mode, polarity = 1, phase = 0	4		
		Setup time, SPI_SIMO data valid before receive falling edge of SPI_SCLK, 3-/4-pin mode, polarity = 1, phase = 1	4		
16	$t_{h(CLK-SIMO)}$	Hold time, SPI_SIMO data valid after receive falling edge of SPI_SCLK, 3-/4-pin mode, polarity = 0, phase = 0	4		ns
		Hold time, SPI_SIMO data valid after receive rising edge of SPI_SCLK, 3-/4-pin mode, polarity = 0, phase = 1	4		
		Hold time, SPI_SIMO data valid after receive rising edge of SPI_SCLK, 3-/4-pin mode, polarity = 1, phase = 0	4		
		Hold time, SPI_SIMO data valid after receive falling edge of SPI_SCLK, 3-/4-pin mode, polarity = 1, phase = 1	4		

(1) T = period of SPI_SCLK; For SPI0, SPI1, SPI2, and SPI3, P = period of SPI core clock (PLL1SYSCLK4). For SPI4, P = period of SPI core clock (OSCIN).

Master Mode — Additional

Table 6-66. Additional Output Switching Characteristics of 4-Pin Chip-Select Option in Master Mode

NO.	PARAMETER		MIN	MAX	UNIT
19	$t_{osu(CS-CLK)}$ (1)	Output setup time, $\overline{SPI_SCS[n]}$ active before first SPI_SCLK rising edge, polarity = 0, phase = 0, SPIDELAY.C2TDELAY = 0	(C2TDELAY+2)*P+6.5		ns
		Output setup time, $\overline{SPI_SCS[n]}$ active before first SPI_SCLK rising edge, polarity = 0, phase = 1, SPIDELAY.C2TDELAY = 0	(C2TDELAY+2)*P + .5tc + 6.5		
		Output setup time, $\overline{SPI_SCS[n]}$ active before first SPI_SCLK falling edge, polarity = 1, phase = 0, SPIDELAY.C2TDELAY = 0	(C2TDELAY+2)*P + 6.5		
		Output setup time, $\overline{SPI_SCS[n]}$ active before first SPI_SCLK falling edge, polarity = 1, phase = 1, SPIDELAY.C2TDELAY = 0	(C2TDELAY+2)*P + .5tc + 6.5		
20	$t_{d(CLK-CS)}$	Delay time, final SPI_SCLK falling edge to master deasserting $\overline{SPI_SCS[n]}$, polarity = 0, phase = 0, SPIDELAY.T2CDELAY = 0, SPIDAT1.CSHOLD not enabled	(T2CDELAY+1)*P - 3		ns
		Delay time, final SPI_SCLK falling edge to master deasserting $\overline{SPI_SCS[n]}$, polarity = 0, phase = 1, SPIDELAY.T2CDELAY = 0, SPIDAT1.CSHOLD not enabled	(T2CDELAY+1)*P - 3		
		Delay time, final SPI_SCLK rising edge to master deasserting $\overline{SPI_SCS[n]}$, polarity = 1, phase = 0, SPIDELAY.T2CDELAY = 0, SPIDAT1.CSHOLD not enabled	(T2CDELAY+1)*P - 3		
		Delay time, final SPI_SCLK rising edge to master deasserting $\overline{SPI_SCS[n]}$, polarity = 1, phase = 1, SPIDELAY.T2CDELAY = 0, SPIDAT1.CSHOLD not enabled	(T2CDELAY+1)*P - 3		

(1) The Master SPI is ready with new data before $\overline{SPI_SCS[n]}$ assertion.

Slave Mode — Additional

Table 6-67. Additional Output Switching Characteristics of 4-Pin Chip-Select Option in Slave Mode(1)

NO.	PARAMETER		MIN	MAX	UNIT
27	$t_{d(CSL-SOMI)}$	Delay time, master asserting $\overline{SPI_SCS[n]}$ to slave driving SPI_SOMI data valid		2P + 16.5	ns
28	$t_{dis(CSH-SOMI)}$	Disable time, master deasserting $\overline{SPI_SCS[n]}$ to slave driving SPI_SOMI high impedance		2P + 16.5	ns

(1) T = period of SPI_SCLK; For SPI0, SPI1, SPI2, and SPI3, P = period of SPI core clock (PLL1SYSCLK4). For SPI4, P = period of SPI core clock (OSCIN).

 Copyright © 2009–2011, Texas Instruments Incorporated

Table 6-68. Additional Input Timing Requirements of 4-Pin Chip-Select Option in Slave Mode(1)

NO.			MIN	MAX	UNIT
25	$t_{su(CSL-CLK)}$	Setup time, $\overline{SPI_SCS[n]}$ asserted at slave to first SPI_SCLK edge (rising or falling) at slave	2P + 25		ns
26	$t_{d(CLK-CSH)}$	Delay time, final falling edge SPI_SCLK to $\overline{SPI_SCS[n]}$ deasserted, polarity = 0, phase = 0	$.5(t_{c(CLK)})$ + 2P - 4		ns
		Delay time, final falling edge SPI_SCLK to $\overline{SPI_SCS[n]}$ deasserted, polarity = 0, phase = 1	2P - 4		
		Delay time, final rising edge SPI_SCLK to $\overline{SPI_SCS[n]}$ deasserted, polarity = 1, phase = 0	$.5(t_{c(CLK)})$ + 2P - 4		
		Delay time, final rising edge SPI_SCLK to $\overline{SPI_SCS[n]}$ deasserted, polarity = 1, phase = 1	2P - 4		

(1) T = period of SPI_SCLK; For SPI0, SPI1, SPI2, and SPI3, P = period of SPI core clock (PLL1SYSCLK4). For SPI4, P = period of SPI core clock (OSCIN).

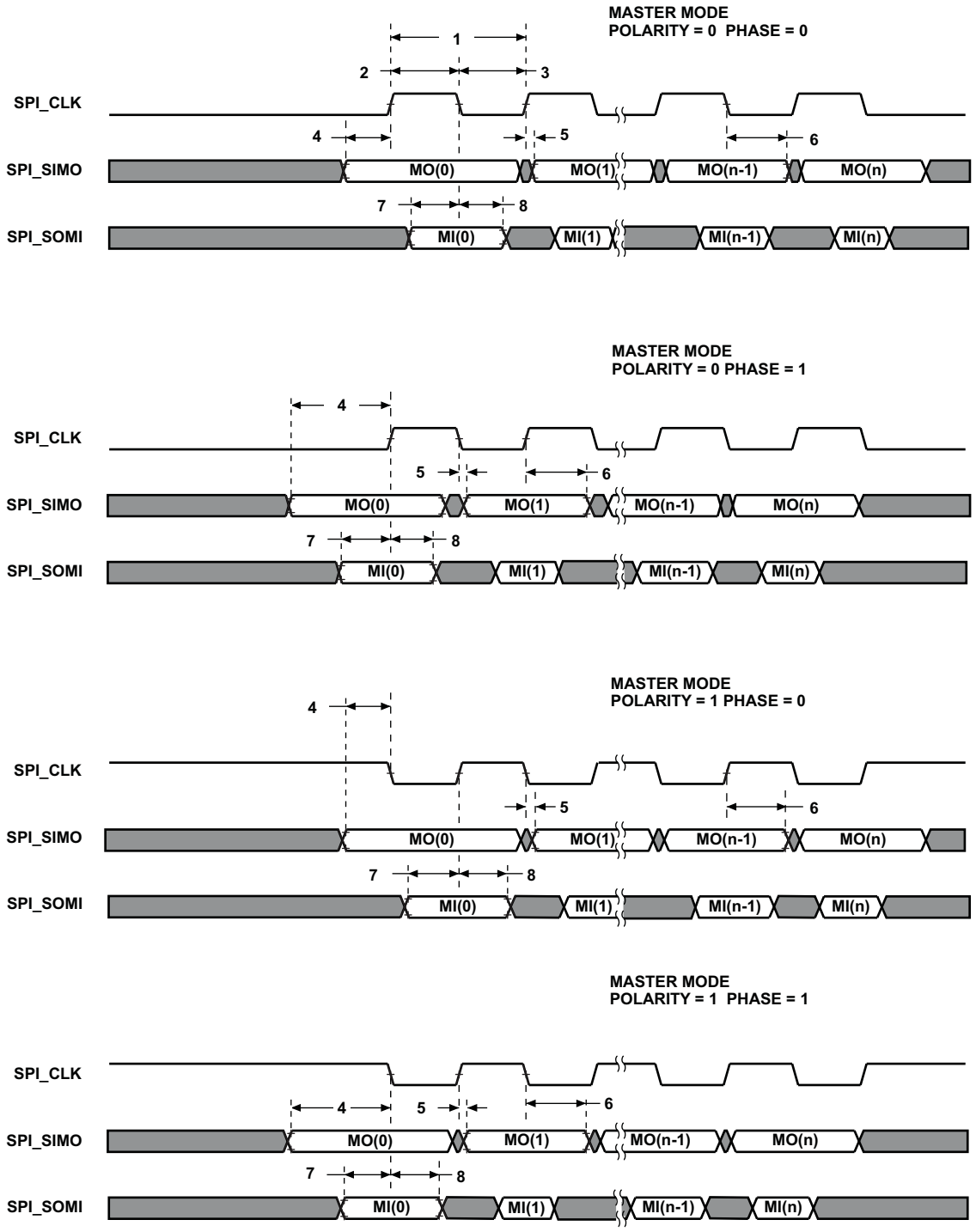

Figure 6-43. SPI Timings—Master Mode

Copyright © 2009–2011, Texas Instruments Incorporated

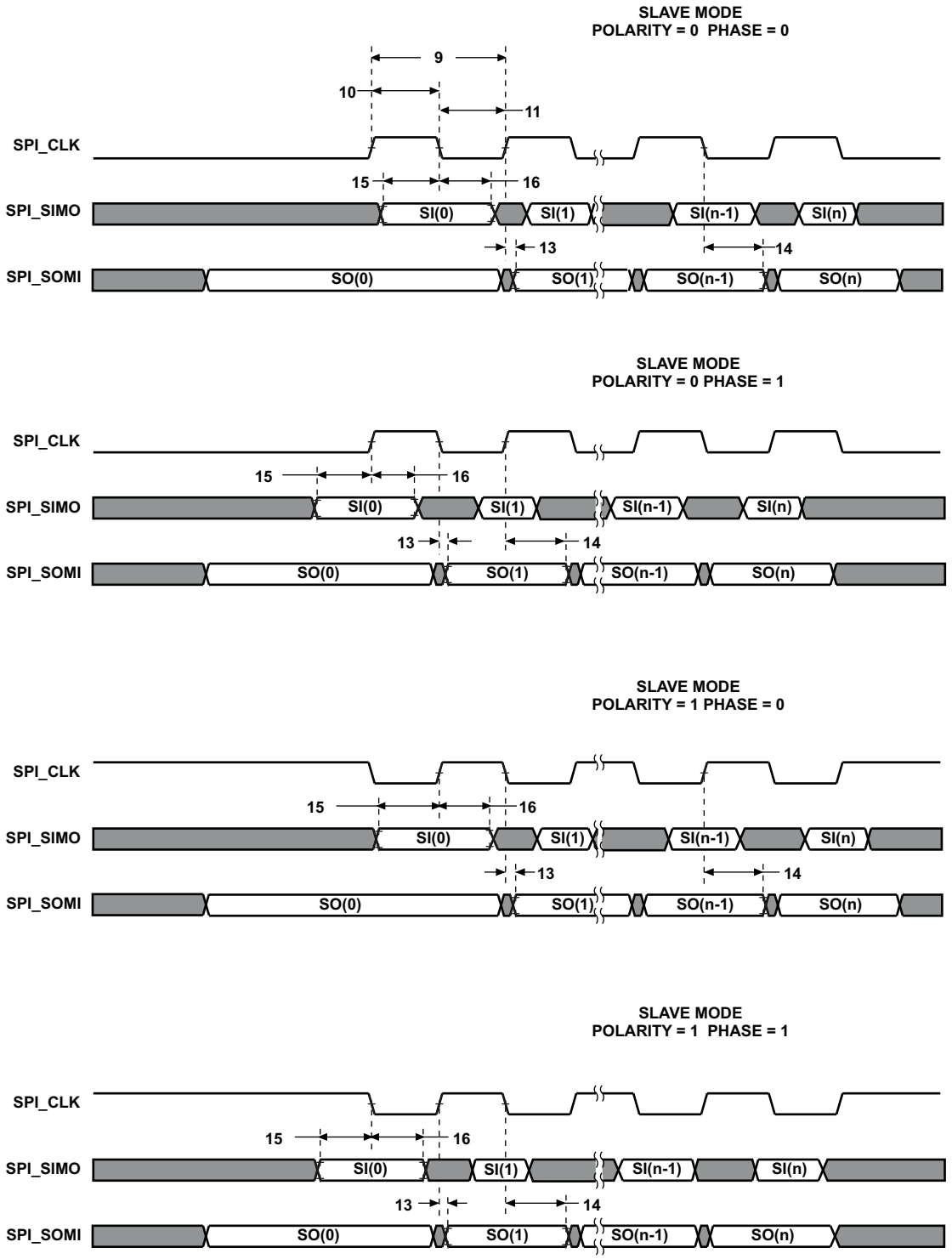

A. The first bit of transmit data becomes valid on the SPI_SOMI pin when software writes to the SPIDAT1 register. For more details, see the *TMS320DM36x DMSoC Serial Peripheral Interface User's Guide* (literature number SPRUFH1).

Figure 6-44. SPI Timings—Slave Mode

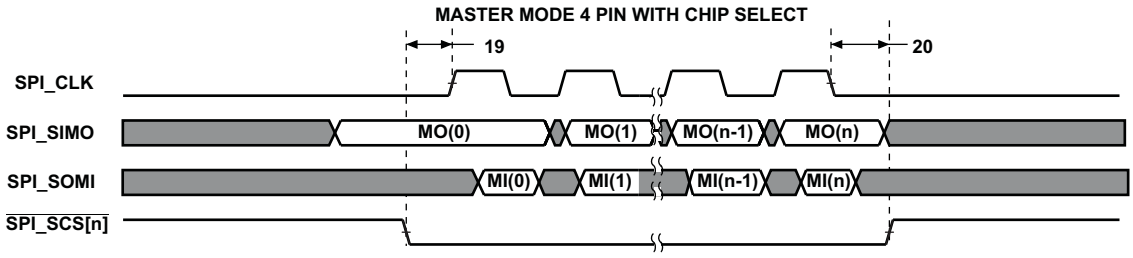

Figure 6-45. SPI Timings—Master Mode (4-Pin)

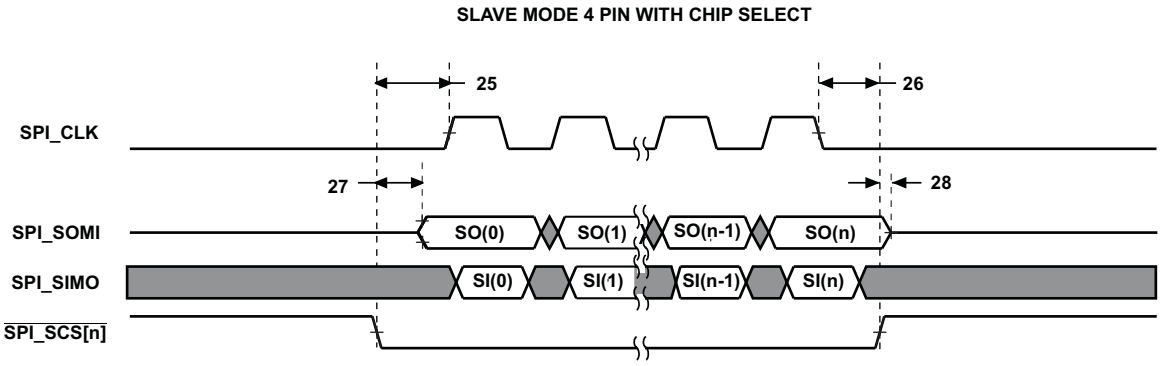

Figure 6-46. SPI Timings—Slave Mode (4-Pin)

Copyright © 2009–2011, Texas Instruments Incorporated

6.16 Inter-Integrated Circuit (I2C)

The inter-integrated circuit (I2C) module provides an interface between the DM365 and other devices compliant with Philips Semiconductors Inter-IC bus (I^2C-bus) specification version 2.1 and connected by way of an I^2C-bus. External components attached to this 2-wire serial bus can transmit/receive up to 8-bit data to/from the device through the I2C module.

The I2C port supports:

- Compatible with Philips I2C Specification Revision 2.1 (January 2000)
- Fast Mode up to 400 Kbps (no fail-safe I/O buffers)
- Noise Filter to Remove Noise 50 ns or less
- Seven- and Ten-Bit Device Addressing Modes
- Master (Transmit/Receive) and Slave (Transmit/Receive) Functionality
- Events: DMA, Interrupt, or Polling

For more detailed information on the I2C peripheral, see the *Documentation Support* section for the device Inter-Integrated Circuit (I2C) Module Reference Guide.

6.16.1 I2C Peripheral Register Description(s)

Table 6-69 lists the I2C registers, their corresponding acronyms, and the device memory locations (offsets).

Table 6-69. Inter-Integrated Circuit (I2C) Registers

Offset	Acronym	Register Description
0h	ICOAR	I2C Own Address Register
4h	ICIMR	I2C Interrupt Mask Register
8h	ICSTR	I2C Interrupt Status Register
Ch	ICCLKL	I2C Clock Low-Time Divider Register
10h	ICCLKH	I2C Clock High-Time Divider Register
14h	ICCNT	I2C Data Count Register
18h	ICDRR	I2C Data Receive Register
1Ch	ICSAR	I2C Slave Address Register
20h	ICDXR	I2C Data Transmit Register
24h	ICMDR	I2C Mode Register
28h	ICIVR	I2C Interrupt Vector Register
2Ch	ICEMDR	I2C Extended Mode Register
30h	ICPSC	I2C Prescaler Register
34h	REVID1	I2C Revision ID Register 1
38h	REVID2	I2C Revision ID Register 2
48h	ICPFUNC	I2C Pin Function Register
4ch	ICPDIR	I2C Pin Direction Register
50h	ICPDIN	I2C Pin Data In Register
54h	ICPDOUT	I2C Pin Data Out Register
58h	ICPDSET	I2C Pin Data Set Register
5ch	ICPDCLR	I2C Pin Data Clear register

Copyright © 2009–2011, Texas Instruments Incorporated

6.16.2 I2C Electrical Data/Timing

6.16.2.1 Inter-Integrated Circuits (I2C) Timing

Table 6-70. Timing Requirements for I2C Timings(1) (see Figure 6-47)

NO.			DEVICE				UNIT
			STANDARD MODE		FAST MODE		
			MIN	MAX	MIN	MAX	
1	$t_{c(SCL)}$	Cycle time, SCL	10		2.5		µs
2	$t_{su(SCLH-SDAL)}$	Setup time, SCL high before SDA low (for a repeated START condition)	4.7		0.6		µs
3	$t_{h(SCLL-SDAL)}$	Hold time, SCL low after SDA low (for a START and a repeated START condition)	4		0.6		µs
4	$t_{w(SCLL)}$	Pulse duration, SCL low	4.7		1.3		µs
5	$t_{w(SCLH)}$	Pulse duration, SCL high	4		0.6		µs
6	$t_{su(SDAV-SCLH)}$	Setup time, SDA valid before SCL high	250		100		ns
7	$t_{h(SDA-SCLL)}$	Hold time, SDA valid after SCL low (For I²C bus™ devices)	0	3.45	0	0.9	µs
8	$t_{w(SDAH)}$	Pulse duration, SDA high between STOP and START conditions	4.7		1.3		µs
9	$t_{r(SDA)}$	Rise time, SDA		1000	$20 + 0.1C_b$ (1)	300	ns
10	$t_{r(SCL)}$	Rise time, SCL		1000	$20 + 0.1C_b$ (1)	300	ns
11	$t_{f(SDA)}$	Fall time, SDA		300	$20 + 0.1C_b$ (1)	300	ns
12	$t_{f(SCL)}$	Fall time, SCL		300	$20 + 0.1C_b$ (1)	300	ns
13	$t_{su(SCLH-SDAH)}$	Setup time, SCL high before SDA high (for STOP condition)	4		0.6		µs
14	$t_{w(SP)}$	Pulse duration, spike (must be suppressed)				50	ns
15	C_b (2)	Capacitive load for each bus line		400		400	pF

(1) The I2C pins SDA and SCL do not feature fail-safe I/O buffers. These pins could potentially draw current when the device is powered down.
(2) C_b = total capacitance of one bus line in pF. If mixed with HS-mode devices, faster fall-times are allowed.

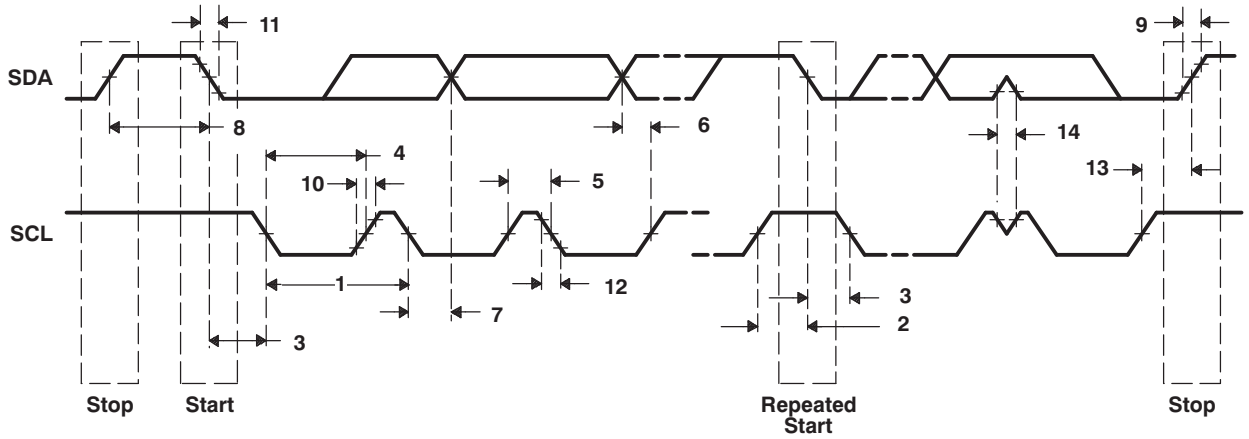

Figure 6-47. I2C Receive Timings

Copyright © 2009–2011, Texas Instruments Incorporated

Table 6-71. Switching Characteristics for I2C Timings[(1)] (see Figure 6-48)

NO.	PARAMETER		DEVICE				UNIT
			STANDARD MODE		FAST MODE		
			MIN	MAX	MIN	MAX	
16	$t_{c(SCL)}$	Cycle time, SCL	10		2.5		µs
17	$t_{d(SCLH-SDAL)}$	Delay time, SCL high to SDA low (for a repeated START condition)	4.7		0.6		µs
18	$t_{d(SDAL-SCLL)}$	Delay time, SDA low to SCL low (for a START and a repeated START condition)	4		0.6		µs
19	$t_{w(SCLL)}$	Pulse duration, SCL low	4.7		1.3		µs
20	$t_{w(SCLH)}$	Pulse duration, SCL high	4		0.6		µs
21	$t_{d(SDAV-SCLH)}$	Delay time, SDA valid to SCL high	250		100		ns
22	$t_{v(SCLL-SDAV)}$	Valid time, SDA valid after SCL low (For I2C devices)	0		0	0.9	µs
23	$t_{w(SDAH)}$	Pulse duration, SDA high between STOP and START conditions	4.7		1.3		µs
28	$t_{d(SCLH-SDAH)}$	Delay time, SCL high to SDA high (for STOP condition)	4		0.6		µs
29	C_p	Capacitance for each I2C pin		10		10	pF

(1) C_b = total capacitance of one bus line in pF. If mixed with HS-mode devices, faster fall-times are allowed.

CAUTION

The I^2C pins use a standard ±4-mA LVCMOS buffer, not the slow I/OP buffer defined in the I^2C specification. Series resistors may be necessary to reduce noise at the system level.

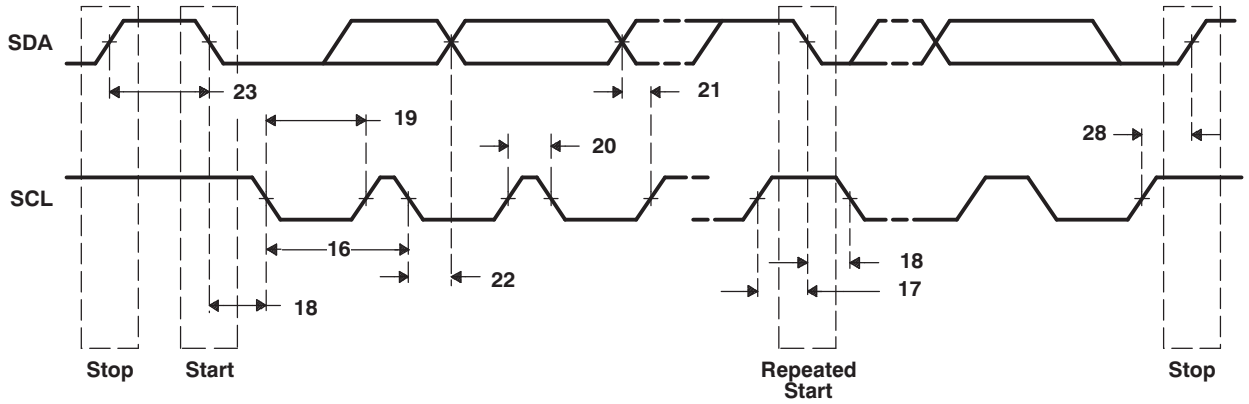

Figure 6-48. I2C Transmit Timings

6.17 Multi-Channel Buffered Serial Port (McBSP)

The primary use for the Multi-Channel Buffered Serial Port (McBSP) is for audio interface purposes. The primary audio modes that are supported by the McBSP are the AC97 and IIS modes. In addition to the primary audio modes, the McBSP supports general serial port receive and transmit operation, but is not intended to be used as a high-speed interface. The McBSP supports the following features:

- Full-duplex communication
- Double-buffered data registers, which allow a continuous data stream
- Independent framing and clocking for receive and transmit
- External shift clock generation or an internal programmable frequency shift clock
- Double-buffered data registers, which allow a continuous data stream
- Independent framing and clocking for receive and transmit
- Direct interface to industry-standard codecs, analog interface chips (AICs), and other serially connected analog-to-digital (A/D) and digital-to-analog (D/A) devices
- Direct interface to AC97 compliant devices (the necessary multiphase frame synchronization capability is provided)
- Direct interface to IIS compliant devices
- Direct interface to SPI protocol in master mode only
- A wide selection of data sizes, including 8, 12, 16, 20, 24, and 32 bits
- µ-Law and A-Law companding
- 8-bit data transfers with the option of LSB or MSB first
- Programmable polarity for both frame synchronization and data clocks
- Highly programmable internal clock and frame generation
- Direct interface to T1/E1 Framers
- Multi-channel transmit and receive of up to 128 channels

For more detailed information on the McBSP peripheral, see the *Documentation Support* section for the Multi-Channel Buffered Serial Port (McBSP) Reference Guide.

6.17.1 McBSP Peripheral Register Description(s)

Table 6-72 lists the McBSP registers, their corresponding acronyms, and the device memory locations (offsets).

Table 6-72. McBSP Registers

Offset	Acronym	Register Name
-	RBR (1)	Receive buffer register
-	RSR (1)	Receive shift register
-	XSR (1)	Transmit shift register
00h	DRR (2) (3)	Data receive register
04h	DXR (3)	Data transmit register
08h	SPCR	Serial port control register
0Ch	RCR	Receive control register
10h	XCR	Transmit control register
14h	SRGR	Sample rate generator register
18h	MCR	Multichannel Control Register
1Ch	RCERE0	Enhanced Receive Channel Enable Register 0 Partition A/B

(1) The RBR, RSR, and XSR are not directly accessible via the CPUs or the EDMA controller.
(2) The CPUs and EDMA controller can only read this register; they cannot write to it.
(3) The DRR and DXR are accessible via the CPUs or the EDMA controller.

 Copyright © 2009–2011, Texas Instruments Incorporated

Table 6-72. McBSP Registers (continued)

Offset	Acronym	Register Name
20h	XCERE0	Enhanced Transmit Channel Enable Register 0 Partition A/B
24h	PCR	Pin control register
28h	RCERE1	Enhanced Receive Channel Enable Register 1 Partition C/D
2Ch	XCERE1	Enhanced Transmit Channel Enable Register 1 Partition C/D
30h	RCERE2	Enhanced Receive Channel Enable Register 2 Partition E/F
34h	XCERE2	Enhanced Transmit Channel Enable Register 2 Partition E/F
38h	RCERE3	Enhanced Receive Channel Enable Register 3 Partition G/H
3Ch	XCERE3	Enhanced Transmit Channel Enable Register 3 Partition G/H

6.17.2 McBSP Electrical Data/Timing

6.17.2.1 Multi-Channel Buffered Serial Port (McBSP) Timing

Table 6-73. Timing Requirements for McBSP(1) (2) (see Figure 6-49)

NO.				DEVICE		UNIT
				MIN	MAX	
15(3)	t_c(CLKS)	Cycle time, CLKS	CLKS ext	38.5 or 2P		ns
16(4)	t_w(CLKS)	Pulse duration, CLKR/X high or CLKR/X low	CLKS ext	19.25 or P		ns
5	$t_{su(FRH-CKRL)}$	Setup time, external FSR high before CLKR low	CLKR int	21		ns
			CLKR ext	6		
6	$t_{h(CKRL-FRH)}$	Hold time, external FSR high after CLKR low	CLKR int	0		ns
			CLKR ext	6		
7	$t_{su(DRV-CKRL)}$	Setup time, DR valid before CLKR low	CLKR int	21		ns
			CLKR ext	6		
8	$t_{h(CKRL-DRV)}$	Hold time, DR valid after CLKR low	CLKR int	0		ns
			CLKR ext	6		
10	$t_{su(FXH-CKXL)}$	Setup time, external FSX high before CLKX low	CLKX int	21		ns
			CLKX ext	6		
11	$t_{h(CKXL-FXH)}$	Hold time, external FSX high after CLKX low	CLKX int	0		ns
			CLKX ext	10		

(1) CLKRP = CLKXP = FSRP = FSXP = 0. If polarity of any of the signals is inverted, then the timing references of that signal are also inverted.
(2) P = (1/SYSCLK4), where SYSCLK4 is an output clock of PLLC1 (see Section 3.3) .
(3) Use whichever value is greater. Minimum CLKR/X cycle times must be met, even when CLKR/X is generated by an internal clock source. The minimum CLKR/X cycle times are based on internal logic speed; the maximum usable speed may be lower due to EDMA limitations and AC timing requirements.
(4) This parameter applies to the maximum McBSP frequency. Operate serial clocks (CLKR/X) in the reasonable range of 40/60 duty cycle.

Copyright © 2009–2011, Texas Instruments Incorporated

Table 6-74. Switching Characteristics Over Recommended Operating Conditions for McBSP[(1) (2) (3)] (see Figure 6-49)

NO.	PARAMETER			DEVICE		UNIT
				MIN	MAX	
2[(4) (5)]	$t_{c(CKRX)}$	Cycle time, CLKR/X	CLKR/X int	38.5 or 2P		ns
			CLKR/X ext			
17	t_d(CLKS-CLKRX)	Delay time, CLKS high to internal CLKR/X	CLKR/X int	1	24	
3[(6)]	$t_{w(CKRX)}$	Pulse duration, CLKR/X high or CLKR/X low	CLKR/X int	19.25 - 1 or P - 1		ns
			CLKR/X ext	19.25 or P		
4	$t_{d(CKRH-FRV)}$	Delay time, CLKR high to internal FSR valid	CLKR int	-4	8	ns
			CLKR ext	3	25	
9	$t_{d(CKXH-FXV)}$	Delay time, CLKX high to internal FSX valid	CLKX int	-4	8	ns
			CLKX ext	3	25	
12	tdis(CKXH-DXHZ)	Disable time, DX high impedance following last data bit from CLKX high	CLKX int		12	ns
			CLKX ext		25	ns
13	$t_{d(CKXH-DXV)}$	Delay time, CLKX high to DX valid	CLKX int	-5 + D1[(7)]	12 + D2[(7)]	ns
			CLKX ext	3 + D1[(7)]	25 + D2[(7)]	ns
14	$t_{d(FXH-DXV)}$	Delay time, FSX high to DX valid ONLY applies when in data delay 0 (XDATDLY = 00b) mode	FSX int	0 + D1[(8)]	14 + D2[(8)]	ns
			FSX ext	0 + D1[(8)]	25 + D2[(8)]	

(1) CLKRP = CLKXP = FSRP = FSXP = 0. If polarity of any of the signals is inverted, then the timing references of that signal are also inverted.
(2) Minimum delay times also represent minimum output hold times.
(3) P = (1/SYSCLK4), where SYSCLK4 is an output clock of PLLC1 (see Section 3.3) .
(4) Use whichever value is greater. Minimum CLKR/X cycle times must be met, even when CLKR/X is generated by an internal clock source.
(5) The minimum CLKR/X cycle times are based on internal logic speed; the maximum usable speed may be lower due to EDMA limitations and AC timing requirements. Use whichever value is greater.
(6) C = H or L
S = sample rate generator input clock = P if CLKSM = 1 (P = SYSCLK3 period)
S = sample rate generator input clock = P_clks if CLKSM = 0 (P_clks = CLKS period)
H = CLKX high pulse width = (CLKGDV/2 + 1) * S if CLKGDV is even
H = (CLKGDV + 1)/2 * S if CLKGDV is odd
L = CLKX low pulse width = (CLKGDV/2) * S if CLKGDV is even
L = (CLKGDV + 1)/2 * S if CLKGDV is odd
CLKGDV should be set appropriately to ensure the McBSP bit rate does not exceed the maximum limit.
(7) Extra delay from CLKX high to DX valid applies only to the first data bit of a device, if and only if DXENA = 1 in SPCR.
If DXENA = 0, then D1 = D2 = 0
If DXENA = 1, then D1 = 6P, D2 = 12P
(8) Extra delay from FSX high to DX valid applies only to the first data bit of a device, if and only if DXENA = 1 in SPCR.
If DXENA = 0, then D1 = D2 = 0
If DXENA = 1, then D1 = 6P, D2 = 12P

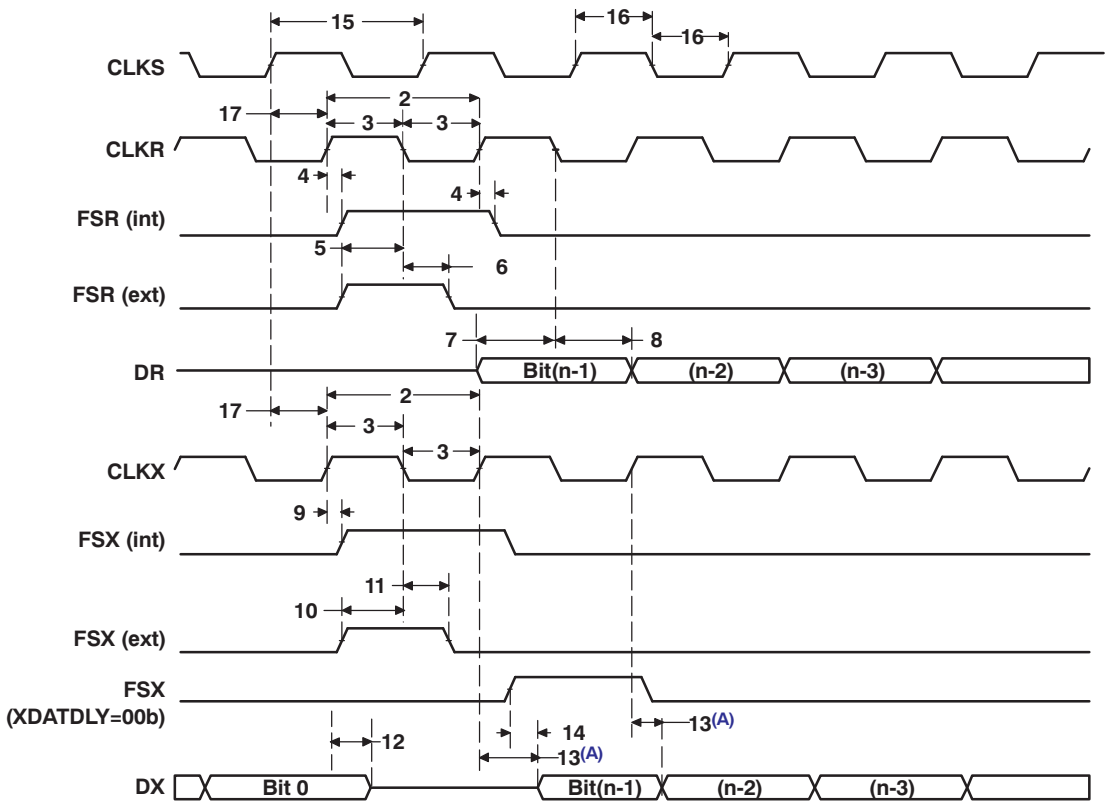

A. Parameter No. 13 applies to the first data bitonly when XDATDLY ≠ 0.

Figure 6-49. McBSP Timing

Table 6-75. McBSP as SPI Timing Requirements

CLKSTP = 10b, CLKXP = 0 (see Figure 6-50)

NO.			MASTER		UNIT
			MIN	MAX	
M30	$t_{su(DRV-CKXL)}$	Setup time, DR valid before CLKX low	16		ns
M31	$t_{h(CKXL-DRV)}$	Hold time, DR valid after CLKX low	0		ns

Table 6-76. McBSP as SPI Switching Characteristics(1) (2)

CLKSTP = 10b, CLKXP = 0 (see Figure 6-50)

NO.	PARAMETER		MASTER		UNIT
			MIN	MAX	
M33	tc(CKX)	Cycle time, CLKX	38.5 or 2P		ns
M24	$t_{d(CKXL-FXH)}$	Delay time, CLKX low to FSX high(2)	CLKXP - 2	CLKXP + 4	ns
M25	$t_{d(FXL-CKXH)}$	Delay time, FSX low to CLKX high(3)	CLKXL - 2	CLKXL + 2	ns
M26	$t_{d(CKXH-DXV)}$	Delay time, CLKX high to DX valid	-2	6	ns
M27	$t_{dis(CKXL-DXHZ)}$	Disable time, DX high impedance following last data bit from CLKX low	CLKXL - 3	CLKXL + 8	ns

(1) P = (1/SYSCLK4), where SYSCLK4 is an output clock of PLLC1 (see Section 3.3) .
(2) T = CLKX period = (1 + CLKGDV) × 2P
L_1 = CLKX low pulse width = T/2 when CLKGDV is odd or zero and = (CLKGDV/2) × 2P when CLKGDV is even.
(3) FSX should be low before the rising edge of clock to enable slave devices and then begin a SPI transfer at the rising edge of the master clock (CLKX).

Copyright © 2009–2011, Texas Instruments Incorporated

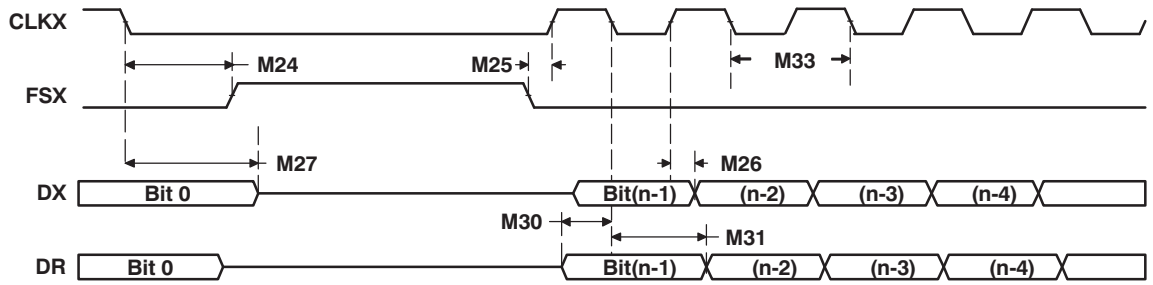

Figure 6-50. McBSP as SPI: CLKSTP = 10b, CLKXP = 0

Table 6-77. McBSP as SPI Timing Requirements

CLKSTP = 11b, CLKXP = 0

NO.			MASTER		UNIT
			MIN	MAX	
M39	$t_{su(DRV-CKXH)}$	Setup time, DR valid before CLKX high	16		ns
M40	$t_{h(CKXH-DRV)}$	Hold time, DR valid after CLKX high	1		ns

Table 6-78. McBSP as SPI Switching Characteristics(1) (2)

CLKSTP = 11b, CLKXP = 0 (see Figure 6-51)

NO.	PARAMETER		MASTER		UNIT
			MIN	MAX	
M42	tc(CKX)	Cycle time, CLKX	38.5 or 2P		ns
M34	$t_{d(CKXL-FXH)}$	Delay time, CLKX low to FSX high(3)	CLKXP - 2	CLKXP + 4	ns
M35	$t_{d(FXL-CKXH)}$	Delay time, FSX low to CLKX high(4)	CLKXP - 2	CLKXP + 2	ns
M36	$t_{d(CKXL-DXV)}$	Delay time, CLKX low to DX valid	-2	6	ns
M37	$t_{dis(CKXL-DXHZ)}$	Disable time, DX high impedance following last data bit from CLKX low	-3	8	ns
M38	$t_{d(FXL-DXV)}$	Delay time, FSX low to DX valid	CLKXH - 2	CLKXH + 10	ns

(1) P = (1/SYSCLK4), where SYSCLK4 is an output clock of PLLC1 (see Section 3.3).
(2) T = CLKX period = (1 + CLKGDV) × 2P
L_1 = CLKX low pulse width = T/2 when CLKGDV is odd or zero and = (CLKGDV/2) × 2P when CLKGDV is even
H_1 = CLKX high pulse width = T/2 when CLKGDV is odd or zero and = (CLKGDV/2 + 1) × 2P when CLKGDV is even
(3) FSRP = FSXP = 1. As a SPI master, FSX is inverted to provide active-low slave-enable output.
CLKXM = FSXM = 1, CLKRM = FSRM = 0 for master McBSP
(4) FSX should be low before the rising edge of clock to enable slave devices and then begin a SPI transfer at the rising edge of the master clock (CLKX).

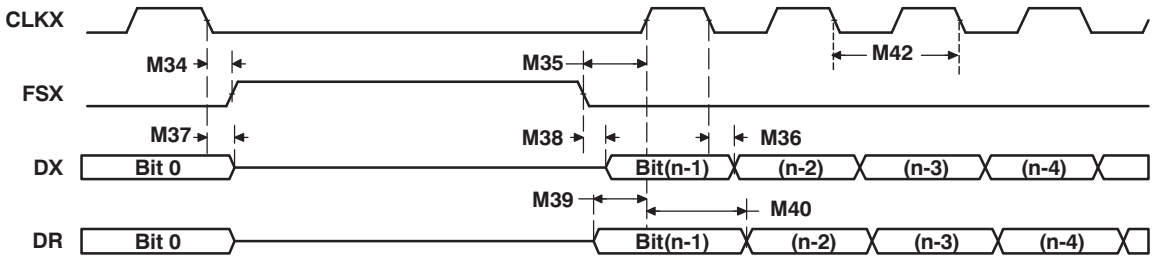

Figure 6-51. McBSP as SPI: CLKSTP = 11b, CLKXP = 0

Copyright © 2009–2011, Texas Instruments Incorporated

Table 6-79. McBSP as SPI Timing Requirements

CLKSTP = 10b, CLKXP = 1 (see Figure 6-52)

NO.			MASTER		UNIT
			MIN	MAX	
M49	$t_{su(DRV-CKXH)}$	Setup time, DR valid before CLKX high	16		ns
M50	$t_{h(CKXH-DRV)}$	Hold time, DR valid after CLKX high	0		ns

Table 6-80. McBSP as SPI Switching Characteristics(1) (2)

CLKSTP = 10b, CLKXP = 1 (see Figure 6-52)

NO.	PARAMETER		MASTER		UNIT
			MIN	MAX	
M52	tc(CKX)	Cycle time, CLKX	38.5 or 2P		ns
M43	$t_{d(CKXH-FXH)}$	Delay time, CLKX high to FSX high(3)	CLKXP - 2	CLKXP + 4	ns
M44	$t_{d(FXL-CKXL)}$	Delay time, FSX low to CLKX low(4)	CLKXH - 2	CLKXH + 2	ns
M45	$t_{d(CKXL-DXV)}$	Delay time, CLKX low to DX valid	-2	6	ns
M46	$t_{dis(CKXH-DXHZ)}$	Disable time, DX high impedance following last data bit from CLKX high	CLKXH - 3	CLKXL + 8	ns

(1) P = (1/SYSCLK4), where SYSCLK4 is an output clock of PLLC1 (see Section 3.3).
(2) T = CLKX period = (1 + CLKGDV) × 2P
H_1 = CLKX high pulse width = T/2 when CLKGDV is odd or zero and = (CLKGDV/2 + 1) × 2P when CLKGDV is even
(3) FSRP = FSXP = 1. As a SPI master, FSX is inverted to provide active-low slave-enable output.
CLKXM = FSXM = 1, CLKRM = FSRM = 0 for master McBSP
(4) FSX should be low before the rising edge of clock to enable slave devices and then begin a SPI transfer at the rising edge of the master clock (CLKX).

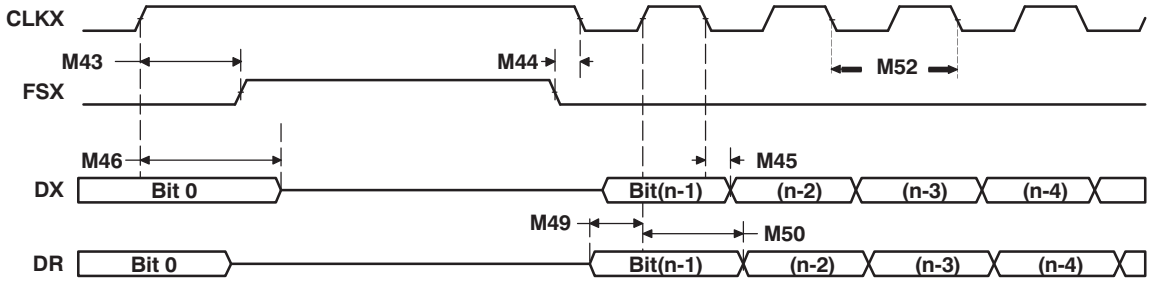

Figure 6-52. McBSP as SPI: CLKSTP = 10b, CLKXP = 1

Table 6-81. McBSP as SPI Timing Requirements

CLKSTP = 11b, CLKXP = 1 (see Figure 6-53)

NO.			MASTER		UNIT
			MIN	MAX	
M58	$t_{su(DRV-CKXL)}$	Setup time, DR valid before CLKX low	16		ns
M59	$t_{h(CKXL-DRV)}$	Hold time, DR valid after CLKX low	0		ns

Table 6-82. McBSP as SPI Switching Characteristics(1) (2)

CLKSTP = 11b, CLKXP = 1 (see Figure 6-53)

NO.	PARAMETER		MASTER		UNIT
			MIN	MAX	
M62	tc(CKX)	Cycle time, CLKX	38.5 or 2P		ns
M53	$t_{d(CKXH-FXH)}$	Delay time, CLKX high to FSX high(3)	CLKXP - 2	CLKXP + 4	ns
M54	$t_{d(FXL-CKXL)}$	Delay time, FSX low to CLKX low(4)	CLKXP - 2	CLKXP + 2	ns
M55	$t_{d(CKXL-DXV)}$	Delay time, CLKX high to DX valid	-2	6	ns
M56	$t_{dis(CKXH-DXHZ)}$	Disable time, DX high impedance following last data bit from CLKX high	-3	8	ns
M57	$t_{d(FXL-DXV)}$	Delay time, FSX low to DX valid	CLKXL - 1	CLKXL + 10	ns

(1) P = (1/SYSCLK4), where SYSCLK4 is an output clock of PLLC1 (see Section 3.3).
(2) T = CLKX period = (1 + CLKGDV) × 2P
L_1 = CLKX low pulse width = T/2 when CLKGDV is odd or zero and = (CLKGDV/2) × 2P when CLKGDV is even
H_1 = CLKX high pulse width = T/2 when CLKGDV is odd or zero and = (CLKGDV/2 + 1) × 2P when CLKGDV is even
(3) FSRP = FSXP = 1. As a SPI master, FSX is inverted to provide active-low slave-enable output.
CLKXM = FSXM = 1, CLKRM = FSRM = 0 for master McBSP
(4) FSX should be low before the rising edge of clock to enable slave devices and then begin a SPI transfer at the rising edge of the master clock (CLKX).

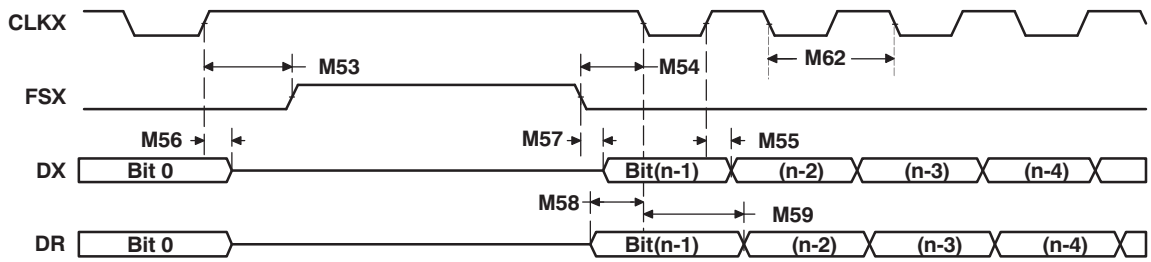

Figure 6-53. McBSP as SPI: CLKSTP = 11b, CLKXP = 1

Copyright © 2009–2011, Texas Instruments Incorporated

6.18 Timer

The device contains four software-programmable timers. Timer 0, Timer 1, Timer 3, and Timer 4 (general-purpose timers) can be programmed in 64-bit mode, dual 32-bit unchained mode, or dual 32-bit chained mode. Timer 3 supports additional features over the other timers: external clock/event input, period reload, output event tied to Real Time Out (RTO) module, external event capture, and timer counter register read reset. Timer 2 is used only as a watchdog timer. Timer 2 is tied to device reset.

- 64-bit count-up counter
- Timer modes:
  - 64-bit general-purpose timer mode (Timer 0, 1, 3, 4)
  - Dual 32-bit general-purpose timer mode (Timer 0, 1, 3, 4)
  - Watchdog timer mode (Timer 2)
- Two possible clock sources:
  - Internal clock
  - External clock/event input via timer input pins (Timer 3)
- Three possible operation modes:
  - One-time operation (timer runs for one period then stops)
  - Continuous operation (timer automatically resets after each period)
  - Continuous operation with period reload (Timer 3)
- Generates interrupts to the ARM CPU
- Generates sync event to EDMA
- Generates output event to device reset (Timer 2)
- Generates output event to Real Timer Out (RTO) module (Timer 3)
- External event capture via timer input pins (Timer 3)

For more detailed information, see the *TMS320DM36x DMSoC Timer/Watchdog Timer User's Guide* (SPRUFH0).

6.18.1 Timer Peripheral Register Description(s)

Table 6-83 lists the Timer registers, their corresponding acronyms, and the device memory locations (offsets).

Table 6-83. Timer Global Registers

Offset	Acronym	Register Description
00h	PID12	Peripheral Identification Register 12
04h	EMUMGT	Emulation Management Register
10h	TIM12	Timer Counter Register 12
14h	TIM34	Timer Counter Register 34
18h	PRD12	Timer Period Register 12
1Ch	PRD34	Timer Period Register 34
20h	TCR	Timer Control Register
24h	TGCR	Timer Global Control Register
28h	WDTCR	Watchdog Timer Control Register
34h	REL12	Timer Reload Register 12
38h	REL34	Timer Reload Register 34
3Ch	CAP12	Timer Capture Register 12
40h	CAP34	Timer Capture Register 34
44h	INTCTL_STAT	Timer Interrupt Control and Status Register

6.18.2 Timer Electrical Data/Timing

Table 6-84. Timing Requirements for Timer Input(1) (2) (see Figure 6-54)

NO.			DEVICE		UNIT
			MIN	MAX	
1	$t_{c(TIN)}$	Cycle time, TIM_IN	4P		ns
2	$t_{w(TINPH)}$	Pulse duration, TIM_IN high	0.45C	0.55C	ns
3	$t_{w(TINPL)}$	Pulse duration, TIM_IN low	0.45C	0.55C	ns
4	$t_{t(TIN)}$	Transition time, TIM_IN		5	ns

(1) GPIO001, GPIO002, GPIO003, and GPIO004 can be used as external clock inputs for Timer 3. See the *TMS320DM36x DMSoC Timer/Watchdog Timer User's Guide* for more information (SPRUFH0).
(2) P = MXI1/CLKIN cycle time in ns. For example, when MXI1/CLKIN frequency is 24 MHz use P = 41.$\overline{6}$ ns.

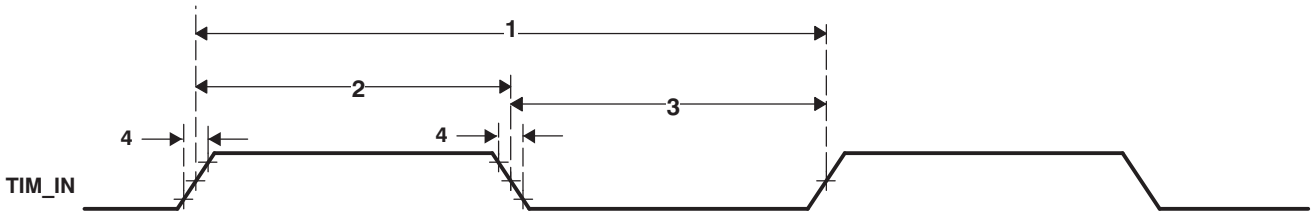

Figure 6-54. Timer Input Timing

Copyright © 2009–2011, Texas Instruments Incorporated

6.19 Pulse Width Modulator (PWM)

The pulse width modulator (PWM) feature is very common in embedded systems. It provides a way to generate a pulse periodic waveform for motor control or can act as a digital-to-analog converter with some external components. This PWM peripheral is basically a timer with a period counter and a first-phase duration comparator, where bit width of the period and first-phase duration are both programmable. The Pulse Width Modulator (PWM) modules support the following features:

- 32-bit period counter
- 32-bit first-phase duration counter
- 8-bit repeat count for one-shot operation. One-shot operation will produce N + 1 periods of the waveform, where N is the repeat counter value.
- Configurable to operate in either one-shot or continuous mode
- Buffered period and first-phase duration registers
- One-shot operation triggerable by hardware events with programmable edge transitions. (low-to-high or high-to-low).
- One-shot operation triggerable by the ISIF VSYNC output of the video processing subsystem (VPSS), which allows any of the PWM instantiations to be used as a ISIF timer. This allows the device module to support the functions provided by the ISIF timer feature (generating strobe and shutter signals).
- One-shot operation generates N+1 periods of waveform, N being the repeat count register value
- Configurable PWM output pin inactive state
- Interrupt and EDMA synchronization events

6.19.1 PWM Peripheral Register Description(s)

Table 6-85 lists the PWM registers, their corresponding acronyms, and the device memory locations (offsets).

Table 6-85. Pulse Width Modulator (PWM) Registers

Offset	Acronym	Register Description
00h	PID	PWM Peripheral Identification Register
04h	PCR	PWM Peripheral Control Register
08h	CFG	PWM Configuration Register
0Ch	START	PWM Start Register
10h	RPT	PWM Repeat Count Register
14h	PER	PWM Period Register
18h	PH1D	PWM First-Phase Duration Register

6.19.2 PWM0/1/2/3 Electrical/Timing Data

Table 6-86. Switching Characteristics Over Recommended Operating Conditions for PWM0/1/2/3 Outputs(1) (see Figure 6-55 and Figure 6-56)

NO.	PARAMETER		DEVICE		UNIT
			MIN	MAX	
1	$t_{w(PWMH)}$	Pulse duration, PWMx high	37		ns
2	$t_{w(PWML)}$	Pulse duration, PWMx low	37		ns
3	$t_{t(PWM)}$	Transition time, PWMx		5	ns
4	$t_{d(ISIF-PWMV)}$	Delay time, ISIF(VD) trigger event to PWMx valid	0	10	ns

(1) P = MXI1/CLKIN cycle time in ns. For example, when MXI1/CLKIN frequency is 24 MHz use P = 41.$\overline{6}$ ns.

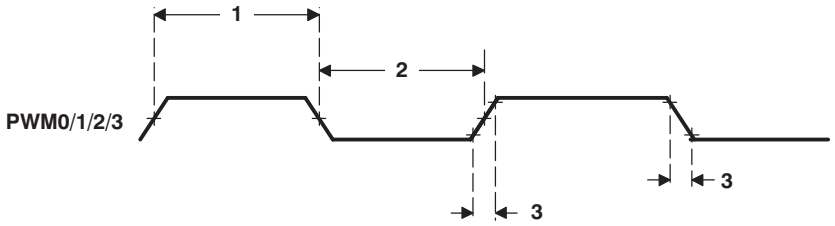

Figure 6-55. PWM Output Timing

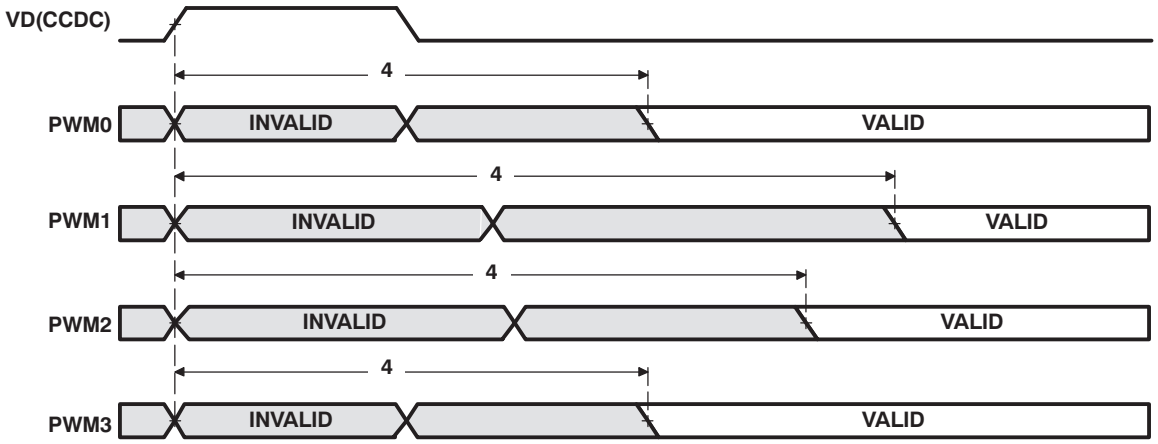

Figure 6-56. PWM Output Delay Timing

Copyright © 2009–2011, Texas Instruments Incorporated

6.20 Real Time Out (RTO)

The device uses the Real Time Out (RTO) peripheral to provide appropriate input control signals to external devices such as motor controllers. This peripheral supports the following features:

- Four separate outputs
- Trigger on Timer3 event

6.20.1 Real Time Out (RTO) Peripheral Register Description(s)

Table 6-87 lists the RTO registers, their corresponding acronyms, and the device memory locations (offsets).

Table 6-87. Real Time Out (RTO) Registers

Offset	Acronym	Register Description
0h	REVID	RTO Controller Revision ID Register
04h	CTRL_STATUS	RTO Controller Control and Status Register

6.20.2 RTO Electrical/Timing Data

Table 6-88. Switching Characteristics Over Recommended Operating Conditions for RTO Outputs (see Figure 6-57 and Figure 6-58)(1)

NO.	PARAMETER		DEVICE		UNIT
			MIN	MAX	
1	$t_{w(RTOH)}$	Pulse duration, RTOx high	$27.\overline{7}$	$52.\overline{08}$	ns
2	$t_{w(RTOL)}$	Pulse duration, RTOx low	.45C	.55C	ns
3	$t_{t(RTO)}$	Transition time, RTOx	.45C	.55C	ns
4	$t_{d(TIMER3-RTOV)}$	Delay time, Timer 3 (TINT12 or TINT34) trigger event to RTOx valid		10	ns

(1) C = MXI1/CLKIN1 cycle time in ns. For example, when MXI1/CLKIN1 frequency is 24 MHz use C = $41.\overline{6}$ ns.

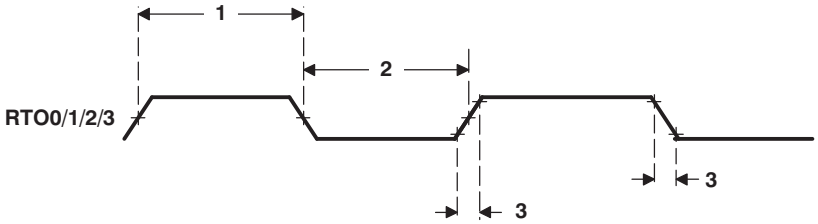

Figure 6-57. RTO Output Timing

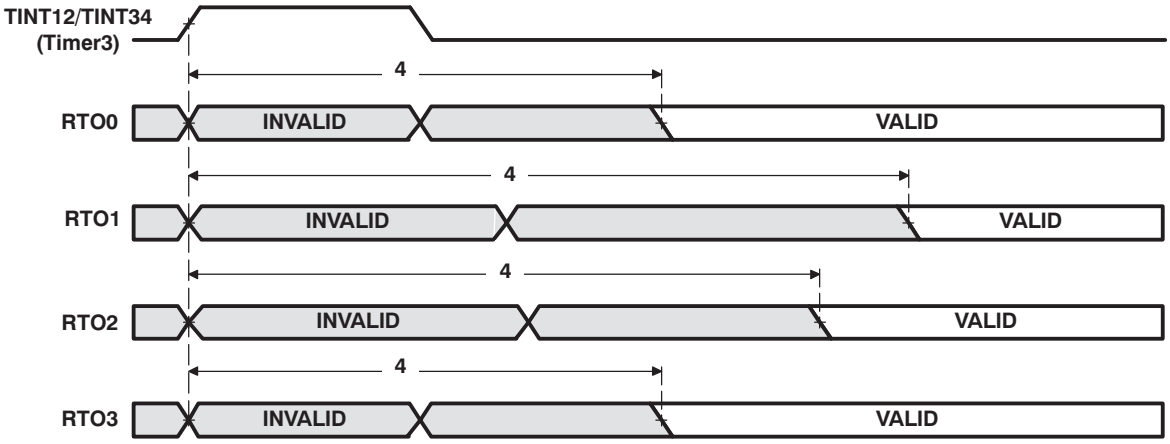

Figure 6-58. RTO Output Delay Timing

Copyright © 2009–2011, Texas Instruments Incorporated

6.21 Ethernet Media Access Controller (EMAC)

The Ethernet Media Access Controller (EMAC) provides an efficient interface between the device and the network. The EMAC supports both 10Base-T (10 Mbits/second [Mbps]) and 100Base-TX (100 Mbps) in either half- or full-duplex mode. The EMAC module also supports hardware flow control and quality of service (QOS) support.

The frequencies supported for transmit and receive clocks are fixed by the IEEE 802.3 standard as:

- 2.5 MHz for 10Mbps
- 25 MHz for 100Mbps

The EMAC controls the flow of packet data from the device to the PHY. The MDIO module controls PHY configuration and status monitoring.

The EMAC module conforms to the IEEE 802.3-2002 standard, describing the "Carrier Sense Multiple Access with Collision Detection (CSMA/CD) Access Method and Physical Layer" specifications. The IEEE 802.3 standard has also been adopted by ISO/IEC and re-designated as ISO/IEC 8802-3:2000(E).

Deviation from this standard, the EMAC module does not use the Transmit Coding Error signal MTXER. Instead of driving the error pin when an underflow condition occurs on a transmitted frame, the EMAC will intentionally generate an incorrect checksum by inverting the frame CRC, so that the transmitted frame will be detected as an error by the network

Both the EMAC and the MDIO modules interface to the device through a custom interface that allows efficient data transmission and reception. This custom interface is referred to as the EMAC control module, and is considered integral to the EMAC/MDIO peripheral. The control module is also used to multiplex and control interrupts.

For more information on the *TMS320DM36x DMSoC Ethernet Media Access Controller User's Guide* (literature number SPRUFI5).

6.21.1 EMAC Peripheral Register Description(s)

Table 6-89 lists the EMAC registers, their corresponding acronyms, and the device memory locations (offsets).

Table 6-89. Ethernet Media Access Controller (EMAC) Control Module Registers

Slave VBUS Address Offset	Acronym	Register Description
0h	CMIDVER	Identification and Version Register
04h	CMSOFTRESET	Software Reset Register
08h	CMEMCONTROL	Emulation Control Register
Ch	CMINTCTRL	Interrupt Control Register
10h	CMRXTHRESHINTEN	Receive Threshold Interrupt Enable Register
14h	CMRXINTEN	Receive Interrupt Enable Register
18h	CMTXINTEN	Transmit Interrupt Enable Register
1Ch	CMMISCINTEN	Miscellaneous Interrupt Enable Register
40h	CMRXTHRESHINTSTAT	Receive Threshold Interrupt Status Register
44h	CMRXINTSTAT	Receive Interrupt Status Register
48h	CMTXINTSTAT	Transmit Interrupt Status Register
4Ch	CMMISCINTSTAT	Miscellaneous Interrupt Status Register
70Ch	CMRXINTMAX	Receive Interrupts Per Millisecond Register
74h	CMTXINTMAX	Transmit Interrupts Per Millisecond Register

Table 6-90. Ethernet Media Access Controller (EMAC) Registers

Offset	Acronym	Register Description
0h	TXIDVER	Transmit Identification and Version Register
4h	TXCONTROL	Transmit Control Register
8h	TXTEARDOWN	Transmit Teardown Register
10h	RXIDVER	Receive Identification and Version Register
14h	RXCONTROL	Receive Control Register
18h	RXTEARDOWN	Receive Teardown Register
80h	TXINTSTATRAW	Transmit Interrupt Status (Unmasked) Register
84h	TXINTSTATMASKED	Transmit Interrupt Status (Masked) Register
88h	TXINTMASKSET	Transmit Interrupt Mask Set Register
8Ch	TXINTMASKCLEAR	Transmit Interrupt Clear Register
90h	MACINVECTOR	MAC Input Vector Register
94h	MACEOIVECTOR	MAC End of Interrupt Vector Register
A0h	RXINTSTATRAW	Receive Interrupt Status (Unmasked) Register
A4h	RXINTSTATMASKED	Receive Interrupt Status (Masked) Register
A8h	RXINTMASKSET	Receive Interrupt Mask Set Register
ACh	RXINTMASKCLEAR	Receive Interrupt Mask Clear Register
B0h	MACINTSTATRAW	MAC Interrupt Status (Unmasked) Register
B4h	MACINTSTATMASKED	MAC Interrupt Status (Masked) Register
B8h	MACINTMASKSET	MAC Interrupt Mask Set Register
BCh	MACINTMASKCLEAR	MAC Interrupt Mask Clear Register
100h	RXMBPENABLE	Receive Multicast/Broadcast/Promiscuous Channel Enable Register
104h	RXUNICASTSET	Receive Unicast Enable Set Register
108h	RXUNICASTCLEAR	Receive Unicast Clear Register
10Ch	RXMAXLEN	Receive Maximum Length Register
110h	RXBUFFEROFFSET	Receive Buffer Offset Register
114h	RXFILTERLOWTHRESH	Receive Filter Low Priority Frame Threshold Register
120h	RX0FLOWTHRESH	Receive Channel 0 Flow Control Threshold Register
124h	RX1FLOWTHRESH	Receive Channel 1 Flow Control Threshold Register
128h	RX2FLOWTHRESH	Receive Channel 2 Flow Control Threshold Register
12Ch	RX3FLOWTHRESH	Receive Channel 3 Flow Control Threshold Register
130h	RX4FLOWTHRESH	Receive Channel 4 Flow Control Threshold Register
134h	RX5FLOWTHRESH	Receive Channel 5 Flow Control Threshold Register
138h	RX6FLOWTHRESH	Receive Channel 6 Flow Control Threshold Register
13Ch	RX7FLOWTHRESH	Receive Channel 7 Flow Control Threshold Register
140h	RX0FREEBUFFER	Receive Channel 0 Free Buffer Count Register
144h	RX1FREEBUFFER	Receive Channel 1 Free Buffer Count Register
148h	RX2FREEBUFFER	Receive Channel 2 Free Buffer Count Register
14Ch	RX3FREEBUFFER	Receive Channel 3 Free Buffer Count Register
150h	RX4FREEBUFFER	Receive Channel 4 Free Buffer Count Register
154h	RX5FREEBUFFER	Receive Channel 5 Free Buffer Count Register
158h	RX6FREEBUFFER	Receive Channel 6 Free Buffer Count Register
15Ch	RX7FREEBUFFER	Receive Channel 7 Free Buffer Count Register
160h	MACCONTROL	MAC Control Register
164h	MACSTATUS	MAC Status Register
168h	EMCONTROL	Emulation Control Register
16Ch	FIFOCONTROL	FIFO Control Register
170h	MACCONFIG	MAC Configuration Register

 Copyright © 2009–2011, Texas Instruments Incorporated

Table 6-90. Ethernet Media Access Controller (EMAC) Registers (continued)

Offset	Acronym	Register Description
174h	SOFTRESET	Soft Reset Register
1D0h	MACSRCADDRLO	MAC Source Address Low Bytes Register
1D4h	MACSRCADDRHI	MAC Source Address High Bytes Register
1D8h	MACHASH1	MAC Hash Address Register 1
1DCh	MACHASH2	MAC Hash Address Register 2
1E0h	BOFFTEST	Back Off Test Register
1E4h	TPACETEST	Transmit Pacing Algorithm Test Register
1E8h	RXPAUSE	Receive Pause Timer Register
1ECh	TXPAUSE	Transmit Pause Timer Register
500h	MACADDRLO	MAC Address Low Bytes Register, Used in Receive Address Matching
504h	MACADDRHI	MAC Address High Bytes Register, Used in Receive Address Matching
508h	MACINDEX	MAC Index Register
600h	TX0HDP	Transmit Channel 0 DMA Head Descriptor Pointer Register
604h	TX1HDP	Transmit Channel 1 DMA Head Descriptor Pointer Register
608h	TX2HDP	Transmit Channel 2 DMA Head Descriptor Pointer Register
60Ch	TX3HDP	Transmit Channel 3 DMA Head Descriptor Pointer Register
610h	TX4HDP	Transmit Channel 4 DMA Head Descriptor Pointer Register
614h	TX5HDP	Transmit Channel 5 DMA Head Descriptor Pointer Register
618h	TX6HDP	Transmit Channel 6 DMA Head Descriptor Pointer Register
61Ch	TX7HDP	Transmit Channel 7 DMA Head Descriptor Pointer Register
620h	RX0HDP	Receive Channel 0 DMA Head Descriptor Pointer Register
624h	RX1HDP	Receive Channel 1 DMA Head Descriptor Pointer Register
628h	RX2HDP	Receive Channel 2 DMA Head Descriptor Pointer Register
62Ch	RX3HDP	Receive Channel 3 DMA Head Descriptor Pointer Register
630h	RX4HDP	Receive Channel 4 DMA Head Descriptor Pointer Register
634h	RX5HDP	Receive Channel 5 DMA Head Descriptor Pointer Register
638h	RX6HDP	Receive Channel 6 DMA Head Descriptor Pointer Register
63Ch	RX7HDP	Receive Channel 7 DMA Head Descriptor Pointer Register
640h	TX0CP	Transmit Channel 0 Completion Pointer Register
644h	TX1CP	Transmit Channel 1 Completion Pointer Register
648h	TX2CP	Transmit Channel 2 Completion Pointer Register
64Ch	TX3CP	Transmit Channel 3 Completion Pointer Register
650h	TX4CP	Transmit Channel 4 Completion Pointer Register
654h	TX5CP	Transmit Channel 5 Completion Pointer Register
658h	TX6CP	Transmit Channel 6 Completion Pointer Register
65Ch	TX7CP	Transmit Channel 7 Completion Pointer Register
660h	RX0CP	Receive Channel 0 Completion Pointer Register
664h	RX1CP	Receive Channel 1 Completion Pointer Register
668h	RX2CP	Receive Channel 2 Completion Pointer Register
66Ch	RX3CP	Receive Channel 3 Completion Pointer Register
670h	RX4CP	Receive Channel 4 Completion Pointer Register
674h	RX5CP	Receive Channel 5 Completion Pointer Register
678h	RX6CP	Receive Channel 6 Completion Pointer Register
67Ch	RX7CP	Receive Channel 7 Completion Pointer Register
Network Statistics Registers		
200h	RXGOODFRAMES	Good Receive Frames Register
204h	RXBCASTFRAMES	Broadcast Receive Frames Register

Table 6-90. Ethernet Media Access Controller (EMAC) Registers (continued)

Offset	Acronym	Register Description
208h	RXMCASTFRAMES	Multicast Receive Frames Register
20Ch	RXPAUSEFRAMES	Pause Receive Frames Register
210h	RXCRCERRORS	Receive CRC Errors Register
214h	RXALIGNCODEERRORS	Receive Alignment/Code Errors Register
218h	RXOVERSIZED	Receive Oversized Frames Register
21Ch	RXJABBER	Receive Jabber Frames Register
220h	RXUNDERSIZED	Receive Undersized Frames Register
224h	RXFRAGMENTS	Receive Frame Fragments Register
228h	RXFILTERED	Filtered Receive Frames Register
22Ch	RXQOSFILTERED	Receive QOS Filtered Frames Register
230h	RXOCTETS	Receive Octet Frames Register
234h	TXGOODFRAMES	Good Transmit Frames Register
238h	TXBCASTFRAMES	Broadcast Transmit Frames Register
23Ch	TXMCASTFRAMES	Multicast Transmit Frames Register
240h	TXPAUSEFRAMES	Pause Transmit Frames Register
244h	TXDEFERRED	Deferred Transmit Frames Register
248h	TXCOLLISION	Transmit Collision Frames Register
24Ch	TXSINGLECOLL	Transmit Single Collision Frames Register
250h	TXMULTICOLL	Transmit Multiple Collision Frames Register
254h	TXEXCESSIVECOLL	Transmit Excessive Collision Frames Register
258h	TXLATECOLL	Transmit Late Collision Frames Register
25Ch	TXUNDERRUN	Transmit Underrun Error Register
260h	TXCARRIERSENSE	Transmit Carrier Sense Errors Register
264h	TXOCTETS	Transmit Octet Frames Register
268h	FRAME64	Transmit and Receive 64 Octet Frames Register
26Ch	FRAME65T127	Transmit and Receive 65 to 127 Octet Frames Register
270h	FRAME128T255	Transmit and Receive 128 to 255 Octet Frames Register
274h	FRAME256T511	Transmit and Receive 256 to 511 Octet Frames Register
278h	FRAME512T1023	Transmit and Receive 512 to 1023 Octet Frames Register
27Ch	FRAME1024TUP	Transmit and Receive 1024 to RXMAXLEN Octet Frames Register
280h	NETOCTETS	Network Octet Frames Register
284h	RXSOFOVERRUNS	Receive FIFO or DMA Start of Frame Overruns Register
288h	RXMOFOVERRUNS	Receive FIFO or DMA Middle of Frame Overruns Register
28Ch	RXDMAOVERRUNS	Receive DMA Overruns Register

Table 6-91. EMAC Descriptor Memory

HEX ADDRESS RANGE	ACRONYM	DESCRIPTION
0x01D0 8000 - 0x01D0 9FFF	–	EMAC Control Module Descriptor Memory

Copyright © 2009–2011, Texas Instruments Incorporated

6.21.2 Ethernet Media Access Controller (EMAC) Electrical Data/Timing

Table 6-92. Timing Requirements for MRCLK (see Figure 6-59)

NO.			10 Mbps		100 Mbps		UNIT
			MIN	MAX	MIN	MAX	
1	$t_{c(MRCLK)}$	Cycle time, MRCLK	400		40		ns
2	$t_{w(MRCLKH)}$	Pulse duration, MRCLK high	140		14		ns
3	$t_{w(MRCLKL)}$	Pulse duration, MRCLK low	140		14		ns

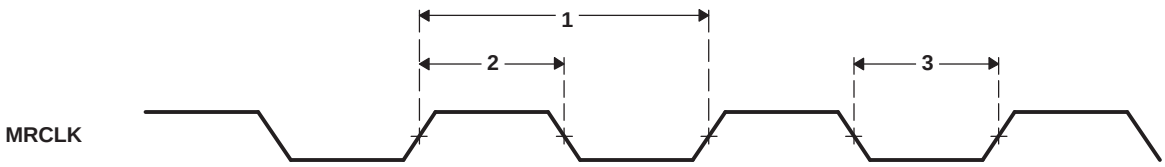

Figure 6-59. MRCLK Timing (EMAC - Receive)

Table 6-93. Timing Requirements for MTCLK (see Figure 6-59)

NO.			10 Mbps		100 Mbps		UNIT
			MIN	MAX	MIN	MAX	
1	$t_{c(MTCLK)}$	Cycle time, MTCLK	400		40		ns
2	$t_{w(MTCLKH)}$	Pulse duration, MTCLK high	140		14		ns
3	$t_{w(MTCLKL)}$	Pulse duration, MTCLK low	140		14		ns

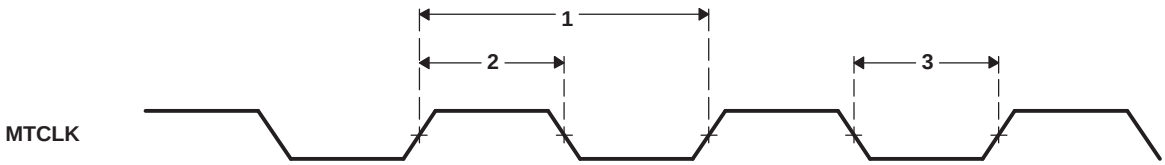

Figure 6-60. MTCLK Timing (EMAC - Transmit)

Table 6-94. Timing Requirements for EMAC MII Receive 10/100 Mbit/s(1) (see Figure 6-61)

NO.			MIN	MAX	UNIT
1	$t_{su(MRXD-MRCLKH)}$	Setup time, receive selected signals valid before MRCLK high	8		ns
2	$t_{h(MRCLKH-MRXD)}$	Hold time, receive selected signals valid after MRCLK high	8		ns

(1) Receive selected signals include: MRXD3-MRXD0, MRXDV, and MRXER.

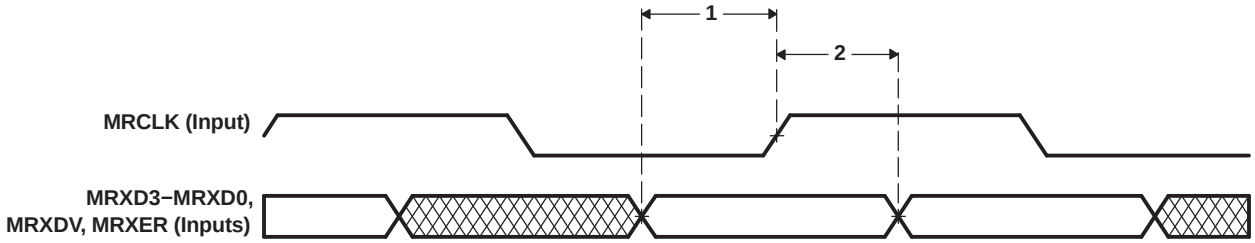

Figure 6-61. EMAC Receive Interface Timing

Table 6-95. Switching Characteristics Over Recommended Operating Conditions for EMAC MII Transmit

Table 6-95. Switching Characteristics Over Recommended Operating Conditions for EMAC MII Transmit 10/100 Mbit/s(1) (see Figure 6-62) (continued)

10/100 Mbit/s(1) (see Figure 6-62)

NO.			MIN	MAX	UNIT
1	$t_{d(MTCLKH-MTXD)}$	Delay time, MTCLK high to transmit selected signals valid	5	25	ns

(1) Transmit selected signals include: MTXD3-MTXD0, and MTXEN.

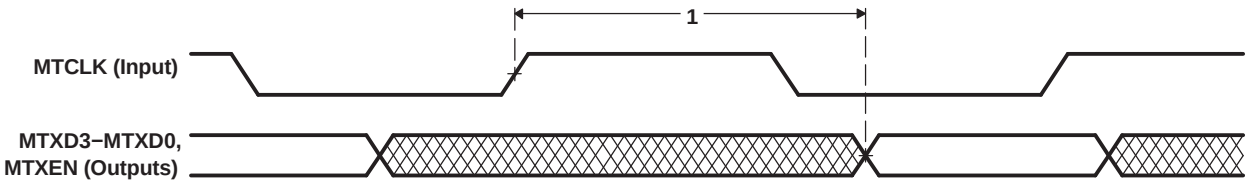

Figure 6-62. EMAC Transmit Interface Timing

Copyright © 2009–2011, Texas Instruments Incorporated

6.22 Management Data Input/Output (MDIO)

The Management Data Input/Output (MDIO) module continuously polls all 32 MDIO addresses in order to enumerate all PHY devices in the system.

The Management Data Input/Output (MDIO) module implements the 802.3 serial management interface to interrogate and control Ethernet PHY(s) using a shared two-wire bus. Host software uses the MDIO module to configure the auto-negotiation parameters of each PHY attached to the EMAC, retrieve the negotiation results, and configure required parameters in the EMAC module for correct operation. The module is designed to allow almost transparent operation of the MDIO interface, with very little maintenance from the core processor. Only one PHY may be connected at any given time.

For more detailed information on the MDIO peripheral, see the *TMS320DM36x DMSoC Ethernet Media Access Controller User's Guide* (literature number SPRUFI5).

6.22.1 MDIO Peripheral Register Description(s)

Table 6-96 lists the MDIO registers, their corresponding acronyms, and the device memory locations (offsets).

Table 6-96. Management Data Input/Output (MDIO) Registers

Offset	Acronym	Register Description
0h	VERSION	Identification and Version Register
04h	CONTROL	MDIO Control Register
08h	ALIVE	PHY Alive Status register
Ch	LINK	PHY Link Status Register
10h	LINKINTRAW	MDIO Link Status Change Interrupt (Unmasked) Register
14h	LINKINTMASKED	MDIO Link Status Change Interrupt (Masked) Register
20h	USERINTRAW	MDIO User Command Complete Interrupt (Unmasked) Register
24h	USERINTMASKED	MDIO User Command Complete Interrupt (Masked) Register
28h	USERINTMASKSET	MDIO User Command Complete Interrupt Mask Set Register
2Ch	USERINTMASKCLEAR	MDIO User Command Complete Interrupt Mask Clear Register
80h	USERACCESS0	MDIO User Access Register 0
84h	USERPHYSEL0	MDIO User PHY Select Register 0
88h	USERACCESS1	MDIO User Access Register 1
8Ch	USERPHYSEL1	MDIO User PHY Select Register 1

6.22.2 Management Data Input/Output (MDIO) Electrical Data/Timing

Table 6-97. Timing Requirements for MDIO Input (see Figure 6-63 and Figure 6-64)

NO.			DEVICE		UNIT
			MIN	MAX	
1	$t_{c(MDCLK)}$	Cycle time, MDCLK	400		ns
2	$t_{w(MDCLK)}$	Pulse duration, MDCLK high/low	180		ns
3	$t_{t(MDCLK)}$	Transition time, MDCLK		5	ns
4	$t_{su(MDIO-MDCLKH)}$	Setup time, MDIO data input valid before MDCLK high	10		ns
5	$t_{h(MDCLKH-MDIO)}$	Hold time, MDIO data input valid after MDCLK high	0		ns

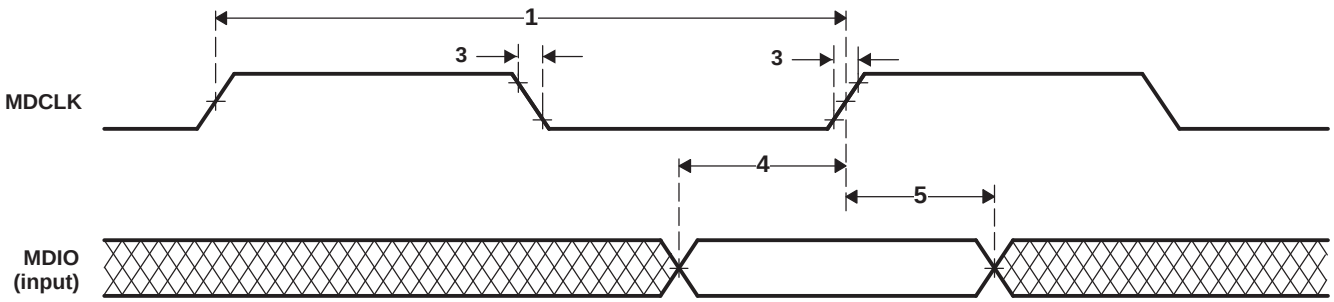

Figure 6-63. MDIO Input Timing

Table 6-98. Switching Characteristics Over Recommended Operating Conditions for MDIO Output (see Figure 6-64)

NO.			DEVICE		UNIT
			MIN	MAX	
7	$t_{d(MDCLKL-MDIO)}$	Delay time, MDCLK low to MDIO data output valid		100	ns

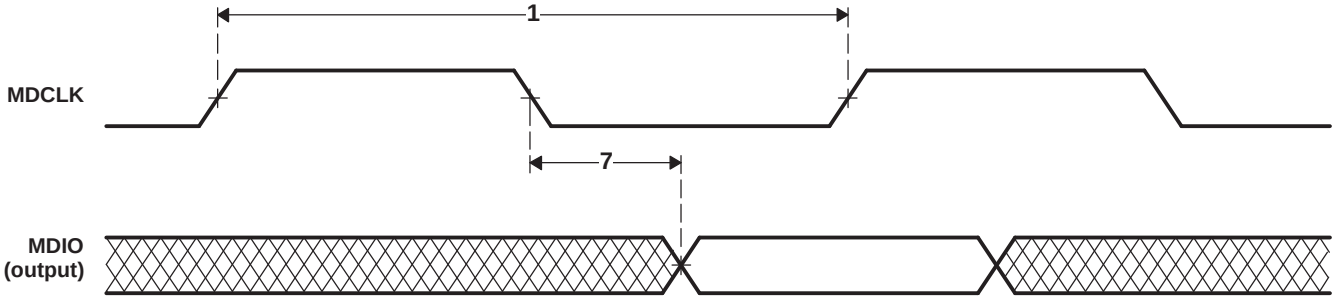

Figure 6-64. MDIO Output Timing

Copyright © 2009–2011, Texas Instruments Incorporated

6.23 Host-Port Interface (HPI) Peripheral

Note: HPI is pin multiplexed with Asynchronous EMIF at the output pin. HPI is available only when boot mode selected is HPI boot mode. In this configuration, the device will always act as a slave.

6.23.1 HPI Device-Specific Information

The device includes a user-configurable 16-bit Host-port interface (HPI16).

- Multiplexed (address/data) operation
- Configurable single full-word cycle and dual half-word cycle access modes
- Bursting available utilizing 8-word read and write FIFOs
- HPIA register supports auto-incrementing
- HPID register/FIFOs providing data-path between external host interface and system bus
- Multiple strobes and control signals to allow flexible host connection
- Software control of data prefetching to the HPID/FIFOs
- DMSoC-to-Host interrupt output signal controlled by HPIC accesses
- Host-to-DMSoC interrupt controlled by HPIC accesses

NOTE: The device HPI ***does not*** support the $\overline{\text{HAS}}$ feature. For proper HPI operation if the $\overline{\text{HAS}}$ pin is routed out, the $\overline{\text{HAS}}$ pin ***must*** be pulled up via an external resistor.

The device HPICTL register (0x01C4 0024) is part of the System Module Registers. The HPICTL register controls write access to the HPI peripheral control and address registers as well as determines the host time-out value.

6.23.2 HPI Bus Master

The HPI peripheral includes a bus master interface that allows external device initiated transfers to access the DM365 system bus. See the *Master Peripheral Mem Map* column in Table 2-3, the device Memory Map.

6.23.3 HPI Peripheral Register Description(s)

Table 6-99 lists the HPI registers, their corresponding acronyms, and the device memory locations (offsets).

Table 6-99. HPI Registers

Offset	Acronym	Register Description
0h	PID	Peripheral Identification Register
4h	PWREMU_MGMT	Power and Emulation Management Register
30h	HPIC	Host Port Interface Control Register
34h	HPIAW	Host Port Interface Write Address Register
38h	HPIAR	Host Port Interface Read Address Register

6.23.4 HPI Electrical Data/Timing

Table 6-100. Timing Requirements for Host-Port Interface Cycles(1) (2) (see Figure 6-65 and Figure 6-66)

NO.			DEVICE		UNIT
			MIN	MAX	
1	$t_{su(SELV-HSTBL)}$	Setup time, select signals(3) valid before $\overline{HSTROBE}$ low	6		ns
2	$t_{h(HSTBL-SELV)}$	Hold time, select signals(3) valid after $\overline{HSTROBE}$ low	2		ns
3	$t_{w(HSTBL)}$	Pulse duration, $\overline{HSTROBE}$ active low	15		ns
4	$t_{w(HSTBH)}$	Pulse duration, $\overline{HSTROBE}$ inactive high between consecutive accesses	2P		ns
11	$t_{su(HDV-HSTBH)}$	Setup time, host data valid before $\overline{HSTROBE}$ high	5		ns
12	$t_{h(HSTBH-HDV)}$	Hold time, host data valid after $\overline{HSTROBE}$ high	2		ns
13	$t_{h(HRDYL-HSTBL)}$	Hold time, $\overline{HSTROBE}$ high after $\overline{HRDY}$ low. $\overline{HSTROBE}$ should not be inactivated until $\overline{HRDY}$ is active (low); otherwise, HPI writes will not complete properly.	2		ns

(1) $\overline{HSTROBE}$ refers to the following logical operation on $\overline{HCS}$, $\overline{HDS1}$, and $\overline{HDS2}$: [NOT($\overline{HDS1}$ XOR $\overline{HDS2}$)] OR $\overline{HCS}$.
(2) P = PLLC1.SYSCLK4 period, where SYSCLK4 is an output clock of PLLC1. For more details, see Section 3.3, *Device Clocking*
(3) Select signals include: HCNTLA, HCNTLB, HR/$\overline{W}$ and HHWIL.

Copyright © 2009–2011, Texas Instruments Incorporated

Table 6-101. Switching Characteristics for Host-Port Interface Cycles[(1) (2) (3)] (see Figure 6-65 and Figure 6-66)

NO.	PARAMETER			DEVICE MIN	DEVICE MAX	UNIT
5	$t_{d(HSTBL-HRDYV)}$	Delay time, $\overline{HSTROBE}$ low to $\overline{HRDY}$ valid	For HPI Write, $\overline{HRDY}$ can go high (*not ready*) for these HPI Write conditions; otherwise, $\overline{HRDY}$ stays low (*ready*): *Case 1*: Back-to-back HPIA writes (can be either first or second half-word) *Case 2*: HPIA write following a PREFETCH command (can be either first or second half-word) *Case 3*: HPID write when FIFO is full or flushing (can be either first or second half-word) *Case 4*: HPIA write and Write FIFO not empty For HPI Read, $\overline{HRDY}$ can go high (*not ready*) for these HPI Read conditions: *Case 1*: HPID read (with auto-increment) and data not in Read FIFO (can only happen to first half-word of HPID access) *Case 2*: First half-word access of HPID Read without auto-increment For HPI Read, $\overline{HRDY}$ stays low (*ready*) for these HPI Read conditions: *Case 1*: HPID read with auto-increment and data is already in Read FIFO (applies to either half-word of HPID access) *Case 2*: HPID read without auto-increment and data is already in Read FIFO (always applies to second half-word of HPID access) *Case 3*: HPIC or HPIA read (applies to either half-word access)		17	ns
6	$t_{en(HSTBL-HDLZ)}$	Enable time, HD driven from $\overline{HSTROBE}$ low		2		ns
7	$t_{d(HRDYL-HDV)}$	Delay time, $\overline{HRDY}$ low to HD valid			0	ns
8	$t_{oh(HSTBH-HDV)}$	Output hold time, HD valid after $\overline{HSTROBE}$ high		1.5		ns
14	$t_{dis(HSTBH-HDV)}$	Disable time, HD high-impedance from $\overline{HSTROBE}$ high			15	ns
15	$t_{d(HSTBL-HDV)}$	Delay time, $\overline{HSTROBE}$ low to HD valid	For HPI Read. Applies to conditions where data is already residing in HPID/FIFO: *Case 1*: HPIC or HPIA read *Case 2*: First half-word of HPID read with auto-increment and data is already in Read FIFO *Case 3*: Second half-word of HPID read with or without auto-increment		18	ns

(1) P = PLLC1.SYSCLK4 period, where SYSCLK4 is an output clock of PLLC1. For more details, see Section 3.3, *Device Clocking*.
(2) $\overline{HSTROBE}$ refers to the following logical operation on $\overline{HCS}$, $\overline{HDS1}$, and $\overline{HDS2}$: [NOT($\overline{HDS1}$ XOR $\overline{HDS2}$)] OR $\overline{HCS}$.
(3) By design, whenever $\overline{HCS}$ is driven inactive (high), HPI will drive $\overline{HRDY}$ active (low).

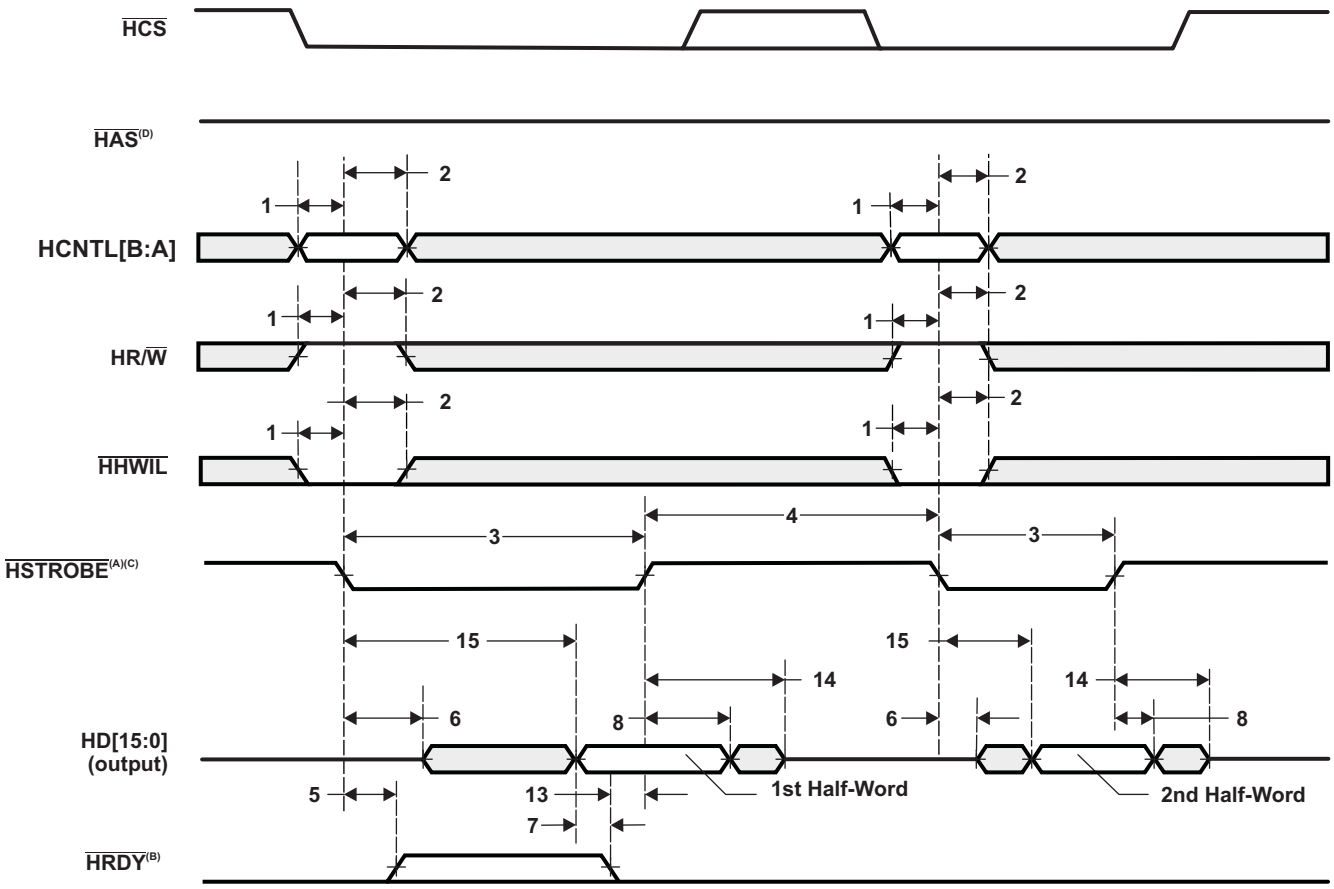

A. HSTROBE refers to the following logical operation on HCS, HDS1, and HDS2: [NOT(HDS1 XOR HDS2)] or HCS.

B. Depending on the type of write or read operation (HPID without auto-incrementing; HPIA, HPIC, or HPID with auto-incrementing) and the state of the FIFO, transitions on HRDY may or may not occur.

C. HCS reflects typical HCS behavior when HSTROBE assertion is caused by HDS1 or HDS2. HCS timing requirements are reflected by parameters for HSTROBE.

D. For proper HPI operation, HAS must be pulled up via an external resistor.

Figure 6-65. HPI16 Read Timing (HAS Not Used, Tied High)

Copyright © 2009–2011, Texas Instruments Incorporated

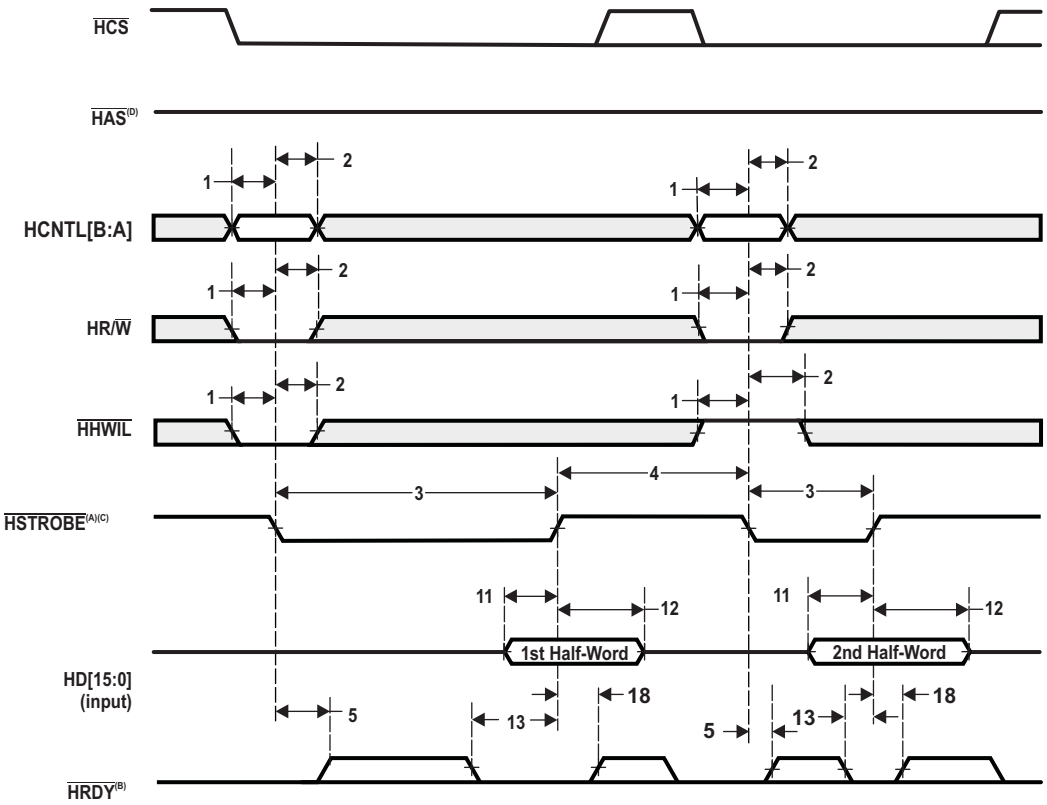

A. HSTROBE refers to the following logical operation on HCS, HDS1, and HDS2: [NOT(HDS1 XOR HDS2)] OR HCS.

B. Depending on the type of write or read operation (HPID without auto-incrementing; HPIA, HPIC, or HPID with auto-incrementing) and the state of the FIFO, transitions on HRDY may or may not occur.

C. HCS reflects typical HCS behavior when HSTROBE assertion is caused by HDS1 or HDS2. HCS timing requirements are reflected by parameters for HSTROBE.

D. For proper HPI operation, HAS must be pulled up via an external resistor.

Figure 6-66. HPI16 Write Timing (HAS Not Used, Tied High)

6.24 Key Scan

The device contains Key Scan module that supports two types of Key Matrices - 4x4 and 5x3. It also supports the following features :

- Supports the following two scan modes
  - Channel Interval mode
  - Scan Interval mode
- Programmable key scan time
  - Strobe time
  - Interval time
- Two input detection modes
  - Direct mode
  - 3-Data check mode
- Supports one interrupt to detect the following:
  - Key input changes
  - Periodic time intervals after a key is pressed

6.24.1 Key Scan Peripheral Register Description(s)

Table 6-102 lists the Key Scan registers, their corresponding acronyms, and the device memory locations (offsets).

Table 6-102. Key Scan Registers

Offset	Register	Description
0x0	KEYCTRL	Module Control register
0x4	INTCENA	Interrupt Enable control
0x8	INTFLG	Interrupt Flag control
0xC	INTCLR	Interrupt Clear control
0x10	STRBWIDTH	Strobe width
0x14	INTERVALTIME	Interval Time
0x18	CONTITIME	Continuous timer
0x1C	CURRENTST	Keyscan current status
0x20	PREVIOUSST	Keyscan previous status
0x24	EMUCTRL	Emulation control

6.24.2 Key Scan Electrical Data/Timing

Table 6-103. Timing Requirements for Keyscan (see Figure 6-63 and Figure 6-64)

NO.			DEVICE MIN	DEVICE MAX	UNIT
1	$t_{w(KEYOUTV)}$	Pulse duration, Keyscan out (active low mode)	(STWIDTH + 1)*CLK_P-1 (1) (2)		ns
2	$t_{w(KEYOUTL)}$	Pulse duration, Keyscan out (always out mode)	(STWIDTH + 1)*CLK_P-1 (1) (2)		ns
3	$t_{su(KEYOUT-KEYIN)}$	Setup time, Keyscan input (always out mode)	20		ns
		Setup time, Keyscan input (active low mode)			
4	$t_{h(KEYOUT-KEYIN)}$	Hold time, Keyscan input (always out mode)	0		ns
		Hold time, Keyscan input (active low mode)			

(1) STWIDTH = the value programmed into the STRBWIDTH register.
(2) CLK_P = 1/(PLLC1.AUXCLK/(DIV3+1)) or 1/(RTCXI), where RTCXI is the PRTCSS oscillator input pin frequency of 32.768kHz.

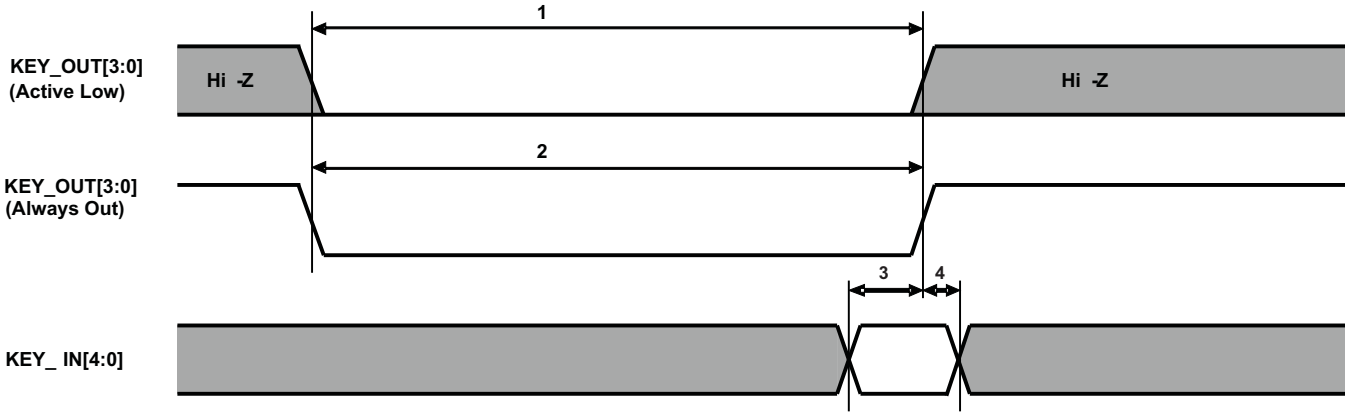

Figure 6-67. Key Scan Timing

Copyright © 2009–2011, Texas Instruments Incorporated

6.25 Analog-to-Digital Converter (ADC)

The device has a 6-channel 10-bit Analog-to-Digital Converter (ADC) interface. The analog-to-digital converter (ADC) feature is very common in embedded systems. The following features are supported on the Analog-to-Digital Converter (ADC):

- Six configurable analog input selects
- Successive Approximation type 10 bit A-D converter
- Programmable Sampling / Conversion Time (base clock is AUXCLK)
- Channel select by Auto Scan conversion
- Mode select by *One-shot* mode or *Free-run* mode
- Programmable setup (idle) period to secure A/D sampling start time
- Supports the clock stop signals to connect the PSC

For Analog-to-Digital Converter characteristics, see Section 5.2 and Section 5.3.

6.25.1 Analog-to-Digital Converter (ADC) Peripheral Register Description(s)

Table 6-104 lists the ADC registers, their corresponding acronyms, and the device memory locations (offsets).

Table 6-104. Analog-to-Digital Converter (ADC) Interface Registers

Offset	Register	Description
0x0	ADCTL	Control register
0x4	CMPTGT	Comparator target channel
0x8	CMPLDAT	Comparison A/D Lower data
0xC	CMPUDAT	Comparison A/D Upper data
0x10	SETDIV	SETUP divide value for start A/D conversion
0x14	CHSEL	Analog Input channel select
0x18	AD0DAT	A/D conversion data 0
0x1C	AD1DAT	A/D conversion data 1
0x20	AD2DAT	A/D conversion data 2
0x24	AD3DAT	A/D conversion data 3
0x28	AD4DAT	A/D conversion data 4
0x2C	AD5DAT	A/D conversion data 5
0x30	EMUCTRL	Emulation Control

6.26 Voice Codec

The device has Voice Codec with FIFO (Read FIFO/Write FIFO). The following features are supported on the Voice Codec module.

- 16bit x 16 word FIFO for Recording/Playback data transfer
- Full differential Microphone Amplifier
- Monaural single ended Line output
- Monaural Speaker Amplifier (BTL)
- Dynamic Range: 70dB(DAC)
- Dynamic Range: 70dB(ADC)
- 200-300mW Speaker output at R_L = 8Ω
- Sampling frequency: 8 KHz or 16 KHz
- Automatic Level Control for Recording

- Programmable Function by Register Control
  - Digital Attenuator of DAC: 0 dB to -62 dB
  - Digital gain control for Recording (0/ +6/ +12/ +18dB)
  - Power Up/Down Control for each module
  - 20 dB/26 dB Boost Selectable for Microphone Input
  - Two Stage Notch filter

For Voice Codec characteristics, see Section 5.2 and Section 5.3.

6.26.1 Voice Codec Register Description(s)

Table 6-105 lists the Voice Codec registers, their corresponding acronyms, and the device memory locations (offsets).

Table 6-105. Voice Codec Registers

Offset	Register	Description
0x00	VC_PID	VCIF PID
0x04	VC_CTRL	VCIF Control Register
0x08	VC_INTEN	VCIF Interrupt enable
0x0C	VC_INTSTATUS	VCIF Interrupt status
0x10	VC_INTCLR	VCIF Interrupt status clear
0x14	VC_EMUL_CTRL	VCIF emulator Control
0x20	RFIFO	VCIF Read FIFO access register
0x24	WFIFO	VCIF Write FIFO access register
0x28	FIFOSTAT	FIFO Status
0x80	VC_REG00	Notch filter parameter 1
0x84	VC_REG01	Notch filter parameter 1
0x88	VC_REG02	Notch filter parameter 2
0x8C	VC_REG03	Notch filter parameter 2
0x90	VC_REG04	Recording side mode control
0x94	VC_REG05	PGM & MIC gain
0x98	VC_REG06	ALC
0xA4	VC_REG09	Digital soft mute/attention
0xA8	VC_REG10	Digital soft mute/attention
0xB0	VC_REG12	Power up/down control

Copyright © 2009–2011, Texas Instruments Incorporated

6.27 IEEE 1149.1 JTAG

The JTAG[1] interface is used for BSDL testing and emulation of the device.

The device requires that both $\overline{\text{TRST}}$ and $\overline{\text{RESET}}$ be asserted upon power up to be properly initialized. While $\overline{\text{RESET}}$ initializes the device, $\overline{\text{TRST}}$ initializes the device's emulation logic. Both resets are required for proper operation.

While both $\overline{\text{TRST}}$ and $\overline{\text{RESET}}$ need to be asserted upon power up, only $\overline{\text{RESET}}$ needs to be released for the device to boot properly. $\overline{\text{TRST}}$ may be asserted indefinitely for normal operation, keeping the JTAG port interface and device's emulation logic in the reset state.

$\overline{\text{TRST}}$ only needs to be released when it is necessary to use a JTAG controller to debug the device or exercise the device's boundary scan functionality. Note: $\overline{\text{TRST}}$ is synchronous and ***must*** be clocked by TCK; otherwise, the boundary scan logic may not respond as expected after $\overline{\text{TRST}}$ is asserted.

$\overline{\text{RESET}}$ must be released only in order for boundary-scan JTAG to read the variant field of IDCODE correctly. Other boundary-scan instructions work correctly independent of current state of $\overline{\text{RESET}}$.

For maximum reliability, the device includes an internal pulldown (PD) on the $\overline{\text{TRST}}$ pin to ensure that $\overline{\text{TRST}}$ will always be asserted upon power up and the device's internal emulation logic will always be properly initialized.

JTAG controllers from Texas Instruments actively drive $\overline{\text{TRST}}$ high. However, some third-party JTAG controllers may not drive $\overline{\text{TRST}}$ high but expect the use of a pullup resistor on $\overline{\text{TRST}}$.

When using this type of JTAG controller, assert $\overline{\text{TRST}}$ to initialize the device after power up and externally drive $\overline{\text{TRST}}$ high before attempting any emulation or boundary scan operations. Following the release of $\overline{\text{RESET}}$, the low-to-high transition of $\overline{\text{TRST}}$ must be "seen" to latch the state of EMU1 and EMU0. The EMU[1:0] pins configure the device for either Boundary Scan mode or Emulation mode. For more detailed information, see the terminal functions section of this data sheet.

6.27.1 JTAG Register Description(s)

Table 6-105 shows the DEVICE ID register (which includes the JTAG ID related information), its corresponding acronym, and the device memory location. For more details on the DEVICE ID register bit fields, see the *TMS320DM36x DMSoC ARM Subsystem* Reference Guide (literature number SPRUFG5).

Table 6-106. DEVICE ID Register

HEX ADDRESS RANGE	ACRONYM	REGISTER NAME	COMMENTS
0x01C4 0028	DEVICEID	JTAG Identification Register	Read-only. Provides 32-bit JTAG ID of the device.

(1) IEEE Standard 1149.1-1990 Standard-Test-Access Port and Boundary Scan Architecture.

The DEVICE ID register is a read-only register that identifies to the customer the JTAG/Device ID. For the device, the DEVICE ID register resides at address location 0x01C4 0028. The register hex value for the device is: 0xXB70 002F where 'X' denotes the silicon revision of the device. For more details on the silicon revision, see the *TMS320DM365 DMSoC Silicon Errata* (literature number SPRZ294).

6.27.2 JTAG Test-Port Electrical Data/Timing

Table 6-107. Timing Requirements for JTAG Test Port (see Figure 6-68)

NO.			DEVICE		UNIT
			MIN	MAX	
1	$t_{c(TCK)}$	Cycle time, TCK	50		ns
2	tw(TCKH)	Pulse duration, TCK high	20		ns
3	tw(TCKL)	Pulse duration, TCK low	20		ns
4	$t_{su(TDIV-RTCKH)}$	Setup time, TDI valid before RTCK high	5		ns
5	$t_{h(RTCKH-TDIIV)}$	Hold time, TDI valid after RTCK high	10		ns
6	$t_{su(TMSV-RTCKH)}$	Setup time, TMS valid before RTCK high	5		ns
7	$t_{h(RTCKH-TMSV)}$	Hold time, TMS valid after RTCK high	10		ns

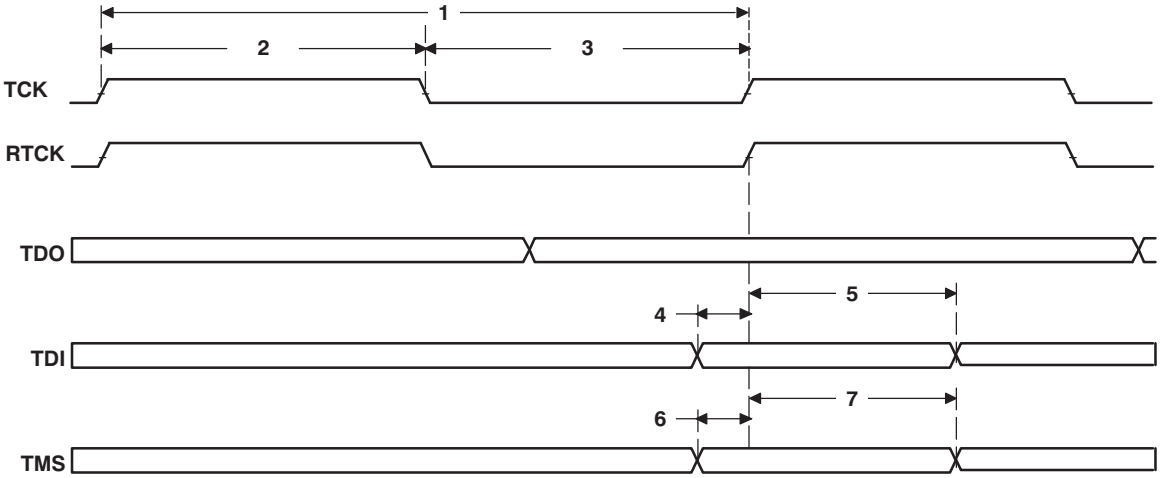

Figure 6-68. JTAG Input Timing

Copyright © 2009–2011, Texas Instruments Incorporated

Table 6-108. Switching Characteristics Over Recommended Operating Conditions for JTAG Test Port (see Figure 6-68)

NO.	PARAMETER		DEVICE		UNIT
			MIN	MAX	
8	$t_{c(RTCK)}$	Cycle time, RTCK	50		ns
9	tw(RTCKH)	Pulse duration, RTCK high	20		ns
10	tw(RTCKL)	Pulse duration, RTCK low	20		ns
11	$t_{r(all\ JTAG\ outputs)}$	Rise time, all JTAG outputs		5	ns
12	$t_{f(all\ JTAG\ outputs)}$	Fall time, all JTAG outputs		5	ns
13	$t_{d(RTCKL-TDOV)}$	Delay time, TCK low to TDO valid	0	23	ns

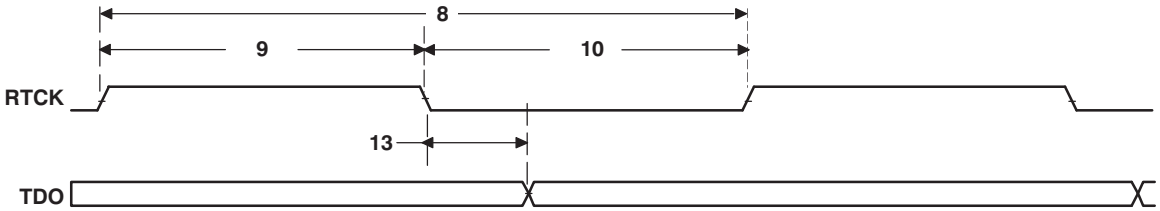

Figure 6-69. JTAG Output Timing

7 Mechanical Data

The following table(s) show the thermal resistance characteristics for the PBGA − ZCE mechanical package.

7.1 Thermal Data for ZCE

The following table shows the thermal resistance characteristics for the PBGA − ZCE mechanical package.

Table 7-1. Thermal Resistance Characteristics (PBGA Package) [ZCE]

NO.			°C/W(1)
1	$R\Theta_{JC}$	Junction-to-case	7.2
2	$R\Theta_{JB}$	Junction-to-board	11.4
3	$R\Theta_{JA}$	Junction-to-free air	27.0
4	Psi_{JT}	Junction-to-package top	0.1
5	Psi_{JB}	Junction-to-board	11.3

(1) The junction-to-case measurement was conducted in a JEDEC defined 2S2P system and will change based on environment as well as application. For more information, see these three EIA/JEDEC standards:
- EIA/JESD51-2, Integrated Circuits Thermal Test Method Environment Conditions - Natural Convection (Still Air)
- EIA/JESD51-3, Low Effective Thermal Conductivity Test Board for Leaded Surface Mount Packages
- JESD51-7, High Effective Thermal Conductivity Test Board for Leaded Surface Mount Packages

7.2 Packaging Information

The following packaging information reflects the most current data available for the designated device(s). This data is subject to change without notice and without revision of this document.

Copyright © 2009–2011, Texas Instruments Incorporated

PACKAGING INFORMATION

Orderable part number	Status (1)	Material type (2)	Package | Pins	Package qty | Carrier	RoHS (3)	Lead finish/ Ball material (4)	MSL rating/ Peak reflow (5)	Op temp (°C)	Part marking (6)
TMS320DM365ZCE21	Active	Production	NFBGA (ZCE) | 338	160 | JEDEC TRAY (5+1)	Yes	SNAGCU	Level-3-260C-168 HR	0 to 85	DM365ZCE21 570
TMS320DM365ZCE21.B	Active	Production	NFBGA (ZCE) | 338	160 | JEDEC TRAY (5+1)	Yes	SNAGCU	Level-3-260C-168 HR	0 to 85	DM365ZCE21 570
TMS320DM365ZCE27	Active	Production	NFBGA (ZCE) | 338	160 | JEDEC TRAY (5+1)	Yes	SNAGCU	Level-3-260C-168 HR	0 to 85	DM365ZCE27 570
TMS320DM365ZCE27.B	Active	Production	NFBGA (ZCE) | 338	160 | JEDEC TRAY (5+1)	Yes	SNAGCU	Level-3-260C-168 HR	0 to 85	DM365ZCE27 570
TMS320DM365ZCE30	Active	Production	NFBGA (ZCE) | 338	160 | JEDEC TRAY (5+1)	Yes	SNAGCU	Level-3-260C-168 HR	0 to 85	DM365ZCE30 570
TMS320DM365ZCE30.B	Active	Production	NFBGA (ZCE) | 338	160 | JEDEC TRAY (5+1)	Yes	SNAGCU	Level-3-260C-168 HR	0 to 85	DM365ZCE30 570
TMS320DM365ZCED30	Active	Production	NFBGA (ZCE) | 338	160 | JEDEC TRAY (5+1)	Yes	SNAGCU	Level-3-260C-168 HR	-40 to 85	DM365ZCED30 570
TMS320DM365ZCED30.B	Active	Production	NFBGA (ZCE) | 338	160 | JEDEC TRAY (5+1)	Yes	SNAGCU	Level-3-260C-168 HR	-40 to 85	DM365ZCED30 570
TMS320DM365ZCEF	Active	Production	NFBGA (ZCE) | 338	160 | JEDEC TRAY (5+1)	Yes	SNAGCU	Level-3-260C-168 HR	0 to 85	DM365ZCE30F 570
TMS320DM365ZCEF.B	Active	Production	NFBGA (ZCE) | 338	160 | JEDEC TRAY (5+1)	Yes	SNAGCU	Level-3-260C-168 HR	0 to 85	DM365ZCE30F 570

(1) **Status:** For more details on status, see our product life cycle.

(2) **Material type:** When designated, preproduction parts are prototypes/experimental devices, and are not yet approved or released for full production. Testing and final process, including without limitation quality assurance, reliability performance testing, and/or process qualification, may not yet be complete, and this item is subject to further changes or possible discontinuation. If available for ordering, purchases will be subject to an additional waiver at checkout, and are intended for early internal evaluation purposes only. These items are sold without warranties of any kind.

(3) **RoHS values:** Yes, No, RoHS Exempt. See the TI RoHS Statement for additional information and value definition.

(4) **Lead finish/Ball material:** Parts may have multiple material finish options. Finish options are separated by a vertical ruled line. Lead finish/Ball material values may wrap to two lines if the finish value exceeds the maximum column width.

(5) **MSL rating/Peak reflow:** The moisture sensitivity level ratings and peak solder (reflow) temperatures. In the event that a part has multiple moisture sensitivity ratings, only the lowest level per JEDEC standards is shown. Refer to the shipping label for the actual reflow temperature that will be used to mount the part to the printed circuit board.

(6) **Part marking:** There may be an additional marking, which relates to the logo, the lot trace code information, or the environmental category of the part.

Multiple part markings will be inside parentheses. Only one part marking contained in parentheses and separated by a "~" will appear on a part. If a line is indented then it is a continuation of the previous line and the two combined represent the entire part marking for that device.

Important Information and Disclaimer: The information provided on this page represents TI's knowledge and belief as of the date that it is provided. TI bases its knowledge and belief on information provided by third parties, and makes no representation or warranty as to the accuracy of such information. Efforts are underway to better integrate information from third parties. TI has taken and continues to take reasonable steps to provide representative and accurate information but may not have conducted destructive testing or chemical analysis on incoming materials and chemicals. TI and TI suppliers consider certain information to be proprietary, and thus CAS numbers and other limited information may not be available for release.

In no event shall TI's liability arising out of such information exceed the total purchase price of the TI part(s) at issue in this document sold by TI to Customer on an annual basis.

TRAY

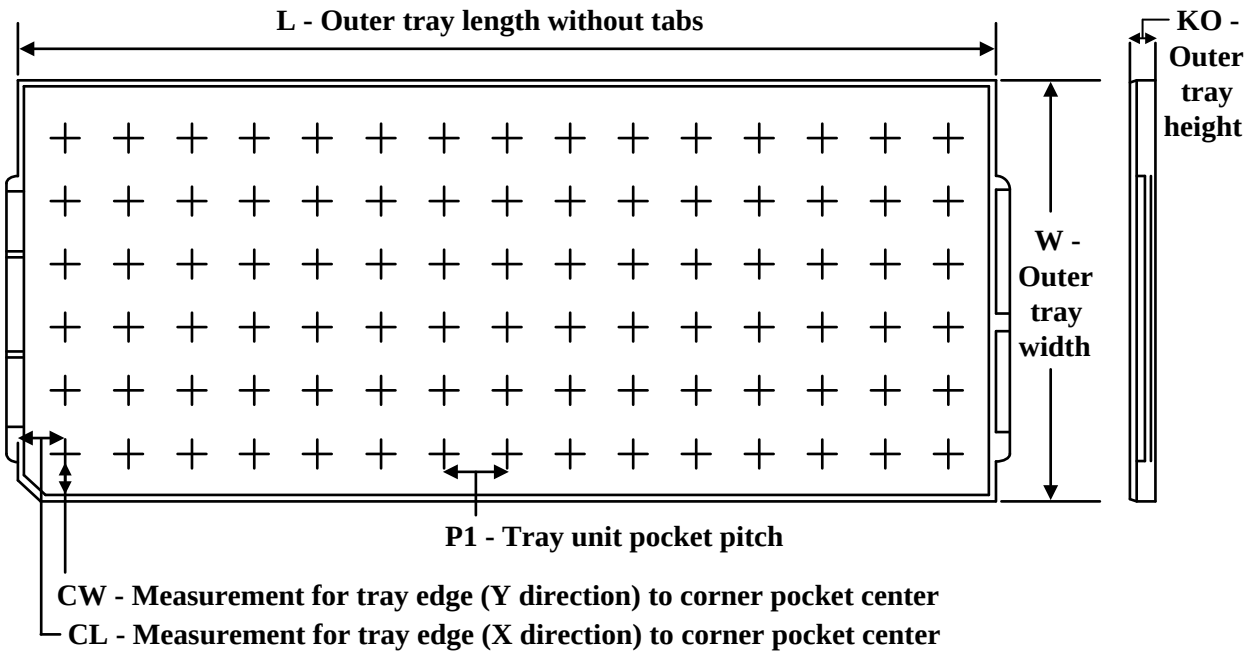

Chamfer on Tray corner indicates Pin 1 orientation of packed units.

*All dimensions are nominal

Device	Package Name	Package Type	Pins	SPQ	Unit array matrix	Max temperature (°C)	L (mm)	W (mm)	K0 (µm)	P1 (mm)	CL (mm)	CW (mm)
TMS320DM365ZCE21	ZCE	NFBGA	338	160	8 x 20	150	315	135.9	7620	15	15	15.45
TMS320DM365ZCE21.B	ZCE	NFBGA	338	160	8 x 20	150	315	135.9	7620	15	15	15.45
TMS320DM365ZCE27	ZCE	NFBGA	338	160	8 x 20	150	315	135.9	7620	15	15	15.45
TMS320DM365ZCE27.B	ZCE	NFBGA	338	160	8 x 20	150	315	135.9	7620	15	15	15.45
TMS320DM365ZCE30	ZCE	NFBGA	338	160	8 x 20	150	315	135.9	7620	15	15	15.45
TMS320DM365ZCE30.B	ZCE	NFBGA	338	160	8 x 20	150	315	135.9	7620	15	15	15.45
TMS320DM365ZCED30	ZCE	NFBGA	338	160	8 x 20	150	315	135.9	7620	15	15	15.45
TMS320DM365ZCED30.B	ZCE	NFBGA	338	160	8 x 20	150	315	135.9	7620	15	15	15.45
TMS320DM365ZCEF	ZCE	NFBGA	338	160	8 x 20	150	315	135.9	7620	15	15	15.45
TMS320DM365ZCEF.B	ZCE	NFBGA	338	160	8 x 20	150	315	135.9	7620	15	15	15.45

ZCE (S–PBGA–N338) PLASTIC BALL GRID ARRAY

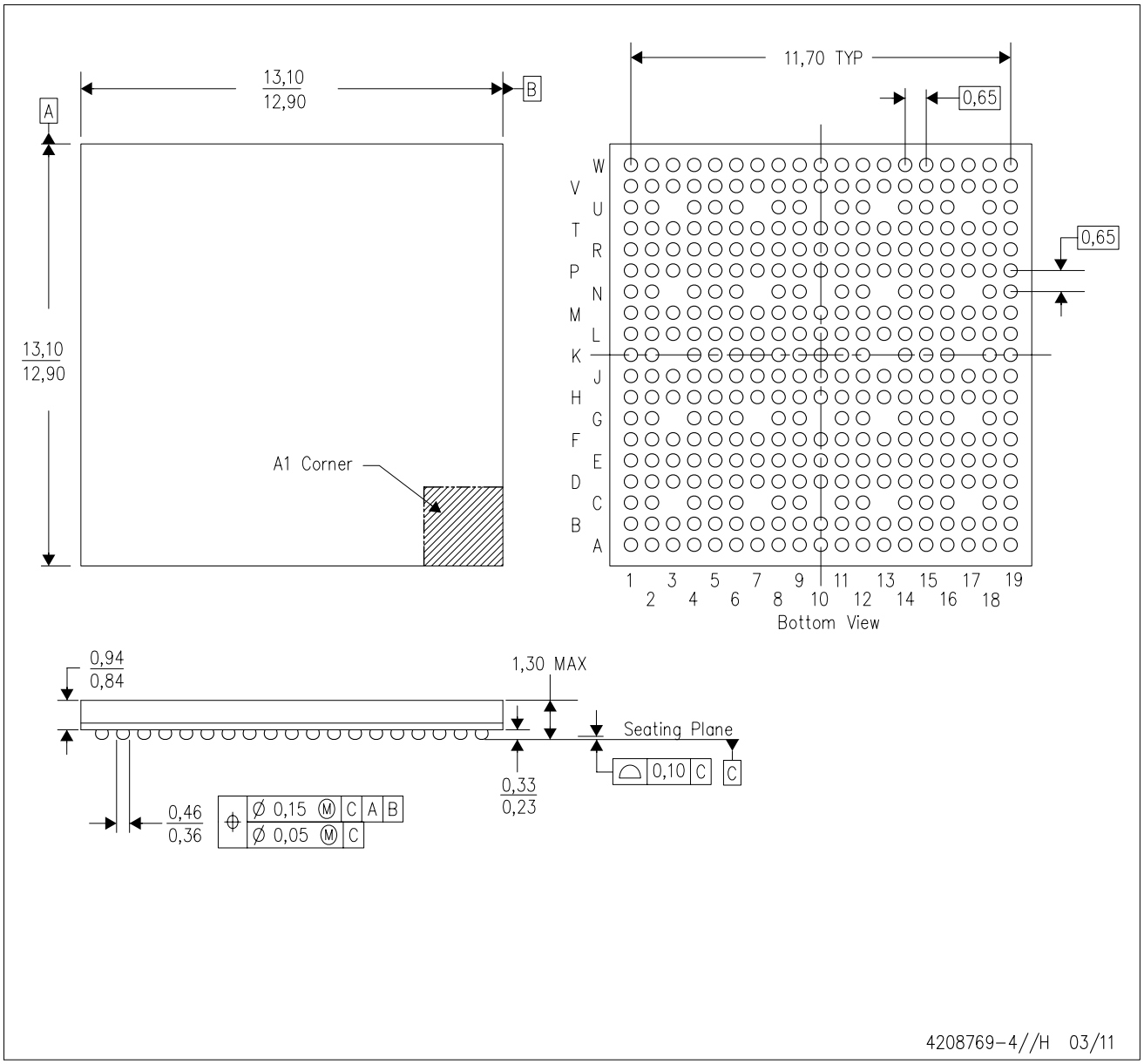

NOTES:
A. All linear dimensions are in millimeters. Dimensioning and tolerancing per ASME Y14.5M–1994.
B. This drawing is subject to change without notice.
C. This is a Pb–free solder ball design.

IMPORTANT NOTICE AND DISCLAIMER

TI PROVIDES TECHNICAL AND RELIABILITY DATA (INCLUDING DATASHEETS), DESIGN RESOURCES (INCLUDING REFERENCE DESIGNS), APPLICATION OR OTHER DESIGN ADVICE, WEB TOOLS, SAFETY INFORMATION, AND OTHER RESOURCES “AS IS” AND WITH ALL FAULTS, AND DISCLAIMS ALL WARRANTIES, EXPRESS AND IMPLIED, INCLUDING WITHOUT LIMITATION ANY IMPLIED WARRANTIES OF MERCHANTABILITY, FITNESS FOR A PARTICULAR PURPOSE OR NON-INFRINGEMENT OF THIRD PARTY INTELLECTUAL PROPERTY RIGHTS.

These resources are intended for skilled developers designing with TI products. You are solely responsible for (1) selecting the appropriate TI products for your application, (2) designing, validating and testing your application, and (3) ensuring your application meets applicable standards, and any other safety, security, regulatory or other requirements.

These resources are subject to change without notice. TI grants you permission to use these resources only for development of an application that uses the TI products described in the resource. Other reproduction and display of these resources is prohibited. No license is granted to any other TI intellectual property right or to any third party intellectual property right. TI disclaims responsibility for, and you fully indemnify TI and its representatives against any claims, damages, costs, losses, and liabilities arising out of your use of these resources.

TI’s products are provided subject to TI’s Terms of Sale, TI’s General Quality Guidelines, or other applicable terms available either on ti.com or provided in conjunction with such TI products. TI’s provision of these resources does not expand or otherwise alter TI’s applicable warranties or warranty disclaimers for TI products. Unless TI explicitly designates a product as custom or customer-specified, TI products are standard, catalog, general purpose devices.

TI objects to and rejects any additional or different terms you may propose.

Copyright © 2026, Texas Instruments Incorporated

Last updated 10/2025