TMS320DM814x DaVinci™ Video Processors

Check for Samples: TMS320DM8148, TMS320DM8147

1 High-Performance System-on-Chip (SoC)

1.1 Features

- High-Performance DaVinci Video Processors
  - Up to 1-GHz ARM® Cortex®-A8 RISC Core
  - Up to 750-MHz C674x™ VLIW DSP
  - Up to 6000 MIPS and 4500 MFLOPS
  - Fully Software-Compatible with C67x+™, C64x+™
- ARM Cortex-A8 Core
  - ARMv7 Architecture
    - In-Order, Dual-Issue, Superscalar Processor Core
    - Neon™ Multimedia Architecture
    - Supports Integer and Floating Point
    - Jazelle® RCT Execution Environment
- ARM Cortex-A8 Memory Architecture
  - 32KB of Instruction and Data Caches
  - 512KB of L2 Cache
  - 64KB of RAM, 48KB of Boot ROM
- TMS320C674x Floating-Point VLIW DSP
  - 64 General-Purpose Registers (32-Bit)
  - Six ALU (32-/40-Bit) Functional Units
    - Supports 32-Bit Integer, SP (IEEE Single Precision/32-Bit) and DP (IEEE Double Precision/64-Bit) Floating Point
    - Supports up to Four SP Adds Per Clock and Four DP Adds Every Two Clocks
    - Supports up to Two Floating-Point (SP or DP) Approximate Reciprocal or Square Root Operations Per Cycle
  - Two Multiply Functional Units
    - Mixed-Precision IEEE Floating-Point Multiply Supported up to:
      - 2 SP x SP → SP Per Clock
      - 2 SP x SP → DP Every Two Clocks
      - 2 SP x DP → DP Every Three Clocks
      - 2 DP x DP → DP Every Four Clocks
    - Fixed-Point Multiply Supports Two 32 x 32 Multiplies, Four 16 x 16-Bit Multiplies Including Complex Multiplies, or Eight 8 x 8-Bit Multiplies per Clock Cycle
- C674x Two-Level Memory Architecture
  - 32KB of L1P RAM/Cache With EDC
  - 32KB of L1D RAM/Cache
  - 256KB of L2 Unified Mapped RAM/Caches With ECC
- System Memory Management Unit (MMU)
  - Maps C674x DSP and EDMA TC Memory Accesses to System Addresses
- 128KB of On-Chip Memory Controller (OCMC) RAM
- Imaging Subsystem (ISS)
  - Camera Sensor Connection
    - Parallel Connection for Raw (up to 16-Bit) and BT.656 or BT.1120 (8- and 16-Bit)
  - Image Sensor Interface (ISIF) for Handling Image and Video Data From the Camera Sensor
  - Resizer
    - Resizing Image and Video From 1/16x to 8x
    - Generating Two Different Resizing Outputs Concurrently
- Programmable High-Definition Video Image Coprocessing (HDVICP v2) Engine
  - Encode, Decode, Transcode Operations
  - H.264, MPEG-2, VC-1, MPEG-4, SP/ASP, JPEG/MJPEG
- Media Controller
  - Controls the HDVPSS, HDVICP2, and ISS
- SGX530 3D Graphics Engine
  - Delivers up to 25 MPoly/sec
  - Universal Scalable Shader Engine
  - Direct3D Mobile, OpenGLES 1.1 and 2.0, OpenVG 1.0, OpenMax API Support
  - Advanced Geometry DMA Driven Operation
  - Programmable HQ Image Anti-Aliasing
- Endianness
  - ARM and DSP Instructions/Data – Little Endian
- HD Video Processing Subsystem (HDVPSS)
  - Two 165-MHz, 2-channel HD Video Capture Modules
    - One 16-/24-Bit Input or Dual 8-Bit SD Input Channels

Please be aware that an important notice concerning availability, standard warranty, and use in critical applications of Texas Instruments semiconductor products and disclaimers thereto appears at the end of this data sheet.
All trademarks are the property of their respective owners.

PRODUCTION DATA information is current as of publication date. Products conform to specifications per the terms of the Texas Instruments standard warranty. Production processing does not necessarily include testing of all parameters.

Copyright © 2011–2013, Texas Instruments Incorporated

- One 8-/16-/24-Bit Input and One 8-Bit Only Input Channels
  - Two 165-MHz HD Video Display Outputs
    - One 16-, 24-, or 30-Bit Output and One 16- or 24-Bit Output
  - Composite or S-Video Analog Output
  - Macrovision® Support Available
  - Digital HDMI 1.3 Transmitter With Integrated PHY
  - Advanced Video Processing Features Such as Scan, Format, Rate Conversion
  - Three Graphics Layers and Compositors
- Dual 32-Bit DDR2/DDR3 SDRAM Interfaces
  - Supports up to DDR2-800 and DDR3-1066
  - Up to Eight x 8 Devices Total 2GB of Total Address Space
  - Dynamic Memory Manager (DMM)
    - Programmable Multi-Zone Memory Mapping and Interleaving
    - Enables Efficient 2D Block Accesses
    - Supports Tiled Objects in 0°, 90°, 180°, or 270° Orientation and Mirroring
    - Optimizes Interlaced Accesses
- General-Purpose Memory Controller (GPMC)
  - 8- or 16-Bit Multiplexed Address and Data Bus
  - 512MB of Address Space Divided Among up to 8 Chip Selects
  - Glueless Interface to NOR Flash, NAND Flash (BCH/Hamming Error Code Detection), SRAM and Pseudo-SRAM
  - Error Locator Module (ELM) Outside of GPMC to Provide Up to 16-Bit or 512-Byte Hardware ECC for NAND
  - Flexible Asynchronous Protocol Control for Interface to FPGA, CPLD, ASICs, and so Forth
- Enhanced Direct Memory Access (EDMA) Controller
  - Four Transfer Controllers
  - 64 Independent DMA Channels and 8 Independent QDMA Channels
- Dual Port Ethernet (10/100/1000 Mbps) With Optional Switch
  - IEEE 802.3 Compliant (3.3-V I/O Only)
  - MII/RMII/GMII/RGMII Media Independent Interfaces
  - Management Data I/O (MDIO) Module
  - Reset Isolation
  - IEEE 1588 Time-Stamping and Industrial Ethernet Protocols
- Dual USB 2.0 Ports With Integrated PHYs
  - USB2.0 High- and Full-Speed Clients
  - USB2.0 High-, Full-, and Low-Speed Hosts, or OTG
  - Supports End Points 0–15
- One PCI Express 2.0 Port With Integrated PHY
  - Single Port With One Lane at 5.0 GT/s
  - Configurable as Root Complex or Endpoint
- Eight 32-Bit General-Purpose Timers (Timer1–8)
- One System Watchdog Timer (WDT0)
- Six Configurable UART/IrDA/CIR Modules
  - UART0 With Modem Control Signals
  - Supports up to 3.6864 Mbps UART0/1/2
  - Supports up to 12 Mbps UART3/4/5
  - SIR, MIR, FIR (4.0 MBAUD), and CIR
- Four Serial Peripheral Interfaces (SPIs) (up to 48 MHz)
  - Each With Four Chip Selects
- Three MMC/SD/SDIO Serial Interfaces (up to 48 MHz)
  - Three Supporting up to 1-, 4-, or 8-Bit Modes
- Dual Controller Area Network (DCAN) Modules
  - CAN Version 2 Part A, B
- Four Inter-Integrated Circuit (I^2C Bus) Ports
- Six Multichannel Audio Serial Ports (McASPs)
  - Dual Ten Serializer Transmit and Receive Ports
  - Quad Four Serializer Transmit and Receive Ports
  - DIT-Capable For S/PDIF (All Ports)
- Multichannel Buffered Serial Port (McBSP)
  - Transmit and Receive Clocks up to 48 MHz
  - Two Clock Zones and Two Serial Data Pins
  - Supports TDM, I2S, and Similar Formats
- Serial ATA (SATA) 3.0 Gbps Controller With Integrated PHY
  - Direct Interface to One Hard Disk Drive
  - Hardware-Assisted Native Command Queuing (NCQ) from up to 32 Entries
  - Supports Port Multiplier and Command-Based Switching
- Real-Time Clock (RTC)
  - One-Time or Periodic Interrupt Generation
- Up to 128 General-Purpose I/O (GPIO) Pins
- One Spin Lock Module with up to 128 Hardware Semaphores
- One Mailbox Module with 12 Mailboxes
- On-Chip ARM ROM Bootloader (RBL)
- Power, Reset, and Clock Management
  - Multiple Independent Core Power Domains
  - Multiple Independent Core Voltage Domains
  - Support for Three Operating Points (OPP100, OPP120, OPP166) per Voltage Domain
  - Clock Enable and Disable Control for Subsystems and Peripherals

 Copyright © 2011–2013, Texas Instruments Incorporated

- **32KB of Embedded Trace Buffer (ETB) and 5-Pin Trace Interface for Debug**
- **IEEE 1149.1 (JTAG) Compatible**
- **684-Pin Pb-Free BGA Package (CYE Suffix), 0.8-mm Ball Pitch With Via Channel Technology to Reduce PCB Cost**
- **45-nm CMOS Technology**
- **1.8- and 3.3-V Dual Voltage Buffers for General I/O**

1.2 Applications

- **HD Video Conferencing - Skype® Endpoints**
- **Video Surveillance DVRs, IP Netcam**
- **Digital Signage**
- **Media Players and Adapters**
- **Mobile Medical Imaging**
- **Network Projectors**
- **Home Audio and Video Equipment**

1.3 Description

TMS320DM814x DaVinci video processors are highly integrated, programmable platforms that leverage the DaVinci processor technology to meet the processing needs of the following applications to name a few:

- HD Video Conferencing - Skype endpoints
- Video Surveillance DVRs
- IP Netcam
- Digital Signage
- Media Players and Adapters
- Mobile Medical Imaging
- Network Projectors
- Home Audio and Video Equipment

The device enables Original-Equipment Manufacturers (OEMs) and Original-Design Manufacturers (ODMs) to quickly bring to market devices featuring robust operating systems support, rich user interfaces, and high processing performance through the maximum flexibility of a fully integrated mixed processor solution. The device also combines programmable video and audio processing with a highly integrated peripheral set.

The TMS320DM814x DaVinci video processors also present OEMs and ODMs with new levels of processor scalability and software reuse. An OEM or ODM that used the AM387x processors in a design and can make a similar product with added features could scale up to the pin-compatible and software-compatible TMS320DM814x processors from TI. The TMS320DM814x DaVinci video processors add a powerful C674x DSP core along with a video encoder and decoder to the hardware on the AM38x. Additionally, OEMs or ODMs that have used the AM387x or DM814x processors and find a need for a faster ARM and DSP core performance could scale up to the software-compatible AM389x or TMS320DM816x devices with higher core speeds.

Programmability is provided by an ARM Cortex-A8 RISC CPU with Neon extension, TI C674x VLIW floating-point DSP core, and high-definition video and imaging coprocessors. The ARM lets developers keep control functions separate from A/V algorithms programmed on the DSP and coprocessors, thus reducing the complexity of the system software. The ARM Cortex-A8 32-Bit RISC Core with Neon floating-point extension includes: 32KB of Instruction cache; 32KB of Data cache; 512KB of L2 Cache; 48KB of Boot ROM; and 64KB of RAM.

The rich peripheral set provides the ability to control external peripheral devices and communicate with external processors. For details on each of the peripherals, see the related sections in this document and the associated peripheral reference guides. The peripheral set includes:

- HD Video Processing Subsystem
- Dual Port Gigabit Ethernet MACs (10/100/1000 Mbps) [Ethernet Switch] with MII/RMII/GMII/RGMII and MDIO interface supporting IEEE 1588 Time-Stamping and Industrial Ethernet Protocols
- Two USB ports with integrated 2.0 PHY
- PCIe x1 GEN2 Compliant interface
- Two 10-serializer McASP audio serial ports (with DIT mode)
- Four quad-serilaizer McASP audio serial ports (with DIT mode)
- One McBSP multichannel buffered serial port
- Six UARTs with IrDA and CIR support
- Four SPI serial interfaces
- Three MMC/SD/SDIO serial interfaces
- Four I^2C master and slave interfaces
- Parallel Camera Interface (CAM)
- Up to 128 General-Purpose I/Os (GPIOs)

 Copyright © 2011–2013, Texas Instruments Incorporated

- Eight 32-bit general-purpose timers
- System watchdog timer
- Dual DDR2, and DDR3 SDRAM interfaces
- Flexible 8- or 16-bit asynchronous memory interface
- Two Controller Area Network (DCAN) modules
- Spin Lock
- Mailbox
- Serial Hard Disk Drive Interface (SATA 300)

The TMS320DM814x DaVinci video processors also include a high-definition video and imaging coprocessor 2 (HDVICP2), and an SGX530 3D graphics engine to off-load many video and imaging processing tasks from the DSP core, making more DSP MIPS available for common video and imaging algorithms. Additionally, it has a complete set of development tools for both the ARM and DSP, which include C compilers, a DSP assembly optimizer to simplify programming and scheduling, and a Microsoft® Windows® debugger interface for visibility into source code execution.

The C674x DSP core is the high-performance floating-point DSP generation in the TMS320C6000 DSP platform and is code-compatible with previous generation C64x Fixed-Point and C67x Floating-Point DSP generation. The C674x Floating-Point DSP processor uses 32KB of L1 program memory with EDC and 32KB of L1 data memory. Up to 32KB of L1P can be configured as program cache. The remaining memory is noncacheable no-wait-state program memory. Up to 32KB of L1D can be configured as data cache. The remaining memory is noncacheable no-wait-state data memory. The DSP has 256KB of L2 RAM with ECC, which can be defined as SRAM, L2 cache, or a combination of both. All C674x L3 and off-chip memory accesses are routed through an MMU.

Copyright © 2011–2013, Texas Instruments Incorporated

1.4 Functional Block Diagram

Figure 1-1 shows the functional block diagram of the device.

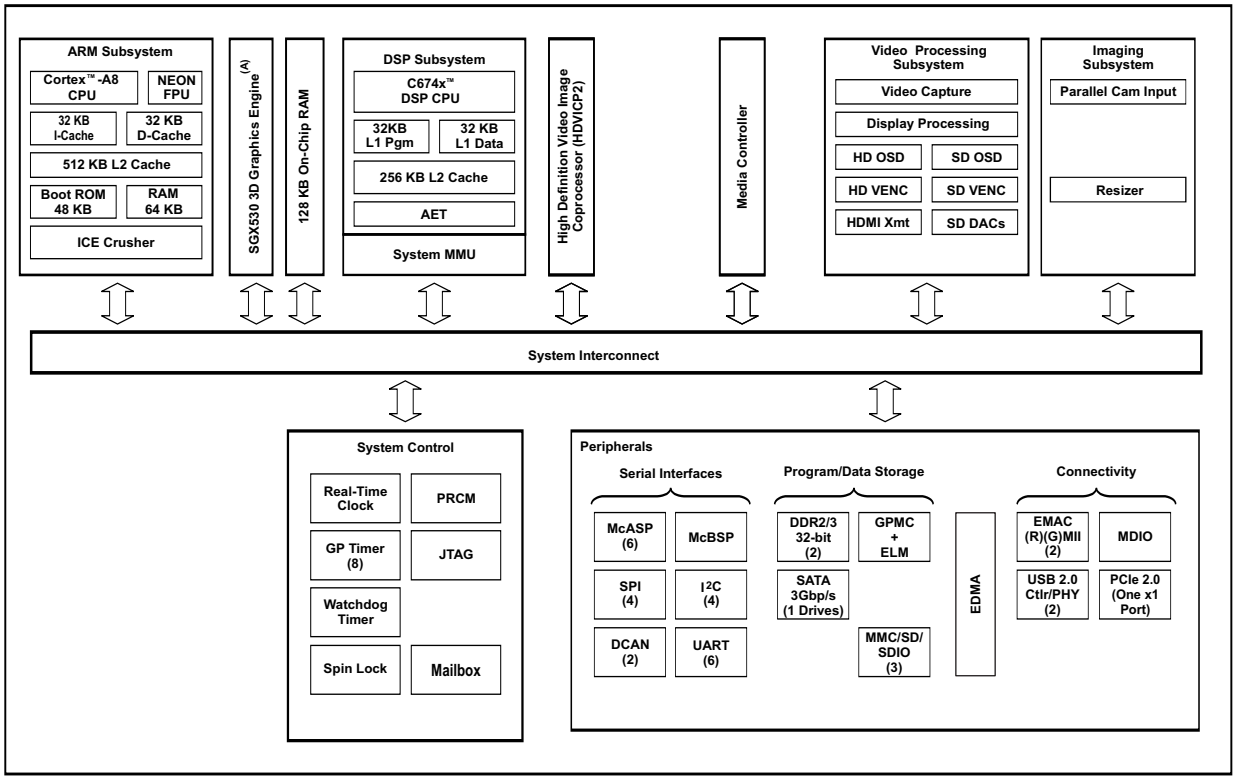

A. SGX530 is only available on the DM8148 device.

Figure 1-1. TMS320DM814x DaVinci video Processors Functional Block Diagram

Copyright © 2011–2013, Texas Instruments Incorporated

1 High-Performance System-on-Chip (SoC) 1
1.1 Features 1
1.2 Applications 3
1.3 Description 4
1.4 Functional Block Diagram 6
Revision History 8
2 Device Overview 12
2.1 Device Comparison 12
2.2 Device Characteristics 12
2.3 Device Compatibility 14
2.4 ARM® Cortex™-A8 Microprocessor Unit (MPU) Subsystem Overview 14
2.5 C674x™ DSP Overview 16
2.6 System Memory Management Unit (MMU) 20
2.7 Media Controller Overview 21
2.8 HDVICP2 Overview 21
2.9 SGX530 Overview 22
2.10 Spinlock Module Overview 22
2.11 Mailbox Module Overview 23
2.12 Memory Map Summary 24
3 Device Pins 34
3.1 Pin Maps 34
3.2 Terminal Functions 43
4 Device Configurations 153
4.1 Control Module Registers 153
4.2 Boot Modes 153
4.3 Pin Multiplexing Control 159
4.4 Handling Unused Pins 170
4.5 DeBugging Considerations 170
5 System Interconnect 172
6 Device Operating Conditions 176
6.1 Absolute Maximum Ratings 176
6.2 Recommended Operating Conditions 177
6.3 Power-On Hours (POH) 178
6.4 Electrical Characteristics Over Recommended Ranges of Supply Voltage and Operating Temperature (Unless Otherwise Noted) 179
7 Power, Reset, Clocking, and Interrupts 181
7.1 Power, Reset and Clock Management (PRCM) Module 181
7.2 Power 181
7.3 Reset 189
7.4 Clocking 197
7.5 Interrupts 214
8 Peripheral Information and Timings 221
8.1 Parameter Information 221
8.2 Recommended Clock and Control Signal Transition Behavior 222
8.3 Controller Area Network Interface (DCAN) 223
8.4 EDMA 225
8.5 Emulation Features and Capability 232
8.6 Ethernet MAC Switch (EMAC SW) 236
8.7 General-Purpose Input/Output (GPIO) 251
8.8 General-Purpose Memory Controller (GPMC) and Error Location Module (ELM) 254
8.9 High-Definition Multimedia Interface (HDMI) 271
8.10 High-Definition Video Processing Subsystem (HDVPSS) 274
8.11 Inter-Integrated Circuit (I2C) 280
8.12 Imaging Subsystem (ISS) 284
8.13 DDR2/DDR3 Memory Controller 287
8.14 Multichannel Audio Serial Port (McASP) 324
8.15 Multichannel Buffered Serial Port (McBSP) 332
8.16 MultiMedia Card/Secure Digital/Secure Digital Input Output (MMC/SD/SDIO) 337
8.17 Peripheral Component Interconnect Express (PCIe) 340
8.18 Serial ATA Controller (SATA) 347
8.19 Serial Peripheral Interface (SPI) 351
8.20 Timers 358
8.21 Universal Asynchronous Receiver/Transmitter (UART) 360
8.22 Universal Serial Bus (USB2.0) 362
9 Device and Documentation Support 370
9.1 Device Support 370
9.2 Documentation Support 371
9.3 Community Resources 371
10 Mechanical 372
10.1 Thermal Data for CYE-04 (Top Hat) 372
10.2 Packaging Information 372

Copyright © 2011–2013, Texas Instruments Incorporated

Revision History

NOTE: Page numbers for previous revisions may differ from page numbers in the current version.

This data manual revision history highlights the technical changes made to the SPRS647D device-specific data manual to make it an SPRS647E revision.

Scope: Applicable updates to the DM814x DaVinci™ Video DMP device family, specifically relating to the TMS320DM8148/47 devices (Silicon Revisions 3.0, 2.1), which are now in the production data (PD) stage of development have been incorporated.

- Updated/Changed Power-Up Sequence
- Updated/Changed Power-Down Sequence
- Low-end OPP combinations no longer supported (CVDD_x < CVDD)
- Added RXACTIVE Function (Bit 18) to PINCTRLx Register Description
- Added Power-On Hours (POH) section
- Added Latch-Up Performance Absolute Maximum Ratings
- DDR2/DDR3 supports up to 533 MHz
- OPP50 is **not** supported
- SmartReflex™ (AVS) is **not** supported
- Deep Sleep Mode is **not** supported
- HDMI HDCP encryption is **not** supported

SEE	ADDITIONS/MODIFICATIONS/DELETIONS
Global	• Replaced all instances of "DSP/EDMA MMU" with "**System MMU**" • Deleted all references to OPP50 and Deep Sleep Mode • Deleted the TMS320DM8146 device along with any device-specific information; no longer supported
Section 1 Features	• Updated/Changed description the HD Video Processing Subsystem (HDVPSS) • Updated/Changed the Dual 32-Bit DDR2/DDR3 SDRAM Interfaces sub-bullet from "Supports up to DDR2-800 and DDR3-**800**" to "Supports up to DDR2-800 and DDR3-**1066**"
Section 2.2 Device Characteristics	Table 2-2, Characteristics of the Processor: • Updated/Changed the HD Video Processing Subsystem (HDVPSS) row • Updated/Changed Core Logic (V), OPP100, OPP120 range from "0.95 V – 1.20 V" to "1.10 V – 1.20 V"
Section 2.12.4.2 L4 Slow Peripheral Memory Map	Table 2-7, L4 Slow Peripheral Memory Map: • Updated/Changed 0x4818_8000–0x4818_BFFF Device Name from "SmartReflex0/1 Peripheral and Support Registers" to **"Reserved"** • Updated/Changed 0x4819_0000–0x4819_3FFF Device Name from "SmartReflex2/3 Peripheral and Support Registers" to **"Reserved"**
Section 3.2.7 General-Purpose Input/Outputs (GPIOs)	Table 3-11, GP1 Terminal Functions: • Added "The ENLVCMOS bit in the MLBP_DAT_IO_CTRL register...." to the pin descriptions for pins GP1[10:7] (V2, V1, W2, and W1 respectively).
Section 3.2.25 Reserved Pins	Table 3-48, Reserved Terminal Functions: • Updated/Changed TYPE for Signal No. Y14 (RSV4) and AC8 (RSV5) from "S" to **"I"**

Copyright © 2011–2013, Texas Instruments Incorporated

SEE	ADDITIONS/MODIFICATIONS/DELETIONS
Section 4 Device Configurations	Section 4.3, Pin Multiplexing Control: • Updated/Changed bit 18 from "RSV" to "RXACTIVE"
	Table 4-11, PINCNTL1 – PINCNTL270 (PINCNTLx) Registers Bit Descriptions: • Updated/Changed the MUXMODE[7:0] Description from "Values other than those ..." to **"A value of zero results ..."** • Updated/Changed bit 18 description to now support RXACTIVE
	Table 4-13, PINCNTLx Registers MUXMODE Functions: • Updated/Changed PINCNTL173 row under 0x20 from "UART2_TXD$^{(M1)}$" to **"UART2_TXD$^{(M0)}$"** • Updated/Changed PINCNTL231 under 0x80 from "GP3[30]$^{(M0)}$" to **"GP3[30]$^{(M1)}$"**
	Section 4.4, Handling Unused Pins: • Added "Unless otherwise noted" to the beginning of, "All supply pins must always ..."
Section 6 Device Operating Conditions	Section 6.1, Absolute Maximum Ratings: • Deleted the "V I/O...(Transient Overshoot/Undershoot)" rows of Input and Output voltage ranges • Added Latch-Up Performance row and Latch-Up footnotes • Updated/Changed ESD-HBM footnote to "Level listed is passing level per ANSI/ESDA/JEDEC J5-001..." • Updated/Changed ESD-CDM footnote to "Level listed is passing level per EIA-JEDEC JESD22-C101E..."
	Section 6.3, Power on Hours (POH): • Added Power-On Hour (POH) section **[New]**
Section 7.2.2.1 Dynamic Voltage Frequency Scaling (DVFS)	Table 7-5, Supported OPP Combinations: • Deleted lower-end OPP combinations supported for ARM, DSP, and HDVICP2
Section 7.2.8.1 Power-Up Sequence	Table 7-6 , Power-Up Sequence Ramping Values: • Added NO. 1 MIN value of "0" ms. • Updated/Changed NO. 1 description to "1.8 V and DVDD_DDR[x] supplies stable..." • Added NO. 13, "CVDD variable supply ramp...." • Updated/Changed Figure 7-1 according to table changes • Deleted 3.3 V Supplies Rising Before 1.8 V Supplies Delta Figure (was Figure 7.2) and associated footnote references • Deleted footnote, "The 3.3 V supplies must be..."
Section 7.2.8.2 Power-Down Sequence	Section 7.2.8.2, Power-Down Sequence: • Added, "Ramping down all supplies at the same time...For proper device..." paragraph
	Table 7-7, Power-Down Sequence Ramping Values: • Updated/Changed "The 1.5-/1.8-V DVDD_DDR[x]..." footnote • Updated/Changed figure reference to Figure 7-3 • Added NO. 14, "CVDD_x variable supplies ramp-down..." • Added associated footnote, "CVDD_x must never exceed CVDD by more than 150mV"
	Figure 7-2, Power-Down Sequence: • Updated/Changed figure according to table changes
	Figure 7-3,1.8 V Supplies Falling Before 3.3 V Supplies Delta: • Added figure **[New]**

SEE	ADDITIONS/MODIFICATIONS/DELETIONS
Section 7.4 Clocking	Section 7.4.1.1, Using the Internal Oscillators: Table 7-11, Requirements for Crystal Circuit on the Device Oscillator (DEVOSC): • Added three conditions and the MAX values to the Crystal Frequency Stability PARAMETER
	Table 7-15, Timing Requirements for DEVOSC_MXI/DEV_CLKIN • Added three conditions and the MAX values to the Frequency Stability PARAMETER
	Section 7.4.3, AUD_CLKINx Input Clocks: • Added section **[New]**
	Section 7.4.4, CLKIN32 Input Clock: • Added "/8" to the TIMER1/2/3/4/5/6/7 bullet
	Section 7.4.7, Input/Output Clocks Electrical Data/Timing: • Added Table 7-17, Timing Requirements for AUD_CLKINx **[New]** • Added Figure 7-14, AUD_CLKINx Timing **[New]**
	Section 7.4.8, PLLs: • Deleted PLL Electrical Data/Timing subsection
Section 7.4.9 SYSCLKs	Table 7-26, Maximum SYSCLK Clock Frequencies: • Added footnote, "The maximum frequencies listed..."
Section 7.4.10 Module Clocks	Table 7-27, Maximum Module Clock Frequencies: • Updated/Changed Media Controller **CLOCK SOURCES** from "PLL_MEDIACTL" to "PLL_MEDIACTL/2" • Updated/Changed Media Controller **MAX FREQUENCY OPP100 (MHz)** value from "400" to "200" • Added footnote, "The maximum frequencies listed..."
Section 8.4 EDMA	Section 8.4.1, EDMA Channel Synchronization Events: • Updated/Changed paragraphs
	Section 8.4.2, EDMA Peripheral Register Descriptions: • Added Table 8-5, EDMA Channel Controller (EDMA TPCC) Control Registers • Added Table 8-6, EDMA Transfer Controller (EDMA TPTC) Control Registers
Section 8.5.3 IEEE 1149.1 JTAG	Table 8-8, JTAG ID Register Table: • Added silicon-revision specific information to the VARIANT bit field
Section 8.6.2.3 EMAC RGMII Electrical Data/Timing	• Updated/Changed all instances of "at DSP" to "at device"
Section 8.10.1 HDVPSS Electrical Data/Timing	Table 8-42, Timing Requirements for HDVPSS Input: • Deleted NO. 7, $t_{t(CLK)}$, Transition time, VIN[x]A_CLK (10%-90%) • Deleted NO. 7, $t_{t(CLK)}$, Transition time, VIN[x]B_CLK (10%-90%)
Section 8.13.4, DDR2/DDR3 Memory Controller Electrical Data/Timing	Table 8-53, Switching Characteristics Over Recommended Operating Conditions for DDR2/DDR3 Memory Controller: • Updated/Changed NO. 1, $t_{c(DDR_CLK)}$, Cycle time, DDR[x]_CLK, **DDR2/DDR3 mode** to **DDR2 mode** • Added additional row to NO.1, $t_{c(DDR_CLK)}$, Cycle time, DDR[x]_CLK: **DDR3 mode**
Section 8.13.4.1 DDR2 Routing Specifications	Section 8.13.4.1.1.1, DDR2 Interface Schematic: • Updated/Changed the sentence from, "... pins by pulling the non-inverted DQS pin..." to **"... DDR[x]_DQS[n] pins to the corresponding..."** • Updated/Changed a sentence from, "... inverted DQS pin..." to "... **$\overline{\text{DDR[x]_DQS[n]}}$ pins...**" • Added sentence, "The DVDD_DDR[x] and VREFSSTL_DDR[x] power..."
Section 8.13.4.1.2 DDR2 CK and ADDR_CTRL Routing	Table 8-63, CK and ADDR_CTRL Routing Specification: • Updated/Changed the "Series terminator,...the DSP" footnote to "Series terminator,..the processor"
Section 8.13.4.2 DDR3 Routing Specifications	Section 8.13.4.2.4, DDR3 Interface Schematic: • Combined 16-Bit and 32-Bit DDR3 Interface subsections • Deleted repeated figure references • Deleted the sentence, "and the unused DQS.....pulled to ground via 1-kΩ resistors." • Added sentence, "The DVDD_DDR[x] and VREFSSTL_DDR[x]..."

Copyright © 2011–2013, Texas Instruments Incorporated

SEE	ADDITIONS/MODIFICATIONS/DELETIONS
Section 8.13.4.2.4.1 Compatible JEDEC DDR3 Devices	Table 8-66, Compatible JEDEC DDR3 Devices (Per Interface): • Updated/Changed the max clock rate in footnote, "DDR3 devices with speed...." from "400" MHz to "533" MHz
Section 8.14.3 McASP (McASP[5:0]) Electrical Data/Timing	Table 8-78, Timing Requirements for McASP: • Updated/Changed **McASP1 Only** ACLKR/X ext out, MIN value for NO. 5, $t_{su(AFSRX-ACLKRX)}$, Setup time, MCA[x]_AFSR/X input valid before MCA[X]_ACLKR/X from "4" to **"2"** ns. • Updated/Changed **McASP1 Only** ACLKR/X ext out, MIN value for NO. 7,$t_{su(AXR-ACLKRX)}$, Setup time, MCA[x]_AXR input valid before MCA[X]_ACLKR/X from "4" to **"2"** ns.
Section 8.15 Multichannel Buffered Serial Port (McBSP)	Table 8-80, McBSP Registers: • Updated/Changed McBSP HEX ADDRESS range from "0x4700 0000 - 0x4700 00C0" to **"0x4700 0100 – 0x4700 01C0"** (DDR_REG to STATUS_REG) • Added McBSP registers in HEX ADDRESS range **"0x4700 0000 – 0x4700 004C"** (REVNB to DMATXWAKE_EN)
Section 9.1.2 Device and Development-Support Tool Nomenclature	Figure 9-1, Device Nomenclature: • Added "D = -40ºC to 90ºC, Industrial Temperature" to the TEMPERATURE RANGE area

2 Device Overview

2.1 Device Comparison

Table 2-1 shows a comparison between devices, highlighting the differences.

Table 2-1. DM814x Device Comparison

FEATURES	DEVICES	
	TMS320DM8148	TMS320DM8147
SGX530	YES (1)	NONE

2.2 Device Characteristics

Table 2-2 provides an overview of the TMS320DM814x DaVinci™ Digital Media Processors, which includes significant features of the device, including the capacity of on-chip RAM, peripherals, and the package type with pin count.

Table 2-2. Characteristics of the Processor

HARDWARE FEATURES		DM814x
Peripherals Not all peripherals pins are available at the same time (for more details, see the Device Configurations section).	HD Video Processing Subsystem (HDVPSS)	1 16-/24-bit HD Capture Port **or** 2 8-bit SD Capture Ports **and** 1 8-bit SD Capture Port **and** 1 16-/24-/30-bit HD Display Port **or** 1 8-/16-/24-bit HD Capture Port **and** 1 16-24-bit HD Display Port **and** 1 HDMI 1.3 Transmitter **and** 2 SD Video DACs
	Imaging Subsystem (ISS)	1 Parallel Camera Input for Raw (up to 16-bit) and BT.656/BT.1120 (8/16-bit)
	DDR2/3 Memory Controller	2 (32-bit Bus Widths)
	GPMC + ELM	Asynchronous (8-/16-bit bus width) RAM, NOR, NAND
	EDMA	64 Independent Channels 8 QDMA Channels
	10/100/1000 Ethernet MAC Switch with Management Data Input/Output (MDIO)	1 (with 2 MII/RMII/GMII/RGMII Interfaces)
	USB 2.0	2 (Supports High- and Full-Speed as a Device and High-, Full-, and Low-Speed as a Host, or OTG)
	PCI Express 2.0	1 Port (1 5.0GT/s lane)
	Timers	8 (32-bit General purpose) ***and*** 1 (System Watchdog)
	UART	6 (with SIR, MIR, FIR, CIR support and RTS/CTS flow control) (UART0 Supports Modem Interface)
	SPI	4 (Supports 4 slave devices)
	MMC/SD/SDIO	1 (1-bit or 4-bit or 8-bit modes) ***and*** 1 (8-bit mode) ***or*** 2 (1-bit or 4-bit modes)

Copyright © 2011–2013, Texas Instruments Incorporated

Table 2-2. Characteristics of the Processor (continued)

HARDWARE FEATURES			DM814x
	I2C		4 (Master/Slave)
	Media Controller		Controls HDVPSS, HDVICP2, and ISS
	McASP		6 (10/10/4/4/4/4 Serializers, Each with Transmit/Receive and DIT capability)
	McBSP		1 (2 Data Pins, Transmit/Receive)
	Controller Area Network (DCAN)		2
	Serial ATA (SATA) 3.0 Gbps		1 (Supports 1 Hard Disk Drive)
	RTC		1
	GPIO		Up to 128 pins
	Parallel Camera Interface (CAM)		1
	Spin Lock Module		1 (up to 128 H/W Semaphores)
	Mailbox Module		1 (with 12 Mailboxes)
On-Chip Memory	Size (Bytes)		1088KB RAM, 48KB ROM
	Organization		**ARM** 32KB I-cache 32KB D-cache 512KB L2 Cache 64KB RAM 48KB Boot ROM
			DSP 32KB L1 Program (L1P)/Cache (up to 32KB) with EDC 32KB L1 Data (L1D)/Cache (up to 32KB) 256KB Unified Mapped RAM/Cache (L2) with ECC
			ADDITIONAL SHARED MEMORY 128KB On-chip RAM
ARM® Cortex™-A8	Main ID Register Variant/Revision		r3p2
CPU ID + CPU Rev ID	Control Status Register (CSR.[31:16])		0x1401
C674x Megamodule Revision	Revision ID Register (MM_REVID[15:0])		0x0000
JTAG BSDL ID	DEVICE_ID Register (address location: 0x4814_0600)		see Section 8.5.3.1, JTAG ID (JTAGID) Register Description
CPU Frequency	MHz		ARM® Cortex™-A8 1000, 720 MHz
			DSP 600 MHz
Cycle Time	ns		ARM® Cortex™ -A8 1.0, 1.39 ns
			DSP 1.66 ns
Voltage	Core Logic (V)	OPP100, OPP120	1.10 V – 1.20 V
		OPP166	1.35 V
	I/O (V)		1.5 V, 1.8 V, 3.3 V
Package	23 x 23 mm [Flip Chip Ball Grid Array (FCBGA)]		684-Pin BGA (CYE) [with Via Channel Technology]
Process Technology	µm		0.045 µm
Product Status(1)	Product Preview (PP), Advance Information (AI), or Production Data (PD)		PD

(1) PRODUCTION DATA information is current as of publication date. Products conform to specifications per the terms of the Texas Instruments standard warranty. Production processing does not necessarily include testing of all parameters.

2.3 Device Compatibility

2.4 ARM® Cortex™-A8 Microprocessor Unit (MPU) Subsystem Overview

The ARM® Cortex™-A8 Subsystem is designed to give the ARM Cortex-A8 Master control of the device. In general, the ARM Cortex-A8 is responsible for configuration and control of the various subsystems, peripherals, and external memories.

The ARM Cortex-A8 Subsystem includes the following features:

- ARM Cortex-A8 RISC processor:
  - ARMv7 ISA plus Thumb2™, JazelleX™, and Media Extensions
  - Neon™ Floating-Point Unit
  - Enhanced Memory Management Unit (MMU)
  - Little Endian
  - 32KB L1 Instruction Cache
  - 32KB L1 Data Cache
  - 512KB L2 Cache
- CoreSight Embedded Trace Module (ETM)
- ARM Cortex-A8 Interrupt Controller (AINTC)
- Embedded PLL Controller (PLL_ARM)
- 64KB Internal RAM
- 48KB Internal Public ROM

Figure 2-1 shows the ARM Cortex-A8 Subsystem for the device.

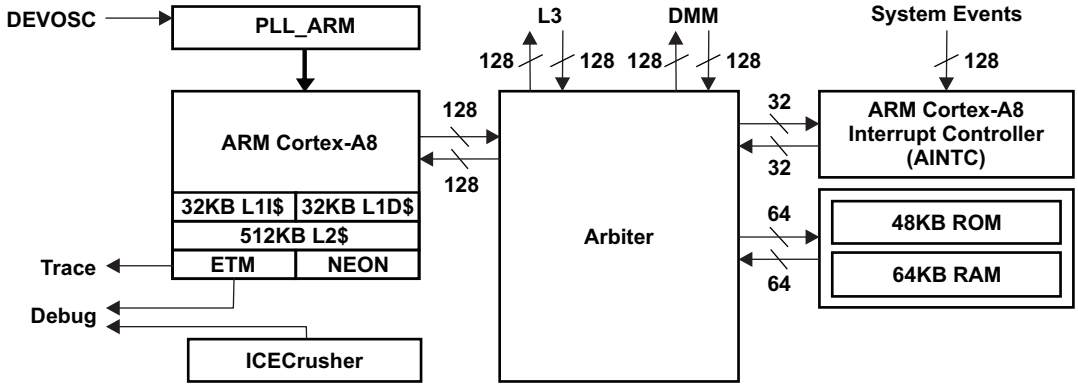

Figure 2-1. ARM Cortex-A8 Subsystem

For more details on the ARM Cortex-A8 Subsystem, see the System MMU section of the *Chip Level Resources* chapter of the *TMS320DM814x DaVinci Digital Media Processors Technical Reference Manual* (Literature Number: SPRUGZ8).

2.4.1 ARM Cortex-A8 RISC Processor

The ARM Cortex-A8 Subsystem integrates the ARM Cortex-A8 processor. The ARM Cortex-A8 processor is a member of ARM Cortex family of general-purpose microprocessors. This processor is targeted at multi-tasking applications where full memory management, high performance, low die size, and low power are all important. The ARM Cortex-A8 processor supports the ARM debug architecture and includes logic to assist in both hardware and software debug. The ARM Cortex-A8 processor has a Harvard architecture and provides a complete high-performance subsystem, including:

- ARM Cortex-A8 Integer Core
- Superscalar ARMv7 Instruction Set

Copyright © 2011–2013, Texas Instruments Incorporated

- Thumb-2 Instruction Set
- Jazelle RCT Acceleration
- CP14 Debug Coprocessor
- CP15 System Control Coprocessor
- NEON™ 64-/128-bit Hybrid SIMD Engine for Multimedia
- Enhanced VFPv3 Floating-Point Coprocessor
- Enhanced Memory Management Unit (MMU)
- Separate Level-1 Instruction and Data Caches
- Integrated Level-2 Cache
- 128-bit Interconnector-to-System Memories and Peripherals
- Embedded Trace Module (ETM).

2.4.2 Embedded Trace Module (ETM)

To support real-time trace, the ARM Cortex-A8 processor provides an interface to enable connection of an embedded trace module (ETM). The ETM consists of two parts:

- The Trace port which provides real-time trace capability for the ARM Cortex-A8.
- Triggering facilities that provide trigger resources, which include address and data comparators, counter, and sequencers.

The ARM Cortex-A8 trace port is not pinned out and is, instead, only connected to the system-level Embedded Trace Buffer (ETB). The ETB has a 32KB buffer memory. ETB enabled debug tools are required to read/interpret the captured trace data.

For more details on the ETM, see Section 8.5.2, *Trace*.

2.4.3 ARM Cortex-A8 Interrupt Controller (AINTC)

The ARM Cortex-A8 subsystem contains an interrupt controller (AINTC) that prioritizes all service requests from the system peripherals and generates either IRQ or FIQ to the ARM Cortex-A8 processor. For more details on the AINTC, see Section 7.5.1, *ARM Cortex-A8 Interrupts*.

Note: For General-Purpose devices, the AINTC does not support the generation of FIQs to the ARM processor.

2.4.4 ARM Cortex-A8 PLL (PLL_ARM)

The ARM Cortex-A8 subsystem contains an embedded PLL Controller (PLL_ARM) for generating the subsystem's clocks from the DEV Clock input. For more details on the PLL_ARM, see Section 7.4, *Clocking*.

2.4.5 ARM MPU Interconnect

The ARM Cortex-A8 processor is connected through the arbiter to both an L3 interconnect port and a DMM port. The DMM port is 128 bits wide and provides the ARM Cortex-A8 direct access to the DDR memories, while the L3 interconnect port is 64 bits wide and provides access to the remaining device modules.

Copyright © 2011–2013, Texas Instruments Incorporated

2.5 C674x™ DSP Overview

The DSP Subsystem includes the following features:

- C674x DSP CPU
- 32KB L1 Program (L1P)/Cache (up to 32KB) with Error Detection Circuitry (EDC)
- 32KB L1 Data (L1D)/Cache (up to 32KB)
- 256KB Unified Mapped RAM/Cache (L2) with Error Correction Circuitry (ECC)
- Direct Connection to the HDVICP2 Host SL2 Port
- Little Endian

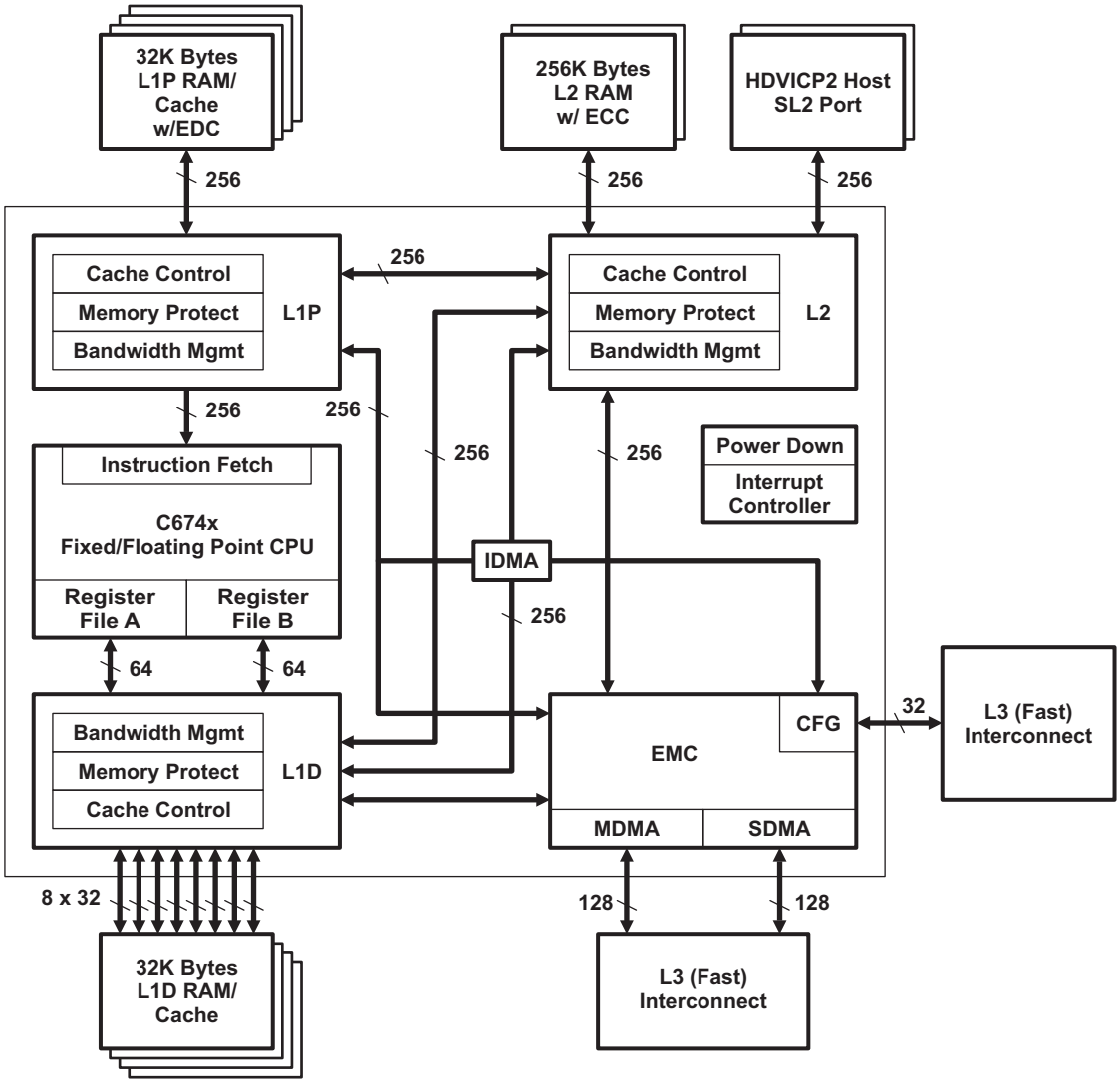

Figure 2-2. C674x Megamodule Block Diagram

Copyright © 2011–2013, Texas Instruments Incorporated

2.5.1 C674x DSP CPU Description

The C674x central processing unit (CPU) consists of eight functional units, two register files, and two data paths as shown in Figure 2-2. The two general-purpose register files (A and B) each contain 32 32-bit registers for a total of 64 registers. The general-purpose registers can be used for data or can be data address pointers. The data types supported include packed 8-bit data, packed 16-bit data, 32-bit data, 40-bit data, and 64-bit data. Values larger than 32 bits, such as 40-bit-long or 64-bit-long values are stored in register pairs, with the 32 LSBs of data placed in an even register and the remaining 8 or 32 MSBs in the next upper register (which is always an odd-numbered register).

The eight functional units (.M1, .L1, .D1, .S1, .M2, .L2, .D2, and .S2) are each capable of executing one instruction every clock cycle. The .M functional units perform all multiply operations. The .S and .L units perform a general set of arithmetic, logical, and branch functions. The .D units primarily load data from memory to the register file and store results from the register file into memory.

The C674x CPU combines the performance of the C64x+ core with the floating-point capabilities of the C67x+ core.

Each C674x .M unit can perform one of the following each clock cycle: one 32 x 32 bit multiply, one 16 x 32 bit multiply, two 16 x 16 bit multiplies, two 16 x 32 bit multiplies, two 16 x 16 bit multiplies with add/subtract capabilities, four 8 x 8 bit multiplies, four 8 x 8 bit multiplies with add operations, and four 16 x 16 multiplies with add/subtract capabilities (including a complex multiply). There is also support for Galois field multiplication for 8-bit and 32-bit data. Many communications algorithms such as FFTs and modems require complex multiplication. The complex multiply (CMPY) instruction takes four 16-bit inputs and produces a 32-bit real and a 32-bit imaginary output. There are also complex multiplies with rounding capability that produces one 32-bit packed output that contain 16-bit real and 16-bit imaginary values. The 32 x 32 bit multiply instructions provide the extended precision necessary for high-precision algorithms on a variety of signed and unsigned 32-bit data types.

The .L or (Arithmetic Logic Unit) now incorporates the ability to do parallel add/subtract operations on a pair of common inputs. Versions of this instruction exist to work on 32-bit data or on pairs of 16-bit data performing dual 16-bit add and subtracts in parallel. There are also saturated forms of these instructions.

The C674x core enhances the .S unit in several ways. On the previous cores, dual 16-bit MIN2 and MAX2 comparisons were only available on the .L units. On the C674x core they are also available on the .S unit which increases the performance of algorithms that do searching and sorting. Finally, to increase data packing and unpacking throughput, the .S unit allows sustained high performance for the quad 8-bit/16-bit and dual 16-bit instructions. Unpack instructions prepare 8-bit data for parallel 16-bit operations. Pack instructions return parallel results to output precision including saturation support.

Other new features include:

- **SPLOOP** - A small instruction buffer in the CPU that aids in creation of software pipelining loops where multiple iterations of a loop are executed in parallel. The SPLOOP buffer reduces the code size associated with software pipelining. Furthermore, loops in the SPLOOP buffer are fully interruptible.
- **Compact Instructions** - The native instruction size for the C6000 devices is 32 bits. Many common instructions such as MPY, AND, OR, ADD, and SUB can be expressed as 16 bits if the C674x compiler can restrict the code to use certain registers in the register file. This compression is performed by the code generation tools.
- **Instruction Set Enhancement** - As noted above, there are new instructions such as 32-bit multiplications, complex multiplications, packing, sorting, bit manipulation, and 32-bit Galois field multiplication.
- **Exceptions Handling** - Intended to aid the programmer in isolating bugs. The C674x CPU is able to detect and respond to exceptions, both from internally detected sources (such as illegal op-codes) and from system events (such as a watchdog time expiration).
- **Privilege** - Defines user and supervisor modes of operation, allowing the operating system to give a basic level of protection to sensitive resources. Local memory is divided into multiple pages, each with read, write, and execute permissions.

Copyright © 2011–2013, Texas Instruments Incorporated

- **Time-Stamp Counter** - Primarily targeted for Real-Time Operating System (RTOS) robustness, a free-running time-stamp counter is implemented in the CPU which is ***not*** sensitive to system stalls.

For more details on the C674x CPU and its enhancements over the C64x architecture, see the following documents:

- *TMS320C674x DSP CPU and Instruction Set Reference Guide* (Literature Number: SPRUFE8)
- *TMS320C674x DSP Megamodule Reference Guide* (Literature Number: SPRUFK5)

Copyright © 2011–2013, Texas Instruments Incorporated

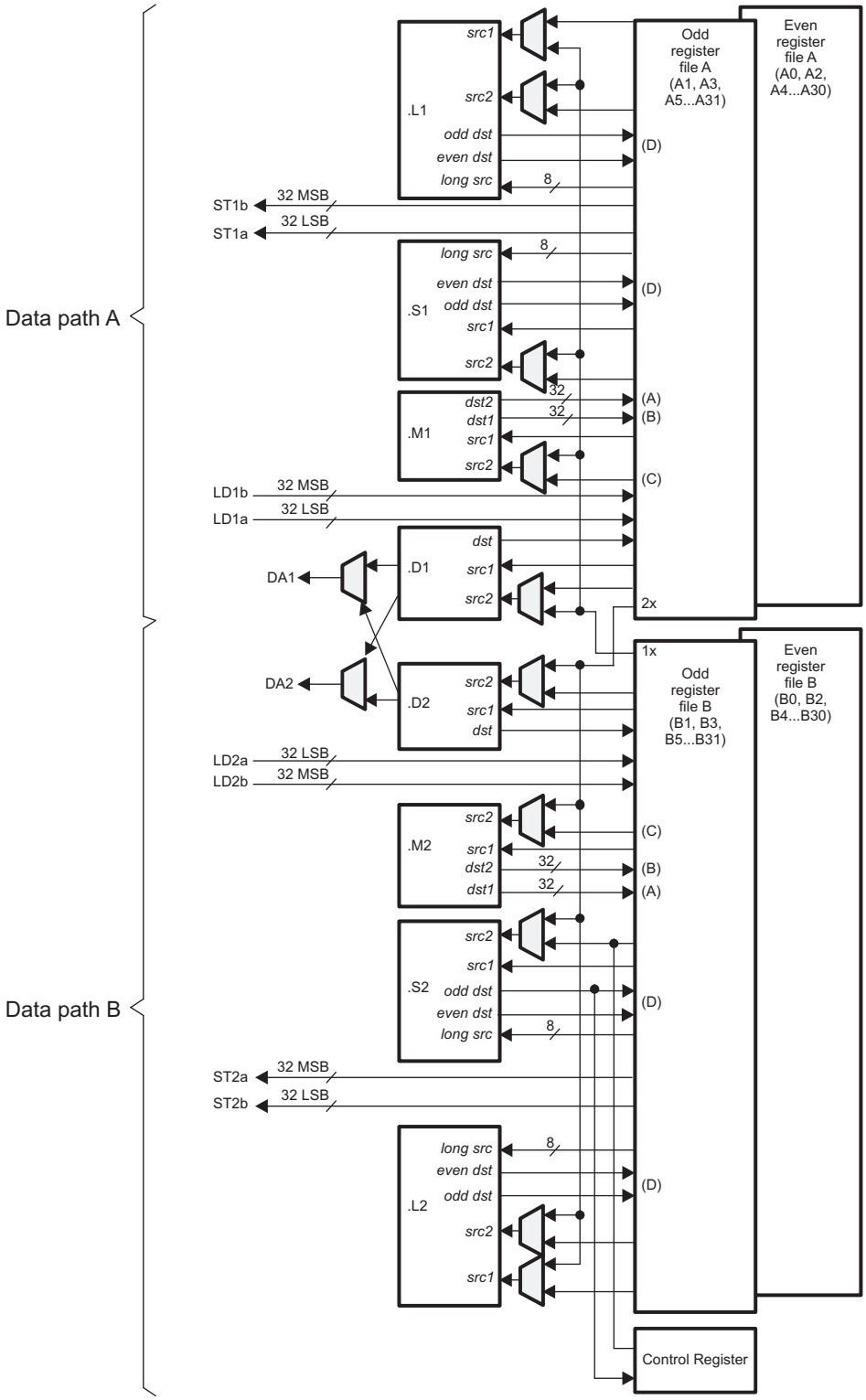

A. .M unit, *dst2* is 32 MSB.
B On .M unit, *dst1* is 32 LSB.
C. On C64x CPU .M unit, *src2* is 32 bits; on C64x+ CPU .M unit, *src2* is 64 bits.
D. On .L and .S units, *odd dst* connects to odd register files and even *dst* connects to even register files

Figure 2-3. TMS320C674x CPU (DSP Core) Data Paths

2.6 System Memory Management Unit (MMU)

All C674x accesses through its MDMA port will be directed through the system MMU module where they are remapped to physical system addresses. This protects the ARM Cortex-A8 memory regions from accidental corruption by C674x code and allows for direct allocation of buffers in user space without the need for translation between ARM and DSP applications.

In addition, accesses by the EDMA TC0 and TC1 may optionally be routed through the system MMU. This allows EDMA Channels 0 and 1 to be used by the DSP to perform transfers using only the known virtual addresses of the associated buffers. The MMU_CFG register in the Control Module is used to enable/disable use of the system MMU by the EDMA TCs.

For more details on the system MMU features, see the system MMU section of the *Chip Level Resources* chapter in the *TMS320DM814x DaVinci Digital Media Processors Technical Reference Manual* (Literature Number: SPRUGZ8).

Copyright © 2011–2013, Texas Instruments Incorporated

2.7 Media Controller Overview

The Media Controller has the responsibility of managing the HDVPSS, HDVICP2, and ISS modules.

For more details on the Media Controller, see the Media Controller Subsystem section of the *Chip Level Resources* chapter of the *TMS320DM814x DaVinci Digital Media Processors Technical Reference Manual* (Literature Number: SPRUGZ8).

2.8 HDVICP2 Overview

The HDVICP2 is a Video Encoder/Decoder hardware accelerator supporting a range of encode, decode, and transcode operations for most major video codec standards. The main video Codec standards supported in hardware are MPEG1/2/4 ASP/SP, H.264 BL/MP/HP, VC-1 SP/MP/AP, RV9/10, AVS-1.0, and ON2 VP6.2/VP7.

The HDVICP2 hardware accelerator is composed of the following elements:

- Motion estimation acceleration engine
- Loop filter acceleration engine
- Sequencer, including its memories and an interrupt controller
- Intra-prediction estimation engine
- Calculation engine
- Motion compensation engine
- Entropy coder/decoder
- Video Direct Memory Access (DMA)
- Synchronization boxes
- Shared L2 controller
- Local interconnect

For more details on the HDVICP2, see the HD Video Coprocessor SubSystem section of the *Chip Level Resources* chapter of the *TMS320DM814x DaVinci Digital Media Processors Technical Reference Manual* (Literature Number: SPRUGZ8).

Copyright © 2011–2013, Texas Instruments Incorporated

2.9 SGX530 Overview

The SGX530 is a vector/3D graphics accelerator for vector and 3-dimensional (3D) graphics applications. The SGX530 graphics accelerator efficiently processes a number of various multimedia data types concurrently:

- Pixel data
- Vertex data
- Video data

This is achieved using a multi-threaded architecture using two levels of scheduling and data partitioning enabling zero overhead task switching.

The SGX530 has the following major features:

- Vector graphics and 3D graphics
- Tile-based architecture
- Universal Scalable Shader Engine (USSE™) - multi-threaded engine incorporating pixel and vertex shader functionality
- Advanced shader feature set - in excess of Microsoft VS3.0, PS3.0, and OpenGL2.0
- Industry standard API support - OpenGL ES 1.1 and 2.0, OpenVG v1.1
- Fine-grained task switching, load balancing, and power management
- Advanced geometry DMA driven operation for minimum CPU interaction
- Programmable high-quality image anti-aliasing
- POWERVR® SGX core MMU for address translation from the core virtual address to the external physical address (up to 4GB address range)
- Fully-virtualized memory addressing for OS operation in a unified memory architecture
- Advanced and standard 2D operations [for example, vector graphics, block level transfers (BLTs), raster operations (ROPs)]

For more details on the SGX530, see the *Chip Level Resources* chapter of the *TMS320DM814x DaVinci Digital Media Processors Technical Reference Manual* (Literature Number: SPRUGZ8).

2.10 Spinlock Module Overview

The Spinlock module provides hardware assistance for synchronizing the processes running on multiple processors in the device:

- ARM Cortex-A8 processor
- C674x DSP
- Media Controller

The Spinlock module implements 128 spinlocks (or hardware semaphores) that provide an efficient way to perform a lock operation of a device resource using a single read-access, avoiding the need for a read-modify-write bus transfer of which the programmable cores are not capable.

For more details on the Spinlock Module, see the Spinlock section of the *Chip Level Resources* chapter of the *TMS320DM814x DaVinci Digital Media Processors Technical Reference Manual* (Literature Number: SPRUGZ8).

 Copyright © 2011–2013, Texas Instruments Incorporated

2.11 Mailbox Module Overview

The device Mailbox module facilitates communication between the ARM Cortex-A8, C674x DSP, and the Media Controller. The device mailbox consists of twelve mailboxes, each supporting a 1-way communication between two of the above processors. The sender sends information to the receiver by writing a message to the mailbox registers. Interrupt signaling is used to notify the receiver that a message has been queued or to notify the sender about an overflow situation.

The Mailbox module supports the following features (see Figure 2-4):

- 12 mailboxes
- Flexible mailbox-to-processor assignment scheme
- Four-message FIFO depth for each message queue
- 32-bit message width
- Message reception and queue-not-full notification using interrupts
- Four interrupts (one to ARM Cortex-A8, one to C674x, and two to Media Controller)

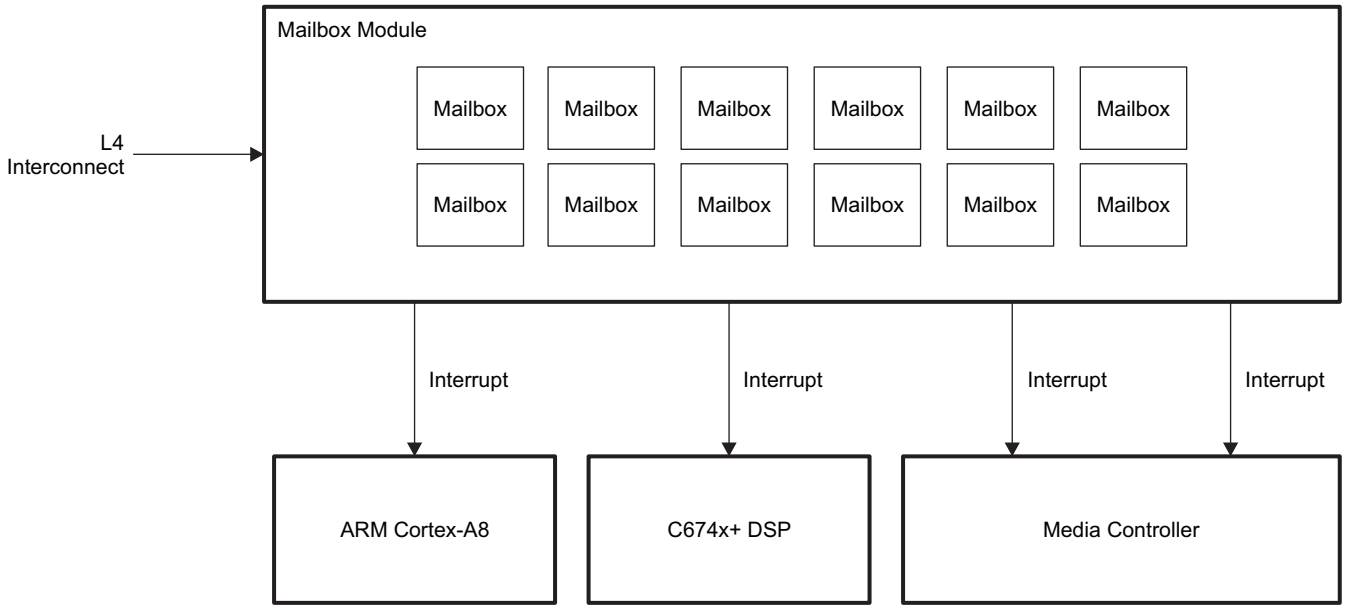

Figure 2-4. Mailbox Module Block Diagram

For more details on the Mailbox Module, see the Mailbox section of the *Chip Level Resources* chapter of the *TMS320DM814x DaVinci Digital Media Processors Technical Reference Manual* (Literature Number: SPRUGZ8).

2.12 Memory Map Summary

The device has multiple on-chip memories associated with its two processors and various subsystems. To help simplify software development a unified memory map is used where possible to maintain a consistent view of device resources across all bus masters.

2.12.1 L3 Memory Map

Table 2-3 shows the L3 memory map for all system masters (including Cortex-A8). Table 2-3 and Table 2-6 show the memory map of the C674x DSP which has limited access to the following peripherals: McASPx, McBSP, UARTx, I2Cx, SPIx, EDMA, GPIO/INT, GPMC, DDRx, EMAC, PCIe, Timers, and USB. Table 2-4 shows the memory map for the C674x DSP.

For more details on the interconnect topology and connectivity across the L3 and L4 interconnects, see Table 7-17, *System Interconnect*.

Table 2-3. L3 Memory Map

START ADDRESS (HEX)	END ADDRESS (HEX)	SIZE	DESCRIPTION
0x0000_0000	0x00FF_FFFF	16MB	GPMC (Reserved for BOOTROM)
0x0100_0000	0x1FFF_FFFF	496MB	GPMC
0x2000_0000	0x2FFF_FFFF	256MB	PCIe
0x3000_0000	0x3FFF_FFFF	256MB	Reserved
0x4000_0000	0x4001_FFFF	128KB	Reserved
0x4002_0000	0x4002_BFFF	48KB	ARM Cortex-A8 ROM (Accessible by ARM Cortex-A8 *only*)
0x4002_C000	0x402E_FFFF	2832KB	Reserved
0x402F_0000	0x402F_03FF	1KB	Reserved
0x402F_0400	0x402F_FFFF	64KB - 1KB	ARM Cortex-A8 RAM (Accessible by ARM Cortex-A8 *only*)
0x4030_0000	0x4031_FFFF	128KB	OCMC SRAM
0x4032_0000	0x407F_FFFF	4992KB	Reserved
0x4080_0000	0x4083_FFFF	256KB	C674x™ L2 RAM
0x4084_0000	0x40DF_FFFF	5888KB	Reserved
0x40E0_0000	0x40E0_7FFF	32KB	C674x L1P Cache/RAM
0x40E0_8000	0x40EF_FFFF	992KB	Reserved
0x40F0_0000	0x40F0_7FFF	32KB	C674x L1D Cache/RAM
0x40F0_8000	0x40FF_FFFF	992KB	Reserved
0x4100_0000	0x41FF_FFFF	16MB	Reserved
0x4200_0000	0x43FF_FFFF	32MB	Reserved
0x4400_0000	0x443F_FFFF	4MB	L3 Fast configuration registers
0x4440_0000	0x447F_FFFF	4MB	L3 Mid configuration registers
0x4480_0000	0x44BF_FFFF	4MB	L3 Slow configuration registers
0x44C0_0000	0x45FF_FFFF	20MB	Reserved
0x4600_0000	0x463F_FFFF	4MB	McASP0 Data Peripheral Registers
0x4640_0000	0x467F_FFFF	4MB	McASP1 Data Peripheral Registers
0x4680_0000	0x46BF_FFFF	4MB	McASP2 Data Peripheral Registers
0x46C0_0000	0x46FF_FFFF	4MB	HDMI
0x4700_0000	0x473F_FFFF	4MB	McBSP
0x4740_0000	0x477F_FFFF	4MB	USB
0x4780_0000	0x4780_FFFF	64KB	Reserved
0x4781_0000	0x4781_1FFF	8KB	MMC/SD/SDIO2 Peripheral Registers
0x4781_2000	0x47BF_FFFF	4MB - 72KB	Reserved

Copyright © 2011–2013, Texas Instruments Incorporated

Table 2-3. L3 Memory Map (continued)

START ADDRESS (HEX)	END ADDRESS (HEX)	SIZE	DESCRIPTION
0x47C0_0000	0x47C0_BFFF	48KB	Reserved
0x47C0_C000	0x47C0_C3FF	1KB	Reserved
0x47C0_C400	0x47C0_C7FF	1KB	DDR0 PHY Registers
0x47C0_C800	0x47C0_CBFF	1KB	DDR1 PHY Registers
0x47C0_CC00	0x47C0_CFFF	1KB	Reserved
0x47C0_D000	0x47FF FFFF	4044KB	Reserved
0x4800_0000	0x48FF_FFFF	16MB	L4 Slow Peripheral Domain (see Table 2-7)
0x4900_0000	0x490F_FFFF	1MB	EDMA TPCC Registers
0x4910_0000	0x497F_FFFF	7MB	Reserved
0x4980_0000	0x498F_FFFF	1MB	EDMA TPTC0 Registers
0x4990_0000	0x499F_FFFF	1MB	EDMA TPTC1 Registers
0x49A0_0000	0x49AF_FFFF	1MB	EDMA TPTC2 Registers
0x49B0_0000	0x49BF_FFFF	1MB	EDMA TPTC3 Registers
0x49C0_0000	0x49FF_FFFF	4MB	Reserved
0x4A00_0000	0x4AFF_FFFF	16MB	L4 Fast Peripheral Domain (see Table 2-6)
0x4B00_0000	0x4BFF_FFFF	16MB	Emulation Subsystem
0x4C00_0000	0x4CFF_FFFF	16MB	DDR0 Registers
0x4D00_0000	0x4DFF_FFFF	16MB	DDR1 Registers
0x4E00_0000	0x4FFF_FFFF	32MB	DDR DMM Registers
0x5000_0000	0x50FF_FFFF	16MB	GPMC Registers
0x5100_0000	0x51FF_FFFF	16MB	PCIE Registers
0x5200_0000	0x54FF_FFFF	48MB	Reserved
0x5500_0000	0x55FF_FFFF	16MB	Media Controller
0x5600_0000	0x56FF_FFFF	16MB	SGX530
0x5700_0000	0x57FF_FFFF	16MB	Reserved
0x5800_0000	0x58FF_FFFF	16MB	HDVICP2 Configuration
0x5900_0000	0x59FF_FFFF	16MB	HDVICP2 SL2
0x5A00_0000	0x5BFF_FFFF	32MB	Reserved
0x5C00_0000	0x5DFF_FFFF	32MB	ISS
0x5E00_0000	0x5FFF_FFFF	32MB	Reserved
0x6000_0000	0x7FFF_FFFF	512MB	DDR DMM TILER Window (see Table 2-8)
0x8000_0000	0xFFFF_FFFF	2GB	DDR
0x1 0000 0000	0x1 FFFF FFFF	4GB	DDR DMM TILER Extended Address Map (ISS and HDVPSS only) [see Table 2-8]

Copyright © 2011–2013, Texas Instruments Incorporated

2.12.2 C674x Memory Map

Table 2-4 shows the memory map for the C674x DSP.

Table 2-4. C674x Memory Map

START ADDRESS (HEX)	END ADDRESS (HEX)	SIZE	DESCRIPTION
0x0000_0000	0x003F_FFFF	4MB	Reserved
0x0040_0000	0x0043_FFFF	256KB	HDVICP2 SL2
0x0044_0000	0x007F_FFFF	3840KB	Reserved
0x0080_0000	0x0083_FFFF	256KB	C674x™ L2 RAM
0x0084_0000	0x00DF_FFFF	5888KB	Reserved
0x00E0_0000	0x00E0_7FFF	32KB	C674x L1P Cache/RAM
0x00E0_8000	0x00EF_FFFF	992KB	Reserved
0x00F0_0000	0x00F0_7FFF	32KB	C674x L1D Cache/RAM
0x00F0_8000	0x017F_FFFF	9184KB	Reserved
0x0180_0000	0x01BF_FFFF	4MB	C674x Internal CFG registers
0x01C0_0000	0x07FF_FFFF	100MB	Reserved
0x0800_0000	0x08FF_FFFF	16MB	L4 Slow Peripheral Domain (see Table 2-7)
0x0900_0000	0x090F_FFFF	1MB	EDMA TPCC Registers
0x0910_0000	0x097F_FFFF	7MB	Reserved
0x0980_0000	0x098F_FFFF	1MB	EDMA TPTC0 Registers
0x0990_0000	0x099F_FFFF	1MB	EDMA TPTC1 Registers
0x09A0_0000	0x09AF_FFFF	1MB	EDMA TPTC2 Registers
0x09B0_0000	0x09BF_FFFF	1MB	EDMA TPTC3 Registers
0x09C0_0000	0x09FF_FFFF	4MB	Reserved
0x0A00_0000	0x0AFF_FFFF	16MB	L4 Fast Peripheral Domain (see Table 2-6)
0x0B00_0000	0x0FFF_FFFF	80MB	Reserved
0x1000_0000	0x10FF_FFFF	16MB	C674x Internal Global Address (1)
0x1100_0000	0xFFFF_FFFF	3824MB	System MMU Mapped L3 Regions (2)

(1) Addresses 0x1000_0000 to 0x10FF_FFFF are mapped to C674x internal addresses 0x0000_0000 to 0x00FF_FFFF.
(2) For more details on the system MMU features, see the System MMU section of the *Chip Level Resources* chapter in the *TMS320DM814x DaVinci Digital Media Processors Technical Reference Manual* (Literature Number: SPRUGZ8).

Copyright © 2011–2013, Texas Instruments Incorporated

2.12.3 C674x Memory Map (Memory Management Unit Bypassed)

Table 2-5 shows the memory map for the C674x DSP when bypassing the Memory Management Unit.

Table 2-5. MMU Bypassed C674x DSP Memory Map

START ADDRESS (HEX)	END ADDRESS (HEX)	SIZE	DESCRIPTION
0x0000_0000	0x007F_FFFF		Reserved
0x0080_0000	0x0083_FFFF	256KB	C674x™ Level 2 (L2) Cache / RAM
0x0084_0000	0x00DF_FFFF		Reserved
0x00E0_0000	0x00E0_7FFF	32KB	C674x Level 1 Program (L1P) Cache/RAM
0x00E0_8000	0x00EF_FFFF		Reserved
0x00F0_0000	0x00F0_7FFF	32KB	C674x Level 1 Data (L1D) Cache and RAM
0x00F0_8000	0x017F_FFFF		Reserved
0x0180_0000	0x01BF_FFFF	4MB	C674x Interrupt Controller and Configuration Registers
0x01C0_0000	0x07FF_FFFF		Reserved
0x0800_0000	0x083F_FFFF	4MB	L4 Slow0 Peripheral Domain (see)
0x0840_0000	0x08FF_FFFF	12MB	L4 Slow1 Peripheral Domain (see)
0x0900_0000	0x090F_FFFF	1MB	EDMA Channel Controller 0 Configuration Registers
0x0910_0000	0x097F_FFFF		Reserved
0x0980_0000	0x098F_FFFF	1MB	EDMA Transfer Controller 0 Configuration Registers
0x0990_0000	0x099F_FFFF	1MB	EDMA Transfer Controller 1 Configuration Registers
0x09A0_0000	0x09AF_FFFF	1MB	EDMA Transfer Controller 2 Configuration Registers
0x09B0_0000	0x09BF_FFFF	1MB	EDMA Transfer Controller 3 Configuration Registers
0x09C0_0000	0x09FF_FFFF		Reserved
0x0A00_0000	0x0AFF_FFFF	16MB	L4 Fast Peripheral Domain (see Table 2-6)
0x0B00_0000	0x0FFF_FFFF		Reserved
0x1000_0000	0x10FF_FFFF	16MB	C674x Internal Global Address (1)
0x1100_0000	0x1FFF+FFFF	240MB	GPMC Slave Address Space
0x2000_0000	0x2FFF_FFFF	256MB	PCI Express (PCI-e) Slave Port
0x3000_0000	0x3FFF_FFFF		Reserved
0x4002_0000	0x400F_FFFF		Reserved (BOOTROM)
0x4010_0000	0x402F_FFFF		Reserved
0x4030_0000	0x4033_FFFF	256KB	On Chip Level 3 (L3) RAM
0x4034_0000	0x43FF_FFFF		Reserved
0x4400_0000	0x443F_FFFF	4MB	Level 3 Fast (L3F) Interconnect Configuration Registers
0x4440_0000	0x447F_FFFF	4MB	Level 3 Mid (L3M) Interconnect Configuration Registers
0x4480_0000	0x44BF_FFFF	4MB	Level 3 Slow (L3S) Interconnect Configuration Registers
0x44C0_0000	0x44FF_FFFF		Reserved
0x4500_0000	0x45FF_FFFF	16MB	Expansion L3 port
0x4600_0000	0x463F_FFFF	4MB	McASP0 Data Port
0x4640_0000	0x467F_FFFF	4MB	McASP1 Data Port
0x4680_0000	0x46BF_FFFF	4MB	McASP2 Data Port
0x46C0_0000	0x46FF_FFFF		Reserved
0x4700_0000	0x473F_FFFF	4MB	McBSP Peripheral Configuration Registers
0x4740_0000	0x477F_FFFF	4MB	USB Subsystem Configuration Registers
0x4780_0000	0x4780_FFFF	64KB	Viterbi Coprocessor 2 Configuration Registers

(1) Addresses 0x1000_0000 to 0x10FF_FFFF are mapped to C674x internal addresses 0x0000_0000 to 0x00FF_FFFF.

Copyright © 2011–2013, Texas Instruments Incorporated

Table 2-5. MMU Bypassed C674x DSP Memory Map (continued)

START ADDRESS (HEX)	END ADDRESS (HEX)	SIZE	DESCRIPTION
0x4781_0000	0x4781_1FFF	8KB	MMC/SD2 Peripheral Configuration Registers
0x4781_2000	0x47FF_FFFF		Reserved
0x4800_0000	0x483F_FFFF	4MB	L4 Slow0 Peripheral Domain (see)
0x4840_0000	0x48FF_FFFF	12MB	L4 Slow1 Peripheral Domain (see)
0x4900_0000	0x490F_FFFF	1MB	EDMA Channel Controller Registers
0x4910_0000	0x497F_FFFF		Reserved
0x4980_0000	0x498F_FFFF	1MB	EDMA Transfer Controller 0 Registers
0x4990_0000	0x499F_FFFF	1MB	EDMA Transfer Controller 1 Registers
0x49A0_0000	0x49AF_FFFF	1MB	EDMA Transfer Controller 2 Registers
0x49B0_0000	0x49BF_FFFF	1MB	EDMA Transfer Controller 3 Registers
0x49C0_0000	0x49FF_FFFF		Reserved
0x4A00_0000	0x4AFF_FFFF	16MB	L4 Fast Peripheral Domain (see Table 2-6)
0x4B00_0000	0x4BFF_FFFF	16MB	Emulation Subsystem
0x4C00_0000	0x4CFF_FFFF	16MB	DDR Configuration Registers
0x4D00_0000	0x4FFF_FFFF		Reserved
0x5000_0000	0x50FF_FFFF	16MB	General Purpose Memory Controller Configuration Registers
0x5100_0000	0x51FF_FFFF	16MB	PCI Express (PCIe) Peripheral Configuration Registers
0x5200_0000	0x523F_FFFF		Reserved
0x5240_0000	0x527F_FFFF	4MB	BitBLT 2D Graphics Engine Configuration Registers
0x5280_0000	0x54BF_FFFF		Reserved
0x54C0_0000	0x54FF_FFFF	4MB	Analog-to-Digital Converter / Touchscreen Controller DMA Port Registers
0x5500_0000	0x55FF_FFFF	16MB	Media Controller Registers (2)
0x5600_0000	0x56FF_FFFF	16MB	SGX530 3D Graphics Engine Configuration Registers
0x5700_0000	0x7FFF_FFFF		Reserved
0x8000_0000	0xFFFF_FFFF	2GB	DDR Addressable Memory Space

(2) This range maps into the 0x5500 0000 - 0x55FF FFFF region of)

Copyright © 2011–2013, Texas Instruments Incorporated

2.12.4 L4 Memory Map

The L4 Fast Peripheral Domain, L4 Slow Peripheral Domain regions of the memory maps above are broken out into Table 2-6 and Table 2-7.

For more details on the interconnect topology and connectivity across the L3 and L4 interconnects, see Table 7-17, *System Interconnect*.

2.12.4.1 L4 Fast Peripheral Memory Map

Table 2-6. L4 Fast Peripheral Memory Map

Cortex-A8 and L3 Masters		C674x DSP		SIZE	DEVICE NAME
START ADDRESS (HEX)	END ADDRESS (HEX)	START ADDRESS (HEX)	END ADDRESS (HEX)		
0x4A00_0000	0x4A00_07FF	0x0A00_0000	0x0A00_07FF	2KB	L4 Fast Configuration - Address/Protection (AP)
0x4A00_0800	0x4A00_0FFF	0x0A00_0800	0x0A00_0FFF	2KB	L4 Fast Configuration - Link Agent (LA)
0x4A00_1000	0x4A00_13FF	0x0A00_1000	0x0A00_13FF	1KB	L4 Fast Configuration - Initiator Port (IP0)
0x4A00_1400	0x4A00_17FF	0x0A00_1400	0x0A00_17FF	1KB	L4 Fast Configuration - Initiator Port (IP1)
0x4A00_1800	0x4A00_1FFF	0x0A00_1800	0x0A00_1FFF	2KB	Reserved
0x4A00_2000	0x4A07_FFFF	0x0A00_2000	0x0A07_FFFF	504KB	Reserved
0x4A08_0000	0x4A0F_FFFF	0x0A08_0000	0x0A0F_FFFF	512KB	Reserved
0x4A10_0000	0x4A10_7FFF	0x0A10_0000	0x0A10_7FFF	32KB	EMAC SW Peripheral Registers
0x4A10_8000	0x4A10_8FFF	0x0A10_8000	0x0A10_8FFF	4KB	EMAC SW Support Registers
0x4A14_0000	0x4A14_FFFF			64KB	SATA Peripheral Registers
0x4A15_0000	0x4A15_0FFF			4KB	SATA Support Registers
0x4A15_1000	0x4A17_FFFF	0x0A15_1000	0x0A17_FFFF	188KB	Reserved
0x4A18_0000	0x4A1A_1FFF	0x0A18_0000	0x0A1A_1FFF	136KB	Reserved
0x4A1A_2000	0x4A1A_3FFF	0x0A1A_2000	0x0A1A_3FFF	8KB	McASP3 Configuration Peripheral Registers
0x4A1A_4000	0x4A1A_4FFF	0x0A1A_4000	0x0A1A_4FFF	4KB	McASP3 Configuration Support Registers
0x4A1A_5000	0x4A1A_5FFF	0x0A1A_5000	0x0A1A_5FFF	4KB	McASP3 Data Peripheral Registers
0x4A1A_6000	0x4A1A_6FFF	0x0A1A_6000	0x0A1A_6FFF	4KB	McASP3 Data Support Registers
0x4A1A_7000	0x4A1A_7FFF	0x0A1A_7000	0x0A1A_7FFF	4KB	Reserved
0x4A1A_8000	0x4A1A_9FFF	0x0A1A_8000	0x0A1A_9FFF	8KB	McASP4 Configuration Peripheral Registers
0x4A1A_A000	0x4A1A_AFFF	0x0A1A_A000	0x0A1A_AFFF	4KB	McASP4 Configuration Support Registers
0x4A1A_B000	0x4A1A_BFFF	0x0A1A_B000	0x0A1A_BFFF	4KB	McASP4 Data Peripheral Registers
0x4A1A_C000	0x4A1A_CFFF	0x0A1A_C000	0x0A1A_CFFF	4KB	McASP4 Data Support Registers
0x4A1A_D000	0x4A1A_DFFF	0x0A1A_D000	0x0A1A_DFFF	4KB	Reserved
0x4A1A_E000	0x4A1A_FFFF	0x0A1A_E000	0x0A1A_FFFF	8KB	McASP5 Configuration Peripheral Registers
0x4A1B_0000	0x4A1B_0FFF	0x0A1B_0000	0x0A1B_0FFF	4KB	McASP5 Configuration Support Registers
0x4A1B_1000	0x4A1B_1FFF	0x0A1B_1000	0x0A1B_1FFF	4KB	McASP5 Data Peripheral Registers
0x4A1B_2000	0x4A1B_2FFF	0x0A1B_2000	0x0A1B_2FFF	4KB	McASP5 Data Support Registers
0x4A1B_3000	0x4A1B_5FFF	0x0A1B_3000	0x0A1B_5FFF	12KB	Reserved
0x4A1B_6000	0x4A1B_6FFF	0x0A1B_6000	0x0A1B_6FFF	4KB	Reserved
0x4A1B_4000	0x4AFF_FFFF	0x0A1B_4000	0x0AFF_FFFF	14632KB	Reserved

Copyright © 2011–2013, Texas Instruments Incorporated

2.12.4.2 L4 Slow Peripheral Memory Map

Table 2-7. L4 Slow Peripheral Memory Map

Cortex-A8 and L3 Masters		C674x DSP		SIZE	DEVICE NAME
START ADDRESS (HEX)	END ADDRESS (HEX)	START ADDRESS (HEX)	END ADDRESS (HEX)		
0x4800_0000	0x4800_07FF	0x0800_0000	0x0800_07FF	2KB	L4 Slow Configuration – Address/Protection (AP)
0x4800_0800	0x4800_0FFF	0x0800_0800	0x0800_0FFF	2KB	L4 Slow Configuration – Link Agent (LA)
0x4800_1000	0x4800_13FF	0x0800_1000	0x0800_13FF	1KB	L4 Slow Configuration – Initiator Port (IP0)
0x4800_1400	0x4800_17FF	0x0800_1400	0x0800_17FF	1KB	L4 Slow Configuration – Initiator Port (IP1)
0x4800_1800	0x4800_1FFF	0x0800_1800	0x0800_1FFF	2KB	Reserved
0x4800_2000	0x4800_7FFF	0x0800_2000	0x0800_7FFF	24KB	Reserved
0x4800_8000	0x4800_8FFF	0x0800_8000	0x0800_8FFF	32KB	Reserved
0x4801_0000	0x4801_0FFF	0x0801_0000	0x0801_0FFF	4KB	System MMU Peripheral Registers
0x4801_1000	0x4801_1FFF	0x0801_1000	0x0801_1FFF	4KB	System MMU Support Registers
0x4801_2000	0x4801_FFFF	0x0801_2000	0x0801_FFFF	56KB	Reserved
0x4802_0000	0x4802_0FFF	0x0802_0000	0x0802_0FFF	4KB	UART0 Peripheral Registers
0x4802_1000	0x4802_1FFF	0x0802_1000	0x0802_1FFF	4KB	UART0 Support Registers
0x4802_2000	0x4802_2FFF	0x0802_2000	0x0802_2FFF	4KB	UART1 Peripheral Registers
0x4802_3000	0x4802_3FFF	0x0802_3000	0x0802_3FFF	4KB	UART1 Support Registers
0x4802_4000	0x4802_4FFF	0x0802_4000	0x0802_4FFF	4KB	UART2 Peripheral Registers
0x4802_5000	0x4802_5FFF	0x0802_5000	0x0802_5FFF	4KB	UART2 Support Registers
0x4802_6000	0x4802_7FFF	0x0802_6000	0x0802_7FFF	8KB	Reserved
0x4802_8000	0x4802_8FFF	0x0802_8000	0x0802_8FFF	4KB	I2C0 Peripheral Registers
0x4802_9000	0x4802_9FFF	0x0802_9000	0x0802_9FFF	4KB	I2C0 Support Registers
0x4802_A000	0x4802_AFFF	0x0802_A000	0x0802_AFFF	4KB	I2C1 Peripheral Registers
0x4802_B000	0x4802_BFFF	0x0802_B000	0x0802_BFFF	4KB	I2C1 Support Registers
0x4802_C000	0x4802_DFFF	0x0802_C000	0x0802_DFFF	8KB	Reserved
0x4802_E000	0x4802_EFFF	0x0802_E000	0x0802_EFFF	4KB	TIMER1 Peripheral Registers
0x4802_F000	0x4802_FFFF	0x0802_F000	0x0802_FFFF	4KB	TIMER1 Support Registers
0x4803_0000	0x4803_0FFF	0x0803_0000	0x0803_0FFF	4KB	SPI0 Peripheral Registers
0x4803_1000	0x4803_1FFF	0x0803_1000	0x0803_1FFF	4KB	SPI0 Support Registers
0x4803_2000	0x4803_2FFF	0x0803_2000	0x0803_2FFF	4KB	GPIO0 Peripheral Registers
0x4803_3000	0x4803_3FFF	0x0803_3000	0x0803_3FFF	4KB	GPIO0 Support Registers
0x4803_4000	0x4803_7FFF	0x0803_4000	0x0803_7FFF	16KB	Reserved
0x4803_8000	0x4803_9FFF	0x0803_8000	0x0803_9FFF	8KB	McASP0 CFG Peripheral Registers
0x4803_A000	0x4803_AFFF	0x0803_A000	0x0803_AFFF	4KB	McASP0 CFG Support Registers
0x4803_B000	0x4803_BFFF	0x0803_B000	0x0803_BFFF	4KB	Reserved
0x4803_C000	0x4803_DFFF	0x0803_C000	0x0803_DFFF	8KB	McASP1 CFG Peripheral Registers
0x4803_E000	0x4803_EFFF	0x0803_E000	0x0803_EFFF	4KB	McASP1 CFG Support Registers
0x4803_F000	0x4803_FFFF	0x0803_F000	0x0803_FFFF	4KB	Reserved
0x4804_0000	0x4804_0FFF	0x0804_0000	0x0804_0FFF	4KB	TIMER2 Peripheral Registers
0x4804_1000	0x4804_1FFF	0x0804_1000	0x0804_1FFF	4KB	TIMER2 Support Registers
0x4804_2000	0x4804_2FFF	0x0804_2000	0x0804_2FFF	4KB	TIMER3 Peripheral Registers
0x4804_3000	0x4804_3FFF	0x0804_3000	0x0804_3FFF	4KB	TIMER3 Support Registers
0x4804_4000	0x4804_4FFF	0x0804_4000	0x0804_4FFF	4KB	TIMER4 Peripheral Registers

Copyright © 2011–2013, Texas Instruments Incorporated

Table 2-7. L4 Slow Peripheral Memory Map (continued)

Cortex-A8 and L3 Masters		C674x DSP		SIZE	DEVICE NAME
START ADDRESS (HEX)	END ADDRESS (HEX)	START ADDRESS (HEX)	END ADDRESS (HEX)		
0x4804_5000	0x4804_5FFF	0x0804_5000	0x0804_5FFF	4KB	TIMER4 Support Registers
0x4804_6000	0x4804_6FFF	0x0804_6000	0x0804_6FFF	4KB	TIMER5 Peripheral Registers
0x4804_7000	0x4804_7FFF	0x0804_7000	0x0804_7FFF	4KB	TIMER5 Support Registers
0x4804_8000	0x4804_8FFF	0x0804_8000	0x0804_8FFF	4KB	TIMER6 Peripheral Registers
0x4804_9000	0x4804_9FFF	0x0804_9000	0x0804_9FFF	4KB	TIMER6 Support Registers
0x4804_A000	0x4804_AFFF	0x0804_A000	0x0804_AFFF	4KB	TIMER7 Peripheral Registers
0x4804_B000	0x4804_BFFF	0x0804_B000	0x0804_BFFF	4KB	TIMER7 Support Registers
0x4804_C000	0x4804_CFFF	0x0804_C000	0x0804_CFFF	4KB	GPIO1 Peripheral Registers
0x4804_D000	0x4804_DFFF	0x0804_D000	0x0804_DFFF	4KB	GPIO1 Support Registers
0x4804_E000	0x4804_FFFF	0x0804_E000	0x0804_FFFF	8KB	Reserved
0x4805_0000	0x4805_1FFF	0x0805_0000	0x0805_1FFF	8KB	McASP2 CFG Peripheral Registers
0x4805_2000	0x4805_2FFF	0x0805_2000	0x0805_2FFF	4KB	McASP2 CFG Support Registers
0x4805_3000	0x4805_FFFF	0x0805_3000	0x0805_FFFF	52KB	Reserved
0x4806_0000	0x4806_FFFF			64KB	MMC/SD/SDIO0 Peripheral Registers
0x4807_0000	0x4807_0FFF			4KB	MMC/SD/SDIO0 Support Registers
0x4807_1000	0x4807_FFFF	0x0807_1000	0x0807_FFFF	60KB	Reserved
0x4808_0000	0x4808_FFFF			64KB	ELM Peripheral Registers
0x4809_0000	0x4809_0FFF			4KB	ELM Support Registers
0x4809_1000	0x4809_FFFF	0x0809_1000	0x0809_FFFF	60KB	Reserved
0x480A_0000	0x480A_FFFF	0x080A_0000	0x080A_FFFF	64KB	Reserved
0x480B_0000	0x480B_0FFF	0x080B_0000	0x080B_0FFF	4KB	Reserved
0x480B_1000	0x480B_FFFF	0x080B_1000	0x080B_FFFF	60KB	Reserved
0x480C_0000	0x480C_0FFF			4KB	RTC Peripheral Registers
0x480C_1000	0x480C_1FFF			4KB	RTC Support Registers
0x480C_2000	0x480C_3FFF	0x080C_2000	0x080C_3FFF	8KB	Reserved
0x480C_4000	0x480C_7FFF	0x080C_4000	0x080C_7FFF	16KB	Reserved
0x480C_8000	0x480C_8FFF	0x080C_8000	0x080C_8FFF	4KB	Mailbox Peripheral Registers
0x480C_9000	0x480C_9FFF	0x080C_9000	0x080C_9FFF	4KB	Mailbox Support Registers
0x480C_A000	0x480C_AFFF	0x080C_A000	0x080C_AFFF	4KB	Spinlock Peripheral Registers
0x480C_B000	0x480C_BFFF	0x080C_B000	0x080C_BFFF	4KB	Spinlock Support Registers
0x480C_C000	0x480F_FFFF	0x080C_C000	0x080F_FFFF	208KB	Reserved
0x4810_0000	0x4811_FFFF			128KB	HDVPSS Peripheral Registers
0x4812_0000	0x4812_0FFF			4KB	HDVPSS Support Registers
0x4812_1000	0x4812_1FFF	0x0812_1000	0x0812_1FFF	4KB	Reserved
0x4812_2000	0x4812_2FFF			4KB	HDMI Peripheral Registers
0x4812_3000	0x4812_3FFF			4KB	HDMI Support Registers
0x4812_4000	0x4813_FFFF	0x0812_4000	0x0813_FFFF	112KB	Reserved
0x4814_0000	0x4815_FFFF	0x0814_0000	0x0815_FFFF	128KB	Control Module Peripheral Registers (C674x DSP Restricted to only exposed peripherals)
0x4816_0000	0x4816_0FFF	0x0816_0000	0x0816_0FFF	4KB	Control Module Support Registers (C674x DSP Restricted to only exposed peripherals)
0x4816_1000	0x4817_FFFF	0x0816_1000	0x0817_FFFF	124KB	Reserved
0x4818_0000	0x4818_2FFF	0x0818_0000	0x0818_2FFF	12KB	PRCM Peripheral Registers (C674x DSP Restricted to only exposed peripherals)

Copyright © 2011–2013, Texas Instruments Incorporated

Table 2-7. L4 Slow Peripheral Memory Map (continued)

Cortex-A8 and L3 Masters		C674x DSP		SIZE	DEVICE NAME
START ADDRESS (HEX)	END ADDRESS (HEX)	START ADDRESS (HEX)	END ADDRESS (HEX)		
0x4818_3000	0x4818_3FFF	0x0818_3000	0x0818_3FFF	4KB	PRCM Support Registers (C674x DSP Restricted to only exposed peripherals)
0x4818_4000	0x4818_7FFF	0x0818_4000	0x0818_7FFF	16KB	Reserved
0X4818_8000	0X4818_BFFF	0x0818_8000	0x0818_BFFF	16KB	Reserved
0x4818_C000	0x4818_CFFF			4KB	OCP Watchpoint Peripheral Registers
0x4818_D000	0x4818_DFFF			4KB	OCP Watchpoint Support Registers
0x4818_E000	0x4818_EFFF	0x0818_E000	0x0818_EFFF	4KB	Reserved
0x4818_F000	0x4818_FFFF	0x0818_F000	0x0818_FFFF	4KB	Reserved
0x4819_0000	0x4819_3FFF	0x0819_0000	0x0819_3FFF	16KB	Reserved
0x4819_4000	0x4819_BFFF	0x0819_4000	0x0819_BFFF	32KB	Reserved
0x4819_C000	0x481F_FFFF	0x0819_C000	0x081F_FFFF	400KB	Reserved
0x4819_C000	0x4819_CFFF	0x0819_C000	0x0819_CFFF	4KB	I2C2 Peripheral Registers
0x4819_D000	0x4819_DFFF	0x0819_D000	0x0819_DFFF	4KB	I2C2 Support Registers
0x4819_E000	0x4819_EFFF	0x0819_E000	0x0819_EFFF	4KB	I2C3 Peripheral Registers
0x4819_F000	0x4819_FFFF	0x0819_F000	0x0819_FFFF	4KB	I2C3 Support Registers
0x481A_0000	0x481A_0FFF	0x081A_0000	0x081A_0FFF	4KB	SPI1 Peripheral Registers
0x481A_1000	0x481A_1FFF	0x081A_1000	0x081A_1FFF	4KB	SPI1 Support Registers
0x481A_2000	0x481A_2FFF	0x081A_2000	0x081A_2FFF	4KB	SPI2 Peripheral Registers
0x481A_3000	0x481A_3FFF	0x081A_3000	0x081A_3FFF	4KB	SPI2 Support Registers
0x481A_4000	0x481A_4FFF	0x081A_4000	0x081A_4FFF	4KB	SPI3 Peripheral Registers
0x481A_5000	0x481A_5FFF	0x081A_5000	0x081A_5FFF	4KB	SPI3 Support Registers
0x481A_6000	0x481A_6FFF	0x081A_6000	0x081A_6FFF	4KB	UART3 Peripheral Registers
0x481A_7000	0x481A_7FFF	0x081A_7000	0x081A_7FFF	4KB	UART3 Support Registers
0x481A_8000	0x481A_8FFF	0x081A_8000	0x081A_8FFF	4KB	UART4 Peripheral Registers
0x481A_9000	0x481A_9FFF	0x081A_9000	0x081A_9FFF	4KB	UART4 Support Registers
0x481A_A000	0x481A_AFFF	0x081A_A000	0x081A_AFFF	4KB	UART5 Peripheral Registers
0x481A_B000	0x481A_BFFF	0x081A_B000	0x081A_BFFF	4KB	UART5 Support Registers
0x481A_C000	0x481A_CFFF	0x081A_C000	0x081A_CFFF	4KB	GPIO2 Peripheral Registers
0x481A_D000	0x481A_DFFF	0x081A_D000	0x081A_DFFF	4KB	GPIO2 Support Registers
0x481A_E000	0x481A_EFFF	0x081A_E000	0x081A_EFFF	4KB	GPIO3 Peripheral Registers
0x481A_F000	0x481A_FFFF	0x081A_F000	0x081A_FFFF	4KB	GPIO3 Support Registers
0x481B_0000	0x481B_FFFF	0x081B_0000	0x081B_FFFF	64KB	Reserved
0x481C_0000	0x481C_0FFF	0x081C_0000	0x081C_0FFF	4KB	Reserved
0x481C_1000	0x481C_1FFF	0x081C_1000	0x081C_1FFF	4KB	TIMER8 Peripheral Registers
0x481C_2000	0x481C_2FFF	0x081C_2000	0x081C_2FFF	4KB	TIMER8 Support Registers
0x481C_3000	0x481C_3FFF			4KB	SYNCTIMER32K Peripheral Registers
0x481C_4000	0x481C_4FFF			4KB	SYNCTIMER32K Support Registers
0x481C_5000	0x481C_5FFF			4KB	PLLSS Peripheral Registers
0x481C_6000	0x481C_6FFF			4KB	PLLSS
0x481C_7000	0x481C_7FFF			4KB	WDT0 Peripheral Registers
0x481C_8000	0x481C_8FFF			4KB	WDT0 Support Registers
0x481C_9000	0x481C_9FFF	0x081C_9000	0x081C_9FFF	8KB	Reserved
0x481C_A000	0x481C_BFFF	0x081C_A000	0x081C_BFFF	8KB	Reserved
0x481C_C000	0x481C_DFFF			8KB	DCAN0 Peripheral Registers

Copyright © 2011–2013, Texas Instruments Incorporated

Table 2-7. L4 Slow Peripheral Memory Map (continued)

Cortex-A8 and L3 Masters		C674x DSP		SIZE	DEVICE NAME
START ADDRESS (HEX)	END ADDRESS (HEX)	START ADDRESS (HEX)	END ADDRESS (HEX)		
0x481C_E000	0x481C_FFFF			8KB	DCAN0 Support Registers
0x481D_0000	0x481D_1FFF			8KB	DCAN1 Peripheral Registers
0x481D_2000	0x481D_3FFF			8KB	DCAN1 Support Registers
0x481D_4000	0x481D_5FFF	0x081D_4000	0x081D_5FFF	8KB	Reserved
0x481D_6000	0x481D_6FFF	0x081D_6000	0x081D_6FFF	4KB	Reserved
0x481D_7000	0x481D_7FFF	0x081D_7000	0x081D_7FFF	4KB	Reserved
0x481D_8000	0x481E_7FFF			64KB	MMC/SD/SDIO1 Peripheral Registers
0x481E_8000	0x481E_8FFF			4KB	MMC/SD/SDIO1 Support Registers
0x481E_9000	0x481F_FFFF	0x081E_9000	0x081F_FFFF	52KB	Reserved
0x4820_0000	0x4820_0FFF			4KB	Interrupt controller (1)
0x4820_1000	0x4823_FFFF	0x0820_1000	0x0823_FFFF	252KB	Reserved (1)
0x4824_0000	0x4824_0FFF			4KB	MPUSS config register (1)
0x4824_1000	0x4827_FFFF	0x0824_1000	0x0827_FFFF	252KB	Reserved (1)
0x4828_0000	0x4828_0FFF			4KB	Reserved (1)
0x4828_1000	0x482F_FFFF	0x0828_1000	0x082F_FFFF	508KB	Reserved (1)
0x4830_0000	0x48FF_FFFF	0x0830_0000	0x08FF_FFFF	13MB	Reserved

(1) These regions decoded internally by the Cortex™-A8 Subsystem and are not physically part of the L4 Slow. They are included here only for reference when considering the Cortex™-A8 Memory Map. For Masters other than the Cortex-A8 these regions are reserved.

2.12.5 DDR DMM TILER Extended Addressing Map

The TILER includes an additional 4-GBytes of addressing range, enabled by a 33rd address bit, to access the frame buffer in rotated and mirrored views. shows the details of the TILER Extended Address Mapping. This entirety of this additional range is only accessible to the HDVPSS and ISS subsystems. However, other masters can access any one single view through the 512-MB TILER region in the base 4GByte address memory map.

Table 2-8. DDR DMM TILER Extended Address Mapping

BLOCK NAME	START ADDRESS (HEX)	END ADDRESS (HEX)	SIZE	DESCRIPTION
TILER View 0	0x1 0000_0000	0x1 1FFF_FFFF	512MB	Natural 0° View
TILER View 1	0x1 2000_0000	0x1 3FFF_FFFF	512MB	0° with Vertical Mirror View
TILER View 2	0x1 4000_0000	0x1 5FFF_FFFF	512MB	0° with Horizontal Mirror View
TILER View 3	0x1 6000_0000	0x1 7FFF_FFFF	512MB	180° View
TILER View 4	0x1 8000_0000	0x1 9FFF_FFFF	512MB	90° with Vertical Mirror View
TILER View 5	0x1 A000_0000	0x1 BFFF_FFFF	512MB	270° View
TILER View 6	0x1 C000_0000	0x1 DFFF_FFFF	512MB	90° View
TILER View 7	0x1 E000_0000	0x1 FFFF_FFFF	512MB	90° with Horizontal Mirror View

Copyright © 2011–2013, Texas Instruments Incorporated

3 Device Pins

3.1 Pin Maps

Figure 3-1 through Figure 3-8 show the bottom view of the package pin assignments in eight pin maps (A, B, C, D, E, F, G, and H).

Copyright © 2011–2013, Texas Instruments Incorporated

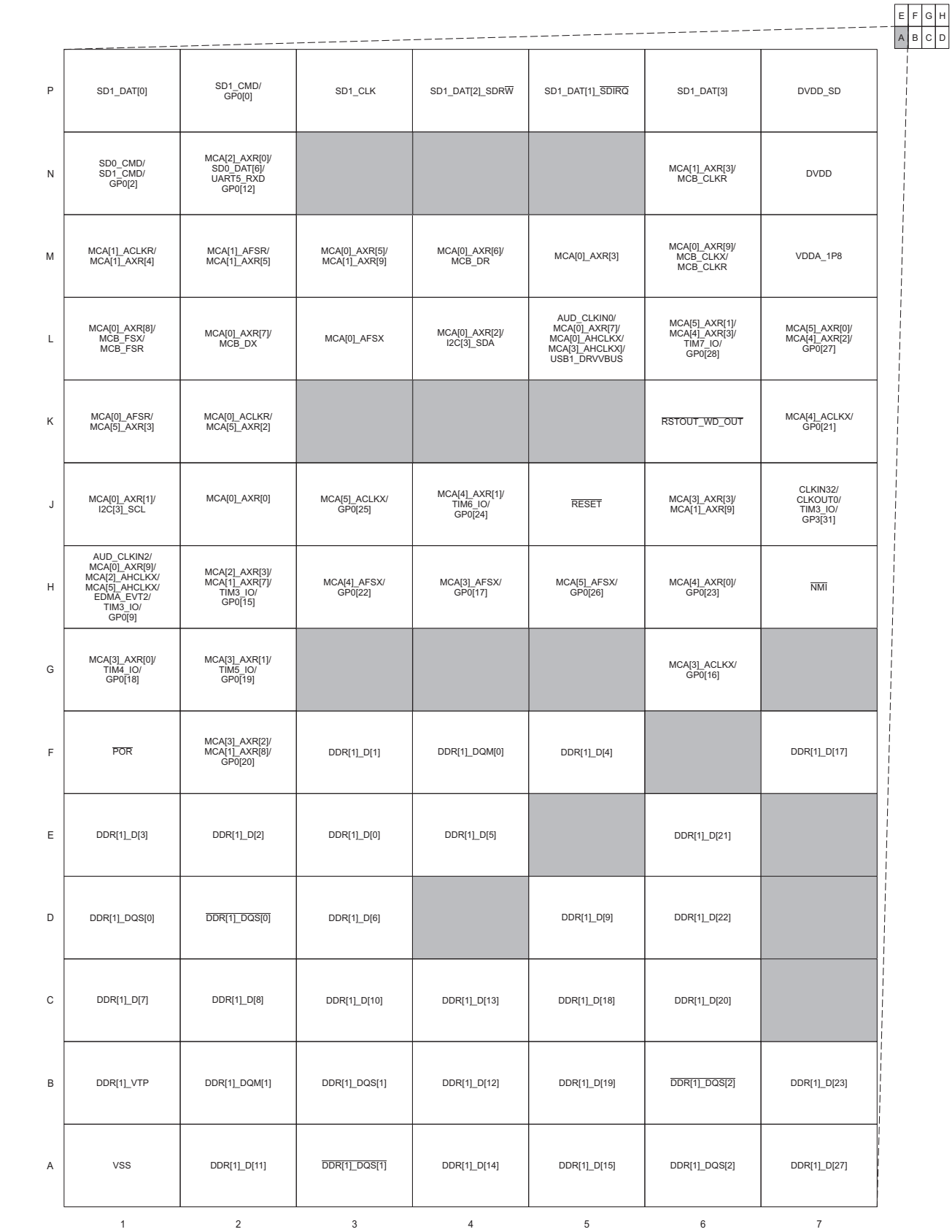

Figure 3-1. Pin Map A

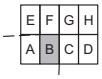

	8	9	10	11	12	13	14
P	DVDD	DVDD_SD	LDOCAP_DSP	VDDA_DSPPLL_1P8	CVDD	VSS	CVDD
N	VSS	CVDD_DSP	LDOCAP_HDVICP	LDOCAP_HDVICPRAM	VSS	CVDD_HDVICP	CVDD_HDVICP
M	DVDD	VSS	CVDD_DSP	LDOCAP_DSPRAM	CVDD_DSP	CVDD_HDVICP	CVDD_HDVICP
L	VSS	CVDD_DSP	CVDD_DSP	CVDD_DSP	CVDD_DSP	VSS	CVDD_HDVICP
K		CVDD	CVDD_DSP	VSS	CVDD	VSS	VSS
J			DVDD_DDR[1]	DVDD_DDR[1]	VSS	DVDD_DDR[1]	VSS
H	DDR[1]_D[16]	DDR[1]_D[25]	DDR[1]_ODT[0]	DDR[1]_CKE	DVDD_DDR[1]	DVDD_DDR[1]	DVDD_DDR[1]
G	DDR[1]_DQM[2]	DDR[1]_DQM[3]	DDR[1]_RST	$\overline{\text{DDR[1]_CS[1]}}$	$\overline{\text{DDR[1]_CS[0]}}$	DVDD_DDR[1]	VREFSSTL_DDR[1]
F	DDR[1]_D[26]	DDR[1]_D[24]	DDR[1]_A[1]	DDR[1]_ODT[1]	DDR[1]_A[10]	$\overline{\text{DDR[1]_CAS}}$	DDR[1]_BA[0]
E	DVDD_DDR[1]	DVDD_DDR[1]		DDR[1]_A[13]	$\overline{\text{DDR[1]_WE}}$		DDR[1]_A[8]
D	DDR[1]_D[29]	VSS		DDR[1]_A[14]	DDR[1]_BA[2]		DDR[1]_A[6]
C	DDR[1]_D[30]	DDR[1]_D[28]		DDR[1]_A[2]	$\overline{\text{DDR[1]_RAS}}$		DDR[1]_A[9]
B	DDR[1]_DQS[3]	DDR[1]_D[31]	DDR[1]_A[12]	DDR[1]_A[0]	DDR[1]_A[5]	DDR[1]_CLK	DDR[1]_A[4]
A	$\overline{\text{DDR[1]_DQS[3]}}$	DDR[1]_A[7]	DDR[1]_BA[1]	DDR[1]_A[11]	VSS	$\overline{\text{DDR[1]_CLK}}$	DDR[1]_A[3]

Figure 3-2. Pin Map B

Copyright © 2011–2013, Texas Instruments Incorporated

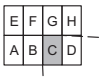

VSS	CVDD	VSS	LDOCAP_RAM0	VSS	DVDD_GPMCB	VSS	P
VSS	VSS	CVDD	VDDA_L3PLL_1P8	CVDD	VSS	VSS	N
VSS	CVDD	VSS	CVDD	VSS	DVDD_GPMC	VSS	M
CVDD	VSS	CVDD	LDOCAP_RAM2	CVDD	VDDA_1P8	DVDD_GPMC	L
VSS	VSS	VSS	CVDD	VSS	DVDD_GPMC		K
DVDD_DDR[0]	DVDD_DDR[0]	DVDD_DDR[0]	DVDD_DDR[0]	VSS			J
VDDA_DDRPLL_1P8	DVDD_DDR[0]	DVDD_DDR[0]	DDR[0]_CKE	DDR[0]_ODT[1]	DDR[0]_D[24]	DDR[0]_D[18]	H
VREFSSTL_DDR[0]	DVDD_DDR[0]	$\overline{\text{DDR[0]_CS[1]}}$	DDR[0]_ODT[0]	DDR[0]_RST	DDR[0]_D[26]	DDR[0]_D[19]	G
DDR[0]_BA[0]	DDR[0]_A[14]	DDR[0]_A[13]	$\overline{\text{DDR[0]_CS[0]}}$	DDR[0]_A[1]	DDR[0]_DQM[3]	DDR[0]_D[25]	F
DDR[0]_A[3]		DDR[0]_A[12]	DDR[0]_A[7]		DVDD_DDR[0]	DVDD_DDR[0]	E
DDR[0]_A[4]		DDR[0]_A[11]	DDR[0]_A[2]		VSS	DDR[0]_D[30]	D
DDR[0]_A[9]		$\overline{\text{DDR[0]_WE}}$	$\overline{\text{DDR[0]_CAS}}$		DDR[0]_D[28]	DDR[0]_D[29]	C
DDR[0]_A[8]	DDR[0]_CLK	DDR[0]_A[5]	$\overline{\text{DDR[0]_RAS}}$	DDR[0]_A[0]	DDR[0]_D[31]	DDR[0]_DQS[3]	B
DDR[0]_A[6]	$\overline{\text{DDR[0]_CLK}}$	VSS	DDR[0]_BA[2]	DDR[0]_A[10]	DDR[0]_BA[1]	$\overline{\text{DDR[0]_DQS[3]}}$	A
15	16	17	18	19	20	21	

Figure 3-3. Pin Map C

E	F	G	H
A	B	C	D

SD2_DAT[5]/ GPMC_A[26]/ GPMC_A[22]/ TIM6_IO/ GP1[21]	EMAC[0]_MRXD[1]/ EMAC[0]_RGRXD[0]/ VIN[1]B_D[6]/ EMAC[0]_RMTXD[1]/ GP3[29]	MDIO/ GP1[12]	GPMC_CS[4]/ SD2_CMD/ GP1[8]	GPMC_CS[3]/ VIN[1]B_CLK/ SPI[2]_SCS[0]/ GP1[26]	RSV13	RSV12	P
VSS	SD2_DAT[6]/ GPMC_A[25]/ GPMC_A[21]/ UART2_TXD/ GP1[20]				RSV11	RSV10	N
VDDA_1P8	SD2_CLK/ GP1[15]	SD2_DAT[1]_SDIRQ/ GPMC_A[3]/ GP1[13]	GPMC_CS[2]/ GPMC_A[24]/ GP1[25]	GPMC_ADV_ALE/ GPMC_CS[6]/ TIM5_IO/ GP1[28]	RSV8	RSV9	M
VSS	EMAC[0]_MCOL/ EMAC[0]_RGRXCTL/ VIN[1]B_D[1]/ EMAC[0]_RMRXD[0]/ GP3[24]	EMAC[0]_MTCLK/ EMAC[0]_RGRXC/ VIN[1]B_D[0]/ SPI[3]_SCS[3]/ I2C[2]_SDA/ GP3[23]	SD2_DAT[7]/ GPMC_A[24]/ GPMC_A[20]/ UART2_RXD/ GP1[19]	SD2_DAT[0]/ GPMC_A[4]/ GP1[14]	RSV6	RSV7	L
EMAC[0]_MRXDV/ EMAC[1]_RGRXD[1]/ GPMC_A[5]/ SPI[2]_SCLK	EMAC[0]_GMTCLK/ EMAC[1]_RGRXC/ GPMC_A[6]/ SPI[2]_D[1]				SD2_DAT[2]_SDRW/ GPMC_A[2]/ GP2[6]	GPMC_CS[1]/ GPMC_A[25]/ GP1[24]	K
EMAC[0]_MTXD[6]/ EMAC[1]_RGRXD[0]/ EMAC[1]_RMTXD[0]/ GPMC_A[13]/ UART1_TXD	EMAC[0]_MTXEN/ EMAC[1]_RGRXD[2]/ EMAC[1]_RMTXEN/ GPMC_A[15]/ UART1_RTS	EMAC[0]_MTXD[0]/ EMAC[1]_RGRXD[3]/ GPMC_A[7]/ SPI[2]_D[0]	EMAC[0]_MRXD[3]/ EMAC[1]_RGRXCTL/ GPMC_A[27]/ GPMC_A[26]/ GPMC_A[0]/ UART5_RXD	EMAC[0]_MRXER/ EMAC[0]_RGTXCTL/ VIN[1]B_D[3]/ EMAC[0]_RMRXER/ GP3[26]	EMAC_RMREFCLK/ TIM2_IO/ GP1[10]	SD2_DAT[3]/ GPMC_A[1]/ GP2[5]	J
EMAC[0]_MTXD[2]/ EMAC[1]_RGTXCTL/ EMAC[1]_RMRXD[0]/ GPMC_A[9]/ UART4_TXD	EMAC[0]_MTXD[3]/ EMAC[1]_RGTXD[0]/ EMAC[1]_RMRXD[1]/ GPMC_A[10]/ UART4_CTS	EMAC[0]_MTXD[7]/ EMAC[1]_RGTXD[3]/ EMAC[1]_RMTXD[1]/ GPMC_A[14]/ UART1_CTS	EMAC[0]_MTXD[1]/ EMAC[1]_RGTXD[1]/ GPMC_A[8]/ UART4_RXD	EMAC[0]_MRXD[5]/ EMAC[0]_RGTXD[3]/ GPMC_A[2]/ UART5_CTS	EMAC[0]_MRCLK/ EMAC[0]_RGTXC/ VIN[1]B_D[4]/ EMAC[0]_RMCRSDV/ SPI[3]_SCS[2]/ GP3[27]	MDCLK/ GP1[11]	H
	EMAC[0]_MTXD[4]/ EMAC[1]_RGTXD[2]/ EMAC[1]_RMRXER/ GPMC_A[11]/ UART4_RTS				EMAC[0]_MRXD[7]/ EMAC[0]_RGTXD[1]/ GPMC_A[4]/ SPI[2]_SCS[3]	EMAC[0]_MRXD[0]/ EMAC[0]_RGTXD[0]/ VIN[1]B_D[5]/ EMAC[0]_RMTXD[0]/ GP3[28]	G
DDR[0]_D[17]		DDR[0]_D[4]	DDR[0]_D[3]	DDR[0]_D[1]	EMAC[0]_MTXD[5]/ EMAC[1]_RGTXC/ EMAC[1]_RMCRSDV/ GPMC_A[12]/ UART1_RXD	EMAC[0]_MRXD[6]/ EMAC[0]_RGTXD[2]/ GPMC_A[3]/ UART5_RTS	F
	DDR[0]_D[21]		DDR[0]_D[5]	DDR[0]_D[2]	DDR[0]_D[0]	DDR[0]_DQM[0]	E
	DDR[0]_D[20]	DDR[0]_D[13]		DDR[0]_D[6]	DDR[0]_DQS[0]	DDR[0]_DQS[0]	D
	DDR[0]_D[22]	DDR[0]_DQM[2]	DDR[0]_D[9]	DDR[0]_D[10]	DDR[0]_D[8]	DDR[0]_D[7]	C
DDR[0]_D[23]	DDR[0]_DQS[2]	DDR[0]_D[16]	DDR[0]_D[12]	DDR[0]_DQS[1]	DDR[0]_VTP	DDR[0]_DQM[1]	B
DDR[0]_D[27]	DDR[0]_DQS[2]	DDR[0]_D[15]	DDR[0]_D[14]	DDR[0]_DQS[1]	DDR[0]_D[11]	VSS	A
22	23	24	25	26	27	28	

Figure 3-4. Pin Map D

Copyright © 2011–2013, Texas Instruments Incorporated

	1	2	3	4	5	6	7
AH	VSS	DEVOSC_MXI/ DEV_CLKIN	DEVOSC_MXO	UART0_DCD/ UART3_RXD/ SPI[0]_SCS[3]/ I2C[2]_SCL/ SD1_POW/ GP1[2]	UART0_RXD	DCAN0_TX/ UART2_TXD/ I2C[3]_SDA/ GP1[0]	VOUT[0]_G_Y_YC[2]/ EMU3/ GP2[24]
AG	VSS	UART0_DTR/ UART3_CTS/ UART1_TXD/ GP1[4]	VSSA_DEVOSC	UART0_DSR/ UART3_TXD/ SPI[0]_SCS[2]/ I2C[2]_SDA/ SD1_SDWP/ GP1[3]	UART0_TXD	DCAN0_RX/ UART2_RXD/ I2C[3]_SCL/ GP1[1]	VOUT[0]_B_CB_C[2] EMU2/ GP2[22]
AF	SERDES_CLKP	SERDES_CLKN	SPI[0]_D[1]	UART0_RIN/ UART3_RTS/ UART1_RXD/ GP1[5]	UART0_RTS/ UART4_TXD/ DCAN1_RX/ SPI[1]_SCS[2]/ SD2_SDCD	VOUT[0]_R_CR[6]/	
AE	VSS	VSS	SPI[0]_D[0]		SPI[0]_SCS[1]/ SD1_SDCD/ SATA_ACT0_LED/ EDMA_EVT1/ TIM4_IO/ GP1[6]	UART0_CTS/ UART4_RXD/ DCAN1_TX/ SPI[1]_SCS[3]/ SD0_SDCD	
AD	PCIE_TXN0	PCIE_TXP0	SPI[1]_SCS[0]/ GP1[16]	RTCK		SPI[0]_SCS[0]	
AC	PCIE_RXN0	PCIE_RXP0	SPI[1]_SCLK/ GP1[17]	I2C[0]_SCL	TDO		SPI[0]_SCLK
AB	SATA_TXN0	SATA_TXP0				I2C[0]_SDA	
AA	SATA_RXP0	SATA_RXN0	SPI[1]_D[1]/ GP1[18]	TRST	MCA[2]_AFSX/ GP0[11]	SPI[1]_D[0]/ GP1[26]	TMS
Y	VSS	VSS	SD0_DAT[2]_SDRW/ SD1_DAT[6]/ GP0[5]	SD0_DAT[3]/ SD1_DAT[7]/ GP0[6]	SD0_DAT[1]_SDIRQ/ SD1_DAT[5]/ GP0[4]	SD0_CLK/ GP0[1]	TDI
W	GP1[7]	GP1[8]				DEVOSC_WAKE/ SPI[1]_SCS[1]/ TIM5_IO/ GP1[7]	TCLK
V	GP1[9]	GP1[10]	MCA[1]_AFSX	MCA[1]_AXR[0]/ SD0_DAT[4]	MCA[2]_AXR[2]/ MCA[1]_AXR[6]/ TIM2_IO/ GP0[14]	MCA[2]_AXR[1]/ SD0_DAT[7]/ UART5_TXD/ GP0[13]	VSS
U	RSV16	RSV17	UART2_TXD/ GP0[31]	UART2_RXD/ GP0[29]	MCA[1]_ACLKX	MCA[2]_ACLKX// GP0[10]	VDDA_1P8
T	AUXOSC_MXO	TCLKIN/ GP0[30]				MCA[1]_AXR[1]/ SD0_DAT[5]	DVDD
R	AUXOSC_MXI/ AUX_CLKIN	VSSA_AUXOSC	MCA[1]_AXR[2]/ MCB_FSR	MCA[0]_ACLKX	AUD_CLKIN1/ MCA[0]_AXR[8]/ MCA[1]_AHCLKX/ MCA[4]_AHCLKX/ EDMA_EVT3/ TIM2_IO/ GP0[8]	MCA[0]_AXR[4]/ MCA[1]_AXR[8]	SD0_DAT[0]/ SD1_DAT[4]/ GP0[3]

E	F	G	H
A	B	C	D

Figure 3-5. Pin Map E

AH	VIN[0]A_D[4]/ GP2[9]	VIN[0]A_D[10]_BD[2]/ GP2[15]	USB0_CE	USB0_DM	USB1_ID	USB1_DM	USB1_CE
AG	EMU0	VIN[0]A_D[9]_BD[1]/ GP2[14]	USB0_ID	USB0_DP	USB0_VBUSIN	USB1_DP	USB1_VBUSIN
AF	VOUT[0]_R_CR[5]	VIN[0]A_D[0]/ GP1[11]		USB0_DRVVBUS/ GP0[7]	VOUT[0]_R_CR[7]		VOUT[0]_G_Y_YC[9]
AE	VOUT[0]_R_CR[8]	VSS		EMU1	VIN[0]A_D[3]/ GP2[8]		VOUT[0]_G_Y_YC[8]
AD	RSV1	VOUT[0]_R_CR[2]/ EMU4/ GP2[26]		VOUT[0]_B_CB_C[4]	VOUT[0]_CLK		VOUT[0]_G_Y_YC[7]
AC	RSV5	VIN[0]A_D[2]/ GP2[7]	VOUT[0]_B_CB_C[6]	VOUT[0]_HSYNC	VIN[0]A_D[14]_BD[6]/ CAM_STROBE/ GP2[19]	VOUT[0]_R_CR[9]	VIN[0]A_D[15]_BD[7]/ CAM_SHUTTER/ GP2[20]
AB	VOUT[0]_G_Y_YC[4]	VOUT[0]_R_CR[3]/ GP2[27]	VOUT[0]_B_CB_C[7]	VIN[0]A_D[1]/ GP1[12]	VOUT[0]_G_Y_YC[5]	VOUT[0]_VSYNC	DVDD
AA	VOUT[0]_G_Y_YC[6]	VOUT[0]_R_CR[4]	VOUT[0]_AVID/ VOUT[0]_FLD/ SPI[3]_SCLK/ TIM7_IO/ GP2[21]	VIN[0]A_D[7]/ GP2[12]	VDDA_USB0_1P8	VDDA_USB_3P3	VSS
Y			VSS	DVDD	VSS	VDDA_1P8	RSV4
W		VDDA_PCIE_1P8	VDDA_PCIE_1P8	CVDD	VSS	VDDA_USB1_1P8	LDOCAP_ARM
V	RSV3	VSS	VDDA_1P8	VSS	VSSA_USB	VSSA_USB	LDOCAP_ARMRAM
U	RSV2	VDDA_SATA_1P8	VDDA_SATA_1P8	CVDD	VSS	CVDD	VSS
T	VSS	VSS	LDOCAP_SGX	LDOCAP_SERDESCLK	CVDD	VSS	CVDD_ARM
R	VSS	VSS	DVDD_M	LDOCAP_RAM1	VSS	VDDA_ARMPLL_1P8	VSS
	8	9	10	11	12	13	14

E	F	G	H
A	B	C	D

Figure 3-6. Pin Map F

Copyright © 2011–2013, Texas Instruments Incorporated

VOUT[0]_G_Y_YC[3]/ GP2[25]	VIN[0]A_D[6]/ GP2[11]	VIN[0]A_D[11]_BD[3]/ CAM_WE/ GP2[16]	HDMI_CLKN	HDMI_DN0	HDMI_DN1	HDMI_DN2	AH
VOUT[0]_B_CB_C[9]	VIN[0]A_D[5]/ GP2[10]	VIN[0]A_D[12]_BD[4]/ CLKOUT1/ GP2[17]	HDMI_CLKP	HDMI_DP0	HDMI_DP1	HDMI_DP2	AG
VOUT[0]_B_CB_C[8]		VIN[0]A_D[13]_BD[5]/ CAM_RESET/ GP2[18]	VOUT[0]_FLD/ CAM_PCLK/ GPMC_A[12]/ UART2_RTS/ GP2[2]		VIN[0]A_D[18]/ CAM_D[10]/ EMAC[1]_RMRXD[1]/ I2C[3]_SCL/ GP0[12]	VIN[0]A_D[19]/ CAM_D[11]/ EMAC[1]_RMRXD[0]/ I2C[3]_SDA/ GP0[13]	AF
VOUT[0]_B_CB_C[3]/ GP2[23]		VIN[0]B_CLK/ CLKOUT0/ GP1[9]	VIN[0]A_D[21]/ CAM_D[13]/ EMAC[1]_RMTXD[0]/ SPI[3]_SCLK/ GP0[15]		VSS	VIN[0]A_DE/ VIN[0]B_HSYNC/ UART5_TXD/ I2C[2]_SDA/ GP2[0]	AE
VOUT[0]_B_CB_C[5]		VIN[0]B_FLD/ CAM_D[4]/ GP0[21]	VOUT[1]_G_Y_YC[1]/ CAM_D[3]/ GPMC_A[5]/ UART4_RXD/ GP0[22]		VIN[0]A_VSYNC/ UART5_CTS/ GP2[4]	VSS	AD
VIN[0]B_DE/ CAM_D[6]/ GP0[19]	VIN[0]A_D[23]/ CAM_D[15]/ EMAC[1]_RMTXEN/ SPI[3]_D[0]/ GP0[17]	VIN[0]A_D[20]/ CAM_D[12]/ EMAC[1]_RMCRSDV/ SPI[3]_SCS[0]/ GP0[14]	VOUT[1]_G_Y_YC[0]/ CAM_D[2]/ GPMC_A[6]/ UART4_TXD/ GP0[23]	VOUT[1]_R_CR[1]/ CAM_D[1]/ GPMC_A[7]/ UART4_CTS/ GP0[24]	VIN[0]A_HSYNC/ UART5_RTS/ GP2[3]	VIN[0]A_D[22]/ CAM_D[14]/ EMAC[1]_RMTXD[1]/ SPI[3]_D[1]/ GP0[16]	AC
VIN[0]A_D[8]_BD[0]/ GP2[13]	DVDD	VIN[0]A_DE/ CAM_D[7]/ GP0[18]	VDDA_VID0PLL_1P8	VDDA_VDAC_1P8	VIN[0]A_CLK/ GP2[2]	VIN[0]A_D[17]/ CAM_D[9]/ EMAC[1]_RMRXER/ GP0[11]	AB
DVDD	VSS	DVDD	VDDA_VID1PLL_1P8	VSSA_VDAC	VIN[0]A_FLD/ VIN[0]B_VSYNC/ UART5_RXD/ I2C[2]_SCL/ GP2[1]	VIN[0]A_D[16]/ CAM_D[8]/ I2C[2]_SCL/ GP0[10]	AA
VSS	DVDD	VSS	VSS	VSS			Y
VDDA_1P8	VSS	VSS	VDDA_HDMI_1P8	DVDD_C	DVDD_C		W
CVDD_ARM	CVDD_ARM	VSS	VSSA_HDMI	VSS	DVDD	VSS	V
CVDD_ARM	CVDD_ARM	CVDD	VSS	CVDD	VSS	DVDD	U
CVDD_ARM	CVDD_ARM	VSS	VSS	VSS	DVDD_GPMCB	VSS	T
CVDD	VSS	CVDD	VDDA_AUDIOPLL_1P8	CVDD	VDDA_1P8	VSS	R
15	16	17	18	19	20	21	

E	F	G	H
A	B	C	D

Figure 3-7. Pin Map G

TV_OUT1	TV_RSET	TV_OUT0	VOUT[1]_B_CB_C[3]/ EMAC[1]_MRCLK/ VIN[1]A_D[0]/ UART4_CTS/ GP3[0]	VOUT[1]_B_CB_C[8]/ EMAC[1]_MRXD[4]/ VIN[1]A_D[5]/ I2C[3]_SCL/ GP3[5]	VOUT[1]_G_Y_YC[6]/ EMAC[1]_GMTCLK/ VIN[1]A_D[11]/ GP3[10]	VSS	AH
TV_VFB1	TV_VFB0	I2C[1]_SDA/ HDMI_SDA	VOUT[1]_B_CB_C[4]/ EMAC[1]_MRXD[0]/ VIN[1]A_D[1]/ UART4_RXD/ GP3[1]	VOUT[1]_G_Y_YC[5]/ EMAC[1]_MRXDV/ VIN[1]A_D[10]/ GP3[9]	VOUT[1]_R_CR[4]/ EMAC[1]_MTXD[3]/ VIN[1]A_D[15]/ SPI[3]_SCS[1]/ GP3[14]	VOUT[1]_R_CR[3]/ GPMC_A[14]/ VIN[1]A_D[22]/ HDMI_SDA/ SPI[2]_SCLK/ I2C[2]_SDA GP3[21]	AG
	VSS	I2C[1]_SCL/ HDMI_SCL	VOUT[1]_B_CB_C[5]/ EMAC[1]_MRXD[1]/ VIN[1]A_D[2]/ UART4_TXD/ GP3[2]	VOUT[1]_G_Y_YC[7]/ EMAC[1]_MTXD[0]/ VIN[1]A_D[12]/ GP3[11]	VOUT[1]_G_Y_YC[2]/ GPMC_A[13]/ VIN[1]A_D[21]/ HDMI_SCL/ SPI[2]_SCS[2]/ I2C[2]_SCL/ GP3[20]	VOUT[1]_B_CB_C[2]/ GPMC_A[0]/ VIN[1]A_D[7]/ HDMI_CEC/ SPI[2]_D[0]/ GP3[30]	AF
	VOUT[1]_B_CB_C[1]/ CAM_HS/ GPMC_A[9]/ UART2_RXD/ GP0[26]	VOUT[1]_CLK/ EMAC[1]_MTCLK/ VIN[1]A_HSYNC/ GP2[28]		VOUT[1]_G_Y_YC[8]/ EMAC[1]_MTXD[1]/ VIN[1]A_D[13]/ GP3[12]	VOUT[1]_R_CR[2]/ GPMC_A[15]/ VIN[1]A_D[23]/ HDMI_HPDET/ SPI[2]_D[1]/ GP3[22]	GPMC_A[18]/ TIM2_IO/ GP1[13]	AE
	VOUT[1]_B_CB_C[0]/ CAM_VS/ GPMC_A[10]/ UART2_TXD/ GP0[27]		VOUT[1]_B_CB_C[6]/ EMAC[1]_MRXD[2]/ VIN[1]A_D[3]/ UART3_RXD/ GP3[3]	VOUT[1]_G_Y_YC[9]/ EMAC[1]_MTXD[2]/ VIN[1]A_D[14]/ GP3[13]	GPMC_A[16]/ GP2[5]	GPMC_A[20]/ SPI[2]_SCS[1]/ GP1[15]	AD
VIN[0]A_FLD/ CAM_D[5]/ GP0[20]		VOUT[1]_HSYNC/ EMAC[1]_MCOL/ VIN[1]A_VSYNC/ SPI[3]_D[1]/ UART3_RTS/ GP2[29]	VOUT[1]_B_CB_C[7]/ EMAC[1]_MRXD[3]/ VIN[1]A_D[4]/ UART3_TXD/ GP3[4]	VOUT[1]_R_CR[5]/ EMAC[1]_MTXD[4]/ VIN[1]A_D[16]/ SPI[3]_SCLK/ GP3[15]	GPMC_A[19]/ TIM3_IO/ GP1[14]	GPMC_A[21]/ SPI[2]_D[0]/ GP1[16]	AC
	VOUT[1]_FLD/ CAM_FLD/ CAM_WE/ GPMC_A[11]/ UART2_CTS/ GP0[28]				GPMC_A[22]/ SPI[2]_D[1]/ HDMI_CEC/ TIM4_IO/ GP1[17]	GPMC_D[9]/ BTMODE[9]	AB
VOUT[1]_R_CR[0]/ CAM_D[0]/ GPMC_A[8]/ UART4_RTS/ GP0[25]	VOUT[1]_VSYNC/ EMAC[1]_MCRS/ VIN[1]A_FLD/ VIN[1]A_DE/ SPI[3]_D[0]/ UART3_CTS/ GP2[30]	VOUT[1]_B_CB_C[9]/ EMAC[1]_MRXD[5]/ VIN[1]A_D[6]/ I2C[3]_SDA/ GP3[6]	VOUT[1]_R_CR[6]/ EMAC[1]_MTXD[5]/ VIN[1]A_D[17]/ SPI[3]_D[1]/ GP3[16]	GPMC_A[23]/ SPI[2]_SCLK/ HDMI_HPDET/ TIM5_IO/ GP1[18]	GPMC_D[11]/ BTMODE[11]	GPMC_D[5]/ BTMODE[5]	AA
VOUT[1]_AVID/ EMAC[1]_MRXER/ VIN[1]A_CLK/ UART4_RTS/ TIM6_IO/ GP2[31]	VOUT[1]_G_Y_YC[3]/ EMAC[1]_MRXD[6]/ VIN[1]A_D[8]/ GP3[7]	VOUT[1]_R_CR[9]/ EMAC[1]_MTXEN/ VIN[1]A_D[20]/ UART5_TXD/ GP3[19]	GPMC_D[15]/ BTMODE[15]	GPMC_D[10]/ BTMODE[10]	GPMC_D[8]/ BTMODE[8]	GPMC_D[1]/ BTMODE[1]	Y
VOUT[1]_G_Y_YC[4]/ EMAC[1]_MRXD[7]/ VIN[1]A_D[9]/ GP3[8]	VOUT[1]_R_CR[8]/ EMAC[1]_MTXD[7]/ VIN[1]A_D[19]/ UART5_RXD/ GP3[18]				GPMC_D[3]/ BTMODE[3]	GPMC_WAIT[0]/ GPMC_A[26]/ EDMA_EVT0/ GP1[31]	W
VOUT[1]_R_CR[7]/ EMAC[1]_MTXD[6]/ VIN[1]A_D[18]/ SPI[3]_D[0]/ GP3[17]	GPMC_A[17]/ GP2[6]	GPMC_D[14]/ BTMODE[14]	GPMC_D[7]/ BTMODE[7]	GPMC_D[4]/ BTMODE[4]	GPMC_D[2]/ BTMODE[2]	GPMC_BE[1]/ GPMC_A[24]/ EDMA_EVT1/ TIM7_IO/ GP1[30]	V
DVDD	GPMC_D[13]/ BTMODE[13]	GPMC_D[12]/ BTMODE[12]	GPMC_D[6]/ BTMODE[6]	GPMC_D[0]/ BTMODE[0]	GPMC_BE[0]_CLE/ GPMC_A[25]/ EDMA_EVT2/ TIM6_IO/ GP1[29]	GPMC_WE	U
VSS	EMAC[0]_MRXD[4]/ EMAC[0]_RGRXD[3]/ GPMC_A[1]/ UART5_TXD				GPMC_OE_RE	GPMC_CS[0]/ GP1[23]	T
VSS	EMAC[0]_MRXD[2]/ EMAC[0]_RGRXD[1]/ VIN[1]B_D[7]/ EMAC[0]_RMTXEN/ GP3[30]	SD2_DAT[4]/ GPMC_A[27]/ GPMC_A[23]/ GPMC_CS[7]/ EDMA_EVT0/ TIM7_IO/ GP1[22]	EMAC[0]_MCRS/ EMAC[0]_RGRXD[2]/ VIN[1]B_D[2]/ EMAC[0]_RMRXD[1]/ GP3[25]	GPMC_CLK/ GPMC_CS[5]/ GPMC_WAIT[1]/ CLKOUT1/ EDMA_EVT3/ TIM4_IO/ GP1[27]	RSV14	RSV15	R
22	23	24	25	26	27	28	

E	F	G	H
A	B	C	D

Figure 3-8. Pin Map H

Copyright © 2011–2013, Texas Instruments Incorporated

3.2 Terminal Functions

The terminal functions tables identify the external signal names and their pin multiplexing, the associated pin (ball) numbers along with the mechanical package designator, the pin type (for example, I, O, Z, S, A, or GND), whether the pin has any internal pullup or pulldown resistors (for example, IPU, IPD, or DIS), the supply voltage source, and describe the function or functions on the pin. The MUXED column in the tables also identifies all peripheral pin functions multiplexed on a pin, the pin control register (PINCNTLx) that controls which peripheral pin function is selected for that particular pin, and indicates the state driven on the peripheral input (logic 0, logic 1, or PIN level) when the peripheral pin function is ***not*** selected (that is, the de-selected input state [DSIS]), and the Multi-Muxed [MM] option for that peripheral pin function). For more detailed information on device configuration, boot mode order, peripheral selection, and multiplexed/shared pin control, and so on, see Section 4, *Device Configurations* of this data manual.

3.2.1 Boot Configuration

Table 3-1. Boot Configuration Terminal Functions

SIGNAL NAME	SIGNAL NO.	TYPE(1)	OTHER(2) (3)	MUXED	DESCRIPTION
BOOT					
GPMC_D[15]/ **BTMODE[15]**	Y25	I	DIS DVDD_GPMC	GPMC PINCNTL104 DSIS: PIN	GPMC CS0 default GPMC_Wait enable input. This pin is multiplexed between ARM Cortex-A8 boot mode and General-Purpose Memory Controller (GPMC) peripheral functions. At reset, BTMODE[15] is sampled to determine the GPMC CS0 Wait enable: • 0 = Wait disabled • 1 = Wait enabled After reset, this pin functions as GPMC multiplexed data/address pin 15 (GPMC_D[15]).
GPMC_D[14]/ **BTMODE[14]**	V24	I	DIS DVDD_GPMC	GPMC PINCNTL103 DSIS: PIN	GPMC CS0 default Address/Data multiplexing mode input. These pins are multiplexed between ARM Cortex-A8 boot mode and General-Purpose Memory Controller (GPMC) peripheral functions. At reset, BTMODE[14:13] are sampled to determine the GPMC CS0 Address/Data multiplexing: • 00 = Not muxed • 01 = A/A/D muxed • 10 = A/D muxed • 11 = Reserved After reset, this pin functions as GPMC multiplexed data/address pins 14 through 13 (GPMC_D[14:13]).
GPMC_D[13]/ **BTMODE[13]**	U23	I	DIS DVDD_GPMC	GPMC PINCNTL102 DSIS: PIN	
GPMC_D[12]/ **BTMODE[12]**	U24	I	DIS DVDD_GPMC	GPMC PINCNTL101 DSIS: PIN	GPMC CS0 default Data Bus Width input. This pin is multiplexed between ARM Cortex-A8 boot mode and General-Purpose Memory Controller (GPMC) peripheral functions. At reset, BTMODE[12] is sampled to determine the GPMC CS0 bus width: • 0 = 8-bit data bus • 1 = 16-bit data bus After reset, this pin functions as GPMC multiplexed data/address pin 12 (GPMC_D[12]).
GPMC_D[11]/ **BTMODE[11]**	AA27	I	DIS DVDD_GPMC	GPMC PINCNTL100 DSIS: PIN	$\overline{\text{RSTOUT_WD_OUT}}$ Configuration. This pin is multiplexed between ARM Cortex-A8 boot mode and General-Purpose Memory Controller (GPMC) peripheral functions. At reset, BTMODE[11] is sampled to determine the function of the $\overline{\text{RSTOUT_WD_OUT}}$ pin: • 0 = $\overline{\text{RSTOUT}}$ is asserted when a Watchdog Timer reset, $\overline{\text{POR}}$, $\overline{\text{RESET}}$, or Emulation/Software-Global Cold/Warm reset occurs • 1 = $\overline{\text{RSTOUT_WD_OUT}}$ is asserted only when a Watchdog Timer reset occurs After reset, this pin functions as GPMC multiplexed data/address pin 11 (GPMC_D[11]).

(1) I = Input, O = Output, Z = High impedance, S = Supply voltage, GND = Ground, A = Analog signal, MM = Multi Muxed, DSIS = De-selected Input State
(2) IPD = Internal Pulldown Active, IPU = Internal Pullup Active, DIS = Internal Pull Disabled. This represents the default state of the Internal Pull during and after Reset. For more detailed information on pullup/pulldown resistors and situations where external pullup/pulldown resistors are required, see Section 4.5.1, *Pullup/Pulldown Resistors* and Section 7.3.17, *Pin Behaviors at Reset*.
(3) Specifies the operating I/O supply voltage for each signal

Copyright © 2011–2013, Texas Instruments Incorporated

Table 3-1. Boot Configuration Terminal Functions (continued)

SIGNAL NAME	SIGNAL NO.	TYPE[1]	OTHER[2] [3]	MUXED	DESCRIPTION
GPMC_D[10]/ **BTMODE[10]**	Y26	I	DIS DVDD_GPMC	GPMC PINCNTL99 DSIS: PIN	XIP (NOR) on GPMC Configuration. This pin is multiplexed between ARM Cortex-A8 boot mode and General-Purpose Memory Controller (GPMC) peripheral functions. At reset, when the XIP (MUX0), XIP (MUX1), XIP w/ WAiT (MUX0) or XIP w/ WAiT (MUX1) bootmode is selected (see Table 4-1), BTMODE[10] is sampled to select between GPMC pin muxing options A or B shown in Table 4-2, *XIP (on GPMC) Boot Options [Muxed or Non-Muxed]*. • 0 = GPMC Option A • 1 = GPMC Option B After reset, this pin functions as GPMC multiplexed data/address pin 10 (GPMC_D[10]).
GPMC_D[9]/ **BTMODE[9]**	AB28	I	DIS DVDD_GPMC	GPMC PINCNTL98 DSIS: PIN	Ethernet PHY Configuration. These pins are multiplexed between ARM Cortex-A8 boot mode and General-Purpose Memory Controller (GPMC) peripheral functions. At reset, when EMAC bootmode is selected (see Table 4-1), BTMODE[9:8] pins are sampled to determine the function of the Ethernet PHY Mode selection. • 00 = MII (GMII) • 01 = RMII • 10 = RGMII • 11 = Reserved For more detailed information on the EMAC PHY boot modes and the EMAC pin functions selected, see Section 4.2.6, *Ethernet PHY Mode Selection*. After reset, these pins function as GPMC multiplexed data/address pins 9 and 8 (GPMC_D[9] and GPMC_D[8]).
GPMC_D[8]/ **BTMODE[8]**	Y27	I	DIS DVDD_GPMC	GPMC PINCNTL97 DSIS: PIN	
GPMC_D[7]/ **BTMODE[7]**	V25	I	DIS DVDD_GPMC	GPMC PINCNTL96 DSIS: PIN	Reserved Boot Pins. These pins are multiplexed between ARM Cortex-A8 boot mode and General-Purpose Memory Controller (GPMC) peripheral functions. For proper device operation at reset, these pins should be externally pulled low. After reset, these pins function as GPMC multiplexed data/address pins 10 through 5 (GPMC_D[7:5]).
GPMC_D[6]/ **BTMODE[6]**	U25	I	DIS DVDD_GPMC	GPMC PINCNTL95 DSIS: PIN	
GPMC_D[5]/ **BTMODE[5]**	AA28	I	DIS DVDD_GPMC	GPMC PINCNTL94 DSIS: PIN	
GPMC_D[4]/ **BTMODE[4]**	V26	I	DIS DVDD_GPMC	GPMC PINCNTL93 DSIS: PIN	ARM Cortex-A8 Boot Mode Configuration Bits. These pins are multiplexed between ARM Cortex-A8 boot mode and the General-Purpose Memory Controller (GPMC) peripheral functions. At reset, the boot mode inputs BTMODE[4:0] are sampled to determine the ARM boot configuration. For more details on the types of boot modes supported, see Section 4.2, *Boot Modes*, of this document, along with the *TMS320DM814x ROM Code Memory and Peripheral Booting* chapter of the *TMS320DM814x DaVinci™ Digital Media Processors Technical Reference Manual* (Literature Number: SPRUGZ8). After reset, these pins function as GPMC multiplexed data/address pins 4 through 0 (GPMC_D[4:0]).
GPMC_D[3]/ **BTMODE[3]**	W27	I	DIS DVDD_GPMC	GPMC PINCNTL92 DSIS: PIN	
GPMC_D[2]/ **BTMODE[2]**	V27	I	DIS DVDD_GPMC	GPMC PINCNTL91 DSIS: PIN	
GPMC_D[1]/ **BTMODE[1]**	Y28	I	DIS DVDD_GPMC	GPMC PINCNTL90 DSIS: PIN	
GPMC_D[0]/ **BTMODE[0]**	U26	I	DIS DVDD_GPMC	GPMC PINCNTL89 DSIS: PIN	

Copyright © 2011–2013, Texas Instruments Incorporated

3.2.2 Camera Interface (I/F)

Table 3-2. Camera I/F Terminal Functions

SIGNAL NAME	NO.	TYPE(1)	OTHER(2) (3)	MUXED	DESCRIPTION
CAMERA I/F					
VOUT[0]_FLD/ **CAM_PCLK**/ GPMC_A[12]/ UART2_RTS/ GP2[2]	AF18	I	IPD DVDD_C	VOUT[0], GPMC, UART2, GP2 PINCNTL175 DSIS: 0	Camera Pixel Clock.
VIN[0]A_D[23]/ **CAM_D[15]**/ EMAC[1]_RMTXEN/ SPI[3]_D[0]/ GP0[17]	AC16	I	IPD DVDD_C	VIN[0]A, EMAC[1], SPI[3], GP0 PINCNTL163 DSIS: PIN	Camera data inputs
VIN[0]A_D[22]/ **CAM_D[14]**/ EMAC[1]_RMTXD[1]/ SPI[3]_D[1]/ GP0[16]	AC21	I	IPD DVDD_C	VIN[0]A, EMAC[1]_RM, SPI[3], GP0 PINCNTL162 DSIS: PIN	
VIN[0]A_D[21]/ **CAM_D[13]**/ EMAC[1]_RMTXD[0]/ SPI[3]_SCLK/ GP0[15]	AE18	I	IPD DVDD_C	VIN[0]A, EMAC[1]_RM, SPI[3], GP0 PINCNTL161 DSIS: PIN	
VIN[0]A_D[20]/ **CAM_D[12]**/ EMAC[1]_RMCRSDV/ SPI[3]_SCS[0]/ GP0[14]	AC17	I	IPD DVDD_C	VIN[0]A, EMAC[1]_RM, SPI[3], GP0 PINCNTL160 DSIS: PIN	
VIN[0]A_D[19]/ **CAM_D[11]**/ EMAC[1]_RMRXD[0]/ I2C[3]_SDA/ GP0[13]	AF21	I	IPU DVDD_C	VIN[0]A, EMAC[1]_RM, I2C[3], GP0 PINCNTL159 DSIS: PIN	
VIN[0]A_D[18]/ **CAM_D[10]**/ EMAC[1]_RMRXD[1]/ I2C[3]_SCL/ GP0[12]	AF20	I	IPU DVDD_C	VIN[0]A, EMAC[1]_RM, I2C[3], GP0 PINCNTL158 DSIS: PIN	
VIN[0]A_D[17]/ **CAM_D[9]**/ EMAC[1]_RMRXER/ GP0[11]	AB21	I	IPD DVDD_C	VIN[0]A, EMAC[1]_RM, GP0 PINCNTL157 DSIS: PIN	
VIN[0]A_D[16]/ **CAM_D[8]**/ I2C[2]_SCL/ GP0[10]	AA21	I	IPU DVDD_C	VIN[0]A, I2C[2], GP0 PINCNTL156 DSIS: PIN	

(1) I = Input, O = Output, Z = High impedance, S = Supply voltage, GND = Ground, A = Analog signal, MM = Multi Muxed, DSIS = De-selected Input State
(2) IPD = Internal Pulldown Active, IPU = Internal Pullup Active, DIS = Internal Pull Disabled. This represents the default state of the Internal Pull after Reset. For more detailed information on pullup/pulldown resistors and situations where external pullup/pulldown resistors are required, see Section 4.5.1, *Pullup/Pulldown Resistors* and Section 7.3.17, *Pin Behaviors at Reset*.
(3) Specifies the operating I/O supply voltage for each signal

Copyright © 2011–2013, Texas Instruments Incorporated

Table 3-2. Camera I/F Terminal Functions (continued)

SIGNAL NAME	NO.	TYPE(1)	OTHER(2) (3)	MUXED	DESCRIPTION
VIN[0]A_DE/ **CAM_D[7]**/ GP0[18]	AB17	I	IPU DVDD_C	VIN[0]A, GP0 PINCNTL164 DSIS: PIN	Camera data inputs
VIN[0]B_DE/ **CAM_D[6]**/ GP0[19]	AC15	I	IPU DVDD_C	VIN[0]A, GP0 PINCNTL165 DSIS: PIN	
VIN[0]A_FLD/ **CAM_D[5]**/ GP0[20]	AC22	I	IPU DVDD_C	VIN[0]A, GP0 PINCNTL166 DSIS: PIN	
VIN[0]B_FLD/ **CAM_D[4]**/ GP0[21]	AD17	I	IPU DVDD_C	VIN[0]B, GP0 PINCNTL167 DSIS: PIN	
VOUT[1]_G_Y_YC[1]/ **CAM_D[3]**/ GPMC_A[5]/ UART4_RXD/ GP0[22]	AD18	I	IPU DVDD_C	VOUT[1], GPMC, UART4, GP0 PINCNTL168 DSIS: PIN	
VOUT[1]_G_Y_YC[0]/ **CAM_D[2]**/ GPMC_A[6]/ UART4_TXD/ GP0[23]	AC18	I	IPD DVDD_C	VOUT[1], GPMC, UART4, GP0 PINCNTL169 DSIS: PIN	
VOUT[1]_R_CR[1]/ **CAM_D[1]**/ GPMC_A[7]/ UART4_CTS/ GP0[24]	AC19	I	IPD DVDD_C	VOUT[1], GPMC, UART4, GP0 PINCNTL170 DSIS: PIN	
VOUT[1]_R_CR[0]/ **CAM_D[0]**/ GPMC_A[8]/ UART4_RTS/ GP0[25]	AA22	I	IPD DVDD_C	VOUT[1], GPMC, UART4, GP0 PINCNTL171 DSIS: PIN	
VOUT[1]_B_CB_C[1]/ **CAM_HS**/ GPMC_A[9]/ UART2_RXD/ GP0[26]	AE23	I/O	IPD DVDD_C	VOUT[1], GPMC, UART2, GP0 PINCNTL172 DSIS: 0	Camera Horizontal Synchronization
VOUT[1]_B_CB_C[0]/ **CAM_VS**/ GPMC_A[10]/ UART2_TXD/ GP0[27]	AD23	I/O	IPU DVDD_C	VOUT[1], GPMC, UART2, GP0 PINCNTL173 DSIS: 0	Camera Vertical Synchronization
VIN[0]A_D[13]_BD[5]/ **CAM_RESET**/ GP2[18]	AF17	I/O	IPD DVDD	VIN[0]AB, GP2 PINCNTL153 DSIS: 0	Camera Reset. Used for Strobe Synchronization
VIN[0]A_D[11]_BD[3]/ **CAM_WE**/ GP2[16]	AH17	I	IPD DVDD	VIN[0]AB. GP2 PINCNTL151 DSIS: 0 MM: MUX1	Camera Write Enable
VOUT[1]_FLD/ CAM_FLD/ **CAM_WE**/ GPMC_A[11]/ UART2_CTS/ GP0[28]	AB23	I	IPD DVDD_C	VOUT[1], CAMERA_I/F, GPMC, UART2, GP0 PINCNTL174 DSIS: 0 MM: MUX0	
VOUT[1]_FLD/ **CAM_FLD**/ CAM_WE/ GPMC_A[11]/ UART2_CTS/ GP0[28]	AB23	I/O	IPD DVDD_C	VOUT[1], CAMERA_I/F, GPMC, UART2, GP0 PINCNTL174 DSIS: 0	Camera Field Identification input

Copyright © 2011–2013, Texas Instruments Incorporated

Table 3-2. Camera I/F Terminal Functions (continued)

SIGNAL NAME	NO.	TYPE[1]	OTHER[2] [3]	MUXED	DESCRIPTION
VIN[0]A_D[14]_BD[6]/ **CAM_STROBE**/ GP2[19]	AC12	O	IPD DVDD	VIN[0]AB, GP2 PINCNTL154 DSIS: N/A	Camera Flash Strobe Control Signal
VIN[0]A_D[15]_BD[7]/ **CAM_SHUTTER**/ GP2[20]	AC14	O	IPD DVDD	VIN[0]AB, GP2 PINCNTL155 DSIS: N/A	Camera Mechanical Shutter Control Signal

Copyright © 2011–2013, Texas Instruments Incorporated

3.2.3 Controller Area Network (DCAN) Modules (DCAN0, DCAN1)

Table 3-3. DCAN Terminal Functions

SIGNAL NAME	SIGNAL NO.	TYPE(1)	OTHER(2) (3)	MUXED	DESCRIPTION
DCAN0					
DCAN0_RX/ UART2_RXD/ I2C[3]_SCL/ GP1[1]	AG6	I/O	IPU DVDD	UART2, I2C[3], GP1 PINCNTL69 DSIS: 1	DCAN0 receive data pin.
DCAN0_TX/ UART2_TXD/ I2C[3]_SDA/ GP1[0]	AH6	I/O	IPU DVDD	UART2, I2C[3], GP1 PINCNTL68 DSIS: 1	DCAN0 transmit data pin.
DCAN1					
$\overline{\text{UART0_RTS}}$/ UART4_TXD/ **DCAN1_RX/** SPI[1]_SCS[2]/ SD2_SDCD	AF5	I/O	IPU DVDD	UART0, UART4, SPI[1], SD2 PINCNTL73 DSIS: 1	DCAN1 receive data pin.
$\overline{\text{UART0_CTS}}$/ UART4_RXD/ **DCAN1_TX/** SPI[1]_SCS[3]/ SD0_SDCD	AE6	I/O	IPU DVDD	UART0, UART4, SPI[1], SD0 PINCNTL72 DSIS: 1	DCAN1 transmit data pin.

(1) I = Input, O = Output, Z = High impedance, S = Supply voltage, GND = Ground, A = Analog signal, MM = Multi Muxed, DSIS = De-selected Input State
(2) IPD = Internal Pulldown Active, IPU = Internal Pullup Active, DIS = Internal Pull Disabled. This represents the default state of the Internal Pull after Reset. For more detailed information on pullup/pulldown resistors and situations where external pullup/pulldown resistors are required, see Section 4.5.1, *Pullup/Pulldown Resistors* and Section 7.3.17, *Pin Behaviors at Reset*.
(3) Specifies the operating I/O supply voltage for each signal

3.2.4 DDR2/DDR3 Memory Controller

Table 3-4. DDR2/DDR3 Memory Controller 0 Terminal Functions

SIGNAL NAME	NO.	TYPE(1)	OTHER(2) (3)	DESCRIPTION
DDR2/DDR3 Memory Controller 0 (DDR[0])				
DDR[0]_CLK	B16	O	IPD/DIS DVDD_DDR[0]	DDR[0] Clock The internal pulldown (IPD) is enabled for this pin when the device is in reset and the IPD is disabled (DIS) when reset is released.
$\overline{\text{DDR[0]_CLK}}$	A16	O	IPU/DIS DVDD_DDR[0]	DDR[0] Negative Clock The internal pullup (IPU) is enabled for this pin when the device is in reset and the IPU is disabled (DIS) when reset is released.
DDR[0]_CKE	H18	O	IPD DVDD_DDR[0]	DDR[0] Clock Enable
$\overline{\text{DDR[0]_WE}}$	C17	O	IPU/DIS DVDD_DDR[0]	DDR[0] Write Enable The internal pullup (IPU) is enabled for this pin when the device is in reset and the IPU is disabled (DIS) when reset is released.
$\overline{\text{DDR[0]_CS[0]}}$	F18	O	IPU/DIS DVDD_DDR[0]	DDR[0] Chip Select 0 The internal pullup (IPU) is enabled for this pin when the device is in reset and the IPU is disabled (DIS) when reset is released.
$\overline{\text{DDR[0]_CS[1]}}$	G17	O	IPU/DIS DVDD_DDR[0]	DDR[0] Chip Select 1 The internal pullup (IPU) is enabled for this pin when the device is in reset and the IPU is disabled (DIS) when reset is released.
$\overline{\text{DDR[0]_RAS}}$	B18	O	IPU/DIS DVDD_DDR[0]	DDR[0] Row Address Strobe output The internal pullup (IPU) is enabled for this pin when the device is in reset and the IPU is disabled (DIS) when reset is released.
$\overline{\text{DDR[0]_CAS}}$	C18	O	IPU/DIS DVDD_DDR[0]	DDR[0] Column Address Strobe output The internal pullup (IPU) is enabled for this pin when the device is in reset and the IPU is disabled (DIS) when reset is released.
DDR[0]_DQM[3]	F20	O	IPU/IPD DVDD_DDR[0]	DDR[0] Data Mask outputs DDR[0]_DQM[3]: For upper byte data bus DDR[0]_D[31:24] DDR[0]_DQM[2]: For DDR[0]_D[23:16] DDR[0]_DQM[1]: For DDR[0]_D[15:8] DDR[0]_DQM[0]: For lower byte data bus DDR[0]_D[7:0] The internal pullup (IPU) is enabled for these pins when the device is in reset and switches to an IPD enabled when reset is released.
DDR[0]_DQM[2]	C24	O	IPU/IPD DVDD_DDR[0]	
DDR[0]_DQM[1]	B28	O	IPU/IPD DVDD_DDR[0]	
DDR[0]_DQM[0]	E28	O	IPU/IPD DVDD_DDR[0]	
DDR[0]_DQS[3]	B21	I/O	IPD DVDD_DDR[0]	Data strobe input/outputs for each byte of the 32-bit data bus. They are outputs to the DDR[0] memory when writing and inputs when reading. They are used to synchronize the data transfers. DDR[0]_DQS[3]: For upper byte data bus DDR[0]_D[31:24] DDR[0]_DQS[2]: For DDR[0]_D[23:16] DDR[0]_DQS[1]: For DDR[0]_D[15:8] DDR[0]_DQS[0]: For lower byte data bus DDR[0]_D[7:0]
DDR[0]_DQS[2]	B23	I/O	IPD DVDD_DDR[0]	
DDR[0]_DQS[1]	B26	I/O	IPD DVDD_DDR[0]	
DDR[0]_DQS[0]	D28	I/O	IPD DVDD_DDR[0]	
$\overline{\text{DDR[0]_DQS[3]}}$	A21	I/O	IPU DVDD_DDR[0]	Complementary data strobe input/outputs for each byte of the 32-bit data bus. They are outputs to the DDR[0] memory when writing and inputs when reading. They are used to synchronize the data transfers. $\overline{\text{DDR[0]_DQS[3]}}$: For upper byte data bus DDR[0]_D[31:24] $\overline{\text{DDR[0]_DQS[2]}}$: For DDR[0]_D[23:16] $\overline{\text{DDR[0]_DQS[1]}}$: For DDR[0]_D[15:8] DDR[0]_DQS[0]: For lower byte data bus DDR[0]_D[7:0]
$\overline{\text{DDR[0]_DQS[2]}}$	A23	I/O	IPU DVDD_DDR[0]	
$\overline{\text{DDR[0]_DQS[1]}}$	A26	I/O	IPU DVDD_DDR[0]	
$\overline{\text{DDR[0]_DQS[0]}}$	D27	I/O	IPU DVDD_DDR[0]	

(1) I = Input, O = Output, Z = High impedance, S = Supply voltage, GND = Ground, A = Analog signal, MM = Multi Muxed, DSIS = De-selected Input State
(2) IPD = Internal Pulldown Active, IPU = Internal Pullup Active, DIS = Internal Pull Disabled. This represents the default state of the Internal Pull during and after Reset. For more detailed information on pullup/pulldown resistors and situations where external pullup/pulldown resistors are required, see Section 4.5.1, *Pullup/Pulldown Resistors* and Section 7.3.17, *Pin Behaviors at Reset*.
(3) Specifies the operating I/O supply voltage for each signal

Copyright © 2011–2013, Texas Instruments Incorporated

Table 3-4. DDR2/DDR3 Memory Controller 0 Terminal Functions (continued)

SIGNAL NAME	NO.	TYPE[1]	OTHER[2] [3]	DESCRIPTION
DDR[0]_ODT[0]	G18	O	IPD/DIS DVDD_DDR[0]	DDR[0] On-Die Termination for Chip Select 0. The internal pulldown (IPD) is enabled for this pin when the device is in reset and the IPD is disabled (DIS) when reset is released.
DDR[0]_ODT[1]	H19	O	IPD/DIS DVDD_DDR[0]	DDR[0] On-Die Termination for Chip Select 1. The internal pulldown (IPD) is enabled for this pin when the device is in reset and the IPD is disabled (DIS) when reset is released.
DDR[0]_RST	G19	O	IPD/DIS DVDD_DDR[0]	DDR[0] Reset output The internal pulldown (IPD) is enabled for this pin when the device is in reset and the IPD is disabled (DIS) when reset is released.
DDR[0]_BA[2]	A18	O	IPU/DIS DVDD_DDR[0]	DDR[0] Bank Address outputs The internal pullup (IPU) is enabled for these pins when the device is in reset and the IPU is disabled (DIS) when reset is released.
DDR[0]_BA[1]	A20	O	IPU/DIS DVDD_DDR[0]	
DDR[0]_BA[0]	F15	O	IPU/DIS DVDD_DDR[0]	
DDR[0]_A[14]	F16	O	IPU/DIS DVDD_DDR[0]	DDR[0] Address Bus The internal pullup (IPU) is enabled for these pins when the device is in reset and the IPU is disabled (DIS) when reset is released.
DDR[0]_A[13]	F17	O	IPU/DIS DVDD_DDR[0]	
DDR[0]_A[12]	E17	O	IPU/DIS DVDD_DDR[0]	
DDR[0]_A[11]	D17	O	IPU/DIS DVDD_DDR[0]	
DDR[0]_A[10]	A19	O	IPU/DIS DVDD_DDR[0]	
DDR[0]_A[9]	C15	O	IPU/DIS DVDD_DDR[0]	
DDR[0]_A[8]	B15	O	IPU/DIS DVDD_DDR[0]	
DDR[0]_A[7]	E18	O	IPU/DIS DVDD_DDR[0]	
DDR[0]_A[6]	A15	O	IPU/DIS DVDD_DDR[0]	
DDR[0]_A[5]	B17	O	IPU/DIS DVDD_DDR[0]	
DDR[0]_A[4]	D15	O	IPU/DIS DVDD_DDR[0]	
DDR[0]_A[3]	E15	O	IPU/DIS DVDD_DDR[0]	
DDR[0]_A[2]	D18	O	IPU/DIS DVDD_DDR[0]	
DDR[0]_A[1]	F19	O	IPU/DIS DVDD_DDR[0]	
DDR[0]_A[0]	B19	O	IPU/DIS DVDD_DDR[0]	

Copyright © 2011–2013, Texas Instruments Incorporated

Table 3-4. DDR2/DDR3 Memory Controller 0 Terminal Functions (continued)

SIGNAL NAME	NO.	TYPE (1)	OTHER (2) (3)	DESCRIPTION
DDR[0]_D[31]	B20	I/O	IPD DVDD_DDR[0]	DDR[0] Data Bus
DDR[0]_D[30]	D21	I/O	IPD DVDD_DDR[0]	
DDR[0]_D[29]	C21	I/O	IPD DVDD_DDR[0]	
DDR[0]_D[28]	C20	I/O	IPD DVDD_DDR[0]	
DDR[0]_D[27]	A22	I/O	IPD DVDD_DDR[0]	
DDR[0]_D[26]	G20	I/O	IPD DVDD_DDR[0]	
DDR[0]_D[25]	F21	I/O	IPD DVDD_DDR[0]	
DDR[0]_D[24]	H20	I/O	IPD DVDD_DDR[0]	
DDR[0]_D[23]	B22	I/O	IPD DVDD_DDR[0]	
DDR[0]_D[22]	C23	I/O	IPD DVDD_DDR[0]	
DDR[0]_D[21]	E23	I/O	IPD DVDD_DDR[0]	
DDR[0]_D[20]	D23	I/O	IPD DVDD_DDR[0]	
DDR[0]_D[19]	G21	I/O	IPD DVDD_DDR[0]	
DDR[0]_D[18]	H21	I/O	IPD DVDD_DDR[0]	
DDR[0]_D[17]	F22	I/O	IPD DVDD_DDR[0]	
DDR[0]_D[16]	B24	I/O	IPD DVDD_DDR[0]	

Copyright © 2011–2013, Texas Instruments Incorporated

Table 3-4. DDR2/DDR3 Memory Controller 0 Terminal Functions (continued)

SIGNAL NAME	NO.	TYPE (1)	OTHER (2) (3)	DESCRIPTION
DDR[0]_D[15]	A24	I/O	IPD DVDD_DDR[0]	DDR[0] Data Bus
DDR[0]_D[14]	A25	I/O	IPD DVDD_DDR[0]	
DDR[0]_D[13]	D24	I/O	IPD DVDD_DDR[0]	
DDR[0]_D[12]	B25	I/O	IPD DVDD_DDR[0]	
DDR[0]_D[11]	A27	I/O	IPD DVDD_DDR[0]	
DDR[0]_D[10]	C26	I/O	IPD DVDD_DDR[0]	
DDR[0]_D[9]	C25	I/O	IPD DVDD_DDR[0]	
DDR[0]_D[8]	C27	I/O	IPD DVDD_DDR[0]	
DDR[0]_D[7]	C28	I/O	IPD DVDD_DDR[0]	
DDR[0]_D[6]	D26	I/O	IPD DVDD_DDR[0]	
DDR[0]_D[5]	E25	I/O	IPD DVDD_DDR[0]	
DDR[0]_D[4]	F24	I/O	IPD DVDD_DDR[0]	
DDR[0]_D[3]	F25	I/O	IPD DVDD_DDR[0]	
DDR[0]_D[2]	E26	I/O	IPD DVDD_DDR[0]	
DDR[0]_D[1]	F26	I/O	IPD DVDD_DDR[0]	
DDR[0]_D[0]	E27	I/O	IPD DVDD_DDR[0]	
DDR[0]_VTP	B27	I	– DVDD_DDR[0]	DDR VTP Compensation Resistor Connection

Table 3-5. DDR2/DDR3 Memory Controller 1 Terminal Functions

SIGNAL NAME	NO.	TYPE(1)	OTHER(2) (3)	DESCRIPTION
DDR2/DDR3 Memory Controller 1 (DDR[1])				
DDR[1]_CLK	B13	O	IPD/DIS DVDD_DDR[1]	DDR[1] Clock The internal pulldown (IPD) is enabled for this pin when the device is in reset and the IPD is disabled (DIS) when reset is released.
$\overline{\text{DDR[1]_CLK}}$	A13	O	IPU/DIS DVDD_DDR[1]	DDR[1] Negative Clock The internal pullup (IPU) is enabled for this pin when the device is in reset and the IPU is disabled (DIS) when reset is released.
DDR[1]_CKE	H11	O	IPD DVDD_DDR[1]	DDR[1] Clock Enable
$\overline{\text{DDR[1]_WE}}$	E12	O	IPU/DIS DVDD_DDR[1]	DDR[1] Write Enable The internal pullup (IPU) is enabled for this pin when the device is in reset and the IPU is disabled (DIS) when reset is released.
$\overline{\text{DDR[1]_CS[0]}}$	G12	O	IPU/DIS DVDD_DDR[1]	DDR[1] Chip Select 0 The internal pullup (IPU) is enabled for this pin when the device is in reset and the IPU is disabled (DIS) when reset is released.
$\overline{\text{DDR[1]_CS[1]}}$	G11	O	IPU/DIS DVDD_DDR[1]	DDR[1] Chip Select 1 The internal pullup (IPU) is enabled for this pin when the device is in reset and the IPU is disabled (DIS) when reset is released.
$\overline{\text{DDR[1]_RAS}}$	C12	O	IPU/DIS DVDD_DDR[1]	DDR[1] Row Address Strobe output The internal pullup (IPU) is enabled for this pin when the device is in reset and the IPU is disabled (DIS) when reset is released.
$\overline{\text{DDR[1]_CAS}}$	F13	O	IPU/DIS DVDD_DDR[1]	DDR[1] Column Address Strobe output The internal pullup (IPU) is enabled for this pin when the device is in reset and the IPU is disabled (DIS) when reset is released.
DDR[1]_DQM[3]	G9	O	IPU/IPD DVDD_DDR[1]	DDR[1] Data Mask outputs DDR[1]_DQM[3]: For upper byte data bus DDR[1]_D[31:24] DDR[1]_DQM[2]: For DDR[1]_D[23:16] DDR[1]_DQM[1]: For DDR[1]_D[15:8] DDR[1]_DQM[0]: For lower byte data bus DDR[1]_D[7:0] The internal pullup (IPU) is enabled for these pins when the device is in reset and switches to an IPD enabled when reset is released.
DDR[1]_DQM[2]	G8	O	IPU/IPD DVDD_DDR[1]	
DDR[1]_DQM[1]	B2	O	IPU/IPD DVDD_DDR[1]	
DDR[1]_DQM[0]	F4	O	IPU/IPD DVDD_DDR[1]	
DDR[1]_DQS[3]	B8	I/O	IPD DVDD_DDR[1]	Data strobe input/outputs for each byte of the 32-bit data bus. They are outputs to the DDR[1] memory when writing and inputs when reading. They are used to synchronize the data transfers. DDR[1]_DQS[3]: For upper byte data bus DDR[1]_D[31:24] DDR[1]_DQS[2]: For DDR[1]_D[23:16] DDR[1]_DQS[1]: For DDR[1]_D[15:8] DDR[1]_DQS[0]: For lower byte data bus DDR[1]_D[7:0]
DDR[1]_DQS[2]	A6	I/O	IPD DVDD_DDR[1]	
DDR[1]_DQS[1]	B3	I/O	IPD DVDD_DDR[1]	
DDR[1]_DQS[0]	D1	I/O	IPD DVDD_DDR[1]	
$\overline{\text{DDR[1]_DQS[3]}}$	A8	I/O	IPU DVDD_DDR[1]	Complementary data strobe input/outputs for each byte of the 32-bit data bus. They are outputs to the DDR[1] memory when writing and inputs when reading. They are used to synchronize the data transfers. $\overline{\text{DDR[1]_DQS[3]}}$: For upper byte data bus DDR[1]_D[31:24] $\overline{\text{DDR[1]_DQS[2]}}$: For DDR[1]_D[23:16] $\overline{\text{DDR[1]_DQS[1]}}$: For DDR[1]_D[15:8] DDR[1]_DQS[0]: For lower byte data bus DDR[1]_D[7:0]
$\overline{\text{DDR[1]_DQS[2]}}$	B6	I/O	IPU DVDD_DDR[1]	
$\overline{\text{DDR[1]_DQS[1]}}$	A3	I/O	IPU DVDD_DDR[1]	
$\overline{\text{DDR[1]_DQS[0]}}$	D2	I/O	IPU DVDD_DDR[1]	
DDR[1]_ODT[0]	H10	O	IPD/DIS DVDD_DDR[1]	DDR[1] On-Die Termination for Chip Select 0. The internal pulldown (IPD) is enabled for this pin when the device is in reset and the IPD is disabled (DIS) when reset is released.

(1) I = Input, O = Output, Z = High impedance, S = Supply voltage, GND = Ground, A = Analog signal, MM = Multi Muxed, DSIS = De-selected Input State
(2) IPD = Internal Pulldown Active, IPU = Internal Pullup Active, DIS = Internal Pull Disabled. This represents the default state of the Internal Pull during and after Reset. For more detailed information on pullup/pulldown resistors and situations where external pullup/pulldown resistors are required, see Section 4.5.1, *Pullup/Pulldown Resistors* and Section 7.3.17, *Pin Behaviors at Reset*.
(3) Specifies the operating I/O supply voltage for each signal

Copyright © 2011–2013, Texas Instruments Incorporated

Table 3-5. DDR2/DDR3 Memory Controller 1 Terminal Functions (continued)

SIGNAL NAME	NO.	TYPE[1]	OTHER[2] [3]	DESCRIPTION
DDR[1]_ODT[1]	F11	O	IPD/DIS DVDD_DDR[1]	DDR[1] On-Die Termination for Chip Select 1. The internal pulldown (IPD) is enabled for this pin when the device is in reset and the IPD is disabled (DIS) when reset is released.
DDR[1]_RST	G10	O	IPD/DIS DVDD_DDR[1]	DDR[1] Reset output. The internal pulldown (IPD) is enabled for this pin when the device is in reset and the IPD is disabled (DIS) when reset is released.
DDR[1]_BA[2]	D12	O	IPU/DIS DVDD_DDR[1]	DDR[1] Bank Address outputs The internal pullup (IPU) is enabled for these pins when the device is in reset and the IPU is disabled (DIS) when reset is released.
DDR[1]_BA[1]	A10	O	IPU/DIS DVDD_DDR[1]	
DDR[1]_BA[0]	F14	O	IPU/DIS DVDD_DDR[1]	
DDR[1]_A[14]	D11	O	IPU/DIS DVDD_DDR[1]	DDR[1] Address Bus The internal pullup (IPU) is enabled for these pins when the device is in reset and the IPU is disabled (DIS) when reset is released.
DDR[1]_A[13]	E11	O	IPU/DIS DVDD_DDR[1]	
DDR[1]_A[12]	B10	O	IPU/DIS DVDD_DDR[1]	
DDR[1]_A[11]	A11	O	IPU/DIS DVDD_DDR[1]	
DDR[1]_A[10]	F12	O	IPU/DIS DVDD_DDR[1]	
DDR[1]_A[9]	C14	O	IPU/DIS DVDD_DDR[1]	
DDR[1]_A[8]	E14	O	IPU/DIS DVDD_DDR[1]	
DDR[1]_A[7]	A9	O	IPU/DIS DVDD_DDR[1]	
DDR[1]_A[6]	D14	O	IPU/DIS DVDD_DDR[1]	
DDR[1]_A[5]	B12	O	IPU/DIS DVDD_DDR[1]	
DDR[1]_A[4]	B14	O	IPU/DIS DVDD_DDR[1]	
DDR[1]_A[3]	A14	O	IPU/DIS DVDD_DDR[1]	
DDR[1]_A[2]	C11	O	IPU/DIS DVDD_DDR[1]	
DDR[1]_A[1]	F10	O	IPU/DIS DVDD_DDR[1]	
DDR[1]_A[0]	B11	O	IPU/DIS DVDD_DDR[1]	

Copyright © 2011–2013, Texas Instruments Incorporated

Table 3-5. DDR2/DDR3 Memory Controller 1 Terminal Functions (continued)

SIGNAL NAME	SIGNAL NO.	TYPE[1]	OTHER[2] [3]	DESCRIPTION
DDR[1]_D[31]	B9	I/O	IPD DVDD_DDR[1]	DDR[1] Data Bus
DDR[1]_D[30]	C8	I/O	IPD DVDD_DDR[1]	
DDR[1]_D[29]	D8	I/O	IPD DVDD_DDR[1]	
DDR[1]_D[28]	C9	I/O	IPD DVDD_DDR[1]	
DDR[1]_D[27]	A7	I/O	IPD DVDD_DDR[1]	
DDR[1]_D[26]	F8	I/O	IPD DVDD_DDR[1]	
DDR[1]_D[25]	H9	I/O	IPD DVDD_DDR[1]	
DDR[1]_D[24]	F9	I/O	IPD DVDD_DDR[1]	
DDR[1]_D[23]	B7	I/O	IPD DVDD_DDR[1]	
DDR[1]_D[22]	D6	I/O	IPD DVDD_DDR[1]	
DDR[1]_D[21]	E6	I/O	IPD DVDD_DDR[1]	
DDR[1]_D[20]	C6	I/O	IPD DVDD_DDR[1]	
DDR[1]_D[19]	B5	I/O	IPD DVDD_DDR[1]	
DDR[1]_D[18]	C5	I/O	IPD DVDD_DDR[1]	
DDR[1]_D[17]	F7	I/O	IPD DVDD_DDR[1]	
DDR[1]_D[16]	H8	I/O	IPD DVDD_DDR[1]	

Copyright © 2011–2013, Texas Instruments Incorporated

Table 3-5. DDR2/DDR3 Memory Controller 1 Terminal Functions (continued)

SIGNAL NAME	NO.	TYPE[1]	OTHER[2] [3]	DESCRIPTION
DDR[1]_D[15]	A5	I/O	IPD DVDD_DDR[1]	DDR[1] Data Bus
DDR[1]_D[14]	A4	I/O	IPD DVDD_DDR[1]	
DDR[1]_D[13]	C4	I/O	IPD DVDD_DDR[1]	
DDR[1]_D[12]	B4	I/O	IPD DVDD_DDR[1]	
DDR[1]_D[11]	A2	I/O	IPD DVDD_DDR[1]	
DDR[1]_D[10]	C3	I/O	IPD DVDD_DDR[1]	
DDR[1]_D[9]	D5	I/O	IPD DVDD_DDR[1]	
DDR[1]_D[8]	C2	I/O	IPD DVDD_DDR[1]	
DDR[1]_D[7]	C1	I/O	IPD DVDD_DDR[1]	
DDR[1]_D[6]	D3	I/O	IPD DVDD_DDR[1]	
DDR[1]_D[5]	E4	I/O	IPD DVDD_DDR[1]	
DDR[1]_D[4]	F5	I/O	IPD DVDD_DDR[1]	
DDR[1]_D[3]	E1	I/O	IPD DVDD_DDR[1]	
DDR[1]_D[2]	E2	I/O	IPD DVDD_DDR[1]	
DDR[1]_D[1]	F3	I/O	IPD DVDD_DDR[1]	
DDR[1]_D[0]	E3	I/O	IPD DVDD_DDR[1]	
DDR[1]_VTP	B1	I	– DVDD_DDR[1]	DDR[1] VTP Compensation Resistor Connection

Copyright © 2011–2013, Texas Instruments Incorporated

3.2.5 EDMA

Table 3-6. EDMA Terminal Functions

SIGNAL NAME	NO.	TYPE(1)	OTHER(2) (3)	MUXED	DESCRIPTION
EDMA					
AUD_CLKIN1/ MCA[0]_AXR[8]/ MCA[1]_AHCLKX/ MCA[4]_AHCLKX/ **EDMA_EVT3**/ TIM2_IO/ GP0[8]	R5	I	IPD DVDD	AUD_CLKIN1, MCA[0], MCA[1], MCA[4], TIMER2, GP0 PINCNTL15 DSIS: PIN MM: MUX1	External EDMA Event 3
GPMC_CLK/ $\overline{\text{GPMC_CS[5]}}$/ GPMC_WAIT[1]/ CLKOUT1/ **EDMA_EVT3**/ TIM4_IO/ GP1[27]	R26	I	IPU DVDD_GPMC	GPMC, CLKOUT1, TIMER4, GP1 PINCNTL127 DSIS: PIN MM: MUX0	
AUD_CLKIN2/ MCA[0]_AXR[9]/ MCA[2]_AHCLKX/ MCA[5]_AHCLKX/ **EDMA_EVT2**/ TIM3_IO/ GP0[9]	H1	I	IPD DVDD	AUD_CLKIN2, MCA[0], MCA[2]. MCA[5], TIMER3, GP0 PINCNTL16 DSIS: PIN MM: MUX1	External EDMA Event 2
GPMC_$\overline{\text{BE[0]}}$_CLE/ GPMC_A[25]/ **EDMA_EVT2**/ TIM6_IO/ GP1[29]	U27	I	IPD DVDD_GPMC	GPMC, TIMER6, GP1 PINCNTL131 DSIS: PIN MM: MUX0	
$\overline{\text{SPI[0]_SCS[1]}}$/ SD1_SDCD/ SATA_ACT0_LED/ **EDMA_EVT1**/ TIM4_IO/ GP1[6]	AE5	I	IPU DVDD	SPI[0], SD1, SATA, TIMER4, GP1 PINCNTL80 DSIS: PIN MM: MUX1	External EDMA Event 1
GPMC_$\overline{\text{BE[1]}}$/ GPMC_A[24]/ **EDMA_EVT1**/ TIM7_IO/ GP1[30]	V28	I	IPD DVDD_GPMC	GPMC, TIMER7, GP1 PINCNTL132 DSIS: PIN MM: MUX0	
SD2_DAT[4]/ GPMC_A[27]/ GPMC_A[23]/ $\overline{\text{GPMC_CS[7]}}$/ **EDMA_EVT0**/ TIM7_IO/ GP1[22]	R24	I	IPU DVDD_GPMC	SD2, GPMC, TIMER7, GP1 PINCNTL116 DSIS: PIN MM: MUX1	External EDMA Event 0
GPMC_WAIT[0]/ GPMC_A[26]/ **EDMA_EVT0**/ GP1[31]	W28	I	IPU DVDD_GPMC	GPMC, GP1 PINCNTL133 DSIS: PIN MM: MUX0	

(1) I = Input, O = Output, Z = High impedance, S = Supply voltage, GND = Ground, A = Analog signal, MM = Multi Muxed, DSIS = De-selected Input State
(2) IPD = Internal Pulldown Active, IPU = Internal Pullup Active, DIS = Internal Pull Disabled. This represents the default state of the Internal Pull after Reset. For more detailed information on pullup/pulldown resistors and situations where external pullup/pulldown resistors are required, see Section 4.5.1, *Pullup/Pulldown Resistors* and the Section 7.3.17, *Pin Behaviors at Reset*.
(3) Specifies the operating I/O supply voltage for each signal

Copyright © 2011–2013, Texas Instruments Incorporated

3.2.6 EMAC [(R)(G)MII Modes] and MDIO

Table 3-7. EMAC[0] Terminal Functions [(R)(G)MII]

SIGNAL NAME	NO.	TYPE(1)	OTHER(2) (3)	MUXED	DESCRIPTION
EMAC[0] (G)MII Mode					
An EMAC bootmode must be selected via the BTMODE[4:0] pins. Once the EMAC bootmode is selected, the BTMODE[9:8] pins determine the Ethernet PHY Mode Selection (for example, 00b is MII mode). For more detailed information on EMAC bootmodes and Ethernet PHY Mode selection, see Section 4.2.6, *Ethernet PHY Mode Selection*. These pin functions are available *only* when GMII or MII modes are selected.					
EMAC[0]_MCOL/ EMAC[0]_RGRXCTL/ VIN[1]B_D[1]/ EMAC[0]_RMRXD[0]/ GP3[24]	L23	I	IPD DVDD_GPMC	EMAC[0], VIN[1]B, GP3 PINCNTL236 DSIS: 0	[G]MII Collision Detect (Sense) input
EMAC[0]_MCRS/ EMAC[0]_RGRXD[2]/ VIN[1]B_D[2]/ EMAC[0]_RMRXD[1]/ GP3[25]	R25	I	IPD DVDD_GPMC	EMAC[0], VIN[1]B, GP3 PINCNTL237 DSIS: 0	[G]MII Carrier Sense input
EMAC[0]_GMTCLK/ EMAC[1]_RGRXC/ GPMC_A[6]/ SPI[2]_D[1]	K23	O	IPD DVDD_GPMC	EMAC[1], GPMC, SPI[2] PINCNTL249 DSIS: N/A	GMII Source Synchronous Transmit Clock
EMAC[0]_MRCLK/ EMAC[0]_RGTXC/ VIN[1]B_D[4]/ EMAC[0]_RMCRSDV/ SPI[3]_SCS[2]/ GP3[27]	H27	I	IPD DVDD_GPMC	EMAC[0], VIN[1]B, SPI[3], GP3 PINCNTL239 DSIS: 0	[G]MII Receive Clock

(1) I = Input, O = Output, Z = High impedance, S = Supply voltage, GND = Ground, A = Analog signal, MM = Multi Muxed, DSIS = De-selected Input State
(2) IPD = Internal Pulldown Active, IPU = Internal Pullup Active, DIS = Internal Pull Disabled. This represents the default state of the Internal Pull after Reset. For more detailed information on pullup/pulldown resistors and situations where external pullup/pulldown resistors are required, see Section 4.5.1, *Pullup/Pulldown Resistors* and Section 7.3.17, *Pin Behaviors at Reset*.
(3) Specifies the operating I/O supply voltage for each signal

Copyright © 2011–2013, Texas Instruments Incorporated

Table 3-7. EMAC[0] Terminal Functions [(R)(G)MII] (continued)

SIGNAL NAME	NO.	TYPE[1]	OTHER[2] [3]	MUXED	DESCRIPTION
EMAC[0]_MRXD[7]/ EMAC[0]_RGTXD[1]/ GPMC_A[4]/ SPI[2]_SCS[3]	G27	I	IPD DVDD_GPMC	EMAC[0], GPMC, SPI[2] PINCNTL247 DSIS: PIN	[G]MII Receive Data [7:0]. For 1000 EMAC GMII operation, EMAC[0]_RXD[7:0] are used. For 10/100 EMAC MII operation, *only* EMAC[0]_RXD[3:0] are used.
EMAC[0]_MRXD[6]/ EMAC[0]_RGTXD[2]/ GPMC_A[3]/ UART5_RTS	F28			EMAC[0], GPMC, UART5 PINCNTL246 DSIS: PIN	
EMAC[0]_MRXD[5]/ EMAC[0]_RGTXD[3]/ GPMC_A[2]/ UART5_CTS	H26			EMAC[0], GPMC, UART5 PINCNTL245 DSIS: PIN	
EMAC[0]_MRXD[4]/ EMAC[0]_RGRXD[3]/ GPMC_A[1]/ UART5_TXD	T23			EMAC[0], GPMC, UART5 PINCNTL244 DSIS: PIN	
EMAC[0]_MRXD[3]/ EMAC[1]_RGRXCTL/ GPMC_A[27]/ GPMC_A[26]/ GPMC_A[0]/ UART5_RXD	J25			EMAC[1], GPMC, UART5 PINCNTL243 DSIS: PIN	
EMAC[0]_MRXD[2]/ EMAC[0]_RGRXD[1]/ VIN[1]B_D[7]/ EMAC[0]_RMTXEN/ GP3[30]	R23			EMAC[0], VIN[1]B, GP3 PINCNTL242 DSIS: PIN	
EMAC[0]_MRXD[1]/ EMAC[0]_RGRXD[0]/ VIN[1]B_D[6]/ EMAC[0]_RMTXD[1]/ GP3[29]	P23			EMAC[0], VIN[1]B, GP3 PINCNTL241 DSIS: PIN	
EMAC[0]_MRXD[0]/ EMAC[0]_RGTXD[0]/ VIN[1]B_D[5]/ EMAC[0]_RMTXD[0]/ GP3[28]	G28			EMAC[0], VIN[1]B, GP3 PINCNTL240 DSIS: PIN	
EMAC[0]_MRXDV/ EMAC[1]_RGRXD[1]/ GPMC_A[5]/ SPI[2]_SCLK	K22	I	IPD DVDD_GPMC	EMAC[1], GPMC, SPI[2] PINCNTL248 DSIS: 0	[G]MII Receive Data Valid input
EMAC[0]_MRXER/ EMAC[0]_RGTXCTL/ VIN[1]B_D[3]/ EMAC[0]_RMRXER/ GP3[26]	J26	I	IPD DVDD_GPMC	EMAC[0], VIN[1]B, GP3 PINCNTL238 DSIS: 0	[G]MII Receive Data Error input
EMAC[0]_MTCLK/ EMAC[0]_RGRXC/ VIN[1]B_D[0]/ SPI[3]_SCS[3]/ I2C[2]_SDA/ GP3[23]	L24	I	IPD DVDD_GPMC	EMAC[0], VIN[1]B, SPI[3], I2C[2], GP3 PINCNTL235 DSIS: 0	[G]MII Transmit Clock input

Copyright © 2011–2013, Texas Instruments Incorporated

Table 3-7. EMAC[0] Terminal Functions [(R)(G)MII] (continued)

SIGNAL NAME	NO.	TYPE(1)	OTHER(2) (3)	MUXED	DESCRIPTION
EMAC[0]_MTXD[7]/ EMAC[1]_RGTXD[3]/ EMAC[1]_RMTXD[1]/ GPMC_A[14]/ UART1_CTS	H24	O	IPD DVDD_GPMC	EMAC[1], GPMC, UART1 PINCNTL257 DSIS: N/A	[G]MII Transmit Data [7:0]. For 1000 EMAC GMII operation, EMAC[0]_TXD[7:0] are used. For 10/100 EMAC MII operation, *only* EMAC[0]_TXD[3:0] are used.
EMAC[0]_MTXD[6]/ EMAC[1]_RGRXD[0]/ EMAC[1]_RMTXD[0]/ GPMC_A[13]/ UART1_TXD	J22			EMAC[1], GPMC, UART1 PINCNTL256 DSIS: N/A	
EMAC[0]_MTXD[5]/ EMAC[1]_RGTXC/ EMAC[1]_RMCRSDV/ GPMC_A[12]/ UART1_RXD	F27			EMAC[1], GPMC, UART1 PINCNTL255 DSIS: N/A	
EMAC[0]_MTXD[4]/ EMAC[1]_RGTXD[2]/ EMAC[1]_RMRXER/ GPMC_A[11]/ UART4_RTS	G23			EMAC[1], GPMC, UART4 PINCNTL254 DSIS: N/A	
EMAC[0]_MTXD[3]/ EMAC[1]_RGTXD[0]/ EMAC[1]_RMRXD[1]/ GPMC_A[10]/ UART4_CTS	H23			EMAC[1], GPMC, UART4 PINCNTL253 DSIS: N/A	
EMAC[0]_MTXD[2]/ EMAC[1]_RGTXCTL/ EMAC[1]_RMRXD[0]/ GPMC_A[9]/ UART4_TXD	H22			EMAC[1], GPMC, UART4 PINCNTL252 DSIS: N/A	
EMAC[0]_MTXD[1]/ EMAC[1]_RGTXD[1]/ GPMC_A[8]/ UART4_RXD	H25			EMAC[1], GPMC, UART4 PINCNTL251 DSIS: N/A	
EMAC[0]_MTXD[0]/ EMAC[1]_RGRXD[3]/ GPMC_A[7]/ SPI[2]_D[0]	J24			EMAC[1], GPMC, UART4 PINCNTL250 DSIS: N/A	
EMAC[0]_MTXEN/ EMAC[1]_RGRXD[2]/ EMAC[1]_RMTXEN/ GPMC_A[15]/ UART1_RTS	J23	O	IPD DVDD_GPMC	EMAC[1], GPMC, UART4 PINCNTL258 DSIS: N/A	[G]MII Transmit Data Enable output
EMAC[0] RMII Mode					
An EMAC bootmode must be selected via the BTMODE[4:0] pins. Once the EMAC bootmode is selected, the BTMODE[9:8] pins determine the Ethernet PHY Mode Selection (for example, 01b is RMII mode). For more detailed information on EMAC bootmodes and Ethernet PHY Mode selection, see Section 4.2.6, *Ethernet PHY Mode Selection*. These pin functions are available *only* when RMII mode is selected.					
EMAC_RMREFCLK/ TIM2_IO/ GP1[10]	J27	I/O	IPD DVDD_GPMC	TIMER2, GP1 PINCNTL232 DSIS: PIN	RMII Reference Clock (EMAC[0] and EMAC[1] RMII mode) Regardless of EMAC[0] RMII Mode, the GMII_EN bit in the MACCONTROL register, of the Control Module, configures the RMREFCLK pin function as an INPUT or OUTPUT clock reference. During RMII ROM Boot, the RMREFCLK pin function is configured as an OUTPUT clock reference (driving 50 MHz).

Table 3-7. EMAC[0] Terminal Functions [(R)(G)MII] (continued)

SIGNAL NAME	NO.	TYPE[1]	OTHER[2] [3]	MUXED	DESCRIPTION
EMAC[0]_MRCLK/ EMAC[0]_RGTXC/ VIN[1]B_D[4]/ **EMAC[0]_RMCRSDV**/ SPI[3]_SCS[2]/ GP3[27]	H27	I	IPD DVDD_GPMC	EMAC[0], VIN[1]B, SPI[3], GP3 PINCNTL239 DSIS: 0	RMII Carrier Sense input
EMAC[0]_MCRS/ EMAC[0]_RGRXD[2]/ VIN[1]B_D[2]/ **EMAC[0]_RMRXD[1]**/ GP3[25]	R25	I	IPD DVDD_GPMC	EMAC[0], VIN[1]B, SPI[3], GPI3 PINCNTL237 DSIS: PIN	RMII Receive Data [1:0]. For 10/100 EMAC RMII operation, EMAC[0]_RMRXD[1:0] are used.
EMAC[0]_MCOL/ EMAC[0]_RGRXCTL/ VIN[1]B_D[1]/ **EMAC[0]_RMRXD[0]**/ GP3[24]	L23	I	IPD DVDD_GPMC	EMAC[0], VIN[1]B, GP3 PINCNTL236 DSIS: PIN	
EMAC[0]_MRXER/ EMAC[0]_RGTXCTL/ VIN[1]B_D[3]/ **EMAC[0]_RMRXER**/ GP3[26]	J26	I	IPD DVDD_GPMC	EMAC[0], VIN[1]B, GP3 PINCNTL238 DSIS: 0	RMII Receive Data Error input
EMAC[0]_MRXD[1]/ EMAC[0]_RGRXD[0]/ VIN[1]B_D[6]/ **EMAC[0]_RMTXD[1]**/ GP3[29]	P23	O	IPD DVDD_GPMC	EMAC[0], VIN[1]B, GP3 PINCNTL241 DSIS: N/A	RMII Transmit Data [7:0]. For 10/100 EMAC RMII operation, EMAC[0]_RMTXD[1:0] are used.
EMAC[0]_MRXD[0]/ EMAC[0]_RGTXD[0]/ VIN[1]B_D[5]/ **EMAC[0]_RMTXD[0]**/ GP3[28]	G28	O	IPD DVDD_GPMC	EMAC[0], VIN[1]B, GP3 PINCNTL240 DSIS: N/A	
EMAC[0]_MRXD[2]/ EMAC[0]_RGRXD[1]/ VIN[1]B_D[7]/ **EMAC[0]_RMTXEN**/ GP3[30]	R23	O	IPD DVDD_GPMC	EMAC[0], VIN[1]B, GP3 PINCNTL242 DSIS: N/A	RMII Transmit Data Enable output
EMAC[0] RGMII Mode					
An EMAC bootmode must be selected via the BTMODE[4:0] pins. Once the EMAC bootmode is selected, the BTMODE[9:8] pins determine the Ethernet PHY Mode Selection (for example, 10b is RGMII mode). For more detailed information on EMAC bootmodes and Ethernet PHY Mode selection, see Section 4.2.6, *Ethernet PHY Mode Selection* These pin functions are available *only* when RGMII mode is selected.					
EMAC[0]_MTCLK/ **EMAC[0]_RGRXC**/ VIN[1]B_D[0]/ SPI[3]_SCS[3]/ I2C[2]_SDA/ GP3[23]	L24	I	IPD DVDD_GPMC	EMAC[0], VIN[1]B, SPI[3], I2C[2], GP3 PINCNTL235 DSIS: PIN	RGMII Receive Clock
EMAC[0]_MCOL/ **EMAC[0]_RGRXCTL**/ VIN[1]B_D[1]/ EMAC[0]_RMRXD[0]/ GP3[24]	L23	I	IPD DVDD_GPMC	EMAC[0], VIN[1]B, GP3 PINCNTL236 DSIS: PIN	RGMII Receive Control

Copyright © 2011–2013, Texas Instruments Incorporated

Table 3-7. EMAC[0] Terminal Functions [(R)(G)MII] (continued)

SIGNAL NAME	NO.	TYPE(1)	OTHER(2) (3)	MUXED	DESCRIPTION
EMAC[0]_MRXD[4]/ **EMAC[0]_RGRXD[3]**/ GPMC_A[1]/ UART5_TXD	T23	I	IPD DVDD_GPMC	EMAC[0], GPMC, UART5 PINCNTL244 DSIS: PIN	RGMII Receive Data [3:0]
EMAC[0]_MCRS/ **EMAC[0]_RGRXD[2]**/ VIN[1]B_D[2]/ EMAC[0]_RMRXD[1]/ GP3[25]	R25	I	IPD DVDD_GPMC	EMAC[0], VIN[1]B, GP3 PINCNTL237 DSIS: PIN	
EMAC[0]_MRXD[2]/ **EMAC[0]_RGRXD[1]**/ VIN[1]B_D[7]/ EMAC[0]_RMTXEN/ GP3[30]	R23	I	IPD DVDD_GPMC	EMAC[0], VIN[1]B, GP3 PINCNTL242 DSIS: PIN	
EMAC[0]_MRXD[1]/ **EMAC[0]_RGRXD[0]**/ VIN[1]B_D[6]/ EMAC[0]_RMTXD[1]/ GP3[29]	P23	I	IPD DVDD_GPMC	EMAC[0], VIN[1]B, GP3 PINCNTL241 DSIS: PIN	
EMAC[0]_MRCLK/ **EMAC[0]_RGTXC**/ VIN[1]B_D[4]/ EMAC[0]_RMCRSDV/ SPI[3]_SCS[2]/ GP3[27]	H27	O	IPD DVDD_GPMC	EMAC[0], VIN[1]B, SPI[3], GP3 PINCNTL239 DSIS: N/A	RGMII Transmit Clock
EMAC[0]_MRXER/ **EMAC[0]_RGTXCTL**/ VIN[1]B_D[3]/ EMAC[0]_RMRXER/ GP3[26]	J26	O	IPD DVDD_GPMC	EMAC[0], VIN[1]B, GP3 PINCNTL238 DSIS: N/A	RGMII Transmit Enable
EMAC[0]_MRXD[5]/ **EMAC[0]_RGTXD[3]**/ GPMC_A[2]/ UART5_CTS	H26	O	IPD DVDD_GPMC	EMAC[0], GPMC, UART5 PINCNTL245 DSIS: N/A	RGMII Transmit Data [3:0]
EMAC[0]_MRXD[6]/ **EMAC[0]_RGTXD[2]**/ GPMC_A[3]/ UART5_RTS	F28	O	IPD DVDD_GPMC	EMAC[0], GPMC, UART5 PINCNTL246 DSIS: N/A	
EMAC[0]_MRXD[7]/ **EMAC[0]_RGTXD[1]**/ GPMC_A[4]/ SPI[2]_SCS[3]	G27	O	IPD DVDD_GPMC	EMAC[0], GPMC, SPI[2] PINCNTL247 DSIS: N/A	
EMAC[0]_MRXD[0]/ **EMAC[0]_RGTXD[0]**/ VIN[1]B_D[5]/ EMAC[0]_RMTXD[0]/ GP3[28]	G28	O	IPD DVDD_GPMC	EMAC[0], VIN[1]B, GP3 PINCNTL240 DSIS: N/A	

Copyright © 2011–2013, Texas Instruments Incorporated

Table 3-8. EMAC[1] Terminal Functions [(R)(G)MII]

SIGNAL NAME	NO.	TYPE(1)	OTHER(2) (3)	MUXED	DESCRIPTION
EMAC[1] (G)MII Mode					
An EMAC bootmode must be selected via the BTMODE[4:0] pins. Once the EMAC bootmode is selected, the BTMODE[9:8] pins determine the Ethernet PHY Mode Selection (for example, 00b is MII mode). For more detailed information on EMAC bootmodes and Ethernet PHY Mode selection, see Section 4.2.6, *Ethernet PHY Mode Selection*. These pin functions are available *only* when GMII and MII modes are selected.					
VOUT[1]_HSYNC/ **EMAC[1]_MCOL/** VIN[1]A_VSYNC/ SPI[3]_D[1]/ UART3_RTS/ GP2[29]	AC24	I	IPD DVDD	VOUT[1], VIN[1]A, SPI[3], UART3, GP2 PINCNTL205 DSIS: 0	[G]MII Collision Detect (Sense) input
VOUT[1]_VSYNC/ **EMAC[1]_MCRS/** VIN[1]A_FLD/ VIN[1]A_DE/ SPI[3]_D[0]/ UART3_CTS/ GP2[30]	AA23	I	IPD DVDD	VOUT[1], VIN[1]A, SPI[3], UART3, GP2 PINCNTL206 DSIS: 0	[G]MII Carrier Sense input
VOUT[1]_G_Y_YC[6]/ **EMAC[1]_GMTCLK/** VIN[1]A_D[11]/ GP3[10]	AH27	O	IPD DVDD	VOUT[1], VIN[1]A, GP3 PINCNTL218 DSIS: N/A	GMII Source Synchronous Transmit Clock
VOUT[1]_B_CB_C[3]/ **EMAC[1]_MRCLK/** VIN[1]A_D[0]/ UART4_CTS/ GP3[0]	AH25	I	IPD DVDD	VOUT[1], VIN[1]A, UART4, GP3 PINCNTL208 DSIS: 0	[G]MII Receive Clock

(1) I = Input, O = Output, Z = High impedance, S = Supply voltage, GND = Ground, A = Analog signal, MM = Multi Muxed, DSIS = De-selected Input State
(2) IPD = Internal Pulldown Active, IPU = Internal Pullup Active, DIS = Internal Pull Disabled. This represents the default state of the Internal Pull after Reset. For more detailed information on pullup/pulldown resistors and situations where external pullup/pulldown resistors are required, see Section 4.5.1, *Pullup/Pulldown Resistors* and the Section 7.3.17, *Pin Behaviors at Reset*.
(3) Specifies the operating I/O supply voltage for each signal

Copyright © 2011–2013, Texas Instruments Incorporated

Table 3-8. EMAC[1] Terminal Functions [(R)(G)MII] (continued)

SIGNAL NAME	NO.	TYPE(1)	OTHER(2) (3)	MUXED	DESCRIPTION
VOUT[1]_G_Y_YC[4]/ **EMAC[1]_MRXD[7]/** VIN[1]A_D[9]/ GP3[8]	W22	I	IPD DVDD	VOUT[1], VIN[1]A, GP3 PINCNTL216 DSIS: PIN	[G]MII Receive Data [7:0]. For 1000 EMAC GMII operation, EMAC[0]_RXD[7:0] are used. For 10/100 EMAC MII operation, *only* EMAC[0]_RXD[3:0] are used.
VOUT[1]_G_Y_YC[3]/ **EMAC[1]_MRXD[6]/** VIN[1]A_D[8]/ GP3[7]	Y23			VOUT[1], VIN[1]A, GP3 PINCNTL215 DSIS: PIN	
VOUT[1]_B_CB_C[9]/ **EMAC[1]_MRXD[5]/** VIN[1]A_D[6]/ I2C[3]_SDA/ GP3[6]	AA24			VOUT[1], VIN[1]A, I2C[3], GP3 PINCNTL214 DSIS: PIN	
VOUT[1]_B_CB_C[8]/ **EMAC[1]_MRXD[4]/** VIN[1]A_D[5]/ I2C[3]_SCL/ GP3[5]	AH26			VOUT[1], VIN[1]A, I2C[3], GP3 PINCNTL213 DSIS: PIN	
VOUT[1]_B_CB_C[7]/ **EMAC[1]_MRXD[3]/** VIN[1]A_D[4]/ UART3_TXD/ GP3[4]	AC25			VOUT[1], VIN[1]A, UART3, GP3 PINCNTL212 DSIS: PIN	
VOUT[1]_B_CB_C[6]/ **EMAC[1]_MRXD[2]/** VIN[1]A_D[3]/ UART3_RXD/ GP3[3]	AD25			VOUT[1], VIN[1]A, UART3, GP3 PINCNTL211 DSIS: PIN	
VOUT[1]_B_CB_C[5]/ **EMAC[1]_MRXD[1]/** VIN[1]A_D[2]/ UART4_TXD/ GP3[2]	AF25			VOUT[1], VIN[1]A, UART4, GP3 PINCNTL210 DSIS: PIN	
VOUT[1]_B_CB_C[4]/ **EMAC[1]_MRXD[0]/** VIN[1]A_D[1]/ UART4_RXD/ GP3[1]	AG25			VOUT[1], VIN[1]A, UART4, GP3 PINCNTL209 DSIS: PIN	
VOUT[1]_G_Y_YC[5]/ **EMAC[1]_MRXDV/** VIN[1]A_D[10]/ GP3[9]	AG26	I	IPD DVDD	VOUT[1], VIN[1]A, GP3 PINCNTL217 DSIS: 0	[G]MII Receive Data Valid input
VOUT[1]_AVID/ **EMAC[1]_MRXER/** VIN[1]A_CLK/ UART4_RTS/ TIM6_IO/ GP2[31]	Y22	I	IPD DVDD	VOUT[1], VIN[1]A, UART4, TIMER 6, GP2 PINCNTL207 DSIS: 0	[G]MII Receive Data Error input
VOUT[1]_CLK/ **EMAC[1]_MTCLK/** VIN[1]A_HSYNC/ GP2[28]	AE24	I	IPD DVDD	VOUT[1], VIN[1]A, GP2 PINCNTL204 DSIS: 0	[G]MII Transmit Clock input

Table 3-8. EMAC[1] Terminal Functions [(R)(G)MII] (continued)

SIGNAL NAME	NO.	TYPE(1)	OTHER(2) (3)	MUXED	DESCRIPTION
VOUT[1]_R_CR[8]/ **EMAC[1]_MTXD[7]**/ VIN[1]A_D[19]/ UART5_RXD/ GP3[18]	W23	O	IPD DVDD	VOUT[1], VIN[1]A, UART5, GP3 PINCNTL226 DSIS: N/A	[G]MII Transmit Data [7:0]. For 1000 EMAC GMII operation, EMAC[0]_TXD[7:0] are used. For 10/100 EMAC MII operation, *only* EMAC[0]_TXD[3:0] are used.
VOUT[1]_R_CR[7]/ **EMAC[1]_MTXD[6]**/ VIN[1]A_D[18]/ SPI[3]_D[0]/ GP3[17]	V22			VOUT[1], VIN[1]A, SPI[3], GP3 PINCNTL225 DSIS: N/A	
VOUT[1]_R_CR[6]/ **EMAC[1]_MTXD[5]**/ VIN[1]A_D[17]/ SPI[3]_D[1]/ GP3[16]	AA25			VOUT[1], VIN[1]A, SPI[3], GP3 PINCNTL224 DSIS: N/A	
VOUT[1]_R_CR[5]/ **EMAC[1]_MTXD[4]**/ VIN[1]A_D[16]/ SPI[3]_SCLK/ GP3[15]	AC26			VOUT[1], VIN[1]A, SPI[3], GP3 PINCNTL223 DSIS: N/A	
VOUT[1]_R_CR[4]/ **EMAC]1]_MTXD[3]**/ VIN]1]A_D[15]/ SPI[3]_SCS[1]/ GP3[14]	AG27			VOUT[1], VIN[1]A, SPI[3], GP3 PINCNTL222 DSIS: N/A	
VOUT[1]_G_Y_YC[9]/ **EMAC[1]_MTXD[2]**/ VIN[1]A_D[14]/ GP3[13]	AD26			VOUT[1], VIN[1]A, GP3 PINCNTL221 DSIS: N/A	
VOUT[1]_G_Y_YC[8]/ **EMAC[1]_MTXD[1]**/ VIN[1]A_D[13]/ GP3[12]	AE26			VOUT[1], VIN[1]A, GP3 PINCNTL220 DSIS: N/A	
VOUT[1]_G_Y_YC[7]/ **EMAC[1]_MTXD[0]**/ VIN[1]A_D[12]/ GP3[11]	AF26			VOUT[1], VIN[1]A, GP3 PINCNTL219 DSIS: N/A	
VOUT[1]_R_CR[9]/ **EMAC[1]_MTXEN**/ VIN[1]A_D[20]/ UART5_TXD/ GP3[19]	Y24	O	IPD DVDD	VOUT[1], VIN[1]A, UART5, GP3 PINCNTL227 DSIS: N/A	[G]MII Transmit Data Enable output
EMAC[1] RMII Mode					
An EMAC bootmode must be selected via the BTMODE[4:0] pins. Once the EMAC bootmode is selected, the BTMODE[9:8] pins determine the Ethernet PHY Mode Selection (for example, 01b is RMII mode). For more detailed information on EMAC bootmodes and Ethernet PHY Mode selection, see Section 4.2.6, *Ethernet PHY Mode Selection*. These pin functions are available *only* when RMII mode is selected.					
EMAC_RMREFCLK/ TIM2_IO/ GP1[10]	J27	I/O	IPD DVDD_GPMC	TIMER2, GP1 PINCNTL232 DSIS: PIN	RMII Reference Clock (EMAC[0] and EMAC[1] RMII mode)

Copyright © 2011–2013, Texas Instruments Incorporated

Table 3-8. EMAC[1] Terminal Functions [(R)(G)MII] (continued)

SIGNAL NAME	NO.	TYPE(1)	OTHER(2) (3)	MUXED	DESCRIPTION
VIN[0]A_D[20]/ CAM_D[12]/ **EMAC[1]_RMCRSDV**/ SPI[3]_SCS[0]/ GP0[14]	AC17	I	IPD DVDD_C	VIN[0]A, CAMERA_I/F, SPI[3], GP0 PINCNTL160 DSIS: 0 MM: MUX1	RMII Carrier Sense input
EMAC[0]_MTXD[5]/ EMAC[1]_RGTXC/ **EMAC[1]_RMCRSDV**/ GPMC_A[12]/ UART1_RXD	F27	I	IPD DVDD_GPMC	EMAC[0], EMAC[1], GPMC, UART1 PINCNTL255 DSIS: 0 MM: MUX0	
VIN[0]A_D[18]/ CAM_D[10]/ **EMAC[1]_RMRXD[1]**/ I2C[3]_SCL/ GP0[12]	AF20	I	IPU DVDD_C	VIN[0]A, CAMERA_I/F, I2C[3], GP0 PINCNTL158 DSIS: PIN MM: MUX1	RMII Receive Data [1:0].
EMAC[0]_MTXD[3]/ EMAC[1]_RGTXD[0]/ **EMAC[1]_RMRXD[1]**/ GPMC_A[10]/ UART4_CTS	H23	I	IPD DVDD_GPMC	EMAC[0], EMAC[1], GPMC, UART4 PINCNTL253 DSIS: PIN MM: MUX0	
VIN[0]A_D[19]/ CAM_D[11]/ **EMAC[1]_RMRXD[0]**/ I2C[3]_SDA/ GP0[13]	AF21	I	IPU DVDD_C	VIN[0]A, CAMERA_I/F, I2C[3], GP0 PINCNTL159 DSIS: PIN MM: MUX1	
EMAC[0]_MTXD[2]/ EMAC[1]_RGTXCTL/ **EMAC[1]_RMRXD[0]**/ GPMC_A[9]/ UART4_TXD	H22	I	IPD DVDD_GPMC	EMAC[0], EMAC[1], GPMC, UART4 PINCNTL252 DSIS: PIN MM: MUX0	
VIN[0]A_D[17]/ CAM_D[9]/ **EMAC[1]_RMRXER**/ GP0[11]	AB21	I	IPD DVDD_C	VIN[0]A, CAMERA_I/F, SPI[3], GP0 PINCNTL157 DSIS: 0 MM: MUX1	RMII Receive Data Error input
EMAC[0]_MTXD[4]/ EMAC[1]_RGTXD[2]/ **EMAC[1]_RMRXER**/ GPMC_A[11]/ UART4_RTS	G23	I	IPD DVDD_GPMC	EMAC[0], EMAC[1], GPMC, UART1 PINCNTL254 DSIS: 0 MM: MUX0	

Table 3-8. EMAC[1] Terminal Functions [(R)(G)MII] (continued)

SIGNAL NAME	NO.	TYPE(1)	OTHER(2) (3)	MUXED	DESCRIPTION
VIN[0]A_D[22]/ CAM_D[14]/ **EMAC[1]_RMTXD[1]**/ SPI[3]_D[1]/ GP0[16]	AC21	O	IPD DVDD_C	VIN[0]A, CAMERA_I/F, SPI[3], GP0 PINCNTL162 DSIS: N/A MM: MUX1	RMII Transmit Data [1:0].
EMAC[0]_MTXD[7]/ EMAC[1]_RGTXD[3]/ **EMAC[1]_RMTXD[1]**/ GPMC_A[14]/ UART1_CTS	H24	O	IPD DVDD_GPMC	EMAC[0], GPMC, UART1 PINCNTL257 DSIS: N/A MM: MUX0	
VIN[0]A_D[21]/ CAM_D[13]/ **EMAC[1]_RMTXD[0]**/ SPI[3]_SCLK/ GP0[15]	AE18	O	IPD DVDD_C	VIN[0]A CAMERA_I/F, SPI[3], GP0 PINCNTL161 DSIS: N/A MM: MUX1	
EMAC[0]_MTXD[6]/ EMAC[1]_RGRXD[0]/ **EMAC[1]_RMTXD[0]**/ GPMC_A[13]/ UART1_TXD	J22	O	IPD DVDD_GPMC	EMAC[0], EMAC[1], GPMC, UART1 PINCNTL256 DSIS: N/A MM: MUX0	
VIN[0]A_D[23]/ CAM_D[15]/ **EMAC[1]_RMTXEN**/ SPI[3]_D[0]/ GP0[17]	AC16	O	IPD DVDD_C	VIN[0]A, CAMERA_I/F, SPI[3], GP0 PINCNTL163 DSIS: N/A MM: MUX1	RMII Transmit Data Enable output
EMAC[0]_MTXEN/ EMAC[1]_RGRXD[2]/ **EMAC[1]_RMTXEN**/ GPMC_A[15]/ UART1_RTS	J23	O	IPD DVDD_GPMC	EMAC[0], EMAC[1], GPMC, UART1 PINCNTL258 DSIS: N/A MM: MUX0	
EMAC[1] RGMII MODE					
An EMAC bootmode must be selected via the BTMODE[4:0] pins. Once the EMAC bootmode is selected, the BTMODE[9:8] pins determine the Ethernet PHY Mode Selection (for example, 10b is RGMII mode). For more detailed information on EMAC bootmodes and Ethernet PHY Mode selection, see Section 4.2.6, *Ethernet PHY Mode Selection* These pin functions are available *only* when RGMII mode is selected.					
EMAC[0]_GMTCLK/ **EMAC[1]_RGRXC**/ GPMC_A[6]/ SPI[2]_D[1]	K23	I	IPD DVDD_GPMC	EMAC[0], GPMC, SPI[2] PINCNTL249 DSIS: PIN	RGMII Receive Clock
EMAC[0]_MRXD[3]/ **EMAC[1]_RGRXCTL**/ GPMC_A[27]/ GPMC_A[26]/ GPMC_A[0]/ UART5_RXD	J25	I	IPD DVDD_GPMC	EMAC[0], GPMC, UART5 PINCNTL243 DSIS: PIN	RGMII Receive Control

Copyright © 2011–2013, Texas Instruments Incorporated

Table 3-8. EMAC[1] Terminal Functions [(R)(G)MII] (continued)

SIGNAL NAME	NO.	TYPE(1)	OTHER(2) (3)	MUXED	DESCRIPTION
EMAC[0]_MTXD[0]/ **EMAC[1]_RGRXD[3]**/ GPMC_A[7]/ SPI[2]_D[0]	J24	I	IPD DVDD_GPMC	EMAC[0], GPMC, UART4 PINCNTL250 DSIS: PIN	RGMII Receive Data [3:0]
EMAC[0]_MTXEN/ **EMAC[1]_RGRXD[2]**/ EMAC[1]_RMTXEN/ GPMC_A[15]/ UART1_RTS	J23	I	IPD DVDD_GPMC	EMAC[0], GPMC, UART4 PINCNTL258 DSIS: PIN	
EMAC[0]_MRXDV/ **EMAC[1]_RGRXD[1]**/ GPMC_A[5]/ SPI[2]_SCLK	K22	I	IPD DVDD_GPMC	EMAC[0], GPMC, SPI[2] PINCNTL248 DSIS: PIN	
EMAC[0]_MTXD[6]/ **EMAC[1]_RGRXD[0]**/ EMAC[1]_RMTXD[0]/ GPMC_A[13]/ UART1_TXD	J22	I	IPD DVDD_GPMC	EMAC[0], GPMC, UART1 PINCNTL256 DSIS: PIN	
EMAC[0]_MTXD[5]/ **EMAC[1]_RGTXC**/ EMAC[1]_RMCRSDV/ GPMC_A[12]/ UART1_RXD	F27	O	IPD DVDD_GPMC	EMAC[0], GPMC, UART1 PINCNTL255 DSIS: N/A	RGMII Transmit Clock
EMAC[0]_MTXD[2]/ **EMAC[1]_RGTXCTL**/ EMAC[1]_RMRXD[0]/ GPMC_A[9]/ UART4_TXD	H22	O	IPD DVDD_GPMC	EMAC[0], GPMC, UART4 PINCNTL252 DSIS: N/A	RGMII Transmit Enable
EMAC[0]_MTXD[7]/ **EMAC[1]_RGTXD[3]**/ EMAC[1]_RMTXD[1]/ GPMC_A[14]/ UART1_CTS	H24	O	IPD DVDD_GPMC	EMAC[0], GPMC, UART1 PINCNTL257 DSIS: N/A	RGMII Transmit Data [3:0]
EMAC[0]_MTXD[4]/ **EMAC[1]_RGTXD[2]**/ EMAC[1]_RMRXER/ GPMC_A[11]/ UART4_RTS	G23	O	IPD DVDD_GPMC	EMAC[0], GPMC, UART4 PINCNTL254 DSIS: N/A	
EMAC[0]_MTXD[1]/ **EMAC[1]_RGTXD[1]**/ GPMC_A[8]/ UART4_RXD	H25	O	IPD DVDD_GPMC	EMAC[0], GPMC, UART4 PINCNTL251 DSIS: N/A	
EMAC[0]_MTXD[3]/ **EMAC[1]_RGTXD[0]**/ EMAC[1]_RMRXD[1]/ GPMC_A[10]/ UART4_CTS	H23	O	IPD DVDD_GPMC	EMAC[0], EMAC[1], GPMC, UART4 PINCNTL253 DSIS: N/A	

Table 3-9. MDIO Terminal Functions

SIGNAL NAME	SIGNAL NO.	TYPE(1)	OTHER(2) (3)	MUXED	DESCRIPTION
MDIO					
MDCLK/ GP1[11]	H28	O	IPU DVDD_GPMC	GP1 PINCNTL233 DSIS: N/A	Management Data Serial Clock output
MDIO/ GP1[12]	P24	I/O	IPU DVDD_GPMC	GP1 PINCNTL234 DSIS: 1	Management Data I/O

(1) I = Input, O = Output, Z = High impedance, S = Supply voltage, GND = Ground, A = Analog signal, MM = Multi Muxed, DSIS = De-selected Input State
(2) IPD = Internal Pulldown Active, IPU = Internal Pullup Active, DIS = Internal Pull Disabled. This represents the default state of the Internal Pull after Reset. For more detailed information on pullup/pulldown resistors and situations where external pullup/pulldown resistors are required, see Section 4.5.1, *Pullup/Pulldown Resistors* and Section 7.3.17, *Pin Behaviors at Reset*.
(3) Specifies the operating I/O supply voltage for each signal

Copyright © 2011–2013, Texas Instruments Incorporated

3.2.7 General-Purpose Input/Outputs (GPIOs)

Table 3-10. GP0 Terminal Functions

SIGNAL NAME	NO.	TYPE(1)	OTHER(2) (3)	MUXED	DESCRIPTION
GPIO0					
Note: General-Purpose Input/Output (I/O) pins can also serve as external interrupt inputs.					
UART2_TXD/ **GP0[31]**	U3	I/O	IPD DVDD	UART2 PINCNTL61 DSIS: PIN	General-Purpose Input/Output (I/O) 0 [GP0] pin 31
TCLKIN/ **GP0[30]**	T2	I/O	IPD DVDD	TCLKIN PINCNTL60 DSIS: PIN	General-Purpose Input/Output (I/O) 0 [GP0] pin 30
UART2_RXD/ **GP0[29]**	U4	I/O	IPD DVDD	UART2 PINCNTL59 DSIS: PIN	General-Purpose Input/Output (I/O) 0 [GP0] pin 29
MCA[5]_AXR[1]/ MCA[4]_AXR[3]/ TIM7_IO/ **GP0[28]**	L6	I/O	IPD DVDD	MCA[5], MCA[4], TIMER7 PINCNTL58 DSIS: PIN MM: MUX1	General-Purpose Input/Output (I/O) 0 [GP0] pin 28
VOUT[1]_FLD/ CAM_FLD/ CAM_WE/ GPMC_A[11]/ UART2_CTS/ **GP0[28]**	AB23	I/O	IPD DVDD_C	VOUT[1], CAMERA_I/F, GPMC, UART2 PINCNTL174 DSIS: PIN MM: MUX0	
MCA[5]_AXR[0]/ MCA[4]_AXR[2]/ **GP0[27]**	L7	I/O	IPD DVDD	MCA[5], MCA[4] PINCNTL57 DSIS: PIN MM: MUX1	General-Purpose Input/Output (I/O) 0 [GP0] pin 27
VOUT[1]_B_CB_C[0]/ CAM_VS/ GPMC_A[10]/ UART2_TXD/ **GP0[27]**	AD23	I/O	IPU DVDD_C	VOUT[1], CAMERA_I/F, GPMC, UART2 PINCNTL173 DSIS: PIN MM: MUX0	
MCA[5]_AFSX/ **GP0[26]**	H5	I/O	IPD DVDD	MCA[5] PINCNTL56 DSIS: PIN MM: MUX1	General-Purpose Input/Output (I/O) 0 [GP0] pin 26
VOUT[1]_B_CB_C[1]/ CAM_HS/ GPMC_A[9]/ UART2_RXD/ **GP0[26]**	AE23	I/O	IPD DVDD_C	VOUT[1], CAMERA_I/F, GPMC, UART2 PINCNTL172 DSIS: PIN MM: MUX0	
MCA[5]_ACLKX/ **GP0[25]**	J3	I/O	IPD DVDD	MCA[5] PINCNTL55 DSIS: PIN MM: MUX1	General-Purpose Input/Output (I/O) 0 [GP0] pin 25
VOUT[1]_R_CR[0]/ CAM_D[0]/ GPMC_A[8]/ UART4_RTS/ **GP0[25]**	AA22	I/O	IPD DVDD_C	VOUT[1], CAMERA_I/F, GPMC, UART4 PINCNTL171 DSIS: PIN MM: MUX0	

(1) I = Input, O = Output, Z = High impedance, S = Supply voltage, GND = Ground, A = Analog signal, MM = Multi Muxed, DSIS = De-selected Input State
(2) IPD = Internal Pulldown Active, IPU = Internal Pullup Active, DIS = Internal Pull Disabled. This represents the default state of the Internal Pull after Reset. For more detailed information on pullup/pulldown resistors and situations where external pullup/pulldown resistors are required, see Section 4.5.1, *Pullup/Pulldown Resistors* and Section 7.3.17, *Pin Behaviors at Reset*.
(3) Specifies the operating I/O supply voltage for each signal

Copyright © 2011–2013, Texas Instruments Incorporated

Table 3-10. GP0 Terminal Functions (continued)

SIGNAL NAME	NO.	TYPE(1)	OTHER(2) (3)	MUXED	DESCRIPTION
MCA[4]_AXR[1]/ TIM6_IO/ **GP0[24]**	J4	I/O	IPD DVDD	MCA[4], TIMER6 PINCNTL54 DSIS: PIN MM: MUX1	General-Purpose Input/Output (I/O) 0 [GP0] pin 24
VOUT[1]_R_CR[1]/ CAM_D[1]/ GPMC_A[7]/ UART4_CTS/ **GP0[24]**	AC19	I/O	IPD DVDD_C	VOUT[1], CAMERA_I/F, GPMC, UART4 PINCNTL170 DSIS: PIN MM: MUX0	
MCA[4]_AXR[0]/ **GP0[23]**	H6	I/O	IPD DVDD	MCA[4] PINCNTL53 DSIS: PIN MM: MUX1	General-Purpose Input/Output (I/O) 0 [GP0] pin 23
VOUT[1]_G_Y_YC[0]/ CAM_D[2]/ GPMC_A[6]/ UART4_TXD/ **GP0[23]**	AC18	I/O	IPD DVDD_C	VOUT[1], CAMERA_I/F, GPMC, UART4 PINCNTL169 DSIS: PIN MM: MUX0	
MCA[4]_AFSX/ **GP0[22]**	H3	I/O	IPD DVDD	MCA[4] PINCNTL52 DSIS: PIN MM: MUX1	General-Purpose Input/Output (I/O) 0 [GP0] pin 22
VOUT[1]_G_Y_YC[1]/ CAM_D[3]/ GPMC_A[5]/ UART4_RXD/ **GP0[22]**	AD18	I/O	IPU DVDD_C	VOUT[1], CAMERA_I/F, GPMC, UART4 PINCNTL168 DSIS: PIN MM: MUX0	
MCA[4]_ACLKX/ **GP0[21]**	K7	I/O	IPD DVDD	MCA[4] PINCNTL51 DSIS: PIN MM: MUX1	General-Purpose Input/Output (I/O) 0 [GP0] pin 21
VIN[0]B_FLD/ CAM_D[4]/ **GP0[21]**	AD17	I/O	IPU DVDD_C	VIN[0]B, CAMERA_I/F PINCNTL167 DSIS: PIN MM: MUX0	
MCA[3]_AXR[2]/ MCA[1]_AXR[8]/ **GP0[20]**	F2	I/O	IPD DVDD	MCA[3], MCA[1] PINCNTL49 DSIS: PIN MM: MUX1	General-Purpose Input/Output (I/O) 0 [GP0] pin 20
VIN[0]A_FLD/ CAM_D[5]/ **GP0[20]**	AC22	I/O	IPU DVDD_C	VIN[0]A, CAMERA_I/F PINCNTL166 DSIS: PIN MM: MUX0	
MCA[3]_AXR[1]/ TIM5_IO/ **GP0[19]**	G2	I/O	IPD DVDD	MCA[3], TIMER5 PINCNTL48 DSIS: PIN MM: MUX1	General-Purpose Input/Output (I/O) 0 [GP0] pin 19
VIN[0]B_DE/ CAM_D[6]/ **GP0[19]**	AC15	I/O	IPU DVDD_C	VIN[0]B, CAMERA_I/F PINCNTL165 DSIS: PIN MM: MUX0	

Copyright © 2011–2013, Texas Instruments Incorporated

Table 3-10. GP0 Terminal Functions (continued)

SIGNAL NAME	NO.	TYPE(1)	OTHER(2) (3)	MUXED	DESCRIPTION
MCA[3]_AXR[0]/ TIM4_IO/ **GP0[18]**	G1	I/O	IPD DVDD	MCA[3], TIMER4 PINCNTL47 DSIS: PIN MM: MUX1	General-Purpose Input/Output (I/O) 0 [GP0] pin 18
VIN[0]A_DE/ CAM_D[7]/ **GP0[18]**	AB17	I/O	IPU DVDD_C	VIN[0]A, CAMERA_I/F PINCNTL164 DSIS: PIN MM: MUX0	
MCA[3]_AFSX/ **GP0[17]**	H4	I/O	IPD DVDD	MCA[3] PINCNTL46 DSIS: PIN MM: MUX1	General-Purpose Input/Output (I/O) 0 [GP0] pin 17
VIN[0]A_D[23]/ CAM_D[15]/ EMAC[1]_RMTXEN/ SPI[3]_D[0]/ **GP0[17]**	AC16	I/O	IPD DVDD_C	VIN[0]A, CAMERA_I/F, EMAC[1]_RM, SPI[3] PINCNTL163 DSIS: PIN MM: MUX0	
MCA[3]_ACLKX/ **GP0[16]**	G6	I/O	IPD DVDD	MCA[3] PINCNTL45 DSIS: PIN MM: MUX1	General-Purpose Input/Output (I/O) 0 [GP0] pin 16
VIN[0]A_D[22]/ CAM_D[14]/ EMAC[1]_RMTXD[1]/ SPI[3]_D[1]/ **GP0[16]**	AC21	I/O	IPD DVDD_C	VIN[0]A, CAMERA_I/F, EMAC[1]_RM, SPI[3] PINCNTL162 DSIS: PIN MM: MUX0	
MCA[2]_AXR[3]/ MCA[1]_AXR[7]/ TIM3_IO/ **GP0[15]**	H2	I/O	IPD DVDD	MCA[2], MCA[1], TIMER3 PINCNTL44 DSIS: PIN MM: MUX1	General-Purpose Input/Output (I/O) 0 [GP0] pin 15
VIN[0]A_D[21]/ CAM_D[13]/ EMAC[1]_RMTXD[0]/ SPI[3]_SCLK/ **GP0[15]**	AE18	I/O	IPD DVDD_C	VIN[0]A, CAMERA_I/F, EMAC[1]_RM, SPI[3] PINCNTL161 DSIS: PIN MM: MUX0	
MCA[2]_AXR[2]/ MCA[1]_AXR[6]/ TIM2_IO/ **GP0[14]**	V5	I/O	IPD DVDD	MCA[2], MCA[1], TIMER2 PINCNTL43 DSIS: PIN MM: MUX1	General-Purpose Input/Output (I/O) 0 [GP0] pin 14
VIN[0]A_D[20]/ CAM_D[12]/ EMAC[1]_RMCRSDV/ SPI[3]_SCS[0]/ **GP0[14]**	AC17	I/O	IPD DVDD_C	VIN[0]A, CAMERA_I/F, EMAC[1]_RM, SPI[3] PINCNTL160 DSIS: PIN MM: MUX0	

Table 3-10. GP0 Terminal Functions (continued)

SIGNAL NAME	NO.	TYPE(1)	OTHER(2) (3)	MUXED	DESCRIPTION
MCA[2]_AXR[1]/ SD0_DAT[7]/ UART5_TXD/ **GP0[13]**	V6	I/O	IPU DVDD	MCA[2], SD0, UART5 PINCNTL42 DSIS: PIN MM: MUX1	General-Purpose Input/Output (I/O) 0 [GP0] pin 13
VIN[0]A_D[19]/ CAM_D[11]/ EMAC[1]_RMRXD[0]/ I2C[3]_SDA/ **GP0[13]**	AF21	I/O	IPU DVDD_C	VIN[0]A, CAMERA_I/F, EMAC[1]_RM, I2C[3] PINCNTL159 DSIS: PIN MM: MUX0	
MCA[2]_AXR[0]/ SD0_DAT[6]/ UART5_RXD/ **GP0[12]**	N2	I/O	IPU DVDD	MCA[2], SD0, UART5 PINCNTL41 DSIS: PIN MM: MUX1	General-Purpose Input/Output (I/O) 0 [GP0] pin 12
VIN[0]A_D[18]/ CAM_D[10]/ EMAC[1]_RMRXD[1]/ I2C[3]_SCL/ **GP0[12]**	AF20	I/O	IPU DVDD_C	VIN[0]A, CAMERA_I/F, EMAC[1]_RM, I2C[3] PINCNTL158 DSIS: PIN MM: MUX0	
MCA[2]_AFSX/ **GP0[11]**	AA5	I/O	IPU DVDD	MCA[2] PINCNTL40 DSIS: PIN MM: MUX1	General-Purpose Input/Output (I/O) 0 [GP0] pin 11
VIN[0]A_D[17]/ CAM_D[9]/ EMAC[1]_RMRXER/ **GP0[11]**	AB21	I/O	IPD DVDD_C	VIN[0]A, CAMERA_I/F, EMAC[1]_RM PINCNTL157 DSIS: PIN MM: MUX0	
MCA[2]_ACLKX/ **GP0[10]**	U6	I/O	IPU DVDD	MCA[2] PINCNTL39 DSIS: PIN MM: MUX1	General-Purpose Input/Output (I/O) 0 [GP0] pin 10
VIN[0]A_D[16]/ CAM_D[8]/ I2C[2]_SCL/ **GP0[10]**	AA21	I/O	IPU DVDD_C	VIN[0]A, CAMERA_I/F, I2C[2] PINCNTL156 DSIS: PIN MM: MUX0	
AUD_CLKIN2/ MCA[0]_AXR[9]/ MCA[2]_AHCLKX/ MCA[5]_AHCLKX/ EDMA_EVT2/ TIM3_IO/ **GP0[9]**	H1	I/O	IPD DVDD	AUD_CLKIN2, MCA[0], MCA[2], MCA[5], EDMA, TIMER3 PINCNTL16 DSIS: PIN	General-Purpose Input/Output (I/O) 0 [GP0] pin 9
AUD_CLKIN1/ MCA[0]_AXR[8]/ MCA[1]_AHCLKX/ MCA[4]_AHCLKX/ EDMA_EVT3/ TIM2_IO/ **GP0[8]**	R5	I/O	IPD DVDD	AUD_CLKIN1, MCA[0], MCA[1], MCA[4], EDMA, TIMER2 PINCNTL15 DSIS: PIN	General-Purpose Input/Output (I/O) 0 [GP0] pin 8
USB0_DRVVBUS/ **GP0[7]**	AF11	I/O	IPD DVDD	USB0 PINCNTL270 DSIS: PIN	General-Purpose Input/Output (I/O) 0 [GP0] pin 7

Copyright © 2011–2013, Texas Instruments Incorporated

Table 3-10. GP0 Terminal Functions (continued)

SIGNAL NAME	NO.	TYPE[1]	OTHER[2] [3]	MUXED	DESCRIPTION
SD0_DAT[3]/ SD1_DAT[7]/ **GP0[6]**	Y4	I/O	IPU DVDD_SD	SD0, SD1 PINCNTL13 DSIS: PIN	General-Purpose Input/Output (I/O) 0 [GP0] pin 6
SD0_DAT[2]_SDR$\overline{W}$/ SD1_DAT[6]/ **GP0[5]**	Y3	I/O	IPU DVDD_SD	SD0, SD1 PINCNTL12 DSIS: PIN	General-Purpose Input/Output (I/O) 0 [GP0] pin 5
SD0_DAT[1]_$\overline{SDIRQ}$/ SD1_DAT[5]/ **GP0[4]**	Y5	I/O	IPU DVDD_SD	SD0, SD1 PINCNTL11 DSIS: PIN	General-Purpose Input/Output (I/O) 0 [GP0] pin 4
SD0_DAT[0]/ SD1_DAT[4]/ **GP0[3]**	R7	I/O	IPU DVDD_SD	SD0, SD1 PINCNTL10 DSIS: PIN	General-Purpose Input/Output (I/O) 0 [GP0] pin 3
SD0_CMD/ SD1_CMD/ **GP0[2]**	N1	I/O	IPU DVDD_SD	SD0, SD1 PINCNTL9 DSIS: PIN	General-Purpose Input/Output (I/O) 0 [GP0] pin 2
SD0_CLK/ **GP0[1]**	Y6	I/O	IPU DVDD_SD	SD0 PINCNTL8 DSIS: PIN	General-Purpose Input/Output (I/O) 0 [GP0] pin 1
SD1_CMD/ **GP0[0]**	P2	I/O	IPU DVDD_SD	SD1 PINCNTL2 DSIS: PIN	General-Purpose Input/Output (I/O) 0 [GP0] pin 0

Copyright © 2011–2013, Texas Instruments Incorporated

Table 3-11. GP1 Terminal Functions

SIGNAL NAME	NO.	TYPE(1)	OTHER(2)(3)	MUXED	DESCRIPTION
GPIO1					
Note: General-Purpose Input/Output (I/O) pins can also serve as external interrupt inputs.					
GPMC_WAIT[0]/ GPMC_A[26]/ EDMA_EVT0/ **GP1[31]**	W28	I/O	IPU DVDD_GPMC	GPMC, EDMA PINCNTL133 DSIS: PIN	General-Purpose Input/Output (I/O) 1 [GP1] pin 31
GPMC_$\overline{\text{BE}}$[1]/ GPMC_A[24]/ EDMA_EVT1/ TIM7_IO/ **GP1[30]**	V28	I/O	IPD DVDD_GPMC	GPMC, EDMA, TIMER7 PINCNTL132 DSIS: PIN	General-Purpose Input/Output (I/O) 1 [GP1] pin 30
GPMC_$\overline{\text{BE}}$[0]_CLE/ GPMC_A[25]/ EDMA_EVT2/ TIM6_IO/ **GP1[29]**	U27	I/O	IPD DVDD_GPMC	GPMC, EDMA, TIMER6 PINCNTL131 DSIS: PIN	General-Purpose Input/Output (I/O) 1 [GP1] pin 29
GPMC_$\overline{\text{ADV}}$_ALE/ GPMC_CS[6]/ TIM5_IO/ **GP1[28]**	M26	I/O	IPU DVDD_GPMC	GPMC, TIMER5 PINCNTL128 DSIS: PIN	General-Purpose Input/Output (I/O) 1 [GP1] pin 28
GPMC_CLK/ GPMC_CS[5]/ GPMC_WAIT[1]/ CLKOUT1/ EDMA_EVT3/ TIM4_IO/ **GP1[27]**	R26	I/O	IPU DVDD_GPMC	GPMC, CLKOUT1, EDMA, TIMER4 PINCNTL127 DSIS: PIN	General-Purpose Input/Output (I/O) 1 [GP1] pin 27
SPI[1]_D[0]/ **GP1[26]**	AA6	I/O	IPU DVDD	SPI[1] PINCNTL88 DSIS: PIN MM: MUX1	General-Purpose Input/Output (I/O) 1 [GP1] pin 26
GPMC_$\overline{\text{CS}}$[3]/ VIN[1]B_CLK/ SPI[2]_SCS[0]/ **GP1[26]**	P26	I/O	IPU DVDD_GPMC	GPMC, VIN[1]B, SPI[2] PINCNTL125 DSIS: PIN MM: MUX0	
GPMC_$\overline{\text{CS}}$[2]/ GPMC_A[24]/ **GP1[25]**	M25	I/O	IPU DVDD_GPMC	GPMC PINCNTL124 DSIS: PIN	General-Purpose Input/Output (I/O) 1 [GP1] pin 25
GPMC_$\overline{\text{CS}}$[1]/ GPMC_A[25]/ **GP1[24]**	K28	I/O	IPU DVDD_GPMC	GPMC PINCNTL123 DSIS: PIN	General-Purpose Input/Output (I/O) 1 [GP1] pin 24
GPMC_$\overline{\text{CS}}$[0]/ **GP1[23]**	T28	I/O	IPU DVDD_GPMC	GPMC PINCNTL122 DSIS: PIN	General-Purpose Input/Output (I/O) 1 [GP1] pin 23
SD2_DAT[4]/ GPMC_A[27]/ GPMC_A[23]/ GPMC_CS[7]/ EDMA_EVT0/ TIM7_IO/ **GP1[22]**	R24	I/O	IPU DVDD_GPMC	SD2, GPMC, EDMA, TIMER7 PINCNTL116 DSIS: PIN	General-Purpose Input/Output (I/O) 1 [GP1] pin 22

(1) I = Input, O = Output, Z = High impedance, S = Supply voltage, GND = Ground, A = Analog signal, MM = Multi Muxed, DSIS = De-selected Input State
(2) IPD = Internal Pulldown Active, IPU = Internal Pullup Active, DIS = Internal Pull Disabled. This represents the default state of the Internal Pull after Reset. For more detailed information on pullup/pulldown resistors and situations where external pullup/pulldown resistors are required, see Section 4.5.1, *Pullup/Pulldown Resistors* and Section 7.3.17, *Pin Behaviors at Reset*.
(3) Specifies the operating I/O supply voltage for each signal

Copyright © 2011–2013, Texas Instruments Incorporated

Table 3-11. GP1 Terminal Functions (continued)

SIGNAL NAME	SIGNAL NO.	TYPE(1)	OTHER(2)(3)	MUXED	DESCRIPTION
SD2_DAT[5]/ GPMC_A[26]/ GPMC_A[22]/ TIM6_IO/ **GP1[21]**	P22	I/O	IPU DVDD_GPMC	SD2, GPMC, TIMER6 PINCNTL115 DSIS: PIN	General-Purpose Input/Output (I/O) 1 [GP1] pin 21
SD2_DAT[6]/ GPMC_A[25]/ GPMC_A[21]/ UART2_TXD/ **GP1[20]**	N23	I/O	IPU DVDD_GPMC	SD2, GPMC, UART2 PINCNTL114 DSIS: PIN	General-Purpose Input/Output (I/O) 1 [GP1] pin 20
SD2_DAT[7]/ GPMC_A[24]/ GPMC_A[20]/ UART2_RXD/ **GP1[19]**	L25	I/O	IPU DVDD_GPMC	SD2, GPMC, UART2 PINCNTL113 DSIS: PIN	General-Purpose Input/Output (I/O) 1 [GP1] pin 19
SPI[1]_D[1]/ **GP1[18]**	AA3	I/O	IPU DVDD	SPI[1] PINCNTL87 DSIS: PIN MM: MUX1	General-Purpose Input/Output (I/O) 1 [GP1] pin 18
GPMC_A[23]/ SPI[2]_SCLK/ HDMI_HPDET/ TIM5_IO/ **GP1[18]**	AA26	I/O	IPD DVDD_GPMC	GPMC, SPI[2], HDMI, TIMER5 PINCNTL112 DSIS: PIN MM: MUX0	
SPI[1]_SCLK/ **GP1[17]**	AC3	I/O	IPU DVDD	SPI[1] PINCNTL86 DSIS: PIN MM: MUX1	General-Purpose Input/Output (I/O) 1 [GP1] pin 17
GPMC_A[22]/ SPI[2]_D[1]/ HDMI_CEC/ TIM4_IO/ **GP1[17]**	AB27	I/O	IPU DVDD_GPMC	GPMC, SPI[2], HDMI, TIMER4 PINCNTL111 DSIS: PIN MM: MUX0	
$\overline{\text{SPI[1]_SCS[0]}}$/ **GP1[16]**	AD3	I/O	IPU DVDD	SPI[1] PINCNTL85 DSIS: PIN MM: MUX1	General-Purpose Input/Output (I/O) 1 [GP1] pin 16
GPMC_A[21]/ SPI[2]_D[0]/ **GP1[16]**	AC28	I/O	IPD DVDD_GPMC	GPMC, SPI[2] PINCNTL110 DSIS: PIN MM: MUX0	
SD2_CLK/ **GP1[15]**	M23	I/O	IPU DVDD_GPMC	SD2 PINCNTL121 DSIS: PIN MM: MUX1	General-Purpose Input/Output (I/O) 1 [GP1] pin 15
GPMC_A[20]/ $\overline{\text{SPI[2]_SCS[1]}}$/ **GP1[15]**	AD28	I/O	IPU DVDD_GPMC	GPMC, SPI[2] PINCNTL109 DSIS: PIN MM: MUX0	
SD2_DAT[0]/ GPMC_A[4]/ **GP1[14]**	L26	I/O	IPU DVDD_GPMC	SD2, GPMC PINCNTL120 DSIS: PIN MM: MUX1	General-Purpose Input/Output (I/O) 1 [GP1] pin 14
GPMC_A[19]/ TIM3_IO/ **GP1[14]**	AC27	I/O	IPD DVDD_GPMC	GPMC, TIMER3 PINCNTL108 DSIS: PIN MM: MUX0	

Copyright © 2011–2013, Texas Instruments Incorporated

Table 3-11. GP1 Terminal Functions (continued)

SIGNAL NAME	NO.	TYPE(1)	OTHER(2)(3)	MUXED	DESCRIPTION
SD2_DAT[1]_$\overline{\text{SDIRQ}}$ / GPMC_A[3]/ **GP1[13]**	M24	I/O	IPU DVDD_GPMC	SD2, GPMC PINCNTL119 DSIS: PIN MM: MUX1	General-Purpose Input/Output (I/O) 1 [GP1] pin 13
GPMC_A[18]/ TIM2_IO/ **GP1[13]**	AE28	I/O	IPD DVDD_GPMC	GPMC, TIMER2 PINCNTL107 DSIS: PIN MM: MUX0	
VIN[0]A_D[1]/ **GP1[12]**	AB11	I/O	IPD DVDD	VIN[0]A PINCNTL141 DSIS: PIN MM: MUX1	General-Purpose Input/Output (I/O) 1 [GP1] pin 12
MDIO/ **GP1[12]**	P24	I/O	IPU DVDD_GPMC	MDIO PINCNTL234 DSIS: PIN MM: MUX0	
VIN[0]A_D[0]/ **GP1[11]**	AF9	I/O	IPD DVDD	VIN[0]A PINCNTL140 DSIS: PIN MM: MUX1	General-Purpose Input/Output (I/O) 1 [GP1] pin 11
MDCLK/ **GP1[11]**	H28	I/O	IPU DVDD_GPMC	MDIO PINCNTL233 DSIS: PIN MM: MUX0	
GP1[10]	V2	I/O	IPU DVDD_M	PINCNTL65 DSIS: PIN MM: MUX1	General-Purpose Input/Output (I/O) 1 [GP1] pin 10 The ENLVCMOS bit in the MLBP_DAT_IO_CTRL register should be set to 1 to enable GPIO LVCMOS mode. The ENN bit in the MLBP_DAT_IO_CTRL register should also be set to 1 to enable the GPIO LVCMOS receiver. The internal Pullup/Pulldown is always disabled, regardless of the state of the PULLUDEN bit in the PINCNTL65 register. An external Pullup/Pulldown can be used to control the floating state of this pin.
EMAC_RMREFCLK/ TIM2_IO/ **GP1[10]**	J27	I/O	IPD DVDD_GPMC	EMAC, TIMER2 PINCNTL232 DSIS: PIN MM: MUX0	General-Purpose Input/Output (I/O) 1 [GP1] pin 10
GP1[9]	V1	I/O	IPD DVDD_M	PINCNTL64 DSIS: PIN MM: MUX1	General-Purpose Input/Output (I/O) 1 [GP1] pin 9 The ENLVCMOS bit in the MLBP_DAT_IO_CTRL register should be set to 1 to enable GPIO LVCMOS mode. The ENP bit in the MLBP_DAT_IO_CTRL register should also be set to 1 to enable the GPIO LVCMOS receiver. The internal Pullup/Pulldown is always disabled, regardless of the state of the PULLUDEN bit in the PINCNTL64 register. An external Pullup/Pulldown can be used to control the floating state of this pin.
VIN[0]B_CLK/ CLKOUT0/ **GP1[9]**	AE17	I/O	IPD DVDD	VIN[0]B, CLKOUT0 PINCNTL134 DSIS: PIN MM: MUX0	General-Purpose Input/Output (I/O) 1 [GP1] pin 9
GP1[8]	W2	I/O	IPU DVDD_M	PINCNTL63 DSIS: PIN MM: MUX1	General-Purpose Input/Output (I/O) 1 [GP1] pin 8 The ENLVCMOS bit in the MLBP_DAT_IO_CTRL register should be set to 1 to enable GPIO LVCMOS mode. The ENN bit in the MLBP_DAT_IO_CTRL register should also be set to 1 to enable the GPIO LVCMOS receiver. The internal Pullup/Pulldown is always disabled, regardless of the state of the PULLUDEN bit in the PINCNTL63 register. An external Pullup/Pulldown can be used to control the floating state of this pin.

Copyright © 2011–2013, Texas Instruments Incorporated

Table 3-11. GP1 Terminal Functions (continued)

SIGNAL NAME	NO.	TYPE(1)	OTHER(2)(3)	MUXED	DESCRIPTION
GPMC_CS[4]/ SD2_CMD/ **GP1[8]**	P25	I/O	IPU DVDD_GPMC	GPMC, SD2 PINCNTL126 DSIS: PIN MM: MUX0	General-Purpose Input/Output (I/O) 1 [GP1] pin 8
GP1[7]	W1	I/O	IPD DVDD_M	PINCNTL62 DSIS: PIN MM: MUX1	General-Purpose Input/Output (I/O) 1 [GP1] pin 7 The ENLVCMOS bit in the MLBP_DAT_IO_CTRL register should be set to 1 to enable GPIO LVCMOS mode. The ENP bit in the MLBP_DAT_IO_CTRL register should also be set to 1 to enable the GPIO LVCMOS receiver. The internal Pullup/Pulldown is always disabled, regardless of the state of the PULLUDEN bit in the PINCNTL62 register. An external Pullup/Pulldown can be used to control the floating state of this pin.
DEVOSC_WAKE/ SPI[1]_SCS[1]/ TIM5_IO/ **GP1[7]**	W6	I/O	IPU DVDD_SD	DEVOSC, SPI[1], TIMER5 PINCNTL7 DSIS: PIN MM: MUX0	General-Purpose Input/Output (I/O) 1 [GP1] pin 7
SPI[0]_SCS[1]/ SD1_SDCD/ SATA_ACT0_LED/ EDMA_EVT1/ TIM4_IO/ **GP1[6]**	AE5	I/O	IPU DVDD	SPI[0], SD1, SATA, EDMA, TIMER4 PINCNTL80 DSIS: PIN	General-Purpose Input/Output (I/O) 1 [GP1] pin 6
UART0_RIN/ UART3_RTS/ UART1_RXD/ **GP1[5]**	AF4	I/O	IPU DVDD	UART0, UART3, UART1 PINCNTL77 DSIS: PIN	General-Purpose Input/Output (I/O) 1 [GP1] pin 5
UART0_DTR/ UART3_CTS/ UART1_TXD/ **GP1[4]**	AG2	I/O	IPU DVDD	UART0, UART3, UART1 PINCNTL76 DSIS: PIN	General-Purpose Input/Output (I/O) 1 [GP1] pin 4
UART0_DSR/ UART3_TXD/ SPI[0]_SCS[2]/ I2C[2]_SDA/ SD1_SDWP/ **GP1[3]**	AG4	I/O	IPU DVDD	UART0, UART3, SPI[0], I2C[2], SD1 PINCNTL75 DSIS: PIN	General-Purpose Input/Output (I/O) 1 [GP1] pin 3
UART0_DCD/ UART3_RXD/ SPI[0]_SCS[3]/ I2C[2]_SCL/ SD1_POW/ **GP1[2]**	AH4	I/O	IPU DVDD	UART0, UART3, SPI[0], I2C[2], SD1 PINCNTL74 DSIS: PIN	General-Purpose Input/Output (I/O) 1 [GP1] pin 2
DCAN0_RX/ UART2_RXD/ I2C[3]_SCL/ **GP1[1]**	AG6	I/O	IPU DVDD	DCAN0, UART2, I2C[3] PINCNTL69 DSIS: PIN	General-Purpose Input/Output (I/O) 1 [GP1] pin 1
DCAN0_TX/ UART2_TXD/ I2C[3]_SDA/ **GP1[0]**	AH6	I/O	IPU DVDD	DCAN0, UART2, I2C[3] PINCNTL68 DSIS: PIN	General-Purpose Input/Output (I/O) 1 [GP1] pin 0

Copyright © 2011–2013, Texas Instruments Incorporated

Table 3-12. GP2 Terminal Functions

SIGNAL NAME	NO.	TYPE(1)	OTHER(2)(3)	MUXED	DESCRIPTION
GPIO2					
Note: General-Purpose Input/Output (I/O) pins can also serve as external interrupt inputs.					
VOUT[1]_AVID/ EMAC[1]_MRXER/ VIN[1]A_CLK/ UART4_RTS/ TIM6_IO/ **GP2[31]**	Y22	I/O	IPD DVDD	VOUT[1], EMAC[1], VIN[1]A, UART4, TIMER6 PINCNTL207 DSIS: PIN	General-Purpose Input/Output (I/O) 2 [GP2] pin 31
VOUT[1]_VSYNC/ EMAC[1]_MCRS/ VIN[1]A_FLD/ VIN[1]A_DE/ SPI[3]_D[0]/ UART3_CTS/ **GP2[30]**	AA23	I/O	IPD DVDD	VOUT[1], EMAC[1], VIN[1]A, SPI[3], UART3 PINCNTL206 DSIS: PIN	General-Purpose Input/Output (I/O) 2 [GP2] pin 30
VOUT[1]_HSYNC/ EMAC[1]_MCOL/ VIN[1]A_VSYNC/ SPI[3]_D[1]/ UART3_RTS/ **GP2[29]**	AC24	I/O	IPD DVDD	VOUT[1], EMAC[1], VIN[1]A, SPI[3], UART3 PINCNTL205 DSIS: PIN	General-Purpose Input/Output (I/O) 2 [GP2] pin 29
VOUT[1]_CLK/ EMAC[1]_MTCLK/ VIN[1]A_HSYNC/ **GP2[28]**	AE24	I/O	IPD DVDD	VOUT[1], EMAC[1], VIN[1]A PINCNTL204 DSIS: PIN	General-Purpose Input/Output (I/O) 2 [GP2] pin 28
VOUT[0]_R_CR[3]/ **GP2[27]**	AB9	I/O	IPD DVDD	VOUT[0] PINCNTL197 DSIS: PIN	General-Purpose Input/Output (I/O) 2 [GP2] pin 27
VOUT[0]_R_CR[2]/ EMU4/ **GP2[26]**	AD9	I/O	IPD DVDD	VOUT[0], EMU PINCNTL196 DSIS: PIN	General-Purpose Input/Output (I/O) 2 [GP2] pin 26
VOUT[0]_G_Y_YC[3]/ **GP2[25]**	AH15	I/O	IPD DVDD	VOUT[0] PINCNTL189 DSIS: PIN	General-Purpose Input/Output (I/O) 2 [GP2] pin 25
VOUT[0]_G_Y_YC[2]/ EMU3/ **GP2[24]**	AH7	I/O	IPD DVDD	VOUT[0], EMU PINCNTL188 DSIS: PIN	General-Purpose Input/Output (I/O) 2 [GP2] pin 24
VOUT[0]_B_CB_C[3]/ **GP2[23]**	AE15	I/O	IPD DVDD	VOUT[0] PINCNTL181 DSIS: PIN	General-Purpose Input/Output (I/O) 2 [GP2] pin 23
VOUT[0]_B_CB_C[2]/ EMU2/ **GP2[22]**	AG7	I/O	IPD DVDD	VOUT[0], EMU PINCNTL180 DSIS: PIN	General-Purpose Input/Output (I/O) 2 [GP2] pin 22
VOUT[0]_AVID/ VOUT[0]_FLD/ SPI[3]_SCLK/ TIM7_IO/ **GP2[21]**	AA10	I/O	IPD DVDD	VOUT[0], SPI[3], TIMER7 PINCNTL179 DSIS: PIN	General-Purpose Input/Output (I/O) 2 [GP2] pin 21
VIN[0]A_D[15]_BD[7]/ CAM_SHUTTER/ **GP2[20]**	AC14	I/O	DIS DVDD	VIN[0]AB, CAMERA_I/F PINCNTL155 DSIS: PIN	General-Purpose Input/Output (I/O) 2 [GP2] pin 20

(1) I = Input, O = Output, Z = High impedance, S = Supply voltage, GND = Ground, A = Analog signal, MM = Multi Muxed, DSIS = De-selected Input State
(2) IPD = Internal Pulldown Active, IPU = Internal Pullup Active, DIS = Internal Pull Disabled. This represents the default state of the Internal Pull after Reset. For more detailed information on pullup/pulldown resistors and situations where external pullup/pulldown resistors are required, see Section 4.5.1, *Pullup/Pulldown Resistors* and Section 7.3.17, *Pin Behaviors at Reset*.
(3) Specifies the operating I/O supply voltage for each signal

Copyright © 2011–2013, Texas Instruments Incorporated

Table 3-12. GP2 Terminal Functions (continued)

SIGNAL NAME	NO.	TYPE(1)	OTHER(2)(3)	MUXED	DESCRIPTION
VIN[0]A_D[14]_BD[6]/ CAM_STROBE/ **GP2[19]**	AC12	I/O	IPD DVDD	VIN[0]AB, CAMERA_I/F PINCNTL154 DSIS: PIN	General-Purpose Input/Output (I/O) 2 [GP2] pin 19
VIN[0]A_D[13]_BD[5]/ CAM_RESET/ **GP2[18]**	AF17	I/O	IPD DVDD	VIN[0]AB, CAMERA_I/F PINCNTL153 DSIS: PIN	General-Purpose Input/Output (I/O) 2 [GP2] pin 18
VIN[0]A_D[12]_BD[4]/ CLKOUT1/ **GP2[17]**	AG17	I/O	IPD DVDD	VIN[0]AB, CLKOUT1 PINCNTL152 DSIS: PIN	General-Purpose Input/Output (I/O) 2 [GP2] pin 17
VIN[0]A_D[11]_BD[3]/ CAM_WE/ **GP2[16]**	AH17	I/O	IPD DVDD	VIN[0]AB, CAMERA_I/F PINCNTL151 DSIS: PIN	General-Purpose Input/Output (I/O) 2 [GP2] pin 16
VIN[0]A_D[10]_BD[2]/ **GP2[15]**	AH9	I/O	IPD DVDD	VIN[0]AB PINCNTL150 DSIS: PIN	General-Purpose Input/Output (I/O) 2 [GP2] pin 15
VIN[0]A_D[9]_BD[1]/ **GP2[14]**	AG9	I/O	IPD DVDD	VIN[0]AB PINCNTL149 DSIS: PIN	General-Purpose Input/Output (I/O) 2 [GP2] pin 14
VIN[0]A_D[8]_BD[0]/ **GP2[13]**	AB15	I/O	IPD DVDD	VIN[0]AB PINCNTL148 DSIS: PIN	General-Purpose Input/Output (I/O) 2 [GP2] pin 13
VIN[0]A_D[7]/ **GP2[12]**	AA11	I/O	IPD DVDD	VIN[0]A PINCNTL147 DSIS: PIN	General-Purpose Input/Output (I/O) 2 [GP2] pin 12
VIN[0]A_D[6]/ **GP2[11]**	AH16	I/O	IPD DVDD	VIN[0]A PINCNTL146 DSIS: PIN	General-Purpose Input/Output (I/O) 2 [GP2] pin 11
VIN[0]A_D[5]/ **GP2[10]**	AG16	I/O	IPD DVDD	VIN[0]A PINCNTL145 DSIS: PIN	General-Purpose Input/Output (I/O) 2 [GP2] pin 10
VIN[0]A_D[4]/ **GP2[9]**	AH8	I/O	IPD DVDD	VIN[0]A PINCNTL144 DSIS: PIN	General-Purpose Input/Output (I/O) 2 [GP2] pin 9
VIN[0]A_D[3]/ **GP2[8]**	AE12	I/O	IPD DVDD	VIN[0]A PINCNTL143 DSIS: PIN	General-Purpose Input/Output (I/O) 2 [GP2] pin 8
VIN[0]A_D[2]/ **GP2[7]**	AC9	I/O	IPD DVDD	VIN[0]A PINCNTL142 DSIS: PIN	General-Purpose Input/Output (I/O) 2 [GP2] pin 7
SD2_DAT[2]_SDR$\overline{W}$/ GPMC_A[2]/ **GP2[6]**	K27	I/O	IPU DVDD_GPMC	SD2, GPMC PINCNTL118 DSIS: PIN MM: MUX1	General-Purpose Input/Output (I/O) 2 [GP2] pin 6
GPMC_A[17]/ **GP2[6]**	V23	I/O	IPD DVDD_GPMC	GPMC PINCNTL106 DSIS: PIN MM: MUX0	
SD2_DAT[3]/ GPMC_A[1]/ **GP2[5]**	J28	I/O	IPU DVDD_GPMC	SD2, GPMC PINCNTL117 DSIS: PIN MM: MUX1	General-Purpose Input/Output (I/O) 2 [GP2] pin 5
GPMC_A[16]/ **GP2[5]**	AD27	I/O	IPD DVDD_GPMC	GPMC PINCNTL105 DSIS: PIN MM: MUX0	

Table 3-12. GP2 Terminal Functions (continued)

SIGNAL NAME	NO.	TYPE(1)	OTHER(2)(3)	MUXED	DESCRIPTION
VIN[0]A_VSYNC/ UART5_CTS/ **GP2[4]**	AD20	I/O	IPU DVDD	VIN[0]A, UART5 PINCNTL139 DSIS: PIN	General-Purpose Input/Output (I/O) 2 [GP2] pin 4
VIN[0]A_HSYNC/ UART5_RTS/ **GP2[3]**	AC20	I/O	IPU DVDD	VIN[0]A, UART5 PINCNTL138 DSIS: PIN	General-Purpose Input/Output (I/O) 2 [GP2] pin 3
VIN[0]A_CLK/ **GP2[2]**	AB20	I/O	IPD DVDD	VIN[0]A PINCNTL137 DSIS: PIN MM: MUX1	General-Purpose Input/Output (I/O) 2 [GP2] pin 2
VOUT[0]_FLD/ CAM_PCLK/ GPMC_A[12]/ UART2_RTS/ **GP2[2]**	AF18	I/O	IPD DVDD_C	VOUT[0], CAMERA_I/F, GPMC, UART2 PINCNTL175 DSIS: PIN MM: MUX0	
VIN[0]A_FLD/ VIN[0]B_VSYNC/ UART5_RXD/ I2C[2]_SCL/ **GP2[1]**	AA20	I/O	IPU DVDD	VIN[0]A, VIN[0]B, UART5, I2C[2] PINCNTL136 DSIS: PIN	General-Purpose Input/Output (I/O) 2 [GP2] pin 1
VIN[0]A_DE/ VIN[0]B_HSYNC/ UART5_TXD/ I2C[2]_SDA/ **GP2[0]**	AE21	I/O	IPU DVDD	VIN[0]A, VIN[0]B, UART5, I2C[2] PINCNTL135 DSIS: PIN	General-Purpose Input/Output (I/O) 2 [GP2] pin 0

Copyright © 2011–2013, Texas Instruments Incorporated

Table 3-13. GP3 Terminal Functions

SIGNAL NAME	NO.	TYPE(1)	OTHER(2) (3)	MUXED	DESCRIPTION
GPIO3					
Note: General-Purpose Input/Output (I/O) pins can also serve as external interrupt inputs.					
CLKIN32/ CLKOUT0/ TIM3_IO/ **GP3[31]**	J7	I/O	IPD DVDD	CLKIN32, CLKOUT0, TIMER3 PINCNTL259 DSIS: PIN	General-Purpose Input/Output (I/O) 3 [GP3] pin 31.
VOUT[1]_B_CB_C[2]/ GPMC_A[0]/ VIN[1]A_D[7]/ HDMI_CEC/ SPI[2]_D[0]/ **GP3[30]**	AF28	I/O	IPU DVDD	VOUT[1], GPMC, VIN[1]A, HDMI, SPI[2] PINCNTL231 DSIS: PIN MM: MUX1	General-Purpose Input/Output (I/O) 3 [GP3] pin 30.
EMAC[0]_MRXD[2]/ EMAC[0]_RGRXD[1]/ VIN[1]B_D[7]/ EMAC[0]_RMTXEN/ **GP3[30]**	R23	I/O	IPD DVDD_GPMC	EMAC[0], VIN[1]B PINCNTL242 DSIS: PIN MM: MUX0	
EMAC[0]_MRXD[1]/ EMAC[0]_RGRXD[0]/ VIN[1]B_D[6]/ EMAC[0]_RMTXD[1]/ **GP3[29]**	P23	I/O	IPD DVDD_GPMC	EMAC[0], VIN[1]B PINCNTL241 DSIS: PIN	General-Purpose Input/Output (I/O) 3 [GP3] pin 29.
EMAC[0]_MRXD[0]/ EMAC[0]_RGTXD[0]/ VIN[1]B_D[5]/ EMAC[0]_RMTXD[0]/ **GP3[28]**	G28	I/O	IPD DVDD_GPMC	EMAC[0], VIN[1]B PINCNTL240 DSIS: PIN	General-Purpose Input/Output (I/O) 3 [GP3] pin 28.
EMAC[0]_MRCLK/ EMAC[0]_RGTXC/ VIN[1]B_D[4]/ EMAC[0]_RMCRSDV/ SPI[3]_SCS[2]/ **GP3[27]**	H27	I/O	IPD DVDD_GPMC	EMAC[0], VIN[1]B, SPI[3] PINCNTL239 DSIS: PIN	General-Purpose Input/Output (I/O) 3 [GP3] pin 27.
EMAC[0]_MRXER/ EMAC[0]_RGTXCTL/ VIN[1]B_D[3]/ EMAC[0]_RMRXER/ **GP3[26]**	J26	I/O	IPD DVDD_GPMC	EMAC[0], VIN[1]B PINCNTL238 DSIS: PIN	General-Purpose Input/Output (I/O) 3 [GP3] pin 26.
EMAC[0]_MCRS/ EMAC[0]_RGRXD[2]/ VIN[1]B_D[2]/ EMAC[0]_RMRXD[1]/ **GP3[25]**	R25	I/O	IPD DVDD_GPMC	EMAC[0], VIN[1]B PINCNTL237 DSIS: PIN	General-Purpose Input/Output (I/O) 3 [GP3] pin 25.
EMAC[0]_MCOL/ EMAC[0]_RGRXCTL/ VIN[1]B_D[1]/ EMAC[0]_RMRXD[0]/ **GP3[24]**	L23	I/O	IPD DVDD_GPMC	EMAC[0], VIN[1]B PINCNTL236 DSIS: PIN	General-Purpose Input/Output (I/O) 3 [GP3] pin 24.
EMAC[0]_MTCLK/ EMAC[0]_RGRXC/ VIN[1]B_D[0]/ SPI[3]_SCS[3]/ I2C[2]_SDA/ **GP3[23]**	L24	I/O	IPD DVDD_GPMC	EMAC[0], VIN[1]B, SPI[3], I2C[2] PINCNTL235 DSIS: PIN	General-Purpose Input/Output (I/O) 3 [GP3] pin 23.

(1) I = Input, O = Output, Z = High impedance, S = Supply voltage, GND = Ground, A = Analog signal, MM = Multi Muxed, DSIS = De-selected Input State
(2) IPD = Internal Pulldown Active, IPU = Internal Pullup Active, DIS = Internal Pull Disabled. This represents the default state of the Internal Pull after Reset. For more detailed information on pullup/pulldown resistors and situations where external pullup/pulldown resistors are required, see Section 4.5.1, *Pullup/Pulldown Resistors* and Section 7.3.17, *Pin Behaviors at Reset*.
(3) Specifies the operating I/O supply voltage for each signal

Copyright © 2011–2013, Texas Instruments Incorporated

Table 3-13. GP3 Terminal Functions (continued)

SIGNAL NAME	NO.	TYPE(1)	OTHER(2) (3)	MUXED	DESCRIPTION
VOUT[1]_R_CR[2]/ GPMC_A[15]/ VIN[1]A_D[23]/ HDMI_HPDET/ SPI[2]_D[1]/ **GP3[22]**	AE27	I/O	IPD DVDD	VOUT[1], GPMC, VIN[1]A, HDMI, SPI[2] PINCNTL230 DSIS: PIN	General-Purpose Input/Output (I/O) 3 [GP3] pin 22.
VOUT[1]_R_CR[3]/ GPMC_A[14]/ VIN[1]A_D[22]/ HDMI_SDA/ SPI[2]_SCLK/ I2C[2]_SDA **GP3[21]**	AG28	I/O	IPU DVDD	VOUT[1], GPMC, VIN[1]A, HDMI, SPI[2], I2C[2] PINCNTL229 DSIS: PIN	General-Purpose Input/Output (I/O) 3 [GP3] pin 21.
VOUT[1]_G_Y_YC[2]/ GPMC_A[13]/ VIN[1]A_D[21]/ HDMI_SCL/ SPI[2]_SCS[2]/ I2C[2]_SCL/ **GP3[20]**	AF27	I/O	IPU DVDD	VOUT[1], GPMC, VIN[1]A, HDMI, SPI[2], I2C[2] PINCNTL228 DSIS: PIN	General-Purpose Input/Output (I/O) 3 [GP3] pin 20.
VOUT[1]_R_CR[9]/ EMAC[1]_MTXEN/ VIN[1]A_D[20]/ UART5_TXD/ **GP3[19]**	Y24	I/O	IPD DVDD	VOUT[1], EMAC[1], VIN[1]A, UART5 PINCNTL227 DSIS: PIN	General-Purpose Input/Output (I/O) 3 [GP3] pin 19.
VOUT[1]_R_CR[8]/ EMAC[1]_MTXD[7]/ VIN[1]A_D[19]/ UART5_RXD/ **GP3[18]**	W23	I/O	IPD DVDD	VOUT[1], EMAC[1], VIN[1]A, UART5 PINCNTL226 DSIS: PIN	General-Purpose Input/Output (I/O) 3 [GP3] pin 18.
VOUT[1]_R_CR[7]/ EMAC[1]_MTXD[6]/ VIN[1]A_D[18]/ SPI[3]_D[0]/ **GP3[17]**	V22	I/O	IPD DVDD	VOUT[1], EMAC[1], VIN[1]A, SPI[3] PINCNTL225 DSIS: PIN	General-Purpose Input/Output (I/O) 3 [GP3] pin 17.
VOUT[1]_R_CR[6]/ EMAC[1]_MTXD[5]/ VIN[1]A_D[17]/ SPI[3]_D[1]/ **GP3[16]**	AA25	I/O	IPD DVDD	VOUT[1], EMAC[1], VIN[1]A, SPI[3] PINCNTL224 DSIS: PIN	General-Purpose Input/Output (I/O) 3 [GP3] pin 16.
VOUT[1]_R_CR[5]/ EMAC[1]_MTXD[4]/ VIN[1]A_D[16]/ SPI[3]_SCLK/ **GP3[15]**	AC26	I/O	IPD DVDD	VOUT[1], EMAC[1], VIN[1]A, SPI[3] PINCNTL223 DSIS: PIN	General-Purpose Input/Output (I/O) 3 [GP3] pin 15.
VOUT[1]_R_CR[4]/ EMAC[1]_MTXD[3]/ VIN[1]A_D[15]/ SPI[3]_SCS[1]/ **GP3[14]**	AG27	I/O	IPD DVDD	VOUT[1], EMAC[1], VIN[1]A, SPI[3] PINCNTL222 DSIS: PIN	General-Purpose Input/Output (I/O) 3 [GP3] pin 14.
VOUT[1]_G_Y_YC[9]/ EMAC[1]_MTXD[2]/ VIN[1]A_D[14]/ **GP3[13]**	AD26	I/O	IPD DVDD	VOUT[1], EMAC[1], VIN[1]A PINCNTL221 DSIS: PIN	General-Purpose Input/Output (I/O) 3 [GP3] pin 13.
VOUT[1]_G_Y_YC[8]/ EMAC[1]_MTXD[1]/ VIN[1]A_D[13]/ **GP3[12]**	AE26	I/O	IPD DVDD	VOUT[1], EMAC[1], VIN[1]A PINCNTL220 DSIS: PIN	General-Purpose Input/Output (I/O) 3 [GP3] pin 12.
VOUT[1]_G_Y_YC[7]/ EMAC[1]_MTXD[0]/ VIN[1]A_D[12]/ **GP3[11]**	AF26	I/O	IPD DVDD	VOUT[1], EMAC[1], VIN[1]A PINCNTL219 DSIS: PIN	General-Purpose Input/Output (I/O) 3 [GP3] pin 11.

Copyright © 2011–2013, Texas Instruments Incorporated

Table 3-13. GP3 Terminal Functions (continued)

SIGNAL NAME	NO.	TYPE(1)	OTHER(2) (3)	MUXED	DESCRIPTION
VOUT[1]_G_Y_YC[6]/ EMAC[1]_GMTCLK/ VIN[1]A_D[11]/ **GP3[10]**	AH27	I/O	IPD DVDD	VOUT[1], EMAC[1], VIN[1]A PINCNTL218 DSIS: PIN	General-Purpose Input/Output (I/O) 3 [GP3] pin 10.
VOUT[1]_G_Y_YC[5]/ EMAC[1]_MRXDV/ VIN[1]A_D[10]/ **GP3[9]**	AG26	I/O	IPD DVDD	VOUT[1], EMAC[1], VIN[1]A PINCNTL217 DSIS: PIN	General-Purpose Input/Output (I/O) 3 [GP3] pin 9.
VOUT[1]_G_Y_YC[4]/ EMAC[1]_MRXD[7]/ VIN[1]A_D[9]/ **GP3[8]**	W22	I/O	IPD DVDD	VOUT[1], EMAC[1], VIN[1]A PINCNTL216 DSIS: PIN	General-Purpose Input/Output (I/O) 3 [GP3] pin 8.
VOUT[1]_G_Y_YC[3]/ EMAC[1]_MRXD[6]/ VIN[1]A_D[8]/ **GP3[7]**	Y23	I/O	IPD DVDD	VOUT[1], EMAC[1], VIN[1]A PINCNTL215 DSIS: PIN	General-Purpose Input/Output (I/O) 3 [GP3] pin 7.
VOUT[1]_B_CB_C[9]/ EMAC[1]_MRXD[5]/ VIN[1]A_D[6]/ I2C[3]_SDA/ **GP3[6]**	AA24	I/O	IPD DVDD	VOUT[1], EMAC[1], VIN[1]A, I2C[3] PINCNTL214 DSIS: PIN	General-Purpose Input/Output (I/O) 3 [GP3] pin 6.
VOUT[1]_B_CB_C[8]/ EMAC[1]_MRXD[4]/ VIN[1]A_D[5]/ I2C[3]_SCL/ **GP3[5]**	AH26	I/O	IPD DVDD	VOUT[1], EMAC[1], VIN[1]A, I2C[3] PINCNTL213 DSIS: PIN	General-Purpose Input/Output (I/O) 3 [GP3] pin 5.
VOUT[1]_B_CB_C[7]/ EMAC[1]_MRXD[3]/ VIN[1]A_D[4]/ UART3_TXD/ **GP3[4]**	AC25	I/O	IPD DVDD	VOUT[1], EMAC[1], VIN[1]A, UART3 PINCNTL212 DSIS: PIN	General-Purpose Input/Output (I/O) 3 [GP3] pin 4.
VOUT[1]_B_CB_C[6]/ EMAC[1]_MRXD[2]/ VIN[1]A_D[3]/ UART3_RXD/ **GP3[3]**	AD25	I/O	IPD DVDD	VOUT[1], EMAC[1], VIN[1]A, UART3 PINCNTL211 DSIS: PIN	General-Purpose Input/Output (I/O) 3 [GP3] pin 3.
VOUT[1]_B_CB_C[5]/ EMAC[1]_MRXD[1]/ VIN[1]A_D[2]/ UART4_TXD/ **GP3[2]**	AF25	I/O	IPD DVDD	VOUT[1], EMAC[1], VIN[1]A, UART4 PINCNTL210 DSIS: PIN	General-Purpose Input/Output (I/O) 3 [GP3] pin 2.
VOUT[1]_B_CB_C[4]/ EMAC[1]_MRXD[0]/ VIN[1]A_D[1]/ UART4_RXD/ **GP3[1]**	AG25	I/O	IPD DVDD	VOUT[1], EMAC[1], VIN[1]A, UART4 PINCNTL209 DSIS: PIN	General-Purpose Input/Output (I/O) 3 [GP3] pin 1.
VOUT[1]_B_CB_C[3]/ EMAC[1]_MRCLK/ VIN[1]A_D[0]/ UART4_CTS/ **GP3[0]**	AH25	I/O	IPD DVDD	VOUT[1], EMAC[1], VIN[1]A, UART4 PINCNTL208 DSIS: PIN	General-Purpose Input/Output (I/O) 2 [GP2] pin 0.

3.2.8 GPMC

Table 3-14. GPMC Terminal Functions

SIGNAL NAME	NO.	TYPE(1)	OTHER(2) (3)	MUXED	DESCRIPTION
GPMC_CLK/ GPMC_CS[5]/ GPMC_WAIT[1]/ CLKOUT1/ EDMA_EVT3/ TIM4_IO/ GP1[27]	R26	O	IPU DVDD_GPMCB	GPMC, CLKOUT1, EDMA, TIMER4, GP1 PINCNTL127 DSIS: 0	GPMC Clock output
SD2_DAT[4]/ GPMC_A[27]/ GPMC_A[23]/ **GPMC_CS[7]**/ EDMA_EVT0/ TIM7_IO/ GP1[22]	R24	O	IPU DVDD_GPMC	SD2, GPMC, EDMA, TIMER7, GP1 PINCNTL116 DSIS: N/A	GPMC Chip Select 7
GPMC_ADV_ALE/ **GPMC_CS[6]**/ TIM5_IO/ GP1[28]	M26	O	IPU DVDD_GPMCB	GPMC, TIMER5, GP1 PINCNTL128 DSIS: N/A	GPMC Chip Select 6
GPMC_CLK/ **GPMC_CS[5]**/ GPMC_WAIT[1]/ CLKOUT1/ EDMA_EVT3/ TIM4_IO/ GP1[27]	R26	O	IPU DVDD_GPMCB	GPMC, CLKOUT1, EDMA, TIMER4, GP1 PINCNTL127 DSIS: N/A	GPMC Chip Select 5
GPMC_CS[4]/ SD2_CMD/ GP1[8]	P25	O	IPU DVDD_GPMC	SD2, GP1 PINCNTL126 DSIS: N/A	GPMC Chip Select 4
GPMC_CS[3]/ VIN[1]B_CLK/ SPI[2]_SCS[0]/ GP1[26]	P26	O	IPU DVDD_GPMC	VIN[1]B, SPI[2], GP1 PINCNTL125 DSIS: N/A	GPMC Chip Select 3
GPMC_CS[2]/ GPMC_A[24]/ GP1[25]	M25	O	IPU DVDD_GPMC	GPMC, GP1 PINCNTL124 DSIS: N/A	GPMC Chip Select 2
GPMC_CS[1]/ GPMC_A[25]/ GP1[24]	K28	O	IPU DVDD_GPMCB	GPMC, GP1 PINCNTL123 DSIS: N/A	GPMC Chip Select 1
GPMC_CS[0]/ GP1[23]	T28	O	IPU DVDD_GPMCB	GP1 PINCNTL122 DSIS: N/A	GPMC Chip Select 0
GPMC_WE	U28	O	IPU DVDD_GPMCB	– PINCNTL130 DSIS: N/A	GPMC Write Enable output
GPMC_OE_RE	T27	O	IPU DVDD_GPMCB	– PINCNTL129 DSIS: N/A	GPMC Output Enable output
GPMC_BE[1]/ GPMC_A[24]/ EDMA_EVT1/ TIM7_IO/ GP1[30]	V28	O	IPD DVDD_GPMCB	GPMC, EDMA, TIMER7, GP1 PINCNTL132 DSIS: N/A	GPMC Upper Byte Enable output

(1) I = Input, O = Output, Z = High impedance, S = Supply voltage, GND = Ground, A = Analog signal, MM = Multi Muxed, DSIS = De-selected Input State
(2) IPD = Internal Pulldown Active, IPU = Internal Pullup Active, DIS = Internal Pull Disabled. This represents the default state of the Internal Pull after Reset. For more detailed information on pullup/pulldown resistors and situations where external pullup/pulldown resistors are required, see Section 4.5.1, *Pullup/Pulldown Resistors* and the Section 7.3.17, *Pin Behaviors at Reset*.
(3) Specifies the operating I/O supply voltage for each signal

Copyright © 2011–2013, Texas Instruments Incorporated

Table 3-14. GPMC Terminal Functions (continued)

SIGNAL NAME	NO.	TYPE(1)	OTHER(2) (3)	MUXED	DESCRIPTION
GPMC_$\overline{\text{BE[0]}}$_CLE/ GPMC_A[25]/ EDMA_EVT2/ TIM6_IO/ GP1[29]	U27	O	IPD DVDD_GPMCB	GPMC, EDMA, TIMER6, GP1 PINCNTL131 DSIS: PIN	GPMC Lower Byte Enable output or Command Latch Enable output
GPMC_$\overline{\text{ADV}}$_ALE/ GPMC_CS[6]/ TIM5_IO/ GP1[28]	M26	O	IPU DVDD_GPMCB	GPMC, TIMER5, GP1 PINCNTL128 DSIS: N/A	GPMC Address Valid output or Address Latch Enable output
GPMC_CLK/ GPMC_CS[5]/ **GPMC_WAIT[1]/** CLKOUT1/ EDMA_EVT3/ TIM4_IO/ GP1[27]	R26	I	IPU DVDD_GPMCB	GPMC, CLKOUT1, EDMA, TIMER4, GP1 PINCNTL127 DSIS: 1	GPMC Wait input 1
GPMC_WAIT[0]/ GPMC_A[26]/ EDMA_EVT0/ GP1[31]	W28	I	IPU DVDD_GPMCB	GPMC, EDMA, GP1 PINCNTL133 DSIS: 1	GPMC Wait input 0
EMAC[0]_MRXD[3]/ EMAC[1]_RGRXCTL/ **GPMC_A[27]/** GPMC_A[26]/ GPMC_A[0]/ UART5_RXD	J25	O	IPD DVDD_GPMC	EMAC[0], EMAC[1], GPMC, UART5 PINCNTL243 DSIS: N/A MM: MUX1	GPMC Address 27
SD2_DAT[4]/ **GPMC_A[27]/** GPMC_A[23]/ GPMC_CS[7]/ EDMA_EVT0/ TIM7_IO/ GP1[22]	R24	O	IPU DVDD_GPMC	SD2, GPMC, EDMA, TIMER7, GP1 PINCNTL116 DSIS: N/A MM: MUX0	
GPMC_WAIT[0]/ **GPMC_A[26]/** EDMA_EVT0/ GP1[31]	W28	O	IPU DVDD_GPMCB	GPMC, EDMA, GP1 PINCNTL133 DSIS: N/A MM: MUX2	GPMC Address 26
EMAC[0]_MRXD[3]/ EMAC[1]_RGRXCTL/ GPMC_A[27]/ **GPMC_A[26]/** GPMC_A[0]/ UART5_RXD	J25	O	IPD DVDD_GPMC	EMAC[0], EMAC[1], GPMC, UART5 PINCNTL243 DSIS: N/A MM: MUX1	
SD2_DAT[5]/ **GPMC_A[26]/** GPMC_A[22]/ TIM6_IO/ GP1[21]	P22	O	IPU DVDD_GPMC	SD2, GPMC, TIMER6, GP1 PINCNTL115 DSIS: N/A MM: MUX0	

Table 3-14. GPMC Terminal Functions (continued)

SIGNAL NAME	NO.	TYPE(1)	OTHER(2) (3)	MUXED	DESCRIPTION
GPMC_BE[0]_CLE/ **GPMC_A[25]**/ EDMA_EVT2/ TIM6_IO/ GP1[29]	U27	O	IPD DVDD_GPMCB	GPMC, EDMA, TIMER6, GP1 PINCNTL131 DSIS: N/A MM: MUX2	GPMC Address 25
GPMC_CS[1]/ **GPMC_A[25]**/ GP1[24]	K28	O	IPU DVDD_GPMCB	GPMC, GP1 PINCNTL123 DSIS: N/A MM: MUX1	
SD2_DAT[6]/ **GPMC_A[25]**/ GPMC_A[21]/ UART2_TXD/ GP1[20]	N23	O	IPU DVDD_GPMC	SD2, GPMC, UART2, GP1 PINCNTL114 DSIS: N/A MM: MUX0	
GPMC_BE[1]/ **GPMC_A[24]**/ EDMA_EVT1/ TIM7_IO/ GP1[30]	V28	O	IPD DVDD_GPMCB	GPMC, EDMA, TIMER7, GP1 PINCNTL132 DSIS: N/A MM: MUX2	GPMC Address 24
GPMC_CS[2]/ **GPMC_A[24]**/ GP1[25]	M25	O	IPU DVDD_GPMC	GPMC, GP1 PINCNTL124 DSIS: N/A MM: MUX1	
SD2_DAT[7]/ **GPMC_A[24]**/ GPMC_A[20]/ UART2_RXD/ GP1[19]	L25	O	IPU DVDD_GPMC	SD2, GPMC, UART2, GP1 PINCNTL113 DSIS: N/A MM: MUX0	
SD2_DAT[4]/ GPMC_A[27]/ **GPMC_A[23]**/ GPMC_CS[7]/ EDMA_EVT0/ TIM7_IO/ GP1[22]	R24	O	IPU DVDD_GPMC	SD2, GPMC, EDMA, TIMER5, GP1 PINCNTL116 DSIS: N/A MM: MUX1	GPMC Address 23
GPMC_A[23]/ SPI[2]_SCLK/ HDMI_HPDET/ TIM5_IO/ GP1[18]	AA26	O	IPD DVDD_GPMCB	SPI[2], HDMI, TIMER5, GP1 PINCNTL112 DSIS: N/A MM: MUX0	
SD2_DAT[5]/ GPMC_A[26]/ **GPMC_A[22]**/ TIM6_IO/ GP1[21]	P22	O	IPU DVDD_GPMC	SD2, GPMC, TIMER6, GP1 PINCNTL115 DSIS: N/A MM: MUX1	GPMC Address 22
GPMC_A[22]/ SPI[2]_D[1]/ HDMI_CEC/ TIM4_IO/ GP1[17]	AB27	O	IPU DVDD_GPMCB	SPI[2], HDMI, TIMER4, GP1 PINCNTL111 DSIS: N/A MM: MUX0	
SD2_DAT[6]/ GPMC_A[25]/ **GPMC_A[21]**/ UART2_TXD/ GP1[20]	N23	O	IPU DVDD_GPMC	SD2, GPMC, UART2, GP1 PINCNTL114 DSIS: N/A MM: MUX1	GPMC Address 21
GPMC_A[21]/ SPI[2]_D[0]/ GP1[16]	AC28	O	IPD DVDD_GPMCB	SPI[2], GP1 PINCNTL110 DSIS: N/A MM: MUX0	

Copyright © 2011–2013, Texas Instruments Incorporated

Table 3-14. GPMC Terminal Functions (continued)

SIGNAL NAME	NO.	TYPE(1)	OTHER(2) (3)	MUXED	DESCRIPTION
SD2_DAT[7]/ GPMC_A[24]/ **GPMC_A[20]**/ UART2_RXD/ GP1[19]	L25	O	IPU DVDD_GPMC	SD2, GPMC, UART2, GP1 PINCNTL113 DSIS: N/A MM: MUX1	GPMC Address 20
GPMC_A[20]/ SPI[2]_SCS[1]/ GP1[15]	AD28	O	IPU DVDD_GPMCB	SPI[2], GP1 PINCNTL109 DSIS: N/A MM: MUX0	
GPMC_A[19]/ TIM3_IO/ GP1[14]	AC27	O	IPD DVDD_GPMCB	TIMER2, GP1 PINCNTL108 DSIS: N/A	GPMC Address 19
GPMC_A[18]/ TIM2_IO/ GP1[13]	AE28	O	IPD DVDD_GPMCB	TIMER2, GP1 PINCNTL107 DSIS: N/A	GPMC Address 18
GPMC_A[17]/ GP2[6]	V23	O	IPD DVDD_GPMCB	GP2 PINCNTL106 DSIS: N/A	GPMC Address 17
GPMC_A[16]/ GP2[5]	AD27	O	IPD DVDD_GPMCB	GP2 PINCNTL105 DSIS: N/A	GPMC Address 16
VOUT[1]_R_CR[2]/ **GPMC_A[15]**/ VIN[1]A_D[23]/ HDMI_HPDET/ SPI[2]_D[1]/ GP3[22]	AE27	O	IPD DVDD	VOUT[1], VIN[1]A, HDMI, SPI[2],GP3 PINCNTL230 DSIS: N/A MM: MUX1	GPMC Address 15
EMAC[0]_MTXEN/ EMAC[1]_RGRXD[2]/ EMAC[1]_RMTXEN/ **GPMC_A[15]**/ UART1_RTS	J23	O	IPD DVDD_GPMC	EMAC[0], EMAC[1], UART1 PINCNTL258 DSIS: N/A MM: MUX0	
VOUT[1]_R_CR[3]/ **GPMC_A[14]**/ VIN[1]A_D[22]/ HDMI_SDA/ SPI[2]_SCLK/ I2C[2]_SDA/ GP3[21]	AG28	O	IPU DVDD	VOUT[1], VIN[1]A, HDMI, SPI[2], I2C[2], GP3 PINCNTL229 DSIS: N/A MM: MUX1	GPMC Address 14
EMAC[0]_MTXD[7]/ EMAC[1]_RGTXD[3]/ EMAC[1]_RMTXD[1]/ **GPMC_A[14]**/ UART1_CTS	H24	O	IPD DVDD_GPMC	EMAC[0], EMAC[1], UART1 PINCNTL257 DSIS: N/A MM: MUX0	
VOUT[1]_G_Y_YC[2]/ **GPMC_A[13]**/ VIN[1]A_D[21]/ HDMI_SCL/ SPI[2]_SCS[2]/ I2C[2]_SCL/ GP3[20]	AF27	O	IPU DVDD	VOUT[1], VIN[1]A, HDMI, SPI[2], I2C[2], GP3 PINCNTL228 DSIS: N/A MM: MUX1	GPMC Address 13
EMAC[0]_MTXD[6]/ EMAC[1]_RGRXD[0]/ EMAC[1]_RMTXD[0]/ **GPMC_A[13]**/ UART1_TXD	J22	O	IPD DVDD_GPMC	EMAC[0], EMAC[1], UART1 PINCNTL256 DSIS: N/A MM: MUX0	

Copyright © 2011–2013, Texas Instruments Incorporated

Table 3-14. GPMC Terminal Functions (continued)

SIGNAL NAME	NO.	TYPE(1)	OTHER(2) (3)	MUXED	DESCRIPTION
VOUT[0]_FLD/ CAM_PCLK/ **GPMC_A[12]**/ UART2_RTS/ GP2[2]	AF18	O	IPD DVDD_C	VOUT[0], CAMERA_I/F, UART2, GP2 PINCNTL175 DSIS: N/A MM: MUX1	GPMC Address 12
EMAC[0]_MTXD[5]/ EMAC[1]_RGTXC/ EMAC[1]_RMCRSDV/ **GPMC_A[12]**/ UART1_RXD	F27	O	IPD DVDD_GPMC	EMAC[0], EMAC[1], UART1 PINCNTL255 DSIS: N/A MM: MUX0	
VOUT[1]_FLD/ CAM_FLD/ CAM_WE/ **GPMC_A[11]**/ UART2_CTS/ GP0[28]	AB23	O	IPD DVDD_C	VOUT[1], CAMERA_I/F, UART2, GP0 PINCNTL174 DSIS: N/A MM: MUX1	GPMC Address 11
EMAC[0]_MTXD[4]/ EMAC[1]_RGTXD[2]/ EMAC[1]_RMRXER/ **GPMC_A[11]**/ UART4_RTS	G23	O	IPD DVDD_GPMC	EMAC[0], EMAC[1], UART4 PINCNTL254 DSIS: N/A MM: MUX0	
VOUT[1]_B_CB_C[0]/ CAM_VS/ **GPMC_A[10]**/ UART2_TXD/ GP0[27]	AD23	O	IPU DVDD_C	VOUT[1], CAMERA_I/F, UART2, GP0 PINCNTL173 DSIS: N/A MM: MUX1	GPMC Address 10
EMAC[0]_MTXD[3]/ EMAC[1]_RGTXD[0]/ EMAC[1]_RMRXD[1]/ **GPMC_A[10]**/ UART4_CTS	H23	O	IPD DVDD_GPMC	EMAC[0], EMAC[1], UART4 PINCNTL253 DSIS: N/A MM: MUX0	
VOUT[1]_B_CB_C[1]/ CAM_HS/ **GPMC_A[9]**/ UART2_RXD/ GP0[26]	AE23	O	IPD DVDD_C	VOUT[1], CAMERA_I/F, UART2, GP0 PINCNTL172 DSIS: N/A MM: MUX1	GPMC Address 9
EMAC[0]_MTXD[2]/ EMAC[1]_RGTXCTL/ EMAC[1]_RMRXD[0]/ **GPMC_A[9]**/ UART4_TXD	H22	O	IPD DVDD_GPMC	EMAC[0], EMAC[1], UART4 PINCNTL252 DSIS: N/A MM: MUX0	
VOUT[1]_R_CR[0]/ CAM_D[0]/ **GPMC_A[8]**/ UART4_RTS/ GP0[25]	AA22	O	IPD DVDD_C	VOUT[1], CAMERA_I/F, UART4, GP0 PINCNTL171 DSIS: N/A MM: MUX1	GPMC Address 8
EMAC[0]_MTXD[1]/ EMAC[1]_RGTXD[1]/ **GPMC_A[8]**/ UART4_RXD	H25	O	IPD DVDD_GPMC	EMAC[0], EMAC[1], UART4 PINCNTL251 DSIS: N/A MM: MUX0	

Copyright © 2011–2013, Texas Instruments Incorporated

Table 3-14. GPMC Terminal Functions (continued)

SIGNAL NAME	NO.	TYPE(1)	OTHER(2) (3)	MUXED	DESCRIPTION
VOUT[1]_R_CR[1]/ CAM_D[1]/ **GPMC_A[7]**/ UART4_CTS/ GP0[24]	AC19	O	IPD DVDD_C	VOUT[1], CAMERA_I/F, UART4, GP0 PINCNTL170 DSIS: N/A MM: MUX1	GPMC Address 7
EMAC[0]_MTXD[0]/ EMAC[1]_RGRXD[3]/ **GPMC_A[7]**/ SPI[2]_D[0]	J24	O	IPD DVDD_GPMC	EMAC[0], EMAC[1], SPI[2] PINCNTL250 DSIS: N/A MM: MUX0	
VOUT[1]_G_Y_YC[0]/ CAM_D[2]/ **GPMC_A[6]**/ UART4_TXD/ GP0[23]	AC18	O	IPD DVDD_C	VOUT[1], CAMERA_I/F, UART4, GP0 PINCNTL169 DSIS: N/A MM: MUX1	GPMC Address 6
EMAC[0]_GMTCLK/ EMAC[1]_RGRXC/ **GPMC_A[6]**/ SPI[2]_D[1]	K23	O	IPD DVDD_GPMC	EMAC[0], EMAC[1], SPI[2] PINCNTL249 DSIS: N/A MM: MUX0	
VOUT[1]_G_Y_YC[1]/ CAM_D[3]/ **GPMC_A[5]**/ UART4_RXD/ GP0[22]	AD18	O	IPU DVDD_C	VOUT[1], CAMERA_I/F, UART4, GP0 PINCNTL168 DSIS: N/A MM: MUX1	GPMC Address 5
EMAC[0]_MRXDV/ EMAC[1]_RGRXD[1]/ **GPMC_A[5]**/ SPI[2]_SCLK	K22	O	IPD DVDD_GPMC	EMAC[0], EMAC[1], SPI[2] PINCNTL248 DSIS: N/A MM: MUX0	
SD2_DAT[0]/ **GPMC_A[4]**/ GP1[14]	L26	O	IPU DVDD_GPMCB	SD2, GP1 PINCNTL120 DSIS: N/A MM: MUX1	GPMC Address 4
EMAC[0]_MRXD[7]/ EMAC[0]_RGTXD[1]/ **GPMC_A[4]**/ SPI[2]_SCS[3]	G27	O	IPD DVDD_GPMC	EMAC[0], SPI[2] PINCNTL247 DSIS: N/A MM: MUX0	
SD2_DAT[1]_ $\overline{\text{SDIRQ}}$/ **GPMC_A[3]**/ GP1[13]	M24	O	IPU DVDD_GPMC	SD2, GP1 PINCNTL119 DSIS: N/A MM: MUX1	GPMC Address 3
EMAC[0]_MRXD[6]/ EMAC[0]_RGTXD[2]/ **GPMC_A[3]**/ UART5_RTS	F28	O	IPD DVDD_GPMC	EMAC[0], UART5 PINCNTL246 DSIS: N/A MM: MUX0	
SD2_DAT[2]_SDR$\overline{\text{W}}$/ **GPMC_A[2]**/ GP2[6]	K27	O	IPU DVDD_GPMC	SD2, GP2 PINCNTL118 DSIS: N/A MM: MUX1	GPMC Address 2
EMAC[0]_MRXD[5]/ EMAC[0]_RGTXD[3]/ **GPMC_A[2]**/ UART5_CTS	H26	O	IPD DVDD_GPMC	EMAC[0], UART5 PINCNTL245 DSIS: N/A MM: MUX0	

Copyright © 2011–2013, Texas Instruments Incorporated

Table 3-14. GPMC Terminal Functions (continued)

SIGNAL NAME	SIGNAL NO.	TYPE(1)	OTHER(2) (3)	MUXED	DESCRIPTION
SD2_DAT[3]/ **GPMC_A[1]**/ GP2[5]	J28	O	IPU DVDD_GPMC	SD2, GP2 PINCNTL117 DSIS: N/A MM: MUX1	GPMC Address 1
EMAC[0]_MRXD[4]/ EMAC[0]_RGRXD[3]/ **GPMC_A[1]**/ UART5_TXD	T23	O	IPD DVDD_GPMC	EMAC[0], UART5 PINCNTL244 DSIS: N/A MM: MUX0	
VOUT[1]_B_CB_C[2]/ **GPMC_A[0]**/ VIN[1]A_D[7]/ HDMI_CEC/ SPI[2]_D[0]/ GP3[30]	AF28	O	IPU DVDD	VOUT[1], VIN[1]A, HDMI, SPI[2], GP3 PINCNTL231 DSIS: N/A MM: MUX1	GPMC Address 0
EMAC[0]_MRXD[3]/ EMAC[1]_RGRXCTL/ GPMC_A[27]/ GPMC_A[26]/ **GPMC_A[0]**/ UART5_RXD	J25	O	IPD DVDD_GPMC	EMAC[0], EMAC[1], GPMC, UART5 PINCNTL243 DSIS: N/A MM: MUX0	

Copyright © 2011–2013, Texas Instruments Incorporated

Table 3-14. GPMC Terminal Functions (continued)

SIGNAL NAME	NO.	TYPE(1)	OTHER(2) (3)	MUXED	DESCRIPTION
GPMC_D[15]/ BTMODE[15]	Y25	I/O	DIS DVDD_GPMCB	BTMODE PINCNTL104 DSIS: PIN	GPMC Multiplexed Data/Address I/Os.
GPMC_D[14]/ BTMODE[14]	V24	I/O	DIS DVDD_GPMCB	BTMODE PINCNTL103 DSIS: PIN	
GPMC_D[13]/ BTMODE[13]	U23	I/O	DIS DVDD_GPMCB	BTMODE PINCNTL102 DSIS: PIN	
GPMC_D[12]/ BTMODE[12]	U24	I/O	DIS DVDD_GPMCB	BTMODE PINCNTL101 DSIS: PIN	
GPMC_D[11]/ BTMODE[11]	AA27	I/O	DIS DVDD_GPMCB	BTMODE PINCNTL100 DSIS: PIN	
GPMC_D[10]/ BTMODE[10]	Y26	I/O	DIS DVDD_GPMCB	BTMODE PINCNTL99 DSIS: PIN	
GPMC_D[9]/ BTMODE[9]	AB28	I/O	DIS DVDD_GPMCB	BTMODE PINCNTL98 DSIS: PIN	
GPMC_D[8]/ BTMODE[8]	Y27	I/O	DIS DVDD_GPMCB	BTMODE PINCNTL97 DSIS: PIN	
GPMC_D[7]/ BTMODE[7]	V25	I/O	DIS DVDD_GPMCB	BTMODE PINCNTL96 DSIS: PIN	
GPMC_D[6]/ BTMODE[6]	U25	I/O	DIS DVDD_GPMCB	BTMODE PINCNTL95 DSIS: PIN	
GPMC_D[5]/ BTMODE[5]	AA28	I/O	DIS DVDD_GPMCB	BTMODE PINCNTL94 DSIS: PIN	
GPMC_D[4]/ BTMODE[4]	V26	I/O	DIS DVDD_GPMCB	BTMODE PINCNTL93 DSIS: PIN	
GPMC_D[3]/ BTMODE[3]	W27	I/O	DIS DVDD_GPMCB	BTMODE PINCNTL92 DSIS: PIN	
GPMC_D[2]/ BTMODE[2]	V27	I/O	DIS DVDD_GPMCB	BTMODE PINCNTL91 DSIS: PIN	
GPMC_D[1]/ BTMODE[1]	Y28	I/O	DIS DVDD_GPMCB	BTMODE PINCNTL90 DSIS: PIN	
GPMC_D[0]/ BTMODE[0]	U26	I/O	DIS+ DVDD_GPMCB	BTMODE PINCNTL89 DSIS: PIN	

3.2.9 HDMI

Table 3-15. HDMI Terminal Functions

SIGNAL NAME	NO.	TYPE(1)	OTHER(2) (3)	MUXED	DESCRIPTION
HDMI_CLKP	AG18	O	– VDDA_HDMI_1P8	–	HDMI Clock Output. When the HDMI PHY is powered down, these pins should be left unconnected.
HDMI_CLKN	AH18	O	– VDDA_HDMI_1P8	–	
HDMI_DN2	AH21	O	– VDDA_HDMI_1P8	–	HDMI Data 2 output. When the HDMI PHY is powered down, these pins should be left unconnected.
HDMI_DP2	AG21	O	– VDDA_HDMI_1P8	–	
HDMI_DN1	AH20	O	– VDDA_HDMI_1P8	–	HDMI Data 1 output. When the HDMI PHY is powered down, these pins should be left unconnected.
HDMI_DP1	AG20	O	– VDDA_HDMI_1P8	–	
HDMI_DN0	AH19	O	– VDDA_HDMI_1P8	–	HDMI Data 0 output. When the HDMI PHY is powered down, these pins should be left unconnected.
HDMI_DP0	AG19	O	– VDDA_HDMI_1P8	–	
VOUT[1]_G_Y_YC[2]/ GPMC_A[13]/ VIN[1]A_D[21]/ **HDMI_SCL**/ SPI[2]_SCS[2]/ I2C[2]_SCL/ GP3[20]	AF27	I/O	IPU DVDD	VOUT[1], GPMC, VIN[1]ASPI[2], I2C[2], GP3 PINCNTL228 DSIS: 1 MM: MUX1	HDMI I2C Serial Clock Output
I2C[1]_SCL/ **HDMI_SCL**	AF24	I/O	DVDD	I2C[1] PINCNTL78 DSIS: 1 MM: MUX0	
VOUT[1]_R_CR[3]/ GPMC_A[14]/ VIN[1]A_D[22]/ **HDMI_SDA**/ SPI[2]_SCLK/ I2C[2]_SDA/ GP3[21]	AG28	I/O	IPU DVDD	VOUT[1], GPMC, VIN[1]ASPI[2], I2C[2], GP3 PINCNTL229 DSIS: 1 MM: MUX1	HDMI I2C Serial Data I/O
I2C[1]_SDA/ **HDMI_SDA**	AG24	I/O	DVDD	I2C[1] PINCNTL79 DSIS: 1 MM: MUX0	

(1) I = Input, O = Output, Z = High impedance, S = Supply voltage, GND = Ground, A = Analog signal, MM = Multi Muxed, DSIS = De-selected Input State
(2) IPD = Internal Pulldown Active, IPU = Internal Pullup Active, DIS = Internal Pull Disabled. This represents the default state of the Internal Pull after Reset. For more detailed information on pullup/pulldown resistors and situations where external pullup/pulldown resistors are required, see Section 4.5.1, *Pullup/Pulldown Resistors* and Section 7.3.17, *Pin Behaviors at Reset*.
(3) Specifies the operating I/O supply voltage for each signal

Copyright © 2011–2013, Texas Instruments Incorporated

Table 3-15. HDMI Terminal Functions (continued)

SIGNAL NAME	NO.	TYPE(1)	OTHER(2) (3)	MUXED	DESCRIPTION
VOUT[1]_B_CB_C[2]/ GPMC_A[0]/ VIN[1]A_D[7]/ **HDMI_CEC**/ SPI[2]_D[0]/ GP3[30]	AF28	I/O	IPU DVDD	VOUT[1], GPMC, VIN[1]A, SPI[2], GP3 PINCNTL231 DSIS: 1 MM: MUX1	HDMI Consumer Electronics Control I/O
GPMC_A[22]/ SPI[2]_D[1]/ **HDMI_CEC**/ TIM4_IO/ GP1[17]	AB27	I/O	IPU DVDD_GPMC	GPMC, SPI[2], TIMER4, GP1 PINCNTL111 DSIS: 1 MM: MUX0	
VOUT[1]_R_CR[2]/ GPMC_A[15]/ VIN[1]A_D[23]/ **HDMI_HPDET**/ SPI[2]_D[1]/ GP3[22]	AE27	I	IPD DVDD	VOUT[1], GPMC, VIN[1]ASPI[2], GP3 PINCNTL230 DSIS: 0 MM: MUX1	HDMI Hot Plug Detect Input. Signals the connection / removal of an HDMI cable at the connector.
GPMC_A[23]/ SPI[2]_SCLK/ **HDMI_HPDET**/ TIM5_IO/ GP1[18]	AA26	I	IPD DVDD_GPMC	GPMC, SPI[2], TIMER5, GP1 PINCNTL112 DSIS: 0 MM: MUX0	

3.2.10 I2C

Table 3-16. I2C Terminal Functions

SIGNAL NAME	NO.	TYPE(1)	OTHER(2) (3)	MUXED	DESCRIPTION
I2C[0]					
I2C[0]_SCL	AC4	I/O	DVDD	– PINCNTL263	I2C[0] Clock I/O. For proper device operation, this pin ***must*** be pulled up via external resistor.
I2C[0]_SDA	AB6	I/O	DVDD	– PINCNTL264	I2C[0] Data I/O. For proper device operation, this pin ***must*** be pulled up via external resistor.
I2C[1]					
I2C[1]_SCL/ HDMI_SCL	AF24	I/O	DVDD	HDMI PINCNTL78 DSIS: 1	I2C[1] Clock I/O. For proper device operation in I2C mode, this pin ***must*** be pulled up via external resistor.
I2C[1]_SDA/ HDMI_SDA	AG24	I/O	DVDD	HDMI PINCNTL79 DSIS: 1	I2C[1] Data I/O. For proper device operation in I2C mode, this pin ***must*** be pulled up via external resistor.
I2C[2]					
VIN[0]A_FLD/ VIN[0]B_VSYNC/ UART5_RXD/ **I2C[2]_SCL**/ GP2[1]	AA20	I/O	IPU DVDD	VIN[0]A, VIN[0]B,UART5, GP2 PINCNTL136 DSIS: 1 MM: MUX3	I2C[2] Clock I/O. For proper device operation in I2C mode, this pin ***must*** be pulled up via external resistor.
VOUT[1]_G_Y_YC[2]/ GPMC_A[13]/ VIN[1]A_D[21]/ HDMI_SCL/ SPI[2]_SCS[2]/ **I2C[2]_SCL**/ GP3[20]	AF27	I/O	IPU DVDD	VOUT[1], GPMC, VIN[1]A, HDMI, SPI[2], GP3 PINCNTL228 DSIS: 1 MM: MUX2	
VIN[0]A_D[16]/ CAM_D[8]/ **I2C[2]_SCL**/ GP0[10]	AA21	I/O	IPU DVDD_C	VIN[0]A, CAM I/F, GP0 PINCNTL156 DSIS: 1 MM: MUX1	
UART0_DCD/ UART3_RXD/ SPI[0]_SCS[3]/ **I2C[2]_SCL**/ SD1_POW/ GP1[2]	AH4	I/O	IPU DVDD	UART0, UART3, SPI[0], SD1, GP1 PINCNTL74 DSIS: 1 MM: MUX0	

(1) I = Input, O = Output, Z = High impedance, S = Supply voltage, GND = Ground, A = Analog signal, MM = Multi Muxed, DSIS = De-selected Input State
(2) IPD = Internal Pulldown Active, IPU = Internal Pullup Active, DIS = Internal Pull Disabled. This represents the default state of the Internal Pull after Reset. For more detailed information on pullup/pulldown resistors and situations where external pullup/pulldown resistors are required, see Section 4.5.1, *Pullup/Pulldown Resistors* and the Section 7.3.17, *Pin Behaviors at Reset*.
(3) Specifies the operating I/O supply voltage for each signal

Copyright © 2011–2013, Texas Instruments Incorporated

Table 3-16. I2C Terminal Functions (continued)

SIGNAL NAME	NO.	TYPE(1)	OTHER(2) (3)	MUXED	DESCRIPTION
EMAC[0]_MTCLK/ EMAC[0]_RGRXC/ VIN[1]B_D[0]/ SPI[3]_SCS[3]/ **I2C[2]_SDA**/ GP3[23]	L24	I/O	IPD DVDD_GPMC	EMAC[0], VIN[1]B, SPI[3], GP3 PINCNTL235 DSIS: 1 MM: MUX3	I2C[2] Data I/O. For proper device operation in I2C mode, this pin ***must*** be pulled up via external resistor.
VOUT[1]_R_CR[3]/ GPMC_A[14]/ VIN[1]A_D[22]/ HDMI_SDA/ SPI[2]_SCLK/ **I2C[2]_SDA**/ GP3[21]	AG28	I/O	IPU DVDD	VOUT[1], GPMC, VIN[1]A, HDMI, SPI[2], GP3 PINCNTL229 DSIS: 1 MM: MUX2	
VIN[0]A_DE/ VIN[0]B_HSYNC/ UART5_TXD/ **I2C[2]_SDA**/ GP2[0]	AE21	I/O	IPU DVDD	VIN[0]A, VIN[0]B, UART5, GP2 PINCNTL135 DSIS: 1 MM: MUX1	
UART0_DSR/ UART3_TXD/ SPI[0]_SCS[2]/ **I2C[2]_SDA**/ SD1_SDWP/ GP1[3]	AG4	I/O	IPU DVDD	UART0, UART3, SPI[0], SD1, GP1 PINCNTL75 DSIS: 1 MM: MUX0	
I2C3					
VOUT[1]_B_CB_C[8]/ EMAC[1]_MRXD[4]/ VIN[1]A_D[5]/ **I2C[3]_SCL**/ GP3[5]	AH26	I/O	IPD DVDD	VOUT[1], EMAC[1], VIN[1]A, GP3 PINCNTL213 DSIS: 1 MM: MUX3	I2C3 Clock I/O. For proper device operation in I2C mode, this pin ***must*** be pulled up via external resistor.
VIN[0]A_D[18]/ CAM_D[10]/ EMAC[1]_RMRXD[1]/ **I2C[3]_SCL**/ GP0[12]	AF20	I/O	IPU DVDD_C	VIN[0]A, CAM I/F, EMAC[1], GP0 PINCNTL158 DSIS: 1 MM: MUX2	
DCAN0_RX/ UART2_RXD/ **I2C[3]_SCL**/ GP1[1]	AG6	I/O	IPU DVDD	DCAN0, UART2, GP1 PINCNTL69 DSIS: 1 MM: MUX1	
MCA[0]_AXR[1]/ **I2C[3]_SCL**	J1	I/O	IPU DVDD	MCA[0] PINCNTL22 DSIS: 1 MM: MUX0	
VOUT[1]_B_CB_C[9]/ EMAC[1]_MRXD[5]/ VIN[1]A_D[6]/ **I2C[3]_SDA**/ GP3[6]	AA24	I/O	IPD DVDD	VOUT[1], EMAC[1], VIN[1]A, GP3 PINCNTL214 DSIS: 1 MM: MUX3	I2C3 Data I/O. For proper device operation in I2C mode, this pin ***must*** be pulled up via external resistor.
VIN[0]A_D[19]/ CAM_D[11]/ EMAC[1]_RMRXD[0]/ **I2C[3]_SDA**/ GP0[13]	AF21	I/O	IPU DVDD_C	VIN[0]A, CAM I/F, EMAC[1], GP0 PINCNTL159 DSIS: 1 MM: MUX2	
DCAN0_TX/ UART2_TXD/ **I2C[3]_SDA**/ GP1[0]	AH6	I/O	IPU DVDD	DCAN0, UART2, GP1 PINCNTL68 DSIS: 1 MM: MUX1	
MCA[0]_AXR[2]/ **I2C[3]_SDA**	L4	I/O	IPU DVDD	MCA[0] PINCNTL23 DSIS: 1 MM: MUX0	

Copyright © 2011–2013, Texas Instruments Incorporated

3.2.11 McASP

Table 3-17. McASP0 Terminal Functions

SIGNAL NAME	NO.	TYPE(1)	OTHER(2) (3)	MUXED	DESCRIPTION
McASP0					
MCA[0]_ACLKR/ MCA[5]_AXR[2]	K2	I/O	IPD DVDD	MCA[5] PINCNTL19 DSIS: 0	McASP0 Receive Bit Clock I/O
MCA[0]_AFSR/ MCA[5]_AXR[3]	K1	I/O	IPD DVDD	MCA[5] PINCNTL20 DSIS: 0	McASP0 Receive Frame Sync I/O
MCA[0]_ACLKX	R4	I/O	IPD DVDD	– PINCNTL17	McASP0 Transmit Bit Clock I/O
AUD_CLKIN0/ MCA[0]_AXR[7]/ **MCA[0]_AHCLKX**/ MCA[3]_AHCLKX/ USB1_DRVVBUS	L5	I/O	IPD DVDD	AUD_CLKIN0, MCA[0], MCA[3], USB1 PINCNTL14 DSIS: PIN	McASP0 Transmit High-Frequency Master Clock I/O
MCA[0]_AFSX	L3	I/O	IPD DVDD	– PINCNTL18	McASP0 Transmit Frame Sync I/O
AUD_CLKIN2/ **MCA[0]_AXR[9]**/ MCA[2]_AHCLKX/ MCA[5]_AHCLKX/ EDMA_EVT2/ TIM3_IO/ GP0[9]	H1	I/O	IPD DVDD	AUD_CLKIN2, MCA[1], MCA[4], EDMA, TIMER2, GP0 PINCNTL16 DSIS: PIN MM: MUX1	McASP0 Transmit/Receive Data I/Os
MCA[0]_AXR[9]/ MCB_CLKX/ MCB_CLKR	M6	I/O	IPD DVDD	MCB PINCNTL30 DSIS: PIN MM: MUX0	
AUD_CLKIN1/ **MCA[0]_AXR[8]**/ MCA[1]_AHCLKX/ MCA[4]_AHCLKX/ EDMA_EVT3/ TIM2_IO/ GP0[8]	R5	I/O	IPD DVDD	AUD_CLKIN1, MCA[1], MCA[4], EDMA, TIMER2, GP0 PINCNTL15 DSIS: PIN MM: MUX1	
MCA[0]_AXR[8]/ MCB_FSX/ MCB_FSR	L1	I/O	IPD DVDD	MCB PINCNTL29 DSIS: PIN MM: MUX0	
AUD_CLKIN0/ **MCA[0]_AXR[7]**/ MCA[0]_AHCLKX/ MCA[3]_AHCLKX/ USB1_DRVVBUS	L5	I/O	IPD DVDD	AUD_CLKIN0, MCA[0], MCA[3], USB1 PINCNTL14 DSIS: PIN MM: MUX1	
MCA[0]_AXR[7]/ MCB_DX	L2	I/O	IPD DVDD	MCB PINCNTL28 DSIS: PIN MM: MUX0	

(1) I = Input, O = Output, Z = High impedance, S = Supply voltage, GND = Ground, A = Analog signal, MM = Multi Muxed, DSIS = De-selected Input State
(2) IPD = Internal Pulldown Active, IPU = Internal Pullup Active, DIS = Internal Pull Disabled. This represents the default state of the Internal Pull during and after Reset. For more detailed information on pullup/pulldown resistors and situations where external pullup/pulldown resistors are required, see Section 4.5.1, *Pullup/Pulldown Resistors* and Section 7.3.17, *Pin Behaviors at Reset*.
(3) Specifies the operating I/O supply voltage for each signal

Copyright © 2011–2013, Texas Instruments Incorporated

Table 3-17. McASP0 Terminal Functions (continued)

SIGNAL NAME	NO.	TYPE(1)	OTHER(2) (3)	MUXED	DESCRIPTION
MCA[0]_AXR[6]/ MCB_DR	M4	I/O	IPD DVDD	MCB PINCNTL27 DSIS: PIN	McASP0 Transmit/Receive Data I/Os
MCA[0]_AXR[5]/ MCA[1]_AXR[9]	M3	I/O	IPD DVDD	MCA[1] PINCNTL26 DSIS: PIN	
MCA[0]_AXR[4]/ MCA[1]_AXR[8]	R6	I/O	IPD DVDD	MCA[1] PINCNTL25 DSIS: PIN	
MCA[0]_AXR[3]/	M5	I/O	IPD DVDD	PINCNTL24 DSIS: PIN	
MCA[0]_AXR[2]/ I2C[3]_SDA	L4	I/O	IPU DVDD	I2C[3] PINCNTL23 DSIS: PIN	
MCA[0]_AXR[1]/ I2C[3]_SCL	J1	I/O	IPU DVDD	I2C[3] PINCNTL22 DSIS: PIN	
MCA[0]_AXR[0]	J2	I/O	IPD DVDD	PINCNTL21 DSIS: PIN	

Table 3-18. McASP1 Terminal Functions

SIGNAL NAME	NO.	TYPE(1)	OTHER(2) (3)	MUXED	DESCRIPTION
McASP1					
MCA[1]_ACLKR/ MCA[1]_AXR[4]	M1	I/O	IPD DVDD	MCA[1] PINCNTL33 DSIS: 0	McASP1 Receive Bit Clock I/O
MCA[1]_AFSR/ MCA[1]_AXR[5]	M2	I/O	IPD DVDD	MCA[1] PINCNTL34 DSIS: 0	McASP1 Receive Frame Sync I/O
MCA[1]_ACLKX	U5	I/O	IPD DVDD	– PINCNTL31	McASP1 Transmit Bit Clock I/O
AUD_CLKIN1/ MCA[0]_AXR[8]/ **MCA[1]_AHCLKX**/ MCA[4]_AHCLKX/ EDMA_EVT3/ TIM2_IO/ GP0[8]	R5	I/O	IPD DVDD	AUD_CLKIN1, MCA[0], MCA[4], EDMA, TIMER2, GP0 PINCNTL15 DSIS: PIN	McASP1 Transmit High-Frequency Master Clock I/O
MCA[1]_AFSX	V3	I/O	IPD DVDD	– PINCNTL32	McASP1 Transmit Frame Sync I/O
MCA[3]_AXR[3]/ **MCA[1]_AXR[9]**/	J6	I/O	IPD DVDD	MCA[3] PINCNTL50 DSIS: PIN MM: MUX1	McASP1 Transmit/Receive Data I/Os
MCA[0]_AXR[5]/ **MCA[1]_AXR[9]**	M3	I/O	IPD DVDD	MCA[0] PINCNTL26 DSIS: PIN MM: MUX0	
MCA[3]_AXR[2]/ **MCA[1]_AXR[8]**/ GP0[20]	F2	I/O	IPD DVDD	MCA[3], GP0 PINCNTL49 DSIS: PIN MM: MUX1	
MCA[0]_AXR[4]/ **MCA[1]_AXR[8]**	R6	I/O	IPD DVDD	MCA[0] PINCNTL25 DSIS: PIN MM: MUX0	
MCA[2]_AXR[3]/ **MCA[1]_AXR[7]**/ TIM3_IO/ GP0[15]	H2	I/O	IPD DVDD	MCA[2], TIMER3, GP0 PINCNTL44 DSIS: PIN	
MCA[2]_AXR[2]/ **MCA[1]_AXR[6]**/ TIM2_IO/ GP0[14]	V5	I/O	IPD DVDD	MCA[2], TIMER2, GP0 PINCNTL43 DSIS: PIN	
MCA[1]_AFSR/ **MCA[1]_AXR[5]**	M2	I/O	IPD DVDD	MCA[1] PINCNTL34 DSIS: PIN	
MCA[1]_ACLKR/ **MCA[1]_AXR[4]**	M1	I/O	IPD DVDD	MCA[1] PINCNTL33 DSIS: PIN	
MCA[1]_AXR[3]/ MCB_CLKR	N6	I/O	IPD DVDD	MCB PINCNTL38 DSIS: PIN	
MCA[1]_AXR[2]/ MCB_FSR	R3	I/O	IPD DVDD	MCB PINCNTL37 DSIS: PIN	

(1) I = Input, O = Output, Z = High impedance, S = Supply voltage, GND = Ground, A = Analog signal, MM = Multi Muxed, DSIS = De-selected Input State
(2) IPD = Internal Pulldown Active, IPU = Internal Pullup Active, DIS = Internal Pull Disabled. This represents the default state of the Internal Pull during and after Reset. For more detailed information on pullup/pulldown resistors and situations where external pullup/pulldown resistors are required, see Section 4.5.1, *Pullup/Pulldown Resistors* and Section 7.3.17, *Pin Behaviors at Reset*.
(3) Specifies the operating I/O supply voltage for each signal

Copyright © 2011–2013, Texas Instruments Incorporated

Table 3-18. McASP1 Terminal Functions (continued)

SIGNAL NAME	NO.	TYPE(1)	OTHER(2) (3)	MUXED	DESCRIPTION
MCA[1]_AXR[1]/ SD0_DAT[5]/	T6	I/O	IPU DVDD	SD0 PINCNTL36 DSIS: PIN	McASP1 Transmit/Receive Data I/Os
MCA[1]_AXR[0]/ SD0_DAT[4]/	V4	I/O	IPU DVDD	SD0 PINCNTL35 DSIS: PIN	

Table 3-19. McASP2 Terminal Functions

SIGNAL NAME	NO.	TYPE(1)	OTHER(2) (3)	MUXED	DESCRIPTION
McASP2					
MCA[2]_ACLKX/ GP0[10]	U6	I/O	IPU DVDD	GP0 PINCNTL39 DSIS: 0	McASP2 Transmit Bit Clock I/O
AUD_CLKIN2/ MCA[0]_AXR[9]/ **MCA[2]_AHCLKX**/ MCA[5]_AHCLKX/ EDMA_EVT2/ TIM3_IO/ GP0[9]	H1	I/O	IPD DVDD	AUD_CLKIN2, MCA[0], MCA[5], EDMA, TIMER3, GP0 PINCNTL16 DSIS: PIN	McASP2 Transmit High-Frequency Master Clock I/O
MCA[2]_AFSX/ GP0[11]	AA5	I/O	IPU DVDD	GP0 PINCNTL40 DSIS: 0	McASP2 Transmit Frame Sync I/O
MCA[2]_AXR[3]/ MCA[1]_AXR[7]/ TIM3_IO/ GP0[15]	H2	I/O	IPD DVDD	MCA[1], TIMER3, GP0 PINCNTL44 DSIS: PIN	McASP2 Transmit/Receive Data I/Os
MCA[2]_AXR[2]/ MCA[1]_AXR[6]/ TIM2_IO/ GP0[14]	V5	I/O	IPD DVDD	MCA[1], TIMER2, GP0 PINCNTL43 DSIS: PIN	
MCA[2]_AXR[1]/ SD0_DAT[7]/ UART5_TXD/ GP0[13]	V6	I/O	IPU DVDD	SD0, UART5, GP0 PINCNTL42 DSIS: PIN	
MCA[2]_AXR[0]/ SD0_DAT[6]/ UART5_RXD/ GP0[12]	N2	I/O	IPU DVDD	SD0, UART5, GP0 PINCNTL41 DSIS: PIN	

(1) I = Input, O = Output, Z = High impedance, S = Supply voltage, GND = Ground, A = Analog signal, MM = Multi Muxed, DSIS = De-selected Input State
(2) IPD = Internal Pulldown Active, IPU = Internal Pullup Active, DIS = Internal Pull Disabled. This represents the default state of the Internal Pull during and after Reset. For more detailed information on pullup/pulldown resistors and situations where external pullup/pulldown resistors are required, see Section 4.5.1, *Pullup/Pulldown Resistors* and Section 7.3.17,*Pin Behaviors at Reset*.
(3) Specifies the operating I/O supply voltage for each signal

Copyright © 2011–2013, Texas Instruments Incorporated

Table 3-20. McASP3 Terminal Functions

SIGNAL NAME	NO.	TYPE(1)	OTHER(2) (3)	MUXED	DESCRIPTION
McASP3					
MCA[3]_ACLKX/ GP0[16]	G6	I/O	IPD DVDD	GP0 PINCNTL45 DSIS: 0	McASP3 Transmit Bit Clock I/O
AUD_CLKIN0/ MCA[0]_AXR[7]/ MCA[0]_AHCLKX/ **MCA[3]_AHCLKX**/ USB1_DRVVBUS	L5	I/O	IPD DVDD	AUD_CLKIN0, MCA[0], USB1 PINCNTL14 DSIS: PIN	McASP3 Transmit High-Frequency Master Clock I/O
MCA[3]_AFSX/ GP0[17]	H4	I/O	IPD DVDD	GP0 PINCNTL46 DSIS: 0	McASP3 Transmit Frame Sync I/O
MCA[3]_AXR[3]/ MCA[1]_AXR[9]/	J6	I/O	IPD DVDD	MCA[1] PINCNTL50 DSIS: PIN	McASP3 Transmit/Receive Data I/Os
MCA[3]_AXR[2]/ MCA[1]_AXR[8]/ GP0[20]	F2	I/O	IPD DVDD	MCA[1], GP0 PINCNTL49 DSIS: PIN	
MCA[3]_AXR[1]/ TIM5_IO/ GP0[19]	G2	I/O	IPD DVDD	TIMER5, GP0 PINCNTL48 DSIS: PIN	
MCA[3]_AXR[0]/ TIM4_IO/ GP0[18]	G1	I/O	IPD DVDD	TIMER4, GP0 PINCNTL47 DSIS: PIN	

(1) I = Input, O = Output, Z = High impedance, S = Supply voltage, GND = Ground, A = Analog signal, MM = Multi Muxed, DSIS = De-selected Input State
(2) IPD = Internal Pulldown Active, IPU = Internal Pullup Active, DIS = Internal Pull Disabled. This represents the default state of the Internal Pull before after Reset. For more detailed information on pullup/pulldown resistors and situations where external pullup/pulldown resistors are required, see Section 4.5.1, *Pullup/Pulldown Resistors* and Section 7.3.17, *Pin Behaviors at Reset*.
(3) Specifies the operating I/O supply voltage for each signal

Copyright © 2011–2013, Texas Instruments Incorporated

Table 3-21. McASP4 Terminal Functions

SIGNAL NAME	NO.	TYPE(1)	OTHER(2) (3)	MUXED	DESCRIPTION
McASP4					
MCA[4]_ACLKX/ GP0[21]	K7	I/O	IPD DVDD	GP0 PINCNTL51 DSIS: 0	McASP4 Transmit Bit Clock I/O
AUD_CLKIN1/ MCA[0]_AXR[8]/ MCA[1]_AHCLKX/ **MCA[4]_AHCLKX**/ EDMA_EVT3/ TIM2_IO/ GP0[8]	R5	I/O	IPD DVDD	AUD_CLKIN1, MCA[0], MCA[1], EDMA, TIMER2, GP0 PINCNTL15 DSIS: PIN	McASP4 Transmit High-Frequency Master Clock I/O
MCA[4]_AFSX/ GP0[22]	H3	I/O	IPD DVDD	GP0 PINCNTL52 DSIS: 0	McASP4 Transmit Frame Sync I/O
MCA[5]_AXR[1]/ **MCA[4]_AXR[3]**/ TIM7_IO/ GP0[28]	L6	I/O	IPD DVDD	MCA[5], TIMER7, GP0 PINCNTL58 DSIS: PIN	McASP4 Transmit/Receive Data I/Os
MCA[5]_AXR[0]/ **MCA[4]_AXR[2]**/ GP0[27]	L7	I/O	IPD DVDD	MCA[5], GP0 PINCNTL57 DSIS: PIN	
MCA[4]_AXR[1]/ TIM6_IO/ GP0[24]	J4	I/O	IPD DVDD	TIMER6, GP0 PINCNTL54 DSIS: PIN	
MCA[4]_AXR[0]/ GP0[23]	H6	I/O	IPD DVDD	GP0 PINCNTL53 DSIS: PIN	

(1) I = Input, O = Output, Z = High impedance, S = Supply voltage, GND = Ground, A = Analog signal
(2) IPD = Internal Pulldown Active, IPU = Internal Pullup Active, DIS = Internal Pull Disabled. This represents the default state of the Internal Pull during and after Reset. For more detailed information on pullup/pulldown resistors and situations where external pullup/pulldown resistors are required, see Section 4.5.1, *Pullup/Pulldown Resistors* and Section 7.3.17, *Pin Behaviors at Reset*.
(3) Specifies the operating I/O supply voltage for each signal

Copyright © 2011–2013, Texas Instruments Incorporated

Table 3-22. McASP5 Terminal Functions

SIGNAL NAME	NO.	TYPE(1)	OTHER(2) (3)	MUXED	DESCRIPTION
McASP5					
MCA[5]_ACLKX/ GP0[25]	J3	I/O	IPD DVDD	GP0 PINCNTL55 DSIS: 0	McASP5 Transmit Bit Clock I/O
AUD_CLKIN2/ MCA[0]_AXR[9]/ MCA[2]_AHCLKX/ **MCA[5]_AHCLKX**/ EDMA_EVT2/ TIM3_IO/ GP0[9]	H1	I/O	IPD DVDD	AUD_CLKIN2, MCA[0], MCA[2], EDMA, TIMER3, GP0 PINCNTL16 DSIS: PIN	McASP5 Transmit High-Frequency Master Clock I/O
MCA[5]_AFSX/ GP0[26]	H5	I/O	IPD DVDD	GP0 PINCNTL56 DSIS: 0	McASP5 Transmit Frame Sync I/O
MCA[0]_AFSR/ **MCA[5]_AXR[3]**	K1	I/O	IPD DVDD	MCA[0] PINCNTL20 DSIS: PIN	McASP5 Transmit/Receive Data I/Os
MCA[0]_ACLKR/ **MCA[5]_AXR[2]**	K2	I/O	IPD DVDD	MCA[0] PINCNTL19 DSIS: PIN	
MCA[5]_AXR[1]/ MCA[4]_AXR[3]/ TIM7_IO/ GP0[28]	L6	I/O	IPD DVDD	MCA[4], TIMER7, GP0 PINCNTL58 DSIS: PIN	
MCA[5]_AXR[0]/ MCA[4]_AXR[2]/ GP0[27]	L7	I/O	IPD DVDD	MCA[4], GP0 PINCNTL57 DSIS: PIN	

(1) I = Input, O = Output, Z = High impedance, S = Supply voltage, GND = Ground, A = Analog signal, MM = Multi Muxed, DSIS = De-selected Input State
(2) IPD = Internal Pulldown Active, IPU = Internal Pullup Active, DIS = Internal Pull Disabled. This represents the default state of the Internal Pull during and after Reset. For more detailed information on pullup/pulldown resistors and situations where external pullup/pulldown resistors are required, see Section 4.5.1, *Pullup/Pulldown Resistors* and Section 7.3.17, *Pin Behaviors at Reset*.
(3) Specifies the operating I/O supply voltage for each signal

3.2.12 McBSP

Table 3-23. McBSP Terminal Functions

SIGNAL NAME	NO.	TYPE(1)	OTHER(2) (3)	MUXED	DESCRIPTION
McBSP					
MCA[0]_AXR[9]/ MCB_CLKX/ **MCB_CLKR**	M6	I/O	IPD DVDD	MCA[0], MCB PINCNTL30 DSIS: PIN MM: MUX1	McBSP Receive Clock I/O
MCA[1]_AXR[3]/ **MCB_CLKR**	N6	I/O	IPD DVDD	MCA[1] PINCNTL38 DSIS: PIN MM: MUX0	
MCA[0]_AXR[8]/ MCB_FSX/ **MCB_FSR**	L1	I/O	IPD DVDD	MCA[0], MCB PINCNTL29 DSIS: PIN MM: MUX1	McBSP Receive Frame Sync I/O
MCA[1]_AXR[2]/ **MCB_FSR**	R3	I/O	IPD DVDD	MCA[1], MCB PINCNTL37 DSIS: PIN MM: MUX0	
MCA[0]_AXR[6]/ **MCB_DR**	M4	I/O	IPD DVDD	MCA[0] PINCNTL27 DSIS: PIN	McBSP Receive Data Input
MCA[0]_AXR[9]/ **MCB_CLKX**/ MCB_CLKR	M6	I/O	IPD DVDD	MCA[0], MCB PINCNTL30 DSIS: PIN	McBSP Transmit Clock I/O
MCA[0]_AXR[8]/ **MCB_FSX**/ MCB_FSR	L1	I/O	IPD DVDD	MCA[0], MCB PINCNTL29 DSIS: PIN	McBSP Transmit Frame Sync I/O
MCA[0]_AXR[7]/ **MCB_DX**	L2	I/O	IPD DVDD	MCA[0] PINCNTL28 DSIS: PIN	McBSP Transmit Data Output

(1) I = Input, O = Output, Z = High impedance, S = Supply voltage, GND = Ground, A = Analog signal, MM = Multi Muxed, DSIS = De-selected Input State
(2) IPD = Internal Pulldown Active, IPU = Internal Pullup Active, DIS = Internal Pull Disabled. This represents the default state of the Internal Pull during and after Reset. For more detailed information on pullup/pulldown resistors and situations where external pullup/pulldown resistors are required, see Section 4.5.1, *Pullup/Pulldown Resistors* and Section 7.3.17, *Pin Behaviors at Reset*.
(3) Specifies the operating I/O supply voltage for each signal

Copyright © 2011–2013, Texas Instruments Incorporated

3.2.13 PCI Express (PCIe)

Table 3-24. PCI Express (PCIe) Terminal Functions

SIGNAL NAME	SIGNAL NO.	TYPE(1)	OTHER(2) (3)	DESCRIPTION
PCIE_TXP0	AD2	O	– VDDA_PCIE_1P8	PCIE Transmit Data Lane 0. When the PCIe SERDES are powered down, these pins should be left unconnected.
PCIE_TXN0	AD1	O		
PCIE_RXP0	AC2	I	– VDDA_PCIE_1P8	PCIE Receive Data Lane 0. When the PCIe SERDES are powered down, these pins should be left unconnected.
PCIE_RXN0	AC1	I		
SERDES_CLKP	AF1	I	– SERDES_CLK LDO (internal)	PCIE Serdes Reference Clock Inputs and *optional* SATA Reference Clock Inputs. Shared between PCI Express and Serial ATA. When PCI Express is not used, and these pins are not used as *optional* SATA Reference Clock Inputs, these pins can be left unconnected.
SERDES_CLKN	AF2	I	– SERDES_CLK LDO (internal)	

(1) I = Input, O = Output, Z = High impedance, S = Supply voltage, GND = Ground, A = Analog signal, MM = Multi Muxed, DSIS = De-selected Input State
(2) IPD = Internal Pulldown Active, IPU = Internal Pullup Active, DIS = Internal Pull Disabled. This represents the default state of the Internal Pull after Reset. For more detailed information on pullup/pulldown resistors and situations where external pullup/pulldown resistors are required, see Section 4.5.1, *Pullup/Pulldown Resistors* and Section 7.3.17, *Pin Behaviors at Reset*.
(3) Specifies the operating I/O supply voltage for each signal

3.2.14 Reset, Interrupts, and JTAG Interface

Table 3-25. RESET, Interrupts, and JTAG Terminal Functions

SIGNAL NAME	SIGNAL NO.	TYPE(1)	OTHER(2) (3)	MUXED	DESCRIPTION
RESET					
$\overline{\text{RESET}}$	J5	I	IPU DVDD	– PINCNTL260	Device Reset input
$\overline{\text{POR}}$	F1	I	– DVDD	–	Power-On Reset input
$\overline{\text{RSTOUT_WD_OUT}}$	K6	O	DIS DVDD	– PINCNTL262	Reset output (RSTOUT) or watchdog out (WD_OUT) For more detailed information on $\overline{\text{RSTOUT_WD_OUT}}$ pin behavior, see Section 7.3.14, *$\overline{\text{RSTOUT_WD_OUT}}$ Pin*.
INTERRUPTS					
$\overline{\text{NMI}}$	H7	I	IPU DVDD	– PINCNTL261	Non-Maskable Interrupt input
GP0[31:0]	see Table 3-10	I/O	see **NOTE**	see Table 3-10	Interrupt-capable general-purpose I/Os. **NOTE:** All pins are multiplexed with other pin functions. See Table 3-10, GP0 Terminal Functions table for muxing and internal pullup/pulldown/disable details.
GP1[31:0]	see Table 3-11	I/O	see **NOTE**	see Table 3-11	Interrupt-capable general-purpose I/Os. **NOTE:** All pins are multiplexed with other pin functions. See Table 3-11, GP1 Terminal Functions table for muxing and internal pullup/pulldown/disable details.
GP2[31:0]	see Table 3-12	I/O	see **NOTE**	see Table 3-12	Interrupt-capable general-purpose I/Os. **NOTE:** All pins are multiplexed with other pin functions. See Table 3-12, GP2 Terminal Functions table for muxing and internal pullup/pulldown/disable details.
GP3[31:0]	see Table 3-13	I/O	see **NOTE**	see Table 3-13	Interrupt-capable general-purpose I/Os. **NOTE:** All pins are multiplexed with other pin functions. See Table 3-13, GP3 Terminal Functions table for muxing and internal pullup/pulldown/disable details.
JTAG					
TCLK	W7	I	IPU DVDD	–	JTAG test clock input
RTCK	AD4	O	IPU/DIS DVDD	–	JTAG return clock output The internal pullup (IPU) is enabled for this pin when the device is in reset and the IPU is disabled (DIS) when reset is released.
TDI	Y7	I	IPU DVDD	–	JTAG test data input
TDO	AC5	O	IPU DVDD	–	JTAG test port data output
TMS	AA7	I	IPU DVDD	–	JTAG test port mode select input. For proper operation, ***do not*** oppose the IPU on this pin.
$\overline{\text{TRST}}$	AA4	I	IPD DVDD	–	JTAG test port reset input
VOUT[0]_R_CR[2]/ **EMU4**/ GP2[26]	AD9	I/O	IPD DVDD	VOUT[0], GP2 PINCNTL196 DSIS: PIN	Emulator pin 4
VOUT[0]_G_Y_YC[2]/ **EMU3**/ GP2[24]	AH7	I/O	IPD DVDD	VOUT[0], GP2 PINCNTL188 DSIS: PIN	Emulator pin 3

(1) I = Input, O = Output, Z = High impedance, S = Supply voltage, GND = Ground, A = Analog signal, MM = Multi Muxed, DSIS = De-selected Input State
(2) IPD = Internal Pulldown Active, IPU = Internal Pullup Active, DIS = Internal Pull Disabled. This represents the default state of the Internal Pull during and after Reset. For more detailed information on pullup/pulldown resistors and situations where external pullup/pulldown resistors are required, see Section 4.5.1, *Pullup/Pulldown Resistors* and Section 7.3.17, *Pin Behaviors at Reset*.
(3) Specifies the operating I/O supply voltage for each signal

Copyright © 2011–2013, Texas Instruments Incorporated

Table 3-25. RESET, Interrupts, and JTAG Terminal Functions (continued)

SIGNAL NAME	SIGNAL NO.	TYPE[1]	OTHER[2] [3]	MUXED	DESCRIPTION
VOUT[0]_B_CB_C[2]/ **EMU2**/ GP2[22]	AG7	I/O	IPD DVDD	VOUT[0], GP0 PINCNTL180 DSIS: PIN	Emulator pin 2
EMU1	AE11	I/O	IPU DVDD	–	Emulator pin 1
EMU0	AG8	I/O	IPU DVDD	–	Emulator pin 0

3.2.15 Serial ATA (SATA) Signals

Table 3-26. Serial ATA (SATA) Terminal Functions

SIGNAL NAME	NO.	TYPE(1)	OTHER(2) (3)	MUXED	DESCRIPTION
SATA_TXN0	AB1	O	– VDDA_SATA_1P8	–	Serial ATA Data Transmit. When the SATA SERDES are powered down, these pins should be left unconnected.
SATA_TXP0	AB2	O	– VDDA_SATA_1P8	–	
SATA_RXN0	AA2	I	– VDDA_SATA_1P8	–	Serial ATA Data Receive. When the SATA SERDES are powered down, these pins should be left unconnected.
SATA_RXP0	AA1	I	– VDDA_SATA_1P8	–	
SPI[0]_SCS[1]/ SD1_SDCD/ **SATA_ACT0_LED**/ EDMA_EVT1/ TIM4_IO/ GP1[6]	AE5	O	IPU DVDD	SPI[0], SD1, EDMA, TIMER 4, GP1 PINCNTL80 DSIS: N/A	Serial ATA disk 0 Activity LED output
SERDES_CLKP	AF1	I	– SERDES_CLK LDO (internal)	–	PCIE Serdes Reference Clock Inputs and *optional* SATA Reference Clock Inputs. Shared between PCI Express and Serial ATA. When PCI Express is not used, and these pins are not used as *optional* SATA Reference Clock Inputs, these pins should be left unconnected.
SERDES_CLKN	AF2	I	– SERDES_CLK LDO (internal)	–	

(1) I = Input, O = Output, Z = High impedance, S = Supply voltage, GND = Ground, A = Analog signal, MM = Multi Muxed, DSIS = De-selected Input State
(2) IPD = Internal Pulldown Active, IPU = Internal Pullup Active, DIS = Internal Pull Disabled. This represents the default state of the Internal Pull during and after Reset. For more detailed information on pullup/pulldown resistors and situations where external pullup/pulldown resistors are required, see Section 4.5.1, *Pullup/Pulldown Resistors* and Section 7.3.17, *Pin Behaviors at Reset*.
(3) Specifies the operating I/O supply voltage for each signal

Copyright © 2011–2013, Texas Instruments Incorporated

3.2.16 SD Signals (MMC/SD/SDIO)

Table 3-27. SD0 Terminal Functions

SIGNAL NAME	NO.	TYPE(1)	OTHER(2)(3)	MUXED	DESCRIPTION
SD0_CLK/ GP0[1]	Y6	O	IPU DVDD_SD	GP0 PINCNTL8 DSIS: 1	SD0 Clock output
SD0_CMD/ SD1_CMD/ GP0[2]	N1	I/O	IPU DVDD_SD	SD1, GP0 PINCNTL9 DSIS: 1	SD0 Command input/output
SD0_DAT[0]/ SD1_DAT[4]/ GP0[3]	R7	I/O	IPU DVDD_SD	SD1, GP0 PINCNTL10 DSIS: PIN	SD0 Data0 I/O. Functions as data bit 0 for 4-/8-bit SD mode and single data bit for 1-bit SD mode.
SD0_DAT[1]_$\overline{\text{SDIRQ}}$/ SD1_DAT[5]/ GP0[4]	Y5	I/O	IPU DVDD_SD	SD1, GP0 PINCNTL11 DSIS: PIN	SD0 Data1 I/O. Functions as data bit 1 for 4-/8-bit SD mode and as an IRQ input for 1-bit SD mode.
SD0_DAT[2]_SDR$\overline{\text{W}}$/ SD1_DAT[6]/ GP0[5]	Y3	I/O	IPU DVDD_SD	SD1, GP0 PINCNTL12 DSIS: PIN	SD0 Data2 I/O. Functions as data bit 2 for 4-/8-bit SD mode and as a Read Wait input for 1-bit SD mode.
SD0_DAT[3]/ SD1_DAT[7]/ GP0[6]	Y4	I/O	IPU DVDD_SD	SD1, GP0 PINCNTL13 DSIS: PIN	SD0 Data3 I/O. Functions as data bit 3 for 4-/8-bit SD mode.
MCA[1]_AXR[0]/ **SD0_DAT[4]**/	V4	I/O	IPU DVDD	MCA[1] PINCNTL35 DSIS: PIN	SD0 Data4 I/O. Functions as data bit 4 for 8-bit SD mode.
MCA[1]_AXR[1]/ **SD0_DAT[5]**/	T6	I/O	IPU DVDD	MCA[1], SC0 PINCNTL36 DSIS: PIN	SD0 Data5 I/O. Functions as data bit 5 for 8-bit SD mode.
MCA[2]_AXR[0]/ **SD0_DAT[6]**/ UART5_RXD/ GP0[12]	N2	I/O	IPU DVDD	MCA[2], UART5, GP0 PINCNTL41 DSIS: PIN	SD0 Data6 I/O. Functions as data bit 6 for 8-bit SD mode.
MCA[2]_AXR[1]/ **SD0_DAT[7]**/ UART5_TXD/ GP0[13]	V6	I/O	IPU DVDD	MCA[2], UART5, GP0 PINCNTL42 DSIS: PIN	SD0 Data7 I/O. Functions as data bit 7 for 8-bit SD mode.
$\overline{\text{UART0_CTS}}$/ UART4_RXD/ DCAN1_TX/ $\overline{\text{SPI[1]_SCS[3]}}$/ **SD0_SDCD**	AE6	I	IPD DVDD	UART0, UART4, DCAN1, SPI[1] PINCNTL72 DSIS: 1	SD0 Card Detect input

(1) I = Input, O = Output, Z = High impedance, S = Supply voltage, GND = Ground, A = Analog signal, MM = Multi Muxed, DSIS = De-selected Input State
(2) IPD = Internal Pulldown Active, IPU = Internal Pullup Active, DIS = Internal Pull Disabled. This represents the default state of the Internal Pull after Reset. For more detailed information on pullup/pulldown resistors and situations where external pullup/pulldown resistors are required, see Section 4.5.1, *Pullup/Pulldown Resistors* and Section 7.3.17, *Pin Behaviors at Reset*.
(3) Specifies the operating I/O supply voltage for each signal

Table 3-28. SD1 Terminal Functions

SIGNAL NAME	NO.	TYPE(1)	OTHER(2)(3)	MUXED	DESCRIPTION
SD1_CLK	P3	O	IPU DVDD_SD	– PINCNTL1 DSIS: N/A	SD1 Clock output
SD0_CMD/ **SD1_CMD**/ GP0[2]	N1	I/O	IPU DVDD_SD	SD0, GP0 PINCNTL9 DSIS: N/A MM: MUX1	SD1 Command input/output
SD1_CMD/ GP0[0]	P2	I/O	IPU DVDD_SD	GP1 PINCNTL2 DSIS: N/A MM: MUX0	
SD1_DAT[0]	P1	I/O	IPU DVDD_SD	– PINCNTL3	SD1 Data0 I/O. Functions as data bit 0 for 4-/8-bit SD mode and single data bit for 1-bit SD mode.
SD1_DAT[1]_$\overline{\text{SDIRQ}}$	P5	I/O	IPU DVDD_SD	– PINCNTL4	SD1 Data1 I/O. Functions as data bit 1 for 4-/8-bit SD mode and as an IRQ input for 1-bit SD mode.
SD1_DAT[2]_SDR$\overline{\text{W}}$	P4	I/O	IPU DVDD_SD	– PINCNTL5	SD1 Data2 I/O. Functions as data bit 2 for 4-/8-bit SD mode and as a Read Wait input for 1-bit SD mode.
SD1_DAT[3]	P6	I/O	IPU DVDD_SD	– PINCNTL6	SD1 Data3 I/O. Functions as data bit 3 for 4-/8-bit SD mode.
SD0_DAT[0]/ **SD1_DAT[4]**/ GP0[3]	R7	I/O	IPU DVDD_SD	SD0, GP0 PINCNTL10 DSIS: PIN	SD1 Data4 I/O. Functions as data bit 4 for 8-bit SD mode.
SD0_DAT[1]_$\overline{\text{SDIRQ}}$/ **SD1_DAT[5]**/ GP0[4]	Y5	I/O	IPU DVDD_SD	SD0, GP0 PINCNTL11 DSIS: PIN	SD1 Data5 I/O. Functions as data bit 5 for 8-bit SD mode.
SD0_DAT[2]_SDR$\overline{\text{W}}$/ **SD1_DAT[6]**/ GP0[5]	Y3	I/O	IPU DVDD_SD	SD0, GP0 PINCNTL12 DSIS: PIN	SD1 Data6 I/O. Functions as data bit 6 for 8-bit SD mode.
SD0_DAT[3]/ **SD1_DAT[7]**/ GP0[6]	Y4	I/O	IPU DVDD_SD	SD0, GP0 PINCNTL13 DSIS: PIN	SD1 Data7 I/O. Functions as data bit 7 for 8-bit SD mode.
$\overline{\text{UART0_DCD}}$/ $\overline{\text{UART3_RXD}}$/ $\overline{\text{SPI[0]_SCS[3]}}$/ I2C[2]_SCL/ **SD1_POW**/ GP1[2]	AH4	O	IPU DVDD	UART0, UART3, SPI[0], I2C[2], GP1 PINCNTL74 DSIS: PIN	SD1 Card Power Enable output
$\overline{\text{SPI[0]_SCS[1]}}$/ **SD1_SDCD**/ SATA_ACT0_LED/ EDMA_EVT1/ TIM4_IO/ GP1[6]	AE5	I	IPU DVDD	SPI[0], SATA, EDMA, TIM4, GP1 PINCNTL80 DSIS: 1	SD1 Card Detect input
$\overline{\text{UART0_DSR}}$/ $\overline{\text{UART3_TXD}}$/ $\overline{\text{SPI[0]_SCS[2]}}$/ I2C[2]_SDA/ **SD1_SDWP**/ GP1[3]	AG4	I	IPU DVDD	UART0, UART3, SPI[0], I2C[2], GP1 PINCNTL75 DSIS: 0	SD1 Card Write Protect input

(1) I = Input, O = Output, Z = High impedance, S = Supply voltage, GND = Ground, A = Analog signal, MM = Multi Muxed, DSIS = De-selected Input State
(2) IPD = Internal Pulldown Active, IPU = Internal Pullup Active, DIS = Internal Pull Disabled. This represents the default state of the Internal Pull after Reset. For more detailed information on pullup/pulldown resistors and situations where external pullup/pulldown resistors are required, see Section 4.5.1, *Pullup/Pulldown Resistors* and Section 7.3.17, *Pin Behaviors at Reset*.
(3) Specifies the operating I/O supply voltage for each signal

Copyright © 2011–2013, Texas Instruments Incorporated

Table 3-29. SD2 Terminal Functions

SIGNAL NAME	NO.	TYPE(1)	OTHER(2) (3)	MUXED	DESCRIPTION
SD2_SCLK/ GP1[15]	M23	O	IPU DVDD_GPMC	GP1 PINCNTL121 DSIS: N/A	SD2 Clock output
$\overline{\text{GPMC_CS[4]}}$/ **SD2_CMD**/ GP1[8]	P25	I/O	IPU DVDD_GPMC	GPMC, GP1 PINCNTL126 DSIS: N/A	SD2 Command input/output
SD2_DAT[0]/ GPMC_A[4]/ GP1[14]	L26	I/O	IPU DVDD_GPMC	GPMC, GP1 PINCNTL120 DSIS: PIN	SD2 Data0 I/O. Functions as data bit 0 for 4-/8-bit SD mode and single data bit for 1-bit SD mode.
SD2_DAT[1]_$\overline{\text{SDIRQ}}$/ GPMC_A[3]/ GP1[13]	M24	I/O	IPU DVDD_GPMC	GMPC, GP1 PINCNTL119 DSIS: PIN	SD2 Data1 I/O. Functions as data bit 1 for 4-/8-bit SD mode and as an IRQ input for 1-bit SD mode
SD2_DAT[2]_SDR$\overline{\text{W}}$/ GPMC_A[2]/ GP2[6]	K27	I/O	IPU DVDD_GPMC	GPMC, GP2 PINCNTL118 DSIS: PIN	SD2 Data2 I/O. Functions as data bit 2 for 4-/8-bit SD mode and as a Read Wait input for 1-bit SD mode.
SD2_DAT[3]/ GPMC_A[1]/ GP2[5]	J28	I/O	IPU DVDD_GPMC	GPMC, GP2 PINCNTL117 DSIS: PIN	SD2 Data3 I/O. Functions as data bit 3 for 4-/8-bit SD mode.
SD2_DAT[4]/ GPMC_A[27]/ GPMC_A[23]/ $\overline{\text{GPMC_CS[7]}}$/ EDMA_EVT0/ TIM7_IO/ GP1[22]	R24	I/O	IPU DVDD_GPMC	GPMC, EDMA, TIM7, GP1 PINCNTL116 DSIS: PIN	SD2 Data4 I/O. Functions as data bit 4 for 8-bit SD mode.
SD2_DAT[5]/ GPMC_A[26]/ GPMC_A[22]/ TIM6_IO/ GP1[21]	P22	I/O	IPU DVDD_GPMC	GPMC, TIM6, GP1 PINCNTL115 DSIS: PIN	SD2 Data5 I/O. Functions as data bit 5 for 8-bit SD mode.
SD2_DAT[6]/ GPMC_A[25]/ GPMC_A[21]/ UART2_TXD/ GP1[20]	N23	I/O	IPU DVDD_GPMC	GPMC, UART2, GP1 PINCNTL114 DSIS: PIN	SD2 Data6 I/O. Functions as data bit 6 for 8-bit SD mode.
SD2_DAT[7]/ GPMC_A[24]/ GPMC_A[20]/ UART2_RXD/ GP1[19]	L25	I/O	IPU DVDD_GPMC	GPMC, UART2, GP1 PINCNTL113 DSIS: PIN	SD2 Data7 I/O. Functions as data bit 7 for 8-bit SD mode.
$\overline{\text{UART0_RTS}}$/ UART4_TXD/ DCAN1_RX/ SPI[1]_SCS[2]/ **SD2_SDCD**	AF5	I	IPD DVDD	UART0, UART4, DCAN1, SPI[1] PINCNTL73 DSIS: 1	SD2 Card Detect input.

(1) I = Input, O = Output, Z = High impedance, S = Supply voltage, GND = Ground, A = Analog signal, MM = Multi Muxed, DSIS = De-selected Input State
(2) IPD = Internal Pulldown Active, IPU = Internal Pullup Active, DIS = Internal Pull Disabled. This represents the default state of the Internal Pull during and after Reset. For more detailed information on pullup/pulldown resistors and situations where external pullup/pulldown resistors are required, see Section 4.5.1, *Pullup/Pulldown Resistors* and Section 7.3.17, *Pin Behaviors at Reset*.
(3) Specifies the operating I/O supply voltage for each signal

3.2.17 SPI

Table 3-30. SPI 0 Terminal Functions

SIGNAL NAME	NO.	TYPE(1)	OTHER(2)(3)	MUXED	DESCRIPTION
SPI[0]_SCLK	AC7	I/O	IPU DVDD	– PINCNTL82	SPI Clock I/O
UART0_DCD/ UART3_RXD/ **SPI[0]_SCS[3]**/ I2C[2]_SCL/ SD1_POW/ GP1[2]	AH4	I/O	IPU DVDD	UART0, UART3, I2C[2], SD1, GP1 PINCNTL74 DSIS: PIN	SPI Chip Select I/O
UART0_DSR/ UART3_TXD/ **SPI[0]_SCS[2]**/ I2C[2]_SDA/ SD1_SDWP/ GP1[3]	AG4	I/O	IPU DVDD	UART0, UART3, I2C[2], SD1, GP1 PINCNTL75 DSIS: PIN	
SPI[0]_SCS[1]/ SD1_SDCD/ SATA_ACT0_LED/ EDMA_EVT1/ TIM4_IO/ GP1[6]	AE5	I/O	IPU DVDD	SD1, SATA, EDMA, TIMER4, GP1 PINCNTL80 DSIS: PIN	
SPI[0]_SCS[0]	AD6	I/O	IPU DVDD	– PINCNTL81	
SPI[0]_D[1]	AF3	I/O	IPU DVDD	– PINCNTL83	SPI Data I/O. Can be configured as either MISO or MOSI
SPI[0]_D[0]	AE3	I/O	IPU DVDD	– PINCNTL84	

(1) I = Input, O = Output, Z = High impedance, S = Supply voltage, GND = Ground, A = Analog signal, MM = Multi Muxed, DSIS = De-selected Input State
(2) IPD = Internal Pulldown Active, IPU = Internal Pullup Active, DIS = Internal Pull Disabled. This represents the default state of the Internal Pull during and after Reset. For more detailed information on pullup/pulldown resistors and situations where external pullup/pulldown resistors are required, see Section 4.5.1, *Pullup/Pulldown Resistors* and Section 7.3.17, *Pin Behaviors at Reset*.
(3) Specifies the operating I/O supply voltage for each signal

Copyright © 2011–2013, Texas Instruments Incorporated

Table 3-31. SPI 1 Terminal Functions

SIGNAL NAME	NO.	TYPE(1)	OTHER(2)(3)	MUXED	DESCRIPTION
SPI[1]_SCLK/ GP1[17]	AC3	I/O	IPU DVDD	GP1 PINCNTL86 DSIS: PIN	SPI Clock I/O
UART0_CTS/ UART4_RXD/ DCAN1_TX/ **SPI[1]_SCS[3]**/ SD0_SDCD	AE6	I/O	IPU DVDD	UART0, UART4, DCAN1, SD0 PINCNTL72 DSIS: PIN	SPI Chip Select I/O
UART0_RTS/ UART4_TXD/ DCAN1_RX/ **SPI[1]_SCS[2]**/ SD2_SDCD	AF5	I/O	IPU DVDD	UART0, UART4, DCAN1, SD2 PINCNTL73 DSIS: PIN	
DEVOSC_WAKE/ **SPI[1]_SCS[1]**/ TIM5_IO/ GP1[7]	W6	I/O	IPU DVDD_SD	DEVOSC, TIMER5, GP1 PINCNTL7 DSIS: PIN	
SPI[1]_SCS[0]/ GP1[16]	AD3	I/O	IPU DVDD	GP1 PINCNTL85 DSIS: PIN	
SPI[1]_D[1]/ GP1[18]	AA3	I/O	IPU DVDD	GP1 PINCNTL87 DSIS: PIN	SPI Data I/O. Can be configured as either MISO or MOSI
SPI[1]_D[0]/ GP1[26]	AA6	I/O	IPU DVDD	GP1 PINCNTL88 DSIS: PIN	

(1) I = Input, O = Output, Z = High impedance, S = Supply voltage, GND = Ground, A = Analog signal, MM = Multi Muxed, DSIS = De-selected Input State
(2) IPD = Internal Pulldown Active, IPU = Internal Pullup Active, DIS = Internal Pull Disabled. This represents the default state of the Internal Pull during and after Reset. For more detailed information on pullup/pulldown resistors and situations where external pullup/pulldown resistors are required, see Section 4.5.1, *Pullup/Pulldown Resistors* and Section 7.3.17, *Pin Behaviors at Reset*.
(3) Specifies the operating I/O supply voltage for each signal

Table 3-32. SPI 2 Terminal Functions

SIGNAL NAME	NO.	TYPE(1)	OTHER(2) (3)	MUXED	DESCRIPTION
EMAC[0]_MRXDV/ EMAC[1]_RGRXD[1]/ GPMC_A[5]/ **SPI[2]_SCLK**	K22	I/O	IPD DVDD_GPMC	EMAC[0], EMAC[1], GPMC PINCNTL248 DSIS: 1 MM: MUX2	SPI Clock I/O
VOUT[1]_R_CR[3]/ GPMC_A[14]/ VIN[1]A_D[22]/ HDMI_SDA/ **SPI[2]_SCLK**/ I2C[2]_SDA/ GP3[21]	AG28	I/O	IPU DVDD	VOUT[1], GPMC, VIN[1]A, HDMI, I2C[2], GP3 PINCNTL229 DSIS: 1 MM: MUX1	
GPMC_A[23]/ **SPI[2]_SCLK**/ HDMI_HPDET/ TIM5_IO/ GP1[18]	AA26	I/O	IPD DVDD_GPMC	GPMC, HDMI, TIMER5, GP1 PINCNTL112 DSIS: 1 MM: MUX0	
EMAC[0]_MRXD[7]/ EMAC[0]_RGTXD[1]/ GPMC_A[4]/ **SPI[2]_SCS[3]**/	G27	I/O	IPD DVDD_GPMC	EMAC[0], GPMC PINCNTL247 DSIS: 1	SPI Chip Select I/O
VOUT[1]_G_Y_YC[2]/ GPMC_A[13]/ VIN[1]A_D[21]/ HDMI_SCL/ **SPI[2]_SCS[2]**/ I2C[2]_SCL/ GP3[20]	AF27	I/O	IPU DVDD	VOUT[1]. VIN[1]A, HDMI, I2C[2], GP3 PINCNTL228 DSIS: 1	
GPMC_A[20]/ **SPI[2]_SCS[1]**/ GP1[15]	AD28	I/O	IPU DVDD_GPMC	GPMC, GP1 PINCNTL109 DSIS: 1	
GPMC_CS[3]/ VIN[1]B_CLK/ **SPI[2]_SCS[0]**/ GP1[26]	P26	I/O	IPU DVDD_GPMC	GPMC, VIN[1]B, GP1 PINCNTL125 DSIS: 1	

(1) I = Input, O = Output, Z = High impedance, S = Supply voltage, GND = Ground, A = Analog signal, MM = Multi Muxed, DSIS = De-selected Input State
(2) IPD = Internal Pulldown Active, IPU = Internal Pullup Active, DIS = Internal Pull Disabled. This represents the default state of the Internal Pull during and after Reset. For more detailed information on pullup/pulldown resistors and situations where external pullup/pulldown resistors are required, see Section 4.5.1, *Pullup/Pulldown Resistors* and Section 7.3.17, *Pin Behaviors at Reset*.
(3) Specifies the operating I/O supply voltage for each signal

Copyright © 2011–2013, Texas Instruments Incorporated

Table 3-32. SPI 2 Terminal Functions (continued)

SIGNAL NAME	NO.	TYPE(1)	OTHER(2) (3)	MUXED	DESCRIPTION
EMAC[0]_GMTCLK/ EMAC[1]_RGRXC/ GPMC_A[6]/ **SPI[2]_D[1]**	K23	I/O	IPD DVDD_GPMC	EMAC[0], EMAC[1], GPMC PINCNTL249 DSIS: PIN MM: MUX2	SPI Data I/O. Can be configured as either MISO or MOSI
VOUT[1]_R_CR[2]/ GPMC_A[15]/ VIN[1]A_D[23]/ HDMI_HPDET/ **SPI[2]_D[1]**/ GP3[22]	AE27	I/O	IPD DVDD	VOUT[1], GPMC, VIN[1]A, HDMI, GP3 PINCNTL230 DSIS: PIN MM: MUX1	
GPMC_A[22]/ **SPI[2]_D[1]**/ HDMI_CEC/ TIM4_IO/ GP1[17]	AB27	I/O	IPU DVDD_GPMC	GPMC, HDMI, TIMER 4, GP1 PINCNTL111 DSIS: PIN MM: MUX0	
EMAC[0]_MTXD[0]/ EMAC[1]_RGRXD[3]/ GPMC_A[7]/ **SPI[2]_D[0]**	J24	I/O	IPD DVDD_GPMC	EMAC[0], EMAC[1], GPMC PINCNTL250 DSIS: PIN MM: MUX2	
VOUT[1]_B_CB_C[2]/ GPMC_A[0]/ VIN[1]A_D[7]/ HDMI_CEC/ **SPI[2]_D[0]**/ GP3[30]	AF28	I/O	IPU DVDD	VOUT[1], GPMC, VIN[1]A, HDMI, GP3 PINCNTL231 DSIS: PIN MM: MUX1	
GPMC_A[21]/ **SPI[2]_D[0]**/ GP1[16]	AC28	I/O	IPD DVDD_GPMC	GPMC, GP1 PINCNTL110 DSIS: PIN MM: MUX0	

Copyright © 2011–2013, Texas Instruments Incorporated

Table 3-33. SPI 3 Terminal Functions

SIGNAL NAME	NO.	TYPE(1)	OTHER(2) (3)	MUXED	DESCRIPTION
VOUT[0]_AVID/ VOUT[0]_FLD/ **SPI[3]_SCLK**/ TIM7_IO/ GP2[21]	AA10	I/O	IPD DVDD	VOUT[0], TIMER 7, GP2 PINCNTL179 DSIS: 1 MM: MUX2	SPI Clock I/O
VOUT[1]_R_CR[5]/ EMAC[1]_MTXD[4]/ VIN[1]A_D[16]/ **SPI[3]_SCLK**/ GP3[15]	AC26	I/O	IPD DVDD	VOUT[0], EMAC[1], VIN[1]A, GP3 PINCNTL223 DSIS: 1 MM: MUX1	
VIN[0]A_D[21]/ CAM_D[13]/ EMAC[1]_RMTXD[0]/ **SPI[3]_SCLK**/ GP0[15]	AE18	I/O	IPD DVDD_C	VIN[0]A, CAMERA_I/F, EMAC[1], GP0 PINCNTL161 DSIS: 1 MM: MUX0	
EMAC[0]_MTCLK/ EMAC[0]_RGRXC/ VIN[1]B_D[0]/ **SPI[3]_SCS[3]**/ I2C[2]_SDA/ GP3[23]	L24	I/O	IPD DVDD	EMAC[0], VIN[1]B, I2C[2], GP3 PINCNTL235 DSIS: 1	SPI Chip Select I/O
EMAC[0]_MRCLK/ EMAC[0]_RGTXC/ VIN[1]B_D[4]/ EMAC[0]_RMCRSDV/ **SPI[3]_SCS[2]**/ GP3[27]	H27	I/O	IPD DVDD_GPMC	EMAC[0], VIN[1]B, GP3 PINCNTL239 DSIS: 1	
VOUT[1]_R_CR[4]/ EMAC[1]_MTXD[3]/ VIN[1]A_D[15]/ **SPI[3]_SCS[1]**/ GP3[14]	AG27	I/O	IPD DVDD	VOUT[1]. EMAC[1], VIN[1]A, GP3 PINCNTL222 DSIS: 1	
VIN[0]A_D[20]/ CAM_D[12]/ EMAC[1]_RMCRSDV/ **SPI[3]_SCS[0]**/ GP0[14]	AC17	I/O	IPD DVDD_C	VIN[0]A, CAMERA,_I/F, EMAC[1]_RM, GP0 PINCNTL160 DSIS: 1	

(1) I = Input, O = Output, Z = High impedance, S = Supply voltage, GND = Ground, A = Analog signal, MM = Multi Muxed, DSIS = De-selected Input State
(2) IPD = Internal Pulldown Active, IPU = Internal Pullup Active, DIS = Internal Pull Disabled. This represents the default state of the Internal Pull during and after Reset. For more detailed information on pullup/pulldown resistors and situations where external pullup/pulldown resistors are required, see Section 4.5.1, *Pullup/Pulldown Resistors* and Section 7.3.17, *Pin Behaviors at Reset*.
(3) Specifies the operating I/O supply voltage for each signal

Copyright © 2011–2013, Texas Instruments Incorporated

Table 3-33. SPI 3 Terminal Functions (continued)

SIGNAL NAME	NO.	TYPE(1)	OTHER(2) (3)	MUXED	DESCRIPTION
VOUT[1]_HSYNC/ EMAC[1]_MCOL/ VIN[1]A_VSYNC/ **SPI[3]_D[1]/** UART3_RTS/ GP2[29]	AC24	I/O	IPD DVDD	VOUT[1], EMAC[1], VIN[1]A, UART3, GP2 PINCNTL205 DSIS: PIN MM: MUX2	SPI Data I/O. Can be configured as either MISO or MOSI
VOUT[1]_R_CR[6]/ EMAC[1]_MTXD[5]/ VIN[1]A_D[17]/ **SPI[3]_D[1]/** GP3[16]	AA25	I/O	IPD DVDD	VOUT[1], EMAC[1], VIN[1]A, GP3 PINCNTL224 DSIS: PIN MM: MUX1	
VIN[0]A_D[22]/ CAM_D[14]/ EMAC[1]_RMTXD[1]/ **SPI[3]_D[1]/** GP0[16]	AC21	I/O	IPD DVDD_C	VIN[0]A, CAMERA_I/F, EMAC[1]_RM, GP0 PINCNTL162 DSIS: PIN MM: MUX0	
VOUT[1]_VSYNC/ EMAC[1]_MCRS/ VIN[1]A_FLD/ VIN[1]A_DE/ **SPI[3]_D[0]/** UART3_CTS/ GP2[30]	AA23	I/O	IPD DVDD	VOUT[1], EMAC[1], VIN[1]A, UART3, GP2 PINCNTL206 DSIS: PIN MM: MUX2	
VOUT[1]_R_CR[7]/ EMAC[1]_MTXD[6]/ VIN[1]A_D[18]/ **SPI[3]_D[0]/** GP3[17]	V22	I/O	IPD DVDD	VOUT[1], EMAC[1], VIN[1]A, GP3 PINCNTL225 DSIS: PIN MM: MUX1	
VIN[0]A_D[23]/ CAM_D[15]/ EMAC[1]_RMTXEN/ **SPI[3]_D[0]/** GP0[17]	AC16	I/O	IPD DVDD_C	VIN[0]A, CAMERA_I/F, EMAC[1], GP0 PINCNTL163 DSIS: PIN MM: MUX0	

3.2.18 Oscillator/PLL, Audio Reference Clocks, and Clock Generator

Table 3-34. Oscillator/PLL, Audio Reference Clocks, and Clock Generator Terminal Functions

SIGNAL NAME	NO.	TYPE(1)	OTHER(2) (3)	MUXED	DESCRIPTION
CLOCK GENERATOR					
VIN[0]A_D[12]_BD[4]/ **CLKOUT1**/ GP2[17]	AG17	I/O	IPD DVDD	VIN[0]A, GP2 PINCNTL152 DSIS: PIN	Device Clock output 1. Can be used as a system clock for other devices.
GPMC_CLK/ GPMC_CS[5]/ GPMC_WAIT[1]/ **CLKOUT1**/ EDMA_EVT3/ TIM4_IO/ GP1[27]	R26	O	IPU DVDD_GPMC	GPMC, EDMA, TIM4, GP1 PINCNTL127 DSIS: N/A	
VIN[0]B_CLK/ **CLKOUT0**/ GP1[9]	AE17	I/O	IPD DVDD	VIN[0]B, GP1 PINCNTL134 DSIS: PIN	Device Clock output 0. Can be used as a system clock for other devices.
CLKIN32/ **CLKOUT0**/ TIM3_IO/ GP3[31]	J7	O	IPD DVDD	CLKIN32, TIM3, GP3 PINCNTL259 DSIS: N/A	
OSCILLATOR/PLL					
DEVOSC_MXI/ DEV_CLKIN	AH2	A I	– VDDA_1P8	–	Device Crystal input. Crystal connection to internal oscillator for system clock. Functions as DEV_CLKIN clock input when an ***external*** oscillator is used.
DEVOSC_MXO	AH3	A O	– VDDA_1P8	–	Device Crystal output. Crystal connection to internal oscillator for system clock. When device oscillator is BYPASSED, leave this pin unconnected.
VSSA_DEVOSC	AG3	GND			Supply Ground for DEV Oscillator. If the internal oscillator is bypassed, DEVOSC_VSS should be connected to ground (VSS).
AUXOSC_MXI/ AUX_CLKIN	R1	A I	– VDDA_1P8	–	Auxiliary Crystal input [Optional Audio/Video Reference Crystal Input]. Crystal connection to internal oscillator for auxiliary clock. Functions as AUX_CLKIN clock input when an external oscillator is used.
AUXOSC_MXO	T1	A O	– VDDA_1P8	–	Auxiliary Crystal output [Optional Audio/Video Reference Crystal Output]. When auxiliary oscillator is BYPASSED, leave this pin unconnected.
VSSA_AUXOSC	R2	GND			Supply Ground for AUX Oscillator. If the internal oscillator is bypassed, AUXOSC_VSS should be connected to ground (VSS).
CLKIN32/ CLKOUT0/ TIM3_IO/ GP3[31]	J7	I	IPD DVDD	CLKOUT0, TIMER 3, GP3 PINCNTL259 DSIS: PIN	RTC Clock input. Optional 32.768 KHz clock for RTC reference.
DEVOSC_WAKE/ SPI[1]_SCS[1]/ TIM5_IO/ GP1[7]	W6	I	IPU DVDD_SD	SPI[1], TIMER 5, GP1 PINCNTL7 DSIS: 1	Oscillator Wake-up input.

(1) I = Input, O = Output, Z = High impedance, S = Supply voltage, GND = Ground, A = Analog signal, MM = Multi Muxed, DSIS = De-selected Input State
(2) IPD = Internal Pulldown Active, IPU = Internal Pullup Active, DIS = Internal Pull Disabled. This represents the default state of the Internal Pull during and after Reset. For more detailed information on pullup/pulldown resistors and situations where external pullup/pulldown resistors are required, see Section 4.5.1, *Pullup/Pulldown Resistors* and Section 7.3.17, *Pin Behaviors at Reset*.
(3) Specifies the operating I/O supply voltage for each signal

Copyright © 2011–2013, Texas Instruments Incorporated

Table 3-34. Oscillator/PLL, Audio Reference Clocks, and Clock Generator Terminal Functions (continued)

SIGNAL NAME	NO.	TYPE(1)	OTHER(2) (3)	MUXED	DESCRIPTION
AUDIO REFERENCE CLOCKS					
AUD_CLKIN2/ MCA[0]_AXR[9]/ MCA[2]_AHCLKX/ MCA[5]_AHCLKX/ EDMA_EVT2/ TIM3_IO/ GP0[9]	H1	I	IPD DVDD	MCA[0], MCA[2], MCA[5], EDMA, TIMER 3, GP0 PINCNTL16 DSIS: PIN	Audio Reference Clock 2 for Audio Peripherals.
AUD_CLKIN1/ MCA[0]_AXR[8]/ MCA[1]_AHCLKX/ MCA[4]_AHCLKX/ EDMA_EVT3/ TIM2_IO/ GP0[8]	R5	I	IPD DVDD	MCA[0], MCA[1], MCA[4], EDMA, TIMER 2, GP0 PINCNTL15 DSIS: PIN	Audio Reference Clock 1 for Audio Peripherals.
AUD_CLKIN0/ MCA[0]_AXR[7]/ MCA[0]_AHCLKX/ MCA[3]_AHCLKX/USB1_DRVVBUS	L5	I	IPD DVDD	MCA[0], MCA[3], USB1 PINCNTL14 DSIS: PIN	Audio Reference Clock 0 for Audio Peripherals.

3.2.19 Timer

Table 3-35. Timer Terminal Functions

SIGNAL NAME	NO.	TYPE(1)	OTHER(2) (3)	MUXED	DESCRIPTION
Timers 8-1 and Watchdog Timer 0					
Timer 8 and Timer1					
There are no external pins for these timers.					
Timers TCLKIN					
TCLKIN/ GP0[30]	T2	I	IPD DVDD	GP0 PINCNTL60 DSIS: 0	Timer external clock input
Timer 7					
GPMC_$\overline{\text{BE[1]}}$/ GPMC_A[24]/ EDMA_EVT1/ **TIM7_IO**/ GP1[30]	V28	I/O	IPD DVDD_GPMC	GPMC, EDMA, GP1 PINCNTL132 DSIS: PIN MM: MUX3	Timer 7 capture event input or PWM output
SD2_DAT4 GPMC_A[27]/ GPMC_A[23]/ $\overline{\text{GPMC_CS[7]}}$/ EDMA_EVT0/ **TIM7_IO**/ GP1[22]	R24	I/O	IPU DVDD_GPMC	SD2, GPMC, EDMA, GP1 PINCNTL116 DSIS: PIN MM: MUX2	
VOUT[0]_AVID/ VOUT[0]_FLD/ SPI[3]_SCLK/ **TIM7_IO**/ GP2[21]	AA10	I/O	IPD DVDD	VOUT[0], SPI[3], GP2 PINCNTL179 DSIS: PIN MM: MUX1	
MCA[5]_AXR[1]/ MCA[4]_AXR[3]/ **TIM7_IO**/ GP0[28]	L6	I/O	IPD DVDD	MCA[5], MCA[4], GP0 PINCNTL58 DSIS: PIN MM: MUX0	
Timer 6					
GPMC_$\overline{\text{BE[0]}}$_CLE/ GPMC_A[25]/ EDMA_EVT2/ **TIM6_IO**/ GP1[29]	U27	I/O	IPD DVDD_GPMC	GPMC, EDMA, GP1 PINCNTL131 DSIS: PIN MM: MUX3	Timer 6 capture event input or PWM output
SD2_DAT[5]/ GPMC_A[26]/ GPMC_A[22]/ **TIM6_IO**/ GP1[21]	P22	I/O	IPU DVDD_GPMC	SD2, GPMC, GP1 PINCNTL115 DSIS: PIN MM: MUX2	
VOUT[1]_AVID/ EMAC[1]_MRXER/ VIN[1]A_CLK/ UART4_RTS/ **TIM6_IO**/ GP2[31]	Y22	I/O	IPD DVDD	VOUT[1], EMAC[1], VIN[1]A, UART4, GP2 PINCNTL207 DSIS: PIN MM: MUX1	
MCA[4]_AXR[1]/ **TIM6_IO**/ GP0[24]	J4	I/O	IPD DVDD	MCA[4], GP0 PINCNTL54 DSIS: PIN MM: MUX0	

(1) I = Input, O = Output, Z = High impedance, S = Supply voltage, GND = Ground, A = Analog signal, MM = Multi Muxed, DSIS = De-selected Input State
(2) IPD = Internal Pulldown Active, IPU = Internal Pullup Active, DIS = Internal Pull Disabled. This represents the default state of the Internal Pull after Reset. For more detailed information on pullup/pulldown resistors and situations where external pullup/pulldown resistors are required, see Section 4.5.1, *Pullup/Pulldown Resistors* and Section 7.3.17, *Pin Behaviors at Reset*.
(3) Specifies the operating I/O supply voltage for each signal

Copyright © 2011–2013, Texas Instruments Incorporated

Table 3-35. Timer Terminal Functions (continued)

SIGNAL NAME	NO.	TYPE(1)	OTHER(2) (3)	MUXED	DESCRIPTION
Timer 5					
GPMC_ADV_ALE/ GPMC_CS[6]/ **TIM5_IO**/ GP1[28]	M26	I/O	IPU DVDD_GPMC	GPMC, GP1 PINCNTL128 DSIS: PIN MM: MUX3	Timer 5 capture event input or PWM output
GPMC_A[23]/ SPI[2]_SCLK/ HDMI_HPDET/ **TIM5_IO**/ GP1[18]	AA26	I/O	IPD DVDD_GPMC	GPMC, SPI[2], HDMI, GP1 PINCNTL112 DSIS: PIN MM: MUX2	
DEVOSC_WAKE/ SPI[1]_SCS[1]/ **TIM5_IO**/ GP1[7]	W6	I/O	IPU DVDD_SD	OSC, SPI[1], GP1 PINCNTL7 DSIS: PIN MM: MUX1	
MCA[3]_AXR[1]/ **TIM5_IO**/ GP0[19]	G2	I/O	IPD DVDD	MCA[3], GP0 PINCNTL48 DSIS: PIN MM: MUX0	
Timer 4					
GPMC_CLK/ GPMC_CS[5]/ GPMC_WAIT[1]/ CLKOUT1/ EDMA_EVT3/ **TIM4_IO**/ GP1[27]	R26	I/O	IPU DVDD_GPMC	GPMC, CLKOUT1, EDMA, GP1 PINCNTL127 DSIS: PIN MM: MUX3	Timer 4 capture event input or PWM output
GPMC_A[22]/ SPI[2]_D[1]/ HDMI_CEC/ **TIM4_IO**/ GP1[17]	AB27	I/O	IPU DVDD_GPMC	GPMC, SPI[2], HDMI, GP1 PINCNTL111 DSIS: PIN MM: MUX2	
SPI[0]_SCS[1]/ SD1_SDCD/ SATA_ACT0_LED/ EDMA_EVT1/ **TIM4_IO**/ GP1[6]	AE5	I/O	IPU DVDD	SPI[0], SD1, SATA, EDMA, GP1 PINCNTL80 DSIS: PIN MM: MUX1	
MCA[3]_AXR[0]/ **TIM4_IO**/ GP0[18]	G1	I/O	IPD DVDD	MCA[3], GP0 PINCNTL47 DSIS: PIN MM: MUX0	

Table 3-35. Timer Terminal Functions (continued)

SIGNAL NAME	NO.	TYPE(1)	OTHER(2) (3)	MUXED	DESCRIPTION
Timer 3					
CLKIN32/ CLKOUT0/ **TIM3_IO**/ GP3[31]	J7	I/O	IPD DVDD	CLKIN32, CLKOUT, GP3 PINCNTL259 DSIS: PIN MM: MUX3	Timer 3 capture event input or PWM output
GPMC_A[19]/ **TIM3_IO**/ GP1[14]	AC27	I/O	IPD DVDD_GPMC	GPMC, GP1 PINCNTL108 DSIS: PIN MM: MUX2	
AUD_CLKIN2/ MCA[0]_AXR[9]/ MCA[2]_AHCLKX/ MCA[5]_AHCLKX/ EDMA_EVT2/ **TIM3_IO**/ GP0[9]	H1	I/O	IPD DVDD	AUD_CLKIN2, MCA[0], MCA[2]. MCA[5], EDMA, GP0 PINCNTL16 DSIS: PIN MM: MUX1	
MCA[2]_AXR[3]/ MCA[1]_AXR[7]/ **TIM3_IO**/ GP0[15]	H2	I/O	IPD DVDD	MCA[2], MCA[1], GP0 PINCNTL44 DSIS: PIN MM: MUX0	
Timer 2					
EMAC_RMREFCLK/ **TIM2_IO**/ GP1[10]	J27	I/O	IPD DVDD_GPMC	EMAC, GP1 PINCNTL232 DSIS: PIN MM: MUX3	Timer 2 capture event input or PWM output
GPMC_A[18]/ **TIM2_IO**/ GP0[13]	AE28	I/O	IPD DVDD_GPMC	GPMC, GP0 PINCNTL107 DSIS: PIN MM: MUX2	
AUD_CLKIN1/ MCA[0]_AXR[8]/ MCA[1]_AHCLKX/ MCA[4]_AHCLKX/ EDMA_EVT3/ **TIM2_IO**/ GP0[8]	R5	I/O	IPD DVDD	AUD_CLKIN1, MCA[0], MCA[1], MCA[4], EDMA, GP0 PINCNTL15 DSIS: PIN MM: MUX1	
MCA[2]_AXR[2]/ MCA[1]_AXR[6]/ **TIM2_IO**/ GP0[14]	V5	I/O	IPD DVDD	MCA[2], MCA[1], GP0 PINCNTL43 DSIS: PIN MM: MUX0	
Watchdog Timer 0					
$\overline{\text{RSTOUT_WD_OUT}}$		O	DIS DVDD	– PINCNTL262	Watchdog timer 0 event output

Copyright © 2011–2013, Texas Instruments Incorporated

3.2.20 UART

Table 3-36. UART0 Terminal Functions

SIGNAL NAME	SIGNAL NO.	TYPE (1)	OTHER (2) (3)	MUXED	DESCRIPTION
UART0					
UART0_RXD	AH5	I	IPU DVDD	– PINCNTL70 DSIS: PIN	UART0 Receive Data Input. Functions as IrDA receive input in IrDA modes and CIR receive input in CIR mode.
UART0_TXD	AG5	O	IPU DVDD	– PINCNTL71 DSIS: PIN	UART0 Transmit Data Output. Functions as CIR transmit output in CIR mode.
UART0_RTS/ UART4_TXD/ DCAN1_RX/ SPI[1]_SCS[2]/ SD2_SDCD	AF5	O	IPU DVDD	UART4, DCAN1, SPI[1], SD2 PINCNTL73 DSIS: PIN	UART0 Request to Send Output. Indicates module is ready to receive data. Functions as transmit data output in IrDA modes.
UART0_CTS/ UART4_RXD/ DCAN1_TX/ SPI[1]_SCS[3]/ SD0_SDCD	AE6	I/O	IPU DVDD	UART4, DCAN1, SPI[1], SD0 PINCNTL72 DSIS: 1	UART0 Clear to Send Input. Functions as SD transceiver control output in IrDA and CIR modes.
UART0_DTR/ UART3_CTS/ UART1_TXD/ GP1[4]	AG2	O	IPU DVDD	UART3, UART1, GP1 PINCNTL76 DSIS: PIN	UART0 Data Terminal Ready Output
UART0_DSR/ UART3_TXD/ SPI[0]_SCS[2]/ I2C[2]_SDA/ SD1_SDWP/ GP1[3]	AG4	I	IPU DVDD	UART3, SPI[0], I2C[2], SD1, GP1 PINCNTL75 DSIS: 1	UART0 Data Set Ready Input
UART0_DCD/ UART3_RXD/ SPI[0]_SCS[3]/ I2C[2]_SCL/ SD1_POW/ GP1[2]	AH4	I	IPU DVDD	UART3, SPI[0], I2C[2], SD1, GP1 PINCNTL74 DSIS: 1	UART0 Data Carrier Detect Input
UART0_RIN/ UART3_RTS/ UART1_RXD/ GP1[5]	AF4	I	IPU DVDD	UART3, UART1, GP1 PINCNTL77 DSIS: 1	UART0 Ring Indicator Input

(1) I = Input, O = Output, Z = High impedance, S = Supply voltage, GND = Ground, A = Analog signal, MM = Multi Muxed, DSIS = De-selected Input State
(2) IPD = Internal Pulldown Active, IPU = Internal Pullup Active, DIS = Internal Pull Disabled. This represents the default state of the Internal Pull after Reset. For more detailed information on pullup/pulldown resistors and situations where external pullup/pulldown resistors are required, see Section 4.5.1, *Pullup/Pulldown Resistors* and Section 7.3.17, *Pin Behaviors at Reset*.
(3) Specifies the operating I/O supply voltage for each signal

Table 3-37. UART1 Terminal Functions

SIGNAL NAME	NO.	TYPE(1)	OTHER(2) (3)	MUXED	DESCRIPTION
UART1					
EMAC[0]_MTXD[5]/ EMAC[1]_RGTXC/ EMAC[1]_RMCRSDV/ GPMC_A[12]/ **UART1_RXD**	F27	I	IPD DVDD_GPMC	EMAC[0], EMAC[1], GPMC PINCNTL255 DSIS: 1 MM: MUX1	UART1 Receive Data Input. Functions as IrDA receive input in IrDA modes and CIR receive input in CIR mode.
UART0_RIN/ UART3_RTS/ **UART1_RXD**/ GP1[5]	AF4	I	IPU DVDD	UART0, UART3, GP1 PINCNTL77 DSIS: 1 MM: MUX0	
EMAC[0]_MTXD[6]/ EMAC[1]_RGRXD[0]/ EMAC[1]_RMTXD[0]/ GPMC_A[13]/ **UART1_TXD**	J22	O	IPD DVDD_GPMC	EMAC[0], EMAC[1], GPMC PINCNTL256 DSIS: PIN MM: MUX1	UART1 Transmit Data Output. Functions as CIR transmit output in CIR mode.
UART0_DTR/ UART3_CTS/ **UART1_TXD**/ GP1[4]	AG2	O	IPU DVDD	UART0, UART3, GP1 PINCNTL76 DSIS: PIN MM: MUX0	
EMAC[0]_MTXEN/ EMAC[1]_RGRXD[2]/ EMAC[1]_RMTXEN/ GPMC_A[15]/ **UART1_RTS**	J23	O	IPD DVDD_GPMC	EMAC[0], EMAC[1], GPMC PINCNTL258 DSIS: PIN	UART1 Request to Send Output. Indicates module is ready to receive data. Functions as transmit data output in IrDA modes.
EMAC[0]_MTXD[7]/ EMAC[1]_RGTXD[3]/ EMAC[1]_RMTXD[1]/ GPMC_A[14]/ **UART1_CTS**	H24	I/O	IPD DVDD_GPMC	EMCA[0], EMAC[1], GPMC PINCNTL257 DSIS: 1	UART1 Clear to Send Input. Functions as SD transceiver control output in IrDA and CIR modes.

(1) I = Input, O = Output, Z = High impedance, S = Supply voltage, GND = Ground, A = Analog signal, MM = Multi Muxed, DSIS = De-selected Input State
(2) IPD = Internal Pulldown Active, IPU = Internal Pullup Active, DIS = Internal Pull Disabled. This represents the default state of the Internal Pull after Reset. For more detailed information on pullup/pulldown resistors and situations where external pullup/pulldown resistors are required, see Section 4.5.1, *Pullup/Pulldown Resistors* and Section 7.3.17, *Pin Behaviors at Reset*.
(3) Specifies the operating I/O supply voltage for each signal

Copyright © 2011–2013, Texas Instruments Incorporated

Table 3-38. UART2 Terminal Functions

SIGNAL NAME	NO.	TYPE(1)	OTHER(2) (3)	MUXED	DESCRIPTION
UART2					
SD2_DAT[7]/ GPMC_A[24]/ GPMC_A[20]/ **UART2_RXD**/ GP1[19]	L25	I	IPU DVDD_GPMC	SD2, GPMC, GP1 PINCNTL113 DSIS: 1 MM: MUX3	UART2 Receive Data Input. Functions as IrDA receive input in IrDA modes and CIR receive input in CIR mode.
DCAN0_RX/ **UART2_RXD**/ I2C[3]_SCL/ GP1[1]	AG6	I	IPU DVDD	DCAN0, I2C[3], GP1 PINCNTL69 DSIS: 1 MM: MUX2	
UART2_RXD/ GP0[29]	U4	I	IPD DVDD	GP0 PINCNTL59 DSIS: 1 MM: MUX1	
VOUT[1]_B_CB_C[1]/ CAM_HS/ GPMC_A[9]/ **UART2_RXD**/ GP0[26]	AE23	I	IPD DVDD_C	VOUT[1], CAMERA_I/F, GPMC, GP0 PINCNTL172 DSIS: 1 MM: MUX0	
SD2_DAT[6]/ GPMC_A[25]/ GPMC_A[21]/ **UART2_TXD**/ GP1[20]	N23	O	IPU DVDD_GPMC	SD2, GPMC, GP1 PINCNTL114 DSIS: PIN MM: MUX3	UART2 Transmit Data Output. Functions as CIR transmit output in CIR mode.
DCAN0_TX/ **UART2_TXD**/ I2C[3]_SDA/ GP1[0]	AH6	O	IPU DVDD	DCAN0, I2C[3], GP1 PINCNTL68 DSIS: PIN MM: MUX2	
UART2_TXD/ GP0[31]	U3	O	IPD DVDD	GP0 PINCNTL61 DSIS: PIN MM: MUX1	
VOUT[1]_B_CB_C[0]/ CAM_VS/ GPMC_A[10]/ **UART2_TXD**/ GP0[27]	AD23	O	IPU DVDD_C	VOUT[1], CAMERA_I/F, GPMC, GP0 PINCNTL173 DSIS: PIN MM: MUX0	
VOUT[0]_FLD/ CAM_PCLK/ GPMC_A[12]/ **UART2_RTS**/ GP2[2]	AF18	O	IPD DVDD_C	VOUT[0], CAMERA_I/F, GPMC, GP2 PINCNTL175 DSIS: PIN	UART2 Request to Send Output. Indicates module is ready to receive data. Functions as transmit data output in IrDA modes.
VOUT[1]_FLD/ CAM_FLD/ CAM_WE/ GPMC_A[11]/ **UART2_CTS**/ GP0[28]	AB23	I/O	IPD DVDD_C	VOUT[1], CAMERA_I/F, GPMC, GP0 PINCNTL174 DSIS: 1	UART2 Clear to Send Input. Functions as SD transceiver control output in IrDA and CIR modes.

(1) I = Input, O = Output, Z = High impedance, S = Supply voltage, GND = Ground, A = Analog signal, MM = Multi Muxed, DSIS = De-selected Input State
(2) IPD = Internal Pulldown Active, IPU = Internal Pullup Active, DIS = Internal Pull Disabled. This represents the default state of the Internal Pull after Reset. For more detailed information on pullup/pulldown resistors and situations where external pullup/pulldown resistors are required, see Section 4.5.1, *Pullup/Pulldown Resistors* and Section 7.3.17, *Pin Behaviors at Reset*.
(3) Specifies the operating I/O supply voltage for each signal

Table 3-39. UART3 Terminal Functions

SIGNAL NAME	NO.	TYPE(1)	OTHER(2)(3)	MUXED	DESCRIPTION
UART3					
VOUT[1]_B_CB_C[6]/ EMAC[1]_MRXD[2]/ VIN[1]A_D[3]/ **UART3_RXD**/ GP3[3]	AD25	I	IPD DVDD	VOUT[1], EMAC[1], VIN[1]A, GP3 PINCNTL211 DSIS: 1 MM: MUX1	UART3 Receive Data Input. Functions as IrDA receive input in IrDA modes and CIR receive input in CIR mode.
UART0_DCD/ **UART3_RXD**/ SPI[0]_SCS[3]/ I2C[2]_SCL/ SD1_POW/ GP1[2]	AH4	I	IPU DVDD	UART0, SPI[0], I2C[2], SD1, GP1 PINCNTL74 DSIS: 1 MM: MUX0	
VOUT[1]_B_CB_C[7]/ EMAC[1]_MRXD[3]/ VIN[1]A_D[4]/ **UART3_TXD**/ GP3[4]	AC25	O	IPD DVDD	VOUT[1], EMAC[1], VIN[1]A, GP3 PINCNTL212 DSIS: PIN MM: MUX1	UART3 Transmit Data Output. Functions as CIR transmit output in CIR mode.
UART0_DSR/ **UART3_TXD**/ SPI[0]_SCS[2]/ I2C[2]_SDA/ SD1_SDWP/ GP1[3]	AG4	O	IPU DVDD	UART0, SPI[0], I2C[2], SD1, GP1 PINCNTL75 DSIS: PIN MM: MUX0	
VOUT[1]_HSYNC/ EMAC[1]_MCOL/ VIN[1]A_VSYNC/ SPI[3]_D[1]/ **UART3_RTS**/ GP2[29]	AC24	O	IPD DVDD	VOUT[1], EMAC[1], VIN[1]A, SPI[3], GP2 PINCNTL205 DSIS: PIN MM: MUX1	UART3 Request to Send Output. Indicates module is ready to receive data. Functions as transmit data output in IrDA modes.
UART0_RIN/ **UART3_RTS**/ UART1_RXD/ GP1[5]	AF4	O	IPU DVDD	UART0, UART1, GP1 PINCNTL77 DSIS: PIN MM: MUX0	
VOUT[1]_VSYNC/ EMAC[1]_MCRS/ VIN[1]A_FLD/ VIN[1]A_DE/ SPI[3]_D[0]/ **UART3_CTS**/ GP2[30]	AA23	I/O	IPD DVDD	VOUT[1], EMAC[1], VIN[1]A, SPI[3], GP2 PINCNTL206 DSIS: 1 MM: MUX1	UART3 Clear to Send Input. Functions as SD transceiver control output in IrDA and CIR modes.
UART0_DTR/ **UART3_CTS**/ UART1_TXD/ GP1[4]	AG2	I/O	IPU DVDD	UART3, UART1, GP1 PINCNTL76 DSIS: 1 MM: MUX0	

(1) I = Input, O = Output, Z = High impedance, S = Supply voltage, GND = Ground, A = Analog signal, MM = Multi Muxed, DSIS = De-selected Input State
(2) IPD = Internal Pulldown Active, IPU = Internal Pullup Active, DIS = Internal Pull Disabled. This represents the default state of the Internal Pull after Reset. For more detailed information on pullup/pulldown resistors and situations where external pullup/pulldown resistors are required, see Section 4.5.1, *Pullup/Pulldown Resistors* and Section 7.3.17, *Pin Behaviors at Reset*.
(3) Specifies the operating I/O supply voltage for each signal

Copyright © 2011–2013, Texas Instruments Incorporated

Table 3-40. UART4 Terminal Functions

SIGNAL NAME	NO.	TYPE(1)	OTHER(2) (3)	MUXED	DESCRIPTION
UART4					
UART0_CTS/ **UART4_RXD**/ DCAN1_TX/ SPI[1]_SCS[3]/ SD0_SDCD	AE6	I	IPU DVDD	UART0, DCAN1, SPI[1], SD0 PINCNTL72 DSIS: 1 MM: MUX3	UART4 Receive Data Input. Functions as IrDA receive input in IrDA modes and CIR receive input in CIR mode.
VOUT[1]_B_CB_C[4]/ EMAC[1]_MRXD[0]/ VIN[1]A_D[1]/ **UART4_RXD**/ GP3[1]	AG25	I	IPD DVDD	VOUT[1], EMAC[1], VIN[1]A, GP3 PINCNTL209 DSIS: 1 MM: MUX2	
EMAC[0]_MTXD[1]/ EMAC[1]_RGTXD[1]/ GPMC_A[8]/ **UART4_RXD**	H25	I	IPD DVDD_GPMC	EMAC[0], EMAC[1], GPMC PINCNTL251 DSIS: 1 MM: MUX1	
VOUT[1]_G_Y_YC[1]/ CAM_D[3]/ GPMC_A[5]/ **UART4_RXD**/ GP0[22]	AD18	I	IPU DVDD_C	VOUT[1], CAMERA_I/F, GPMC, GP0 PINCNTL168 DSIS: 1 MM: MUX0	
UART0_RTS/ **UART4_TXD**/ DCAN1_RX/ SPI[1]_SCS[2]/ SD2_SDCD	AF5	O	IPU DVDD	UART0, DCAN1, SPI[1], SD2 PINCNTL73 DSIS: PIN MM: MUX3	UART4 Transmit Data Output. Functions as CIR transmit output in CIR mode.
VOUT[1]_B_CB_C[5]/ EMAC[1]_MRXD[1]/ VIN[1]A_D[2]/ **UART4_TXD**/ GP3[2]	AF25	O	IPD DVDD	VOUT[1], EMAC[1], VIN[1]A, GP3 PINCNTL210 DSIS: PIN MM: MUX2	
EMAC[0]_MTXD[2]/ EMAC[1]_RGTXCTL/ EMAC[1]_RMRXD[0]/ GPMC_A[9]/ **UART4_TXD**	H22	O	IPD DVDD_GPMC	EMAC[0], EMAC[1], GPMC PINCNTL252 DSIS: PIN MM: MUX1	
VOUT[1]_G_Y_YC[0]/ CAM_D[2]/ GPMC_A[6]/ **UART4_TXD**/ GP0[23]	AC18	O	IPD DVDD_C	VOUT[1], CAMERA_I/F, GPMC, GP0 PINCNTL169 DSIS: PIN MM: MUX0	

(1) I = Input, O = Output, Z = High impedance, S = Supply voltage, GND = Ground, A = Analog signal, MM = Multi Muxed, DSIS = De-selected Input State
(2) IPD = Internal Pulldown Active, IPU = Internal Pullup Active, DIS = Internal Pull Disabled. This represents the default state of the Internal Pull after Reset. For more detailed information on pullup/pulldown resistors and situations where external pullup/pulldown resistors are required, see Section 4.5.1, *Pullup/Pulldown Resistors* and Section 7.3.17, *Pin Behaviors at Reset*.
(3) Specifies the operating I/O supply voltage for each signal

Copyright © 2011–2013, Texas Instruments Incorporated

Table 3-40. UART4 Terminal Functions (continued)

SIGNAL NAME	NO.	TYPE(1)	OTHER(2) (3)	MUXED	DESCRIPTION
VOUT[1]_AVID/ EMAC[1]_MRXER/ VIN[1]A_CLK/ **UART4_RTS**/ TIM6_IO/ GP2[31]	Y22	O	IPD DVDD	VOUT[1], EMAC[1], VIN[1]A, TIMER6, GP2 PINCNTL207 DSIS: PIN MM: MUX2	UART4 Request to Send Output. Indicates module is ready to receive data. Functions as transmit data output in IrDA modes.
EMAC[0]_MTXD[4]/ EMAC[1]_RGTXD[2]/ EMAC[1]_RMRXER/ GPMC_A[11]/ **UART4_RTS**	G23	O	IPD DVDD_GPMC	EMAC[0], EMAC[1], GPMC PINCNTL254 DSIS: PIN MM: MUX1	
VOUT[1]_R_CR[0]/ CAM_D[0]/ GPMC_A[8]/ **UART4_RTS**/ GP0[25]	AA22	O	IPD DVDD_C	VOUT[1], CAMERA_I/F, GPMC, GP0 PINCNTL171 DSIS: PIN MM: MUX0	
VOUT[1]_B_CB_C[3]/ EMAC[1]_MRCLK/ VIN[1]A_D[0]/ **UART4_CTS**/ GP3[0]	AH25	I/O	IPD DVDD	VOUT[1], EMAC[1], VIN[1]A, GP3 PINCNTL208 DSIS: 1 MM: MUX2	UART4 Clear to Send Input. Functions as SD transceiver control output in IrDA and CIR modes.
EMAC[0]_MTXD[3]/ EMAC[1]_RGTXD[0]/ EMAC[1]_RMRXD[1]/ GPMC_A[10]/ **UART4_CTS**	H23	I/O	IPD DVDD_GPMC	EMAC[0], EMAC[1], GPMC PINCNTL253 DSIS: 1 MM: MUX1	
VOUT[1]_R_CR[1]/ CAM_D[1]/ GPMC_A[7]/ **UART4_CTS**/ GP0[24]	AC19	I/O	IPD DVDD_C	VOUT[1], CAMERA_I/F, GPMC, GP0 PINCNTL170 DSIS: 1 MM: MUX0	

Copyright © 2011–2013, Texas Instruments Incorporated

Table 3-41. UART5 Terminal Functions

SIGNAL NAME	NO.	TYPE (1)	OTHER (2) (3)	MUXED	DESCRIPTION
UART5					
MCA[2]_AXR[0]/ SD0_DAT[6]/ **UART5_RXD**/ GP0[12]	N2	I	IPU DVDD	MCA[2], SD0, GP0 PINCNTL41 DSIS: 1 MM: MUX3	UART5 Receive Data Input. Functions as IrDA receive input in IrDA modes and CIR receive input in CIR mode.
VOUT[1]_R_CR[8]/ EMAC[1]_MTXD[7]/ VIN[1]A_D[19]/ **UART5_RXD**/ GP3[18]	W23	I	IPD DVDD	VOUT[1], EMAC[1], VIN[1]A, GP3 PINCNTL226 DSIS: 1 MM: MUX2	
VIN[0]A_FLD/ VIN[0]B_VSYNC/ **UART5_RXD**/ I2C[2]_SCL/ GP2[1]	AA20	I	IPU DVDD	VIN[0]A, I2C[2], GP2 PINCNTL136 DSIS: 1 MM: MUX1	
EMAC[0]_MRXD[3]/ EMAC[1]_RGRXCTL / GPMC_A[27]/ GPMC_A[26]/ GPMC_A[0]/ **UART5_RXD**	J25	I	IPD DVDD_GPMC	EMAC[0], EMAC[1], GPMC PINCNTL243 DSIS: 1 MM: MUX0	
MCA[2]_AXR[1]/ SD0_DAT[7]/ **UART5_TXD**/ GP0[13]	V6	O	IPU DVDD	MCA[2], SD0, GP0 PINCNTL42 DSIS: PIN MM: MUX3	UART5 Transmit Data Output. Functions as CIR transmit output in CIR mode.
VOUT[1]_R_CR[9]/ EMAC[1]_MTXEN/ VIN[1]A_D[20]/ **UART5_TXD**/ GP3[19]	Y24	O	IPD DVDD	VOUT[1], EMAC[1], VIN[1]A, GP3 PINCNTL227 DSIS: PIN MM: MUX2	
VIN[0]A_DE/ VIN[0]B_HSYNC/ **UART5_TXD**/ I2C[2]_SDA/ GP2[0]	AE21	O	IPU DVDD	VIN[0]A, I2C[2], GP0 PINCNTL135 DSIS: PIN MM: MUX1	
EMAC[0]_MRXD[4]/ EMAC[0]_RGRXD[3] / GPMC_A[1]/ **UART5_TXD**	T23	O	IPD DVDD_GPMC	EMAC[0], GPMC PINCNTL244 DSIS: PIN MM: MUX0	
VIN[0]A_HSYNC/ **UART5_RTS**/ GP2[3]	AC20	O	IPU DVDD	VIN[0]A, GP2 PINCNTL138 DSIS: PIN MM: MUX1	UART5 Request to Send Output. Indicates module is ready to receive data. Functions as transmit data output in IrDA modes.
EMAC[0]_MRXD[6]/ EMAC[0]_RGTXD[2] / GPMC_A[3]/ **UART5_RTS**	F28	O	IPD DVDD_GPMC	EMAC[0], GPMC PINCNTL246 DSIS: PIN MM: MUX0	

(1) I = Input, O = Output, Z = High impedance, S = Supply voltage, GND = Ground, A = Analog signal, MM = Multi Muxed, DSIS = De-selected Input State
(2) IPD = Internal Pulldown Active, IPU = Internal Pullup Active, DIS = Internal Pull Disabled. This represents the default state of the Internal Pull after Reset. For more detailed information on pullup/pulldown resistors and situations where external pullup/pulldown resistors are required, see Section 4.5.1, *Pullup/Pulldown Resistors* and Section 7.3.17, *Pin Behaviors at Reset*.
(3) Specifies the operating I/O supply voltage for each signal

Copyright © 2011–2013, Texas Instruments Incorporated

Table 3-41. UART5 Terminal Functions (continued)

SIGNAL NAME	NO.	TYPE (1)	OTHER (2) (3)	MUXED	DESCRIPTION
VIN[0]A_VSYNC/ **UART5_CTS**/ GP2[4]	AD20	I/O	IPU DVDD	VIN[0]A, GP2 PINCNTL139 DSIS: 1 MM: MUX1	UART5 Clear to Send Input. Functions as SD transceiver control output in IrDA and CIR modes.
EMAC[0]_MRXD[5]/ EMAC[0]_RGTXD[3] / GPMC_A[2]/ **UART5_CTS**	H26	I/O	IPD DVDD_GPMC	EMAC[0], GPMC PINCNTL245 DSIS: 1 MM: MUX0	

Copyright © 2011–2013, Texas Instruments Incorporated

3.2.21 USB

Table 3-42. USB Terminal Functions

SIGNAL NAME	NO.	TYPE(1)	OTHER(2) (3)	MUXED	DESCRIPTION
USB0					
USB0_DP	AG11	A I/O	– VDDA_USB_3P3	–	USB0 bidirectional data differential signal pair [plus/minus].
USB0_DM	AH11	A I/O	– VDDA_USB_3P3	–	When the USB0 PHY is powered down, these pins should be left unconnected.
USB0_ID	AG10	A I	– VDDA_USB_3P3	–	USB0 OTG identification input. When the USB0 PHY is powered down, this pin should be left unconnected.
USB0_CE	AH10	A O	– VDDA_USB_3P3	–	USB0 charger enable. When the USB0 PHY is powered down, this pin should be left unconnected.
USB0_VBUSIN	AG12	A I	– VDDA_USB_3P3	–	5-V USB0 VBUS comparator input. This analog input pin senses the level of the USB VBUS voltage and should connect directly to the USB VBUS voltage. When the USB0 PHY is powered down, this pin should be left unconnected.
USB0_DRVVBUS/ GP0[7]	AF11	O	IPD DVDD	GP0 PINCNTL270 DSIS: N/A	When this pin is used as USB0_DRVVBUS and the USB0 Controller is operating as a Host, this signal is used by the USB0 Controller to enable the external VBUS charge pump. When the USB0 PHY is powered down, this pin should be left unconnected.
USB1					
USB1_DP	AG13	A I/O	– VDDA_USB_3P3	–	USB1 bidirectional data differential signal pair [plus/minus].
USB1_DM	AH13	A I/O	– VDDA_USB_3P3	–	When the USB1 PHY is powered down, these pins should be left unconnected.
USB1_ID	AH12	A I	– VDDA_USB_3P3	–	USB1 OTG identification input. When the USB1 PHY is powered down, this pin should be left unconnected.
USB1_CE	AH14	A O	– VDDA_USB_3P3	–	USB1 charger enable. When the USB1 PHY is powered down, this pin should be left unconnected.
USB1_VBUSIN	AG14	A I	– VDDA_USB_3P3	–	5-V USB1 VBUS comparator input. This analog input pin senses the level of the USB VBUS voltage and should connect directly to the USB VBUS voltage. When the USB1 PHY is powered down, this pin should be left unconnected.
AUD_CLKIN0/ MCA[0]_AXR[7]/ MCA[0]_AHCLKX/ MCA[3]_AHCLKX/ **USB1_DRVVBUS**	L5	O	IPD DVDD	AUD_CLKIN0, MCA[0], MCA[3], PINCNTL14 DSIS: N/A	When this pin is used as USB1_DRVVBUS and the USB1 Controller is operating as a Host, this signal is used by the USB1 Controller to enable the external VBUS charge pump. When the USB1 PHY is powered down, this pin should be left unconnected.

(1) I = Input, O = Output, Z = High impedance, S = Supply voltage, GND = Ground, A = Analog signal, MM = Multi Muxed, DSIS = De-selected Input State
(2) IPD = Internal Pulldown Active, IPU = Internal Pullup Active, DIS = Internal Pull Disabled. This represents the default state of the Internal Pull after Reset. For more detailed information on pullup/pulldown resistors and situations where external pullup/pulldown resistors are required, see Section 4.5.1, *Pullup/Pulldown Resistors* and Section 7.3.17, *Pin Behaviors at Reset*.
(3) Specifies the operating I/O supply voltage for each signal

Copyright © 2011–2013, Texas Instruments Incorporated

3.2.22 Video Input (Digital)

Table 3-43. Video Input 0 (Digital) Terminal Functions

SIGNAL NAME	NO.	TYPE(1)	OTHER(2) (3)	MUXED	DESCRIPTION
Video Input 0 (Digital)					
VIN[0]B_CLK/ CLKOUT0/ GP1[9]	AE17	I	IPD DVDD	CLKOUT0, GP1 PINCNTL134 DSIS: 0	Video Input 0 Port B Clock input. Input clock for 8-bit Port B video capture. This signal is not used in 16-bit and 24-bit capture modes.
VIN[0]A_CLK/ GP2[2]	AB20	I	IPD DVDD	GP2 PINCNTL137 DSIS: 0	Video Input 0 Port A Clock input. Input clock for 8-bit , 16-bit, or 24-bit Port A video capture.
VIN[0]A_D[23]/ CAM_D[15]/ EMAC[1]_RMTXEN/ SPI[3]_D[0]/ GP0[17]	AC16	I	IPD DVDD_C	CAM_IF, EMAC[1]_RM, SPI[3], GP0 PINCNTL163 DSIS: PIN	Video Input 0 Data inputs. For 16-bit capture, D[7:0] are Cb/Cr and [15:8] are Y Port A inputs. For 8-bit capture, D[7:0] are Port A YCbCr data inputs and D[15:8] are Port B YCbCr data inputs. For RGB capture, D[23:16] are R, D[15:8] are G, and D[7:0] are B data inputs.
VIN[0]A_D[22]/ CAM_D[14]/ EMAC[1]_RMTXD[1]/ SPI[3]_D[1]/ GP0[16]	AC21	I	IPD DVDD_C	CAM_IF, EMAC[1]_RM, SPI[3], GP0 PINCNTL162 DSIS: PIN	
VIN[0]A_D[21]/ CAM_D[13]/ EMAC[1]_RMTXD[0]/ SPI[3]_SCLK/ GP0[15]	AE18	I	IPD DVDD_C	CAM_IF, EMAC[1]_RM, SPI[3], GP0 PINCNTL161 DSIS: PIN	
VIN[0]A_D[20]/ CAM_D[12]/ EMAC[1]_RMCRSDV/ SPI[3]_SCS[0]/ GP0[14]	AC17	I	IPD DVDD_C	CAM_IF, EMAC[1]_RM, SPI[3], GP0 PINCNTL160 DSIS: PIN	
VIN[0]A_D[19]/ CAM_D[11]/ EMAC[1]_RMRXD[0]/ I2C[3]_SDA/ GP0[13]	AF21	I	IPU DVDD_C	CAM_IF, EMAC[1]_RM, I2C[3], GP0 PINCNTL159 DSIS: PIN	
VIN[0]A_D[18]/ CAM_D[10]/ EMAC[1]_RMRXD[1]/ I2C[3]_SCL/ GP0[12]	AF20	I	IPU DVDD_C	CAM_IF, EMAC[1]_RM, I2C[3], GP0 PINCNTL158 DSIS: PIN	
VIN[0]A_D[17]/ CAM_D[9]/ EMAC[1]_RMRXER/ GP0[11]	AB21	I	IPD DVDD_C	CAM_IF, EMAC[1]_RM, I2C[3], GP0 PINCNTL157 DSIS: PIN	
VIN[0]A_D[16]/ CAM_D[8]/ I2C[2]_SCL/ GP0[10]	AA21	I	IPU DVDD_C	CAM_IF, I2C[3], GP0 PINCNTL156 DSIS: PIN	

(1) I = Input, O = Output, Z = High impedance, S = Supply voltage, GND = Ground, A = Analog signal, MM = Multi Muxed, DSIS = De-selected Input State
(2) IPD = Internal Pulldown Active, IPU = Internal Pullup Active, DIS = Internal Pull Disabled. This represents the default state of the Internal Pull after Reset. For more detailed information on pullup/pulldown resistors and situations where external pullup/pulldown resistors are required, see Section 4.5.1, *Pullup/Pulldown Resistors* and Section 7.3.17, *Pin Behaviors at Reset*.
(3) Specifies the operating I/O supply voltage for each signal.

Copyright © 2011–2013, Texas Instruments Incorporated

Table 3-43. Video Input 0 (Digital) Terminal Functions (continued)

SIGNAL NAME	NO.	TYPE(1)	OTHER(2) (3)	MUXED	DESCRIPTION
VIN[0]A_D[15]_BD[7]/ CAM_SHUTTER/ GP2[20]	AC14	I	IPD DVDD	CAM_IF, GP2 PINCNTL155 DSIS: PIN	Video Input 0 Data inputs. For 16-bit capture, D[7:0] are Cb/Cr and [15:8] are Y Port A inputs. For 8-bit capture, D[7:0] are Port A YCbCr data inputs and D[15:8] are Port B YCbCr data inputs. For RGB capture, D[23:16] are R, D[15:8] are G, and D[7:0] are B data inputs.
VIN[0]A_D[14]_BD[6]/ CAM_STROBE/ GP2[19]	AC12	I	IPD DVDD	CAM_IF, GP2 PINCNTL154 DSIS: PIN	
VIN[0]A_D[13]_BD[5]/ CAM_RESET/ GP2[18]	AF17	I	IPD DVDD	CAM_IF, GP2 PINCNTL153 DSIS: PIN	
VIN[0]A_D[12]_BD[4]/ CLKOUT1/ GP2[17]	AG17	I	IPD DVDD	CLKOUT1, GP2 PINCNTL152 DSIS: PIN	
VIN[0]A_D[11]_BD[3]/ CAM_WE/ GP2[16]	AH17	I	IPD DVDD	CAM_IF, GP2 PINCNTL151 DSIS: PIN	
VIN[0]A_D[10]_BD[2]/ GP2[15]	AH9	I	IPD DVDD	GP2 PINCNTL150 DSIS: PIN	
VIN[0]A_D[9]_BD[1]/ GP2[14]	AG9	I	IPD DVDD	GP2 PINCNTL149 DSIS: PIN	
VIN[0]A_D[8]_BD[0]/ GP2[13]	AB15	I	IPD DVDD	GP2 PINCNTL148 DSIS: PIN	
VIN[0]A_D[7]/ GP2[12]	AA11	I	IPD DVDD	GP2 PINCNTL147 DSIS: PIN	Video Input 0 Data inputs. For 16-bit capture, D[7:0] are Cb/Cr and [15:8] are Y Port A inputs. For 8-bit capture, D[7:0] are Port A YCbCr data inputs and D[15:8] are Port B YCbCr data inputs. For RGB capture, D[23:16] are R, D[15:8] are G, and D[7:0] are B data inputs.
VIN[0]A_D[6]/ GP2[11]	AH16	I	IPD DVDD	GP2 PINCNTL146 DSIS: PIN	
VIN[0]A_D[5]/ GP2[10]	AG16	I	IPD DVDD	GP2 PINCNTL145 DSIS: PIN	
VIN[0]A_D[4]/ GP2[9]	AH8	I	IPD DVDD	GP2 PINCNTL144 DSIS: PIN	
VIN[0]A_D[3]/ GP2[8]	AE12	I	IPD DVDD	GP2 PINCNTL143 DSIS: PIN	
VIN[0]A_D[2]/ GP2[7]	AC9	I	IPD DVDD	GP2 PINCNTL142 DSIS: PIN	
VIN[0]A_D[1]/ GP1[12]	AB11	I	IPD DVDD	GP1 PINCNTL141 DSIS: PIN	
VIN[0]A_D[0]/ GP1[11]	AF9	I	IPD DVDD	GP1 PINCNTL140 DSIS: PIN	
VIN[0]A_DE/ **VIN[0]B_HSYNC**/ UART5_TXD/ I2C[2]_SDA/ GP2[0]	AE21	I	IPU DVDD	VIN[0]A, UART5, I2C[2], GP2 PINCNTL135 DSIS: 0	Video Input 0 Port B Horizontal Sync input. Discrete horizontal synchronization signal for Port B 8-bit YCbCr capture without embedded syncs (“BT.601” modes). Not used in RGB or 16-bit YCbCr capture modes
VIN[0]A_HSYNC/ UART5_RTS/ GP2[3]	AC20	I	IPU DVDD	UART5, GP2 PINCNTL138 DSIS: 0	Video Input 0 Port A Horizontal Sync0 input. Discrete horizontal synchronization signal for Port A RGB capture mode or YCbCr capture without embedded syncs (“BT.601” modes).

Table 3-43. Video Input 0 (Digital) Terminal Functions (continued)

SIGNAL NAME	SIGNAL NO.	TYPE(1)	OTHER(2) (3)	MUXED	DESCRIPTION
VIN[0]A_FLD/ **VIN[0]B_VSYNC**/ UART5_RXD/ I2C[2]_SCL/ GP2[1]	AA20	I	IPU DVDD	VIN[0]A, UART5, I2C[2], GP2 PINCNTL136 DSIS:0	Video Input 0 Port B Vertical Sync1 input. Discrete vertical synchronization signal for Port B 8-bit YCbCr capture without embedded syncs (“BT.601” modes). Not used in RGB or 16-bit YCbCr capture modes.
VIN[0]A_VSYNC/ UART5_CTS/ GP2[4]	AD20	I	IPU DVDD	UART5, GP2 PINCNTL139 DSIS: 0	Video Input 0 Port A Vertical Sync0 input. Discrete vertical synchronization signal for Port A RGB capture mode or YCbCr capture without embedded syncs (“BT.601” modes).
VIN[0]B_FLD/ CAM_D[4]/ GP0[21]	AD17	I	IPU DVDD_C	CAMERA_I/F, GP0 PINCNTL167 DSIS: 0	Video Input 0 Port B Field ID input. Discrete field identification signal for Port B 8-bit YCbCr capture without embedded syncs (“BT.601” modes). Not used in RGB or 16-bit YCbCr capture modes.
VIN[0]A_FLD/ CAM_D[5]/ GP0[20]	AC22	I	IPU DVDD_C	CAMERA_I/F, GP0 PINCNTL166 DSIS: 0 MM: MUX1	Video Input 0 Port A Field ID input. Discrete field identification signal for Port A RGB capture mode or YCbCr capture without embedded syncs (“BT.601” modes).
VIN[0]A_FLD/ VIN[0]B_VSYNC/ UART5_RXD/ I2C[2]_SCL/ GP2[1]	AA20	I	IPU DVDD	VIN[0]B, UART5, I2C[2], GP2 PINCNTL136 DSIS: 0 MM: MUX0	
VIN[0]B_DE/ CAM_D[6]/ GP0[19]	AC15	I	IPU DVDD_C	CAMERA_I/F, GP0 PINCNTL165 DSIS: 0	Video Input 0 Port B Data Enable input. Discrete data valid signal for Port B RGB capture mode or YCbCr capture without embedded syncs (“BT.601” modes).
VIN[0]A_DE/ CAM_D[7]/ GP0[18]	AB17	I	IPU DVDD_C	CAMERA_I/F, GP0 PINCNTL164 DSIS: 0 MM: MUX1	Video Input 0 Port A Data Enable input. Discrete data valid signal for Port A RGB capture mode or YCbCr capture without embedded syncs ("BT.601" modes).
VIN[0]A_DE/ VIN[0]B_HSYNC/ UART5_TXD/ I2C[2]_SDA/ GP2[0]	AE21	I	IPU DVDD	VIN[0]B, UART5, I2C[2], GP2 PINCNTL135 DSIS: 0 MM: MUX0	

Copyright © 2011–2013, Texas Instruments Incorporated

Table 3-44. Video Input 1 (Digital) Terminal Functions

SIGNAL NAME	NO.	TYPE(1)	OTHER(2) (3)	MUXED	DESCRIPTION
Video Input 1 (Digital)					
GPMC_CS[3]/ **VIN[1]B_CLK**/ SPI[2]_SCS[0]/ GP1[26]	P26	I	IPU DVDD_GPMC	GPMC, SPI[2], GP1 PINCNTL125 DSIS: 0	Video Input 1 Port B Clock input. Input clock for 8-bit Port B video capture. Input data is sampled on the CLK1 edge. This signal is not used in 16-bit and 24-bit capture modes.
VOUT[1]_AVID/ EMAC[1]_MRXER/ **VIN[1]A_CLK**/ UART4_RTS/ TIM6_IO/ GP2[31]	Y22	I	IPD DVDD	VOUT[1], EMAC[1], UART4, TIMER 6, GP2 PINCNTL207 DSIS: 0	Video Input 1 Port A Clock input. Input clock for 8-bit , 16-bit, or 24-bit Port A video capture. Input data is sampled on the CLK0 edge.
VOUT[1]_R_CR[2]/ GPMC_A[15]/ **VIN[1]A_D[23]**/ HDMI_HPDET/ SPI[2]_D[1]/ GP3[22]	AE27	I	IPD DVDD	VOUT[1], GPMC, HDMI, SPI[2], GP3 PINCNTL230 DSIS: PIN	Video Input 1 Data inputs. For 16-bit capture, D[7:0] are Cb/Cr and [15:8] are Y Port A inputs. For 8-bit capture, D[7:0] are Port A YCbCr data inputs. For RGB capture, D[23:16] are R, D[15:8] are G, and D[7:0] are B Port A data inputs.
VOUT[1]_R_CR[3]/ GPMC_A[14]/ **VIN[1]A_D[22]**/ HDMI_SDA/ SPI[2]_SCLK/ I2C[2]_SDA/ GP3[21]	AG28	I	IPU DVDD	VOUT[1], GPMC, HDMI, SPI[2], I2C[2], GP3 PINCNTL229 DSIS: PIN	
VOUT[1]_G_Y_YC[2]/ GPMC_A[13]/ **VIN[1]A_D[21]**/ HDMI_SCL/ SPI[2]_SCS[2]/ I2C[2]_SCL/ GP3[20]	AF27	I	IPU DVDD	VOUT[1], GPMC, HDMI, SPI[2], I2C[2], GP3 PINCNTL228 DSIS: PIN	
VOUT[1]_R_CR[9]/ EMAC[1]_MTXEN/ **VIN[1]A_D[20]**/ UART5_TXD/ GP3[19]	Y24	I	IPD DVDD	VOUT[1], EMAC[1], UART5, GP3 PINCNTL227 DSIS: PIN	
VOUT[1]_R_CR[8]/ EMAC[1]_MTXD[7]/ **VIN[1]A_D[19]**/ UART5_RXD/ GP3[18]	W23	I	IPD DVDD	VOUT[1], EMAC[1], UART5, GP3 PINCNTL226 DSIS: PIN	Video Input 1 Data inputs. For 16-bit capture, D[7:0] are Cb/Cr and [15:8] are Y Port A inputs. For 8-bit capture, D[7:0] are Port A YCbCr data inputs. For RGB capture, D[23:16] are R, D[15:8] are G, and D[7:0] are B Port A data inputs.
VOUT[1]_R_CR[7]/ EMAC[1]_MTXD[6]/ **VIN[1]A_D[18]**/ SPI[3]_D[0]/ GP3[17]	V22	I	IPD DVDD	VOUT[1], EMAC[1], SPI[3], GP3 PINCNTL225 DSIS: PIN	
VOUT[1]_R_CR[6]/ EMAC[1]_MTXD[5]/ **VIN[1]A_D[17]**/ SPI[3]_D[1]/ GP3[16]	AA25	I	IPD DVDD	VOUT[1], EMAC[1], SPI[3], GP3 PINCNTL224 DSIS: PIN	
VOUT[1]_R_CR[5]/ EMAC[1]_MTXD[4]/ **VIN[1]A_D[16]**/ SPI[3]_SCLK/ GP3[15]	AC26	I	IPD DVDD	VOUT[1], EMAC[1], SPI[3], GP3 PINCNTL223 DSIS: PIN	

(1) I = Input, O = Output, Z = High impedance, S = Supply voltage, GND = Ground, A = Analog signal, MM = Multi Muxed, DSIS = De-selected Input State
(2) IPD = Internal Pulldown Active, IPU = Internal Pullup Active, DIS = Internal Pull Disabled. This represents the default state of the Internal Pull after Reset. For more detailed information on pullup/pulldown resistors and situations where external pullup/pulldown resistors are required, see Section 4.5.1, *Pullup/Pulldown Resistors* and Section 7.3.17, *Pin Behaviors at Reset*.
(3) Specifies the operating I/O supply voltage for each signal

Copyright © 2011–2013, Texas Instruments Incorporated

Table 3-44. Video Input 1 (Digital) Terminal Functions (continued)

SIGNAL NAME	NO.	TYPE(1)	OTHER(2) (3)	MUXED	DESCRIPTION
VOUT[1]_R_CR[4]/ EMAC[1]_MTXD[3]/ **VIN[1]A_D[15]**/ SPI[3]_SCS[1]/ GP3[14]	AG27	I	IPD DVDD	VOUT[1], EMAC[1], SPI[3], GP3 PINCNTL222 DSIS: PIN	Video Input 1 Data inputs. For 16-bit capture, D[7:0] are Cb/Cr and [15:8] are Y Port A inputs. For 8-bit capture, D[7:0] are Port A YCbCr data inputs. For RGB capture, D[23:16] are R, D[15:8] are G, and D[7:0] are B Port A data inputs.
VOUT[1]_G_Y_YC[9]/ EMAC[1]_MTXD[2]/ **VIN[1]A_D[14]**/ GP3[13]	AD26	I	IPD DVDD	VOUT[1], EMAC[1], GP3 PINCNTL221 DSIS: PIN	
VOUT[1]_G_Y_YC[8]/ EMAC[1]_MTXD[1]/ **VIN[1]A_D[13]**/ GP3[12]	AE26	I	IPD DVDD	VOUT[1], EMAC[1], GP3 PINCNTL220 DSIS: PIN	
VOUT[1]_G_Y_YC[7]/ EMAC[1]_MTXD[0]/ **VIN[1]A_D[12]**/ GP3[11]	AF26	I	IPD DVDD	VOUT[1], EMAC[1], GP3 PINCNTL219 DSIS: PIN	
VOUT[1]_G_Y_YC[6]/ EMAC[1]_GMTCLK/ **VIN[1]A_D[11]**/ GP3[10]	AH27	I	IPD DVDD	VOUT[1], EMAC[1], GP3 PINCNTL218 DSIS: PIN	
VOUT[1]_G_Y_YC[5]/ EMAC[1]_MRXDV/ **VIN[1]A_D[10]**/ GP3[9]	AG26	I	IPD DVDD	VOUT[1], EMAC[1], GP3 PINCNTL217 DSIS: PIN	
VOUT[1]_G_Y_YC[4]/ EMAC[1]_MRXD[7]/ **VIN[1]A_D[9]**/ GP3[8]	W22	I	IPD DVDD	VOUT[1], EMAC[1], GP3 PINCNTL216 DSIS: PIN	
VOUT[1]_G_Y_YC[3]/ EMAC[1]_MRXD[6]/ **VIN[1]A_D[8]**/ GP3[7]	Y23	I	IPD DVDD	VOUT[1], EMAC[1], GP3 PINCNTL215 DSIS: PIN	

Copyright © 2011–2013, Texas Instruments Incorporated

Table 3-44. Video Input 1 (Digital) Terminal Functions (continued)

SIGNAL NAME	NO.	TYPE(1)	OTHER(2) (3)	MUXED	DESCRIPTION
VOUT[1]_B_CB_C[2]/ GPMC_A[0]/ **VIN[1]A_D[7]**/ HDMI_CEC/ SPI[2]_D[0]/ GP3[30]	AF28	I	IPU DVDD	VOUT[1], GPMC, HDMI, SPI[2], GP3 PINCNTL231 DSIS: PIN	Video Input 1 Data inputs. For 16-bit capture, D[7:0] are Cb/Cr and [15:8] are Y Port A inputs. For 8-bit capture, D[7:0] are Port A YCbCr data inputs. For RGB capture, D[23:16] are R, D[15:8] are G, and D[7:0] are B Port A data inputs.
VOUT[1]_B_CB_C[9]/ EMAC[1]_MRXD[5]/ **VIN[1]A_D[6]**/ I2C[3]_SDA/ GP3[6]	AA24	I	IPD DVDD	VOUT[1], EMAC[1], I2C[3], GP3 PINCNTL214 DSIS: PIN	
VOUT[1]_B_CB_C[8]/ EMAC[1]_MRXD[4]/ **VIN[1]A_D[5]**/ I2C[3]_SCL/ GP3[5]	AH26	I	IPD DVDD	VOUT[1], EMAC[1], I2C[3], GP3 PINCNTL213 DSIS: PIN	
VOUT[1]_B_CB_C[7]/ EMAC[1]_MRXD[3]/ **VIN[1]A_D[4]**/ UART3_TXD/ GP3[4]	AC25	I	IPD DVDD	VOUT[1], EMAC[1], UART3, GP3 PINCNTL212 DSIS: PIN	
VOUT[1]_B_CB_C[6]/ EMAC[1]_MRXD[2]/ **VIN[1]A_D[3]**/ UART3_RXD/ GP3[3]	AD25	I	IPD DVDD	VOUT[1], EMAC[1], UART3, GP3 PINCNTL211 DSIS: PIN	
VOUT[1]_B_CB_C[5]/ EMAC[1]_MRXD[1]/ **VIN[1]A_D[2]**/ UART4_TXD/ GP3[2]	AF25	I	IPD DVDD	VOUT[1], EMAC[1], UART4, GP3 PINCNTL210 DSIS: PIN	
VOUT[1]_B_CB_C[4]/ EMAC[1]_MRXD[0]/ **VIN[1]A_D[1]**/ UART4_RXD/ GP3[1]	AG25	I	IPD DVDD	VOUT[1], EMAC[1], UART4, GP3 PINCNTL209 DSIS: PIN	
VOUT[1]_B_CB_C[3]/ EMAC[1]_MRCLK/ **VIN[1]A_D[0]**/ UART4_CTS/ GP3[0]	AH25	I	IPD DVDD	VOUT[1], EMAC[1], UART4, GP3 PINCNTL208 DSIS: PIN	
EMAC[0]_MRXD[2]/ EMAC[0]_RGRXD[1]/ **VIN[1]B_D[7]**/ EMAC[0]_RMTXEN/ GP3[30]	R23	I	IPD DVDD_GPMC	EMAC[0], GP3 PINCNTL242 DSIS: PIN	Video Input 1 Port B Data inputs. For 8-bit capture, B_D[7:0] are Port B YCbCr data inputs.
EMAC[0]_MRXD[1]/ EMAC[0]_RGRXD[0]/ **VIN[1]B_D[6]**/ EMAC[0]_RMTXD[1]/ GP3[29]	P23	I	IPD DVDD_GPMC	EMAC[0], GP3 PINCNTL241 DSIS: PIN	
EMAC[0]_MRXD[0]/ EMAC[0]_RGTXD[0]/ **VIN[1]B_D[5]**/ EMAC[0]_RMTXD[0]/ GP3[28]	G28	I	IPD DVDD_GPMC	EMAC[0], GP3 PINCNTL240 DSIS: PIN	
EMAC[0]_MRCLK/ EMAC[0]_RGTXC/ **VIN[1]B_D[4]**/ EMAC[0]_RMCRSDV/ SPI[3]_SCS[2]/ GP3[27]	H27	I	IPD DVDD_GPMC	EMAC[0], SPI[3], GP3 PINCNTL239 DSIS: PIN	

Copyright © 2011–2013, Texas Instruments Incorporated

Table 3-44. Video Input 1 (Digital) Terminal Functions (continued)

SIGNAL NAME	NO.	TYPE(1)	OTHER(2) (3)	MUXED	DESCRIPTION
EMAC[0]_MRXER/ EMAC[0]_RGTXCTL/ **VIN[1]B_D[3]**/ EMAC[0]_RMRXER/ GP3[26]	J26	I	IPD DVDD_GPMC	EMAC[0], GP3 PINCNTL238 DSIS: PIN	Video Input Port B Data inputs. For 8-bit capture, B_D[7:0] are Port B YCbCr data inputs.
EMAC[0]_MCRS/ EMAC[0]_RGRXD[2]/ **VIN[1]B_D[2]**/ EMAC[0]_RMRXD[1]/ GP3[25]	R25	I	IPD DVDD_GPMC	EMAC[0], GP3 PINCNTL237 DSIS: PIN	
EMAC[0]_MCOL/ EMAC[0]_RGRXCTL/ **VIN[1]B_D[1]**/ EMAC[0]_RMRXD[0]/ GP3[24]	L23	I	IPD DVDD_GPMC	EMAC[0], GP3 PINCNTL236 DSIS: PIN	
EMAC[0]_MTCLK/ EMAC[0]_RGRXC/ **VIN[1]B_D[0]**/ SPI[3]_SCS[3]/ I2C[2]_SDA/ GP3[23]	L24	I	IPD DVDD_GPMC	EMAC[0], SPI[3], I2C[2], GP3 PINCNTL235 DSIS: PIN	
VOUT[1]_CLK/ EMAC[1]_MTCLK/ **VIN[1]A_HSYNC/** GP2[28]	AE24	I	IPD DVDD	VOUT[1], EMAC[1], GP2 PINCNTL204 DSIS: 0	Video Input 1 Port A Horizontal Sync input. Discrete horizontal synchronization signal forPort A YCbCr capture modes without embedded syncs (“BT.601” modes).
VOUT[1]_HSYNC/ EMAC[1]_MCOL/ **VIN[1]A_VSYNC**/ SPI[3]_D[1]/ UART3_RTS/ GP2[29]	AC24	I	IPD DVDD	VOUT[1], EMAC[1], SPI[3], UART3, GP2 PINCNTL205 DSIS: 0	Video Input 1 Port A Vertical Sync input. Discrete vertical synchronization signal for Port A YCbCr capture modes without embedded syncs (“BT.601” modes).
VOUT[1]_VSYNC/ EMAC[1]_MCRS/ VIN[1]A_FLD/ **VIN[1]A_DE**/ SPI[3]_D[0]/ UART3_CTS/ GP2[30]	AA23	I	IPD DVDD	VOUT[1], EMAC[1], VIN[1]A, SPI[3], UART3, GP2 PINCNTL206 DSIS: 0	Video Input 1 Port A Data Enable input. Discrete data valid signal for Port A YCbCr capture modes without embedded syncs (“BT.601” modes).
VOUT[1]_VSYNC/ EMAC[1]_MCRS/ **VIN[1]A_FLD**/ VIN[1]A_DE/ SPI[3]_D[0]/ UART3_CTS/ GP2[30]	AA23	I	IPD DVDD	VOUT[1], EMAC[1], VIN[1]A, SPI[3], UART3, GP2 PINCNTL206 DSIS: 0	Video Input 1 Port A Field ID input. Discrete field identification signal for Port A YCbCr capture modes without embedded syncs (“BT.601” modes).

Copyright © 2011–2013, Texas Instruments Incorporated

3.2.23 Video Output (Digital)

Table 3-45. Video Output 0 (Digital) Terminal Functions

SIGNAL NAME	NO.	TYPE(1)	OTHER(2)(3)	MUXED	DESCRIPTION
Video Output 0					
VOUT[0]_CLK	AD12	O	IPD DVDD	– PINCNTL176	Video Output Clock output.
VOUT[0]_G_Y_YC[9]	AF14	O	IPD DVDD	– PINCNTL195	Video Output Data. These signals represent the 8 MSBs of G/Y/YC video data. For RGB mode they are green data bits, for YUV444 mode they are Y data bits, for Y/C mode they are Y (Luma) data bits and for BT.656 mode they are multiplexed Y/Cb/Cr (Luma and Chroma) data bits.
VOUT[0]_G_Y_YC[8]	AE14	O	IPD DVDD	– PINCNTL194	
VOUT[0]_G_Y_YC[7]	AD14	O	IPD DVDD	– PINCNTL193	
VOUT[0]_G_Y_YC[6]	AA8	O	IPD DVDD	– PINCNTL192	
VOUT[0]_G_Y_YC[5]	AB12	O	IPD DVDD	– PINCNTL191	
VOUT[0]_G_Y_YC[4]	AB8	O	IPD DVDD	– PINCNTL190	
VOUT[0]_G_Y_YC[3]/ GP2[25]	AH15	O	IPD DVDD	GP2 PINCNTL189 DSIS: PIN	
VOUT[0]_G_Y_YC[2]/ EMU3/ GP2[24]	AH7	O	IPD DVDD	EMU, GP2 PINCNTL188 DSIS: PIN	
VOUT[0]_B_CB_C[9]	AG15	O	IPD DVDD	– PINCNTL187	Video Output Data. These signals represent the 8 MSBs of B/CB/C video data. For RGB mode they are blue data bits, for YUV444 mode they are Cb (Chroma) data bits, for Y/C mode they are multiplexed Cb/Cr (Chroma) data bits and for BT.656 mode they are unused.
VOUT[0]_B_CB_C[8]	AF15	O	IPD DVDD	– PINCNTL186	
VOUT[0]_B_CB_C[7]	AB10	O	IPD DVDD	– PINCNTL185	
VOUT[0]_B_CB_C[6]	AC10	O	IPD DVDD	– PINCNTL184	
VOUT[0]_B_CB_C[5]	AD15	O	IPD DVDD	– PINCNTL183	
VOUT[0]_B_CB_C[4]	AD11	O	IPD DVDD	– PINCNTL182	
VOUT[0]_B_CB_C[3]/ GP2[23]	AE15	O	IPD DVDD	GP2 PINCNTL181 DSIS: PIN	
VOUT[0]_B_CB_C[2]/ EMU2/ GP2[22]	AG7	O	IPD DVDD	EMU2, GP2 PINCNTL180 DSIS: PIN	

(1) I = Input, O = Output, Z = High impedance, S = Supply voltage, GND = Ground, A = Analog signal, MM = Multi Muxed, DSIS = De-selected Input State
(2) IPD = Internal Pulldown Active, IPU = Internal Pullup Active, DIS = Internal Pull Disabled. This represents the default state of the Internal Pull after Reset. For more detailed information on pullup/pulldown resistors and situations where external pullup/pulldown resistors are required, see Section 4.5.1, *Pullup/Pulldown Resistors* and Section 7.3.17, *Pin Behaviors at Reset*.
(3) Specifies the operating I/O supply voltage for each signal

Copyright © 2011–2013, Texas Instruments Incorporated

Table 3-45. Video Output 0 (Digital) Terminal Functions (continued)

SIGNAL NAME	NO.	TYPE(1)	OTHER(2)(3)	MUXED	DESCRIPTION
VOUT[0]_R_CR[9]/	AC13	O	IPD DVDD	– PINCNTL203	Video Output Data. These signals represent the 8 MSBs of R/CR video data. For RGB mode they are red data bits, for YUV444 mode they are Cr (Chroma) data bits, for Y/C mode and BT.656 modes they are unused.
VOUT[0]_R_CR[8]/	AE8	O	IPD DVDD	– PINCNTL202	
VOUT[0]_R_CR[7]/	AF12	O	IPD DVDD	– PINCNTL201	
VOUT[0]_R_CR[6]/	AF6	O	IPD DVDD	– PINCNTL200	
VOUT[0]_R_CR[5]/	AF8	O	IPD DVDD	– PINCNTL199	
VOUT[0]_R_CR[4]/	AA9	O	IPD DVDD	– PINCNTL198	
VOUT[0]_R_CR[3]/ GP2[27]	AB9	O	IPD DVDD	GP2 PINCNTL197 DSIS: PIN	
VOUT[0]_R_CR[2]/ EMU4/ GP2[26]	AD9	O	IPD DVDD	EMU4, GP2 PINCNTL196 DSIS: PIN	
VOUT[0]_VSYNC	AB13	O	IPD DVDD	– PINCNTL178	Video Output Vertical Sync output. This is the discrete vertical synchronization output. This signal is not used for embedded sync modes.
VOUT[0]_HSYNC	AC11	O	IPD DVDD	– PINCNTL177	Video Output Horizontal Sync output. This is the discrete horizontal synchronization output. This signal is not used for embedded sync modes.
VOUT[0]_FLD/ CAM_PCLK/ GPMC_A[12]/ UART2_RTS/ GP2[2]	AF18	O	IPD DVDD_C	CAMERA_I/F, GPMC, UART2, GP2 PINCNTL175 DSIS: N/A MM: MUX1	Video Output Field ID output. This is the discrete field identification output. This signal is not used for embedded sync modes.
VOUT[0]_AVID/ **VOUT[0]_FLD**/ SPI[3]_SCLK/ TIM7_IO/ GP2[21]	AA10	O	IPD DVDD	VOUT[0], SPI[3], TIMER7, GP2 PINCNTL179 DSIS: N/A MM: MUX0	
VOUT[0]_AVID/ VOUT[0]_FLD/ SPI[3]_SCLK/ TIM7_IO/ GP2[21]	AA10	O	IPD DVDD	VOUT[0], SPI[3], TIMER7, GP2 PINCNTL179 DSIS: N/A	Video Output Active Video output. This is the discrete active video indicator output. This signal is not used for embedded sync modes.

Copyright © 2011–2013, Texas Instruments Incorporated

Table 3-46. Video Output 1 Terminal Functions

SIGNAL NAME	NO.	TYPE(1)	OTHER(2) (3)	MUXED	DESCRIPTION
Video Output 1					
VOUT[1]_CLK/ EMAC[1]_MTCLK/ VIN[1]A_HSYNC/ GP2[28]	AE24	O	IPD DVDD	EMAC[1], VIN[1]A, GP2 PINCNTL204 DSIS: N/A	Video Output Clock output
VOUT[1]_G_Y_YC[9]/ EMAC[1]_MTXD[2]/ VIN[1]A_D[14]/ GP3[13]	AD26	O	IPD DVDD	EMAC[1], VIN[1]A, GP3 PINCNTL221 DSIS: N/A	Video Output Data. These signals represent the 8 MSBs of G/Y/YC video data. For RGB mode they are green data bits, for YUV444 mode they are Y data bits, for Y/C mode they are Y (Luma) data bits and for BT.656 mode they are multiplexed Y/Cb/Cr (Luma and Chroma) data bits.
VOUT[1]_G_Y_YC[8]/ EMAC[1]_MTXD[1]/ VIN[1]A_D[13]/ GP3[12]	AE26	O	IPD DVDD	EMAC[1], VIN[1]A, GP3 PINCNTL220 DSIS: N/A	
VOUT[1]_G_Y_YC[7]/ EMAC[1]_MTXD[0]/ VIN[1]A_D[12]/ GP3[11]	AF26	O	IPD DVDD	EMAC[1], VIN[1]A, GP3 PINCNTL219 DSIS: N/A	
VOUT[1]_G_Y_YC[6]/ EMAC[1]_GMTCLK/ VIN[1]A_D[11]/ GP3[10]	AH27	O	IPD DVDD	EMAC[1], VIN[1]A, GP3 PINCNTL218 DSIS: N/A	
VOUT[1]_G_Y_YC[5]/ EMAC[1]_MRXDV/ VIN[1]A_D[10]/ GP3[9]	AG26	O	IPD DVDD	EMAC[1], VIN[1]A, GP3 PINCNTL217 DSIS: N/A	Video Output Data. These signals represent the 8 MSBs of G/Y/YC video data. For RGB mode they are green data bits, for YUV444 mode they are Y data bits, for Y/C mode they are Y (Luma) data bits and for BT.656 mode they are multiplexed Y/Cb/Cr (Luma and Chroma) data bits.
VOUT[1]_G_Y_YC[4]/ EMAC[1]_MRXD[7]/ VIN[1]A_D[9]/ GP3[8]	W22	O	IPD DVDD	EMAC[1], VIN[1]A, GP3 PINCNTL216 DSIS: N/A	
VOUT[1]_G_Y_YC[3] EMAC[1]_MRXD[6]/ VIN[1]A_D[8]/ GP3[7]	Y23	O	IPD DVDD	EMAC[1], VIN[1]A, GP3 PINCNTL215 DSIS: N/A	
VOUT[1]_G_Y_YC[2]/ GPMC_A[13]/ VIN[1]A_D[21]/ HDMI_SCL/ SPI[2]_SCS[2]/ I2C[2]_SCL/ GP3[20]	AF27	O	IPU DVDD	GPMC, VIN[1]A, HDMI, SPI[2], I2C[2], GP3 PINCNTL228 DSIS: N/A	
VOUT[1]_G_Y_YC[1]/ CAM_D[3]/ GPMC_A[5]/ UART4_RXD/ GP0[22]	AD18	O	IPU DVDD_C	CAMERA_I/F, GPMC, UART4, GP0 PINCNTL168 DSIS: N/A	Video Output Data. These signals represent the 2 LSBs of G/Y/YC video data for 10-bit, 20-bit, and 30-bit video modes (VOUT[1] only). For RGB mode they are green data bits, for YUV444 mode they are Y data bits, for Y/C mode they are Y (Luma) data bits and for BT-656 mode they are multiplexed Y/Cb/Cr (Luma and Chroma) data bits. These signals are not used in 8/16/24-bit modes.
VOUT[1]_G_Y_YC[0]/ CAM_D[2]/ GPMC_A[6]/ UART4_TXD/ GP0[23]	AC18	O	IPD DVDD_C	CAMERA_I/F, GPMC, UART4, GP0 PINCNTL169 DSIS: N/A	

(1) I = Input, O = Output, Z = High impedance, S = Supply voltage, GND = Ground, A = Analog signal, MM = Multi Muxed, DSIS = De-selected Input State
(2) IPD = Internal Pulldown Active, IPU = Internal Pullup Active, DIS = Internal Pull Disabled. This represents the default state of the Internal Pull after Reset. For more detailed information on pullup/pulldown resistors and situations where external pullup/pulldown resistors are required, see Section 4.5.1, *Pullup/Pulldown Resistors* and Section 7.3.17, *Pin Behaviors at Reset*.
(3) Specifies the operating I/O supply voltage for each signal

Copyright © 2011–2013, Texas Instruments Incorporated

Table 3-46. Video Output 1 Terminal Functions (continued)

SIGNAL NAME	NO.	TYPE(1)	OTHER(2)(3)	MUXED	DESCRIPTION
VOUT[1]_B_CB_C[9]/ EMAC[1]_MRXD[5]/ VIN[1]A_D[6]/ I2C[3]_SDA/ GP3[6]	AA24	O	IPD DVDD	EMAC[1], VIN[1]A, I2C[3], GP3 PINCNTL214 DSIS: N/A	Video Output Data. These signals represent the 8 MSBs of B/CB/C video data. For RGB mode they are blue data bits, for YUV444 mode they are Cb (Chroma) data bits, for Y/C mode they are multiplexed Cb/Cr (Luma) data bits, and for BT.656 mode they are not used.
VOUT[1]_B_CB_C[8]/ EMAC[1]_MRXD[4]/ VIN[1]A_D[5]/ I2C[3]_SCL/ GP3[5]	AH26	O	IPD DVDD	EMAC[1], VIN[1]A, I2C[3], GP3 PINCNTL213 DSIS: N/A	
VOUT[1]_B_CB_C[7]/ EMAC[1]_MRXD[3]/ VIN[1]A_D[4]/ UART3_TXD/ GP3[4]	AC25	O	IPD DVDD	EMAC[1], VIN[1]A, UART3, GP3 PINCNTL212 DSIS: N/A	
VOUT[1]_B_CB_C[6]/ EMAC[1]_MRXD[2]/ VIN[1]A_D[3]/ UART3_RXD/ GP3[3]	AD25	O	IPD DVDD	EMAC[1], VIN[1]A, UART3, GP3 PINCNTL211 DSIS: N/A	
VOUT[1]_B_CB_C[5]/ EMAC[1]_MRXD[1]/ VIN[1]A_D[2]/ UART4_TXD/ GP3[2]	AF25	O	IPD DVDD	EMAC[1], VIN[1]A, UART4, GP3 PINCNTL210 DSIS: N/A	Video Output Data. These signals represent the 8 MSBs of B/CB/C video data. For RGB mode they are blue data bits, for YUV444 mode they are Cb (Chroma) data bits, for Y/C mode they are multiplexed Cb/Cr (Luma) data bits, and for BT.656 mode they are not used.
VOUT[1]_B_CB_C[4]/ EMAC[1]_MRXD[0]/ VIN[1]A_D[1]/ UART4_RXD/ GP3[1]	AG25	O	IPD DVDD	EMAC[1], VIN[1]A, UART4, GP3 PINCNTL209 DSIS: N/A	
VOUT[1]_B_CB_C[3]/ EMAC[1]_MRCLK/ VIN[1]A_D[0]/ UART4_CTS/ GP3[0]	AH25	O	IPD DVDD	EMAC[1], VIN[1]A, UART4, GP3 PINCNTL208 DSIS: N/A	
VOUT[1]_B_CB_C[2]/ GPMC_A[0]/ VIN[1]A_D[7]/ HDMI_CEC/ SPI[2]_D[0]/ GP3[30]	AF28	O	IPU DVDD	GPMC, VIN[1]A, HDMI, SPI[2], GP3 PINCNTL231 DSIS: N/A	
VOUT[1]_B_CB_C[1]/ CAM_HS/ GPMC_A[9]/ UART2_RXD/ GP0[26]	AE23	O	IPD DVDD_C	CAMERA_I/F, GPMC, UART2, GP0 PINCNTL172 DSIS: N/A	Video Output Data. These signals represent the 2 LSBs of B/CB/C video data for 20-bit, and 30-bit video modes. For RGB mode they are blue data bits, for YUV444 mode they are Cb (Chroma) data bits, for Y/C mode they are multiplexed Cb/Cr (Chroma) data bits and for BT.656 mode they are unused. These signals are not used in 16/24-bit modes.
VOUT[1]_B_CB_C[0]/ CAM_VS/ GPMC_A[10]/ UART2_TXD/ GP0[27]	AD23	O	IPU DVDD_C	CAMERA_I/F, GPMC, UART2, GP0 PINCNTL173 DSIS: N/A	

Copyright © 2011–2013, Texas Instruments Incorporated

Table 3-46. Video Output 1 Terminal Functions (continued)

SIGNAL NAME	NO.	TYPE(1)	OTHER(2)(3)	MUXED	DESCRIPTION
VOUT[1]_R_CR[9]/ EMAC[1]_MTXEN/ VIN[1]A_D[20]/ UART5_TXD/ GP3[19]	Y24	O	IPD DVDD	EMAC[1], VIN[1]A, UART5, GP3 PINCNTL227 DSIS: N/A	Video Output Data. These signals represent the 8 MSBs of R/CR video data. For RGB mode they are red data bits, for YUV444 mode they are Cr (Chroma) data bits, for Y/C mode and BT.656 mode they are not used.
VOUT[1]_R_CR[8]/ EMAC[1]_MTXD[7]/ VIN[1]A_D[19]/ UART5_RXD/ GP3[18]	W23	O	IPD DVDD	EMAC[1], VIN[1]A, UART5, GP3 PINCNTL226 DSIS: N/A	
VOUT[1]_R_CR[7]/ EMAC[1]_MTXD[6]/ VIN[1]A_D[18]/ SPI[3]_D[0]/ GP3[17]	V22	O	IPD DVDD	EMAC[1], VIN[1]A, SPI[3], GP3 PINCNTL225 DSIS: N/A	
VOUT[1]_R_CR[6]/ EMAC[1]_MTXD[5]/ VIN[1]A_D[17]/ SPI[3]_D[1]/ GP3[16]	AA25	O	IPD DVDD	EMAC[1], VIN[1]A, SPI[3], GP3 PINCNTL224 DSIS: N/A	
VOUT[1]_R_CR[5]/ EMAC[1]_MTXD[4]/ VIN[1]A_D[16]/ SPI[3]_SCLK/ GP3[15]	AC26	O	IPD DVDD	EMAC[1], VIN[1]A, SPI[3], GP3 PINCNTL223 DSIS: N/A	Video Output Data. These signals represent the 8 MSBs of R/CR video data. For RGB mode they are red data bits, for YUV444 mode they are Cr (Chroma) data bits, for Y/C mode and BT.656 mode they are not used.
VOUT[1]_R_CR[4]/ EMAC[1]_MTXD[3]/ VIN[1]A_D[15]/ SPI[3]_SCS[1]/ GP3[14]	AG27	O	IPD DVDD	EMAC[1], VIN[1]A, SPI[3], GP3 PINCNTL222 DSIS: N/A	
VOUT[1]_R_CR[3]/ GPMC_A[14]/ VIN[1]A_D[22]/ HDMI_SDA/ SPI[2]_SCLK/ I2C[2]_SDA/ GP3[21]	AG28	O	IPU DVDD	GPMC, VIN[1]A, HDMI, SPI[2], I2C[2], GP3 PINCNTL229 DSIS: N/A	
VOUT[1]_R_CR[2]/ GPMC_A[15]/ VIN[1]A_D[23]/ HDMI_HPDET/ SPI[2]_D[1]/ GP3[22]	AE27	O	IPU DVDD	GPMC, VIN[1]A, HDMI, SPI[2], I2C[2], GP3 PINCNTL230 DSIS: N/A	
VOUT[1]_R_CR[1]/ CAM_D[1]/ GPMC_A[7]/ UART4_CTS/ GP0[24]	AC19	O	IPD DVDD_C	CAMERA_I/F, GPMC, UART4, GP0 PINCNTL170 DSIS: N/A	Video Output Data. These signals represent the 2 LSBs of R/CR video data for 30-bit video modes. For RGB mode they are red data bits, for YUV444 mode they are Cr (Chroma) data bits, for Y/C mode and BT.656 modes they are not used. These signals are not used in 24-bit mode.
VOUT[1]_R_CR[0]/ CAM_D[0]/ GPMC_A[8]/ UART4_RTS/ GP0[25]	AA22	O	IPD DVDD_C	CAMERA_I/F, GPMC, UART4, GP0 PINCNTL171 DSIS: N/A	
VOUT[1]_VSYNC/ EMAC[1]_MCRS/ VIN[1]A_FLD/ VIN[1]A_DE/ SPI[3]_D[0]/ UART3_CTS/ GP2[30]	AA23	O	IPD DVDD	EMAC[1], VIN[1]A, SPI[3], UART3, GP2 PINCNTL206 DSIS: N/A	Video Output Vertical Sync output. This is the discrete vertical synchronization output. This signal is not used for embedded sync modes

Table 3-46. Video Output 1 Terminal Functions (continued)

SIGNAL NAME	NO.	TYPE(1)	OTHER(2)(3)	MUXED	DESCRIPTION
VOUT[1]_HSYNC/ EMAC[1]_MCOL/ VIN[1]A_VSYNC/ SPI[3]_D[1]/ UART3_RTS/ GP2[29]	AC24	O	IPD DVDD	EMAC[1], VIN[1]A, SPI[3], UART3, GP2 PINCNTL205 DSIS: N/A	Video Output Horizontal Sync output. This is the discrete horizontal synchronization output. This signal is not used for embedded sync modes.
VOUT[1]_FLD/ CAM_FLD/ CAM_WE/ GPMC_A[11]/ UART2_CTS/ GP0[28]	AB23	O	IPD DVDD_C	CAMERA_I/F, GPMC, UART2, GP0 PINCNTL174 DSIS: N/A	Video Output Field ID output. This is the discrete field identification output. This signal is not used for embedded sync modes.
VOUT[1]_AVID/ EMAC[1]_MRXER/ VIN[1]A_CLK/ UART4_RTS/ TIM6_IO/ GP2[31]	Y22	O	IPD DVDD	EMAC[1], VIN[1]A, UART4, TIMER6, GP2 PINCNTL207 DSIS: N/A	Video Output Active Video output. This is the discrete active video indicator output. This signal is not used for embedded sync modes.

Copyright © 2011–2013, Texas Instruments Incorporated

3.2.24 Video Output (Analog, TV)

Table 3-47. Video Outupt (Analog, TV) Terminal Functions

SIGNAL NAME	SIGNAL NO.	TYPE[1]	OTHER[2] [3]	DESCRIPTION
VIDEO INTERFACES (TV)				
TV_OUT0	AH24	O	VDDA_VDAC_1P8	Composite/S-Video (Luminance) Amplifier Output. In **Normal mode** (internal amplifier used), this pin drives the 75-Ω TV load. An external resistor (Rout) should be connected between this pin and the TV_VFB0 pin and be placed as close to the pins as possible. The nominal value of Rout is 2700 Ω. In **TVOUT Bypass mode** (internal amplifier *not* used), this pin is *not* used. When this pin is not used or the TV output is powered-down, this pin should be left unconnected.
TV_OUT1	AH22	O	VDDA_VDAC_1P8	S-Video (Chrominance) Amplifier Output. In **Normal mode** (internal amplifier used), this pin drives the 75-Ω TV load. An external resistor (Rout) should be connected between this pin and the TV_VFB1 pin and be placed as close to the pins as possible. The nominal value of Rout is 2700 Ω. In **TVOUT Bypass mode** (internal amplifier *not* used), this pin is *not* used. When this pin is not used or the TV output is powered-down, this pin should be left unconnected.
TV_VFB0	AG23	A O	VDDA_VDAC_1P8	Composite/S-Video (Luminance) Feedback. In **Normal mode** (internal amplifier used), this pin acts as the buffer feedback node. An external resistor (Rout) should be connected between this pin and the TV_OUT0 pin. In **TVOUT Bypass mode** (internal amplifier *not* used), this pin acts as the direct Video DAC output and should be connected to ground through a load resistor (Rload) and to an external video amplifier. The nominal value of Rload is 1500 Ω. When this pin is **not used** or the TV output is powered-down, this pin should be left unconnected.
TV_VFB1	AG22	A O	VDDA_VDAC_1P8	S-Video (Chrominance) Feedback. In **Normal mode** (internal amplifier used), this pin acts as the buffer feedback node. An external resistor (Rout) should be connected between this pin and the TV_OUT1 pin. In **TVOUT Bypass mode** (internal amplifier not used), it acts as the direct Video DAC output and should be connected to ground through a load resistor (Rload) and to an external video amplifier. The nominal value of Rload is 1500 Ω. When this pin is **not used** or the TV output is powered-down, this pin should be left unconnected.

(1) I = Input, O = Output, Z = High impedance, S = Supply voltage, GND = Ground, A = Analog signal, MM = Multi Muxed, DSIS = De-selected Input State
(2) IPD = Internal Pulldown Active, IPU = Internal Pullup Active, DIS = Internal Pull Disabled. This represents the default state of the Internal Pull after Reset. For more detailed information on pullup/pulldown resistors and situations where external pullup/pulldown resistors are required, see Section 4.5.1, *Pullup/Pulldown Resistors* and Section 7.3.17, *Pin Behaviors at Reset*.
(3) Specifies the operating I/O supply voltage for each signal

Copyright © 2011–2013, Texas Instruments Incorporated

Table 3-47. Video Outupt (Analog, TV) Terminal Functions (continued)

SIGNAL NAME	SIGNAL NO.	TYPE(1)	OTHER(2) (3)	DESCRIPTION
TV_RSET	AH23	A	_ VDDA_VDAC_1P8	TV Input Reference Current Setting. An external resistor (Rset) should be connected between this pin and VSSA_VDAC to set the reference current of the video DAC. The value of the resistor depends on the mode of operation. In **Normal mode** (internal amplifier used), the nominal value for Rset is 4700 Ω. In **TVOUT Bypass mode** (internal amplifier *not* used), the nominal value for Rset is 10000 Ω. When the TV output is **not used**, this pin should be connected to ground (VSS).

Copyright © 2011–2013, Texas Instruments Incorporated

3.2.25 Reserved Pins

Table 3-48. Reserved Terminal Functions

SIGNAL NAME	SIGNAL NO.	TYPE[1]	OTHER	DESCRIPTION
RSV1	AD8	O		Reserved. (Leave unconnected, ***do not*** connect to power or ground.)
RSV2	U8	O		Reserved. (Leave unconnected, ***do not*** connect to power or ground.)
RSV3	V8	O		Reserved. (Leave unconnected, ***do not*** connect to power or ground.)
RSV4	Y14	I		Reserved. (Leave unconnected, ***do not*** connect to power or ground.)
RSV5	AC8	I		
RSV6	L27	I		Reserved. (Leave unconnected, ***do not*** connect to power or ground.)
RSV7	L28	I		
RSV8	M27	I		
RSV9	M28	I		
RSV10	N28	I		
RSV11	N27	I		
RSV12	P28	I		
RSV13	P27	I		
RSV14	R27	I		
RSV15	R28	I		
RSV16	U1	I		Reserved. (Leave unconnected, ***do not*** connect to power or ground.)
RSV17	U2	I		Reserved. (Leave unconnected, ***do not*** connect to power or ground.)

(1) I = Input, O = Output, Z = High impedance, S = Supply voltage, GND = Ground, A = Analog signal, MM = Multi Muxed, DSIS = De-selected Input State

3.2.26 Supply Voltages

Table 3-49. Supply Voltages Terminal Functions

SIGNAL NAME	SIGNAL NO.	TYPE(1)	OTHER	DESCRIPTION
VREFSSTL_DDR[0]	G15	S		Reference Power Supply DDR[0]
VREFSSTL_DDR[1]	G14	S		Reference Power Supply DDR[1]
CVDD	K9, K12, K18, L15, L17, L19, M16, M18, N17, N19, P12, P14, P16, R15, R17, R19, T12, U11, U13, U17, U19, W11	S		Variable Voltage Supply for the CORE_L Core Logic Voltage Domain For actual voltage supply ranges, see Section 6.2, *Recommended Operating Conditions*.
CVDD_ARM	T14, T15, T16, U15, U16, V15, V16	S		Variable Voltage Supply for the ARM_L Core Logic Voltage Domain For actual voltage supply ranges, see Section 6.2, *Recommended Operating Conditions*.
CVDD_DSP	K10, L9, L10, L11, L12, M10, M12, N9	S		Variable Voltage Supply for the DSP_L Core Logic Voltage Domain For actual voltage supply ranges, see Section 6.2, *Recommended Operating Conditions*.
CVDD_HDVICP	L14, M13, M14, N13, N14	S		Variable Voltage Supply for the HDVICP_L Core Logic Voltage Domain For actual voltage supply ranges, see Section 6.2, *Recommended Operating Conditions*.
DVDD	M8, N7, P8, T7, U21, U22, V20,Y11, Y16, AA15, AA17, AB14, AB16	S		3.3 V/1.8 V Power Supply for General I/Os
DVDD_GPMC	K20, L21, M20	S		3.3 V/1.8 V Power Supply for GPMC I/Os (that is, GPMC, SD2, and so forth)
DVDD_GPMCB	P20, T20	S		3.3 V/1.8 V Power Supply for GPMCB I/Os
DVDD_SD	P7, P9	S		3.3 V/1.8 V Power Supply for MMC/SD/SDIO I/Os (specifically, SD0, SD1, and pin W6)
DVDD_DDR[0]	E20, E21, G16, H16, H17, J15, J16, J17, J18	S		1.5 V/1.8 V Power Supply for DDR[0] I/Os
DVDD_DDR[1]	E8, E9, G13, H12, H13, H14, J10, J11, J13	S		1.5 V/1.8 V Power Supply for DDR[1] I/Os
DVDD_M	R10	S		1.8 V Power Supply . For proper device operation, this pin ***must*** always be connected to a 1.8-V Power Supply.
DVDD_C	W19, W20	S		3.3 V/1.8 V Power Supply for Camera I/F I/Os
VDDA_ARMPLL_1P8	R13	S		1.8 V Analog Power Supply for PLL_ARM and PLL_SGX
VDDA_DSPPLL_1P8	P11	S		1.8 V Analog Power Supply for PLL_DSP and PLL_HDVICP
VDDA_VID0PLL_1P8	AB18	S		1.8 V Analog Power Supply for PLL_VIDEO0
VDDA_VID1PLL_1P8	AA18	S		1.8 V Analog Power Supply for PLL_VIDEO1
VDDA_AUDIOPLL_1P8	R18	S		1.8 V Analog Power Supply for PLL_AUDIO
VDDA_DDRPLL_1P8	H15	S		1.8 V Analog Power Supply for PLL_DDR

(1) I = Input, O = Output, Z = High impedance, S = Supply voltage, GND = Ground, A = Analog signal, MM = Multi Muxed, DSIS = De-selected Input State

Copyright © 2011–2013, Texas Instruments Incorporated

Table 3-49. Supply Voltages Terminal Functions (continued)

SIGNAL NAME	SIGNAL NO.	TYPE[1]	OTHER	DESCRIPTION
VDDA_L3PLL_1P8	N18	S		1.8 V Analog Power Supply for PLL_L3, PLL_HDVPSS, and PLL_MEDIACTL
VDDA_PCIE_1P8	W9, W10	S		1.8 V Analog Power Supply for PCIe. For proper device operation, this pin ***must*** always be connected to a 1.8-V Power Supply, even if the PCIe is not being used.
VDDA_SATA_1P8	U9, U10	S		1.8 V Analog Power Supply for SATA. For proper device operation, this pin ***must*** always be connected to a 1.8-V Power Supply, even if the SATA is not being used.
VDDA_HDMI_1P8	W18	S		1.8 V Analog Power Supply for HDMI. For proper device operation, this pin ***must*** always be connected to a 1.8-V Power Supply, even if the HDMI is not being used.
VDDA_USB0_1P8	AA12	S		1.8 V Analog Power Supply for USB0. For proper device operation, this pin ***must*** always be connected to a 1.8-V Power Supply, even if the USB0 is not being used.
VDDA_USB1_1P8	W13	S		1.8 V Analog Power Supply for USB1. For proper device operation, this pin ***must*** always be connected to a 1.8-V Power Supply, even if the USB1 is not being used.
VDDA_VDAC_1P8	AB19	S		1.8 V Reference Power Supply for VDAC. For proper device operation, this pin ***must*** always be connected to a 1.8-V Power Supply, even if the VDAC is not being used.
VDDA_USB_3P3	AA13	S		3.3 V Analog Power Supply for USB0 and USB1. For proper device operation, this pin ***must*** always be connected to a 3.3-V Power Supply, even if USB0 and USB1 are not being used.
VDDA_1P8	L20, M7, M22, R20, U7, V10, W15, Y13	S		1.8 V Power Supply for on-chip LDOs and I/O biasing
LDOCAP_ARM	W14	A		ARM Cortex-A8 VBB LDO output. This pin must always be connected via a 1-uF capacitor to VSS.
LDOCAP_ARMRAM	V14	A		ARM Cortex-A8 RAM LDO output. This pin must always be connected via a 1-uF capacitor to VSS.
LDOCAP_RAM0	P18	A		CORE RAM0 LDO output. This pin must always be connected via a 1-uF capacitor to VSS.
LDOCAP_RAM1	R11	A		CORE RAM1 LDO output. This pin must always be connected via a 1-uF capacitor to VSS.
LDOCAP_RAM2	L18	A		CORE RAM2 LDO output. This pin must always be connected via a 1-uF capacitor to VSS.
LDOCAP_DSP	P10	A		C674x DSP VBB LDO output. This pin must always be connected via a 1-uF capacitor to VSS.
LDOCAP_DSPRAM	M11	A		C674x DSP RAM LDO output. This pin must always be connected via a 1-uF capacitor to VSS.
LDOCAP_HDVICP	N10	A		HDVICP2 VBB LDO output. This pin must always be connected via a 1-uF capacitor to VSS.
LDOCAP_HDVICPRAM	N11	A		HDVICP2 RAM LDO output. This pin must always be connected via a 1-uF capacitor to VSS.
LDOCAP_SGX	T10	A		SGX530 VBB LDO output. This pin must always be connected via a 1-uF capacitor to VSS.
LDOCAP_SERDESCLK	T11	A		SERDES_CLKP/N Pins LDO output. This pin must always be connected via a 1-uF capacitor to VSS.

Copyright © 2011–2013, Texas Instruments Incorporated

3.2.27 Ground Pins (VSS)

Table 3-50. Ground Terminal Functions

SIGNAL NAME	SIGNAL NO.	TYPE(1)	OTHER	DESCRIPTION
VSS	A1, A12, A17, A28, D9, D20, J12, J14, J19, K11, K13, K14, K15, K16, K17, K19, L8, L13, L16, L22, M9, M15, M17, M19, M21, N8, N12, N15, N16, N20, N21, N22, P13, P15, P17, P19, P21, R8, R9, R12, R14, R16, R21, R22, T8, T9, T13, T17, T18, T19, T21, T22, U12, U14, U18, U20, V7, V9, V11, V17, V19, V21, W12, W16, W17, Y1, Y2, Y10, Y12, Y15, Y17, Y18, Y19, AA14, AA16, AD21, AE1, AE2, AE9, AE20, AF23, AG1, AH1, AH28	GND		Ground (GND)
VSSA_VDAC	AA19	GND		Analog GND for VDAC. For proper device operation, this pin *must* always be connected to ground, even if the VDAC is not being used.
VSSA_HDMI	V18	GND		Analog GND for HDMI For proper device operation, this pin *must* always be connected to ground, even if the HDMI is not being used.
VSSA_USB	V12, V13	GND		Analog GND for USB0 and USB1. For proper device operation, this pin *must* always be connected to ground, even if USB0 and USB1 are not being used.
VSSA_DEVOSC	AG3	GND		Ground for Device Oscillator
VSSA_AUXOSC	R2	GND		Ground for Auxiliary Oscillator

(1) I = Input, O = Output, Z = High impedance, S = Supply voltage, GND = Ground, A = Analog signal, MM = Multi Muxed, DSIS = De-selected Input State

Copyright © 2011–2013, Texas Instruments Incorporated

4 Device Configurations

4.1 Control Module Registers

4.2 Boot Modes

The state of the device after boot is determined by sampling the input states of the BTMODE[15:0] pins when device reset ($\overline{\text{POR}}$ or $\overline{\text{RESET}}$) is de-asserted. The sampled values are latched into the CONTROL_STATUS register, which is part of the Control Module. The BTMODE[15:11] values determine the following system boot settings:

- $\overline{\text{RSTOUT_WD_OUT}}$ Control
- GPMC CS0 Default Data Bus Width, Wait Enable, and Address/Data Multiplexing

For additional details on BTMODE[15:11] pin functions, see Table 3-1, *Boot Configuration Terminal Functions*.

The BTMODE[4:0] values determine the boot mode order according to Table 4-1, *Boot Mode Order*. The 1st boot mode listed for each BTMODE[4:0] configuration is executed as the primary boot mode. If the primary boot mode fails, the 2nd, 3rd, and 4th boot modes are executed in that order until a successful boot is completed.

The BTMODE[7:5] pins are RESERVED and should be pulled down as indicated inTable 3-1, *Boot Configuration Terminal Functions*.

When the EMAC bootmode is selected (see Table 4-1), the sampled value from BTMODE[9:8] pins are used to determine the Ethernet PHY Mode selection (see Table 4-7).

When the XIP (MUX0), XIP (MUX1), XIP w/ WAiT (MUX0) or XIP w/ WAiT (MUX1) bootmode is selected (see Table 4-1), the sampled value from BTMODE[10] pin is used to select between GPMC pin muxing options shown in Table 4-2, *XIP (on GPMC) Boot Options [Muxed or Non-Muxed]*.

For more detailed information on booting the device, see the *ROM Code Memory and Peripheral Booting* chapter of the *TMS320DM814x DaVinci Digital Media Processors Technical Reference Manual* (Literature Number: SPRUGZ8).

Table 4-1. Boot Mode Order

BTMODE[4:0]	1st	2nd	3rd	4th
00000	RESERVED	RESERVED	RESERVED	RESERVED
00001	UART	XIP w/WAIT (MUX0)(1)(2)	MMC	SPI
00010	UART	SPI	NAND	NANDI2C
00011	UART	SPI	XIP (MUX0)(1)(2)	MMC
00100	EMAC(3)	SPI	NAND	NANDI2C
00101	RESERVED	RESERVED	RESERVED	RESERVED
00110	RESERVED	RESERVED	RESERVED	RESERVED
00111	EMAC(3)	MMC	SPI	XIP (MUX1)(1)(2)
01000	PCIE_32(4)	RESERVED	RESERVED	RESERVED
01001	PCIE_64(4)	RESERVED	RESERVED	RESERVED
01010	RESERVED	RESERVED	RESERVED	RESERVED
01011	RESERVED	RESERVED	RESERVED	RESERVED
01100	RESERVED	RESERVED	RESERVED	RESERVED
01101	RESERVED	RESERVED	RESERVED	RESERVED
01110	RESERVED	RESERVED	RESERVED	RESERVED
01111	Fast XIP (MUX0)(1)	UART	EMAC(3)	PCIE_64(4)
10000	XIP (MUX1)(1)(2)	UART	EMAC(3)	MMC
10001	XIP w/WAIT (MUX1)(1)(2)	UART	EMAC(3)	MMC
10010	NAND	NANDI2C	SPI	UART
10011	NAND	NANDI2C	MMC	UART
10100	NAND	NANDI2C	SPI	EMAC(3)
10101	NANDI2C	MMC	EMAC(3)	UART
10110	SPI	MMC	UART	EMAC(3)
10111	MMC	SPI	UART	EMAC(3)
11000	SPI	MMC	PCIE_32(4)	RESERVED
11001	SPI	MMC	PCIE_64(4)	RESERVED
11010	XIP (MUX0)(1)(2)	UART	SPI	MMC
11011	XIP w/WAIT (MUX0)(1)(2)	UART	SPI	MMC
11100	RESERVED	RESERVED	RESERVED	RESERVED
11101	RESERVED	RESERVED	RESERVED	RESERVED
11110	RESERVED	RESERVED	RESERVED	RESERVED
11111	Fast XIP (MUX0)(1)	EMAC(3)	UART	PCIE_32(4)

(1) GPMC CS0 eXecute In Place (XIP) boot for NOR/OneNAND/ROM. MUX0/1 refers to the multiplexing option for the GPMC_A[12:0] pins. For more detailed information on booting the device, including which pins are used for each boot mode, see the *ROM Code Memory and Peripheral Booting* chapter of the *TMS320DM814x DaVinci Digital Media Processors Technical Reference Manual* (Literature Number: SPRUGZ8).
(2) When the XIP (MUX0), XIP (MUX1), XIP w/ WAiT (MUX0) or XIP w/ WAiT (MUX1) bootmode is selected, the sampled value from BTMODE[10] pin is used to select between GPMC pin configuration options shown in Table 4-2, *XIP (on GPMC) Boot Options*.
(3) When the EMAC bootmode is selected, the sampled value from BTMODE[9:8] pins are used to determine the Ethernet PHY Mode Selection (see Table 4-7).
(4) When the PCIe bootmode is selected (PCIE_32 or PCI_64), the sampled value from BTMODE[15:12] pins are used to determine the addressing options. For more detailed information on the PCIe addressing options, see the *ROM Code Memory and Peripheral Booting* chapter of the *TMS320DM814x DaVinci Digital Media Processors Technical Reference Manual* (Literature Number: SPRUGZ8).

4.2.1 XIP (NOR) Boot Options

Table 4-2 shows the XIP (NOR) boot mode GPMC pin configuration options (Option A: BTMODE[10] = 0 and Option B: BTMODE[10] = 1). For Option B, the pull state on select pins is reconfigured to IPD and remains IPD after boot until the user software reconfigures it.

Copyright © 2011–2013, Texas Instruments Incorporated

Table 4-2. XIP (on GPMC) Boot Options

SIGNAL NAME	PIN NO.	OTHER CONDITIONS	CONTROLLED I/O FUNCTION DURING XIP (NOR) BOOT			
			BTMODE[10] = 0 [OPTION A]		BTMODE[10] = 1 [OPTION B]	
			PIN FUNCTION	PULL STATE	PIN FUNCTION	PULL STATE
GPMC_CS[0]/*	T28		GPMC_CS[0]	IPU	GPMC_CS[0]	IPU
GPMC_ADV_ALE/*	M26	BTMODE[14:13] = 01b or 10b (Mux)	GPMC_ADV_ALE	IPU	GPMC_ADV_ALE	IPU
		BTMODE[14:13] = 00b (Non-Mux)			Default	
GPMC_OE_RE	T27		GPMC_OE_RE	IPU	GPMC_OE_RE	IPU
GPMC_BE[0]_CLE/GPMC_A[25]/*	U27		GPMC_BE[0]_CLE	IPD	Default	IPD
GPMC_BE[1]/GPMC_A[24]/*	V28		Default	IPD	Default	IPD
GPMC_WE	U28		GPMC_WE	IPU	GPMC_WE	IPU
GPMC_WAIT[0]/GPMC_A[26]/*	W28	BTMODE[15] = 1b (WAIT Used/Enabled)	GPMC_WAIT[0]	IPU	GPMC_WAIT[0]	IPU
		BTMODE[15] = 0b (WAIT Not Used/Disabled)			Default	IPD(1)
GPMC_CLK/*	R26		GPMC_CLK	IPU	Default	IPU
GPMC_D[15:0]/*	Y25,V24,U23,U24,AA27,Y26,AB28,Y27,V25,U25,AA28,V26,W27,V27,Y28,U26		GPMC_D[15:0]	Off	GPMC_D[15:0]	Off
/GPMC_A[27]/GPMC_A[26]/GPMC_A[0]/	J25	BTMODE[12] = 0b (8-bit Mode)	GPMC_A[0]	IPD	GPMC_A[0]	IPD
		BTMODE[12] = 1b (16-bit Mode)			Default	
/GPMC_A[1:12]/ (M0)	T23,H26,F28,G27,K22,K23,J24,H25,H22,H23,G23,F27	XIP_MUX0 Mode	GPMC_A[1:12]	IPD	GPMC_A[1:12]	IPD
		XIP_MUX1 Mode	Default	IPD	Default	IPD
/GPMC_A[1:12]/ (M1)	J28,K27,M24,L26,AD18,AC18,AC19,AA22,AE23,AD23,AB23,AF18	XIP_MUX0 Mode	Default	Default	Default	Default
		XIP_MUX1 Mode	GPMC_A[1:12]	Default	GPMC_A[1:12]	Default
/GPMC_A[13:15]/ (M0)	J22,H24,J23		Default	IPD	Default	IPD
/GPMC_A[0]/ (M1)	AF28	BTMODE[12] = 0b (8-bit Mode)	Default	IPU	Default	IPU
		BTMODE[12] = 1b (16-bit Mode)				
/GPMC_A[13]/ (M1)	AF27	BTMODE[14:13] = 01b or 10b (Mux)	Default	IPU	Default	IPU
		BTMODE[14:13] = 00b (Non-Mux)				IPD(1)
/GPMC_A[14]/ (M1)	AG28	BTMODE[14:13] = 01b or 10b (Mux)	Default	IPU	Default	IPU
		BTMODE[14:13] = 00b (Non-Mux)				IPD(1)
/GPMC_A[15]/ (M1)	AE27		Default	IPD	Default	IPD
GPMC_A[16:19]/*	AD27,V23,AE28,AC27		Default	IPD	Default	IPD
GPMC_A[20] (M0)	AD28		Default	IPU	Default	IPD(1)
GPMC_A[21] (M0)	AC28		Default	IPD	Default	IPD
GPMC_A[22] (M0)	AB27		Default	IPU	Default	IPD(1)
GPMC_A[23] (M0)	AA26		Default	IPD	Default	IPD

(1) After initial power-up the internal pullup (IPU) will be at its default configuration of IPU. During the boot ROM execution, the pull state is reconfigured to IPD and it remains IPD after boot until the user software reconfigures it.

Copyright © 2011–2013, Texas Instruments Incorporated

Table 4-2. XIP (on GPMC) Boot Options (continued)

SIGNAL NAME	PIN NO.	OTHER CONDITIONS	CONTROLLED I/O FUNCTION DURING XIP (NOR) BOOT			
			BTMODE[10] = 0 [OPTION A]		BTMODE[10] = 1 [OPTION B]	
			PIN FUNCTION	PULL STATE	PIN FUNCTION	PULL STATE
/GPMC_A[24]/GPMC_A[20]/	L25		Default	IPU	Default	IPD(1)
/GPMC_A[25]/GPMC_A[21]/	N23		Default	IPU	Default	IPD(1)
/GPMC_A[26]/GPMC_A[22]/	P22		Default	IPU	Default	IPD(1)
/GPMC_A[27]/GPMC_A[23]/	R24		Default	IPU	Default	IPU
GPMC_A[24] (M1)	M25		Default	IPU	Default	IPU
GPMC_A[25] (M1)	K28		Default	IPU	Default	IPU

Copyright © 2011–2013, Texas Instruments Incorporated

4.2.2 NAND Flash Boot

Table 4-3 lists the device pins that are configured by the ROM for the NAND Flash boot mode.

NOTE: Table 4-3 lists the configuration of the GPMC_CLK pin (pin mux and pull state) in NAND bootmodes.

The NAND flash memory is not XIP and requires shadowing before the code can be executed.

Table 4-3. Pins Used in NAND FLASH Bootmode

SIGNAL NAME	PIN NO.	TYPE	OTHER CONDITIONS
$\overline{\text{GPMC_CS[0]}}$/*	T28	O	BTMODE[12] = 0b (8-bit Mode) BTMODE[12] = 1b (16-bit Mode) BTMODE[14:13] = 00b (GPMC CS0 not muxed) BTMODE[15] = 0b (wait disabled)
GPMC_$\overline{\text{ADV}}$_ALE/*	M26	O	
$\overline{\text{GPMC_OE_RE}}$	T27	O	
GPMC_$\overline{\text{BE[0]}}$_CLE/GPMC_A[25]/*	U27	O	
GPMC_$\overline{\text{BE[1]}}$/GPMC_A[24]/*	V28	O	
$\overline{\text{GPMC_WE}}$	U28	O	
GPMC_WAIT[0]/GPMC_A[26]/*(1)	W28	I	
GPMC_CLK/*	R26	O	
GPMC_D[15:0]/*	Y25,V24,U23,U24, AA27,Y26,AB28,Y27, V25,U25,AA28,V26,W27,V27,Y28,U26	I/O	

(1) GPMC_CLK/* is not configured in BTMODE[10] = 1 [OPTION B]

4.2.3 NAND I2C Boot (I2C EEPROM)

Table 4-4 lists the device pins that are configured by the ROM for the NAND I2C boot mode.

Table 4-4. Pins Used in NAND I2C Bootmode

SIGNAL NAME	PIN NO.	TYPE
I2C[0]_SCL	AC4	I/O
I2C[0]_SDA	AB6	I/O

4.2.4 MMC/SD Cards Boot

Table 4-5 lists the device pins that are configured by the ROM for the MMC/SD boot mode.

Table 4-5. Pins Used in MMC/SD Bootmode

SIGNAL NAME	PIN NO.	TYPE
SD1_CLK	P3	O
SD1_CMD/GP0[0] [MUX0]	P2	O
SD1_DAT[0]	P1	I/O
SD1_DAT[1]_$\overline{\text{SDIRQ}}$	P5	I/O
SD_DAT[2]_SDR$\overline{\text{W}}$	P4	I/O
SD1_DAT[3]	P6	I/O

Copyright © 2011–2013, Texas Instruments Incorporated

4.2.5 SPI Boot

Table 4-6 lists the device pins that are configured by the ROM for the SPI boot mode.

Table 4-6. Pins Used in SPI Bootmode

SIGNAL NAME	PIN NO.	TYPE
$\overline{\text{SPI[0]_SCS[0]}}$	AD6	I/O
SPI[0]_D[0] (MISO)	AE3	I/O
SPI[0]_D[1] (MOSI)	AF3	I/O
SPI[0]_SCLK	AC7	I/O

4.2.6 Ethernet PHY Mode Selection

When the EMAC bootmode is selected, via the BTMODE[4:0] pins (see Table 4-1), Table 4-7 shows the sampled value of BTMODE[9:8] pins and the Ethernet PHY Mode selection.

Table 4-8 shows the signal names (pin functions) and the associated pin numbers selected in each particular EMAC mode.

Table 4-7. EMAC PHY Mode Selection

BTMODE[9:8]	ETHERNET PHY MODE SELECTION
00b	MII
01b	RMII
10b	RGMII
11b	RESERVED

Table 4-8. Pins Used in EMAC[0] MII/GMII, RGMII, and RMII Boot Modes

PIN NO.	SIGNAL NAMES					
	MII/GMII	TYPE	RGMII	TYPE	RMII	TYPE
J27	DEFAULT		DEFAULT		EMAC_RMREFCLK	Output only
L23	EMAC[0]_MCOL	I	EMAC[0]_RGRXCTL	I	EMAC[0]_RMRXD[0]	I
R25	EMAC[0]_MCRS	I	EMAC[0]_RGRXD[2]	I	EMAC[0]_RMRXD[1]	I
K23	EMAC[0]_GMTCLK	O	DEFAULT		DEFAULT	
H27	EMAC[0]_MRCLK	I	EMAC[0]_RGTXC	O	EMC[0]_RMCRSDV	I
G28	EMAC[0]_MRXD[0]	I	EMAC[0]_RGTXD[0]	O	EMAC[0]_RMTXD[0]	O
P23	EMAC[0]_MRXD[1]	I	EMAC[0]_RGRXD[0]	I	EMAC[0]_RMTXD[1]	O
R23	EMAC[0]_MRXD[2]	I	EMAC[0]_RGRXD[1]	I	EMAC[0]_RMTXEN	O
J25	EMAC[0]_MRXD[3]	I	DEFAULT		DEFAULT	
T23	EMAC[0]_MRXD[4]	I	EMAC[0]_RGRXD[3]	I	DEFAULT	
H26	EMAC[0]_MRXD[5]	I	EMAC[0]_RGTXD[3]	O	DEFAULT	
F28	EMAC[0]_MRXD[6]	I	EMAC[0]_RGTXD[2]	O	DEFAULT	
G27	EMAC[0]_MRXD[7]	I	EMAC[0]_RGTXD[1]	O	DEFAULT	
K22	EMAC[0]_MRXDV	I	DEFAULT		DEFAULT	
J26	EMAC[0]_MRXER	I	EMAC[0]_RGTXCTL	O	EMAC[0]_RMRXER	I
L24	EMAC[0]_MTCLK	I	EMAC[0]_RGRXC	I	DEFAULT	
J24	EMAC[0]_MTXD[0]	O	DEFAULT		DEFAULT	
H25	EMAC[0]_MTXD[1]	O	DEFAULT		DEFAULT	
H22	EMAC[0]_MTXD[2]	O	DEFAULT		DEFAULT	

Copyright © 2011–2013, Texas Instruments Incorporated

Table 4-8. Pins Used in EMAC[0] MII/GMII, RGMII, and RMII Boot Modes (continued)

PIN NO.	SIGNAL NAMES					
	MII/GMII	TYPE	RGMII	TYPE	RMII	TYPE
H23	EMAC[0]_MTXD[3]	O	DEFAULT		DEFAULT	
G23	EMAC[0]_MTXD[4]	O	DEFAULT		DEFAULT	
F27	EMAC[0]_MTXD[5]	O	DEFAULT		DEFAULT	
J22	EMAC[0]_MTXD[6]	O	DEFAULT		DEFAULT	
H24	EMAC[0]_MTXD[7]	O	DEFAULT		DEFAULT	
J23	EMAC[0]_MTXEN	O	DEFAULT		DEFAULT	
H28	MDCLK	O	MDCLK	O	MDCLK	O
P24	MDIO	I/O	MDIO	I/O	MDIO	I/O

4.2.7 PCIe Bootmode (PCIE_32 and PCIE_64)

Table 4-9 lists the device pins that are configured by the ROM for the PCIe boot mode.

Table 4-9. Pins Used in PCIe Bootmode

SIGNAL NAME	PIN NO.	TYPE
PCIE_TXP0	AD2	O
PCIE_TXN0	AD1	O
PCIE_RXP0	AC2	I
PCIE_RXN0	AC1	I
SERDES_CLKIP	AF1	I
SERDES_CLKN	AF2	I

4.2.8 UART Bootmode

Table 4-10 lists the device pins that are configured by the ROM for the UART boot mode.

Table 4-10. Pins Used in UART Bootmode

SIGNAL NAME	PIN NO.	TYPE
UART0_RXD	AH5	I
UART0_TXD	AG5	O

4.3 Pin Multiplexing Control

Device level pin multiplexing is controlled on a pin-by-pin basis by the MUXMODE bits of the PINCNTL1 – PINCNTL270 registers in the Control Module.

Pin multiplexing selects which one of several peripheral pin functions controls the pin's I/O buffer output data values. Table 4-11 shows the peripheral pin functions associated with each MUXMODE setting for all multiplexed pins. The default pin multiplexing control for almost every pin is to select MUXMODE = 0x0, in which case the pin's I/O buffer is 3-stated.

In most cases, the input from each pin is routed to all of the peripherals that share the pin, regardless of the MUXMODE setting. However, in some cases a constant "0" or "1" value is routed to the associated peripheral when its peripheral function is not selected to control any output pin. For more details on the De-Selected Input State (DSIS), see the "MUXED" columns of each Terminal Functions table (Section 3.2, *Terminal Functions*).

Some peripheral pin functions can be routed to more than one device pin. These types of peripheral pin functions are called Multimuxed (MM) and may have different Switching Characteristics and Timing Requirements for each device pin option. The Multimuxed peripheral pin functions are labeled as "MM" in Terminal Functions tables in Section 3.2, *Terminal Functions* and the associated timings for each MM pin option are in Section 8, *Peripheral Information and Timings*.

For more detailed information on the Pin Control 1 through Pin Control 270 (PINCNTLx) registers breakout, see Figure 4-1 and Table 4-11. For the register reset values of each PINCNTLx register, see Table 4-13, *PINCNTLx Registers MUXMODE Functions*.

Figure 4-1. PINCNTL1 – PINCNTL270 (PINCNTLx) Registers Breakout

31–24	23–20	19	18	17	16
RESERVED	RESERVED	RSV	RXACTIVE	PLLTYPESEL	PLLUDEN
R - 0000 0000	R - 0000	R/W (see Table 4-13 for register reset value)			

15–8	7–0
RESERVED	MUXMODE[7:0] (see Table 4-13)
R - 0000 0000	R/W - 0000 0000

LEGEND: R/W = Read/Write; R = Read only; -*n* = value after reset

Table 4-11. PINCNTL1 – PINCNTL270 (PINCNTLx) Registers Bit Descriptions

Bit	Field	Description	Comments
31:20	RESERVED	Reserved. Read only, writes have no effect.	For PINCNTLx register reset value examples, see Table 4-12, *PNICNTLx Register Reset Value Examples*. For the full register reset values of all PINCNTLx registers, see Table 4-13, *PINCNTLx Registers MUXMODE Functions*.
19	RSV	Reserved. This bit ***must*** always be written with the reset (default) value. (See Table 4-13 for full register reset value)	
18	RXACTIVE	Receiver Enable 0 = Receiver Disabled 1 = Receiver Enabled	
17	PLLTYPSEL	Pullup/Pulldown Type Selection bit 0 = Pulldown (PD) selected 1 = Pullup (PU) selected	
16	PLLUDEN	Pullup/Pulldown Enable bit 0 = PU/PD enabled 1 = PU/PD disabled	
15:8	RESERVED	Reserved. Read only, writes have no effect.	
7:0	MUXMODE[7:0]	MUXMODE Selection bits These bits select the multiplexed mode pin function settings (seeTable 4-13, *PINCNTLx Registers MUXMODE Functions*). A value of zero results in the pin being tri-stated. Non-zero values other than those shown in Table 4-13 are Reserved.	

Copyright © 2011–2013, Texas Instruments Incorporated

Table 4-12. PINCNTLx Register Reset Value Examples

HEX ADDRESS RANGE	PINCNTLx REGISTER NAME	Bits 31:24	Bits 23:20	Bit 19	Bit 18	Bit 17	Bit 16	Bits 15:8	Bits 7:0	REGISTER RESET VALUE
		RESERVED	RESERVED	RSV	RSV	PLLTYPESEL	PLLUDEN	RESERVED	MUXMODE[7:0]	
0x4814 0800	PINCNTL1	00h	0h	0	1	1	0	00h	00h	0x0006 0000
0x4814 0804	PINCNTL2	00h	0h	1	1	1	0	00h	00h	0x000E 0000
0x4814 0808	PINCNTL3	00h	0h	1	1	1	0	00h	00h	0x000E 0000
…										
0x4814 0C34	PINCNTL270	00h	0h	1	1	0	0	00h	00h	0x000C 0000

(1) "(M0)" represents multimuxed option "0" for this pin function, "(M1)" represents multimuxed option "1" for this pin function, ... etc.

(2) Within this MUXMODE setting, EMAC[x] GMII or RGMII pin functions are selected via the RGMII0_EN and/or RGMII1_EN bits (8 and 9, respectively) in the GMII_SEL register [0x4814_0650] of the Control Module. "0" = GMII (default) and "1" = RGMII.

Table 4-13. PINCNTLx Registers MUXMODE Functions

HEX ADDRESS	REGISTER NAME	PIN NO.	REGISTER RESET VALUE	MUXMODE[7:0] SETTINGS							
				0x1	0x2	0x4	0x8	0x10	0x20	0x40	0x80
0x4814 0800	PINCNTL1	P3	0x0006 0000	SD1_CLK							
0x4814 0804	PINCNTL2	P2	0x000E 0000	SD1_CMD(M0)							GP0[0]
0x4814 0808	PINCNTL3	P1	0x000E 0000	SD1_DAT[0]							
0x4814 080C	PINCNTL4	P5	0x000E 0000	SD1_DAT[1]_$\overline{\text{SDIRQ}}$							
0x4814 0810	PINCNTL5	P4	0x000E 0000	SD1_DAT[2]_SDR$\overline{\text{W}}$							
0x4814 0814	PINCNTL6	P6	0x000E 0000	SD1_DAT[3]							
0x4814 0818	PINCNTL7	W6	0x000E 0000	DEVOSC_WAKE	$\overline{\text{SPI[1]_SCS[1]}}$					TIM5_IO(M1)	GP1[7](M0)
0x4814 081C	PINCNTL8	Y6	0x0006 0000	SD0_CLK							GP0[1]
0x4814 0820	PINCNTL9	N1	0x000E 0000	SD0_CMD	SD1_CMD(M1)						GP0[2]
0x4814 0824	PINCNTL10	R7	0x000E 0000	SD0_DAT[0]	SD1_DAT[4]						GP0[3]
0x4814 0828	PINCNTL11	Y5	0x000E 0000	SD0_DAT[1]_$\overline{\text{SDIRQ}}$	SD1_DAT[5]						GP0[4]
0x4814 082C	PINCNTL12	Y3	0x000E 0000	SD0_DAT[2]_SDR$\overline{\text{W}}$	SD1_DAT[6]						GP0[5]
0x4814 0830	PINCNTL13	Y4	0x000E 0000	SD0_DAT[3]	SD1_DAT[7]						GP0[6]
0x4814 0834	PINCNTL14	L5	0x000C 0000	AUD_CLKIN0	MCA[0]_AXR[7](M1)	MCA[0]_AHCLKX	MCA[3]_AHCLKX				USB1_DRVVBUS
0x4814 0838	PINCNTL15	R5	0x000C 0000	AUD_CLKIN1	MCA[0]_AXR[8](M1)	MCA[1]_AHCLKX	MCA[4]_AHCLKX		EDMA_EVT3(M1)	TIM2_IO(M1)	GP0[8]
0x4814 083C	PINCNTL16	H1	0x000C 0000	AUD_CLKIN2	MCA[0]_AXR[9](M1)	MCA[2]_AHCLKX	MCA[5]_AHCLKX		EDMA_EVT2(M1)	TIM3_IO(M1)	GP0[9]
0x4814 0840	PINCNTL17	R4	0x0004 0000	MCA[0]_ACLKX							
0x4814 0844	PINCNTL18	L3	0x000C 0000	MCA[0]_AFSX							
0x4814 0848	PINCNTL19	K2	0x0004 0000	MCA[0]_ACLKR	MCA[5]_AXR[2]						
0x4814 084C	PINCNTL20	K1	0x000C 0000	MCA[0]_AFSR	MCA[5]_AXR[3]						

Copyright © 2011–2013, Texas Instruments Incorporated

Table 4-13. PINCNTLx Registers MUXMODE Functions (continued)

HEX ADDRESS	REGISTER NAME	PIN NO.	REGISTER RESET VALUE	MUXMODE[7:0] SETTINGS							
				0x1	0x2	0x4	0x8	0x10	0x20	0x40	0x80
0x4814 0850	PINCNTL21	J2	0x000C 0000	MCA[0]_AXR[0]							
0x4814 0854	PINCNTL22	J1	0x000E 0000	MCA[0]_AXR[1]					I2C[3]_SCL(M0)		
0x4814 0858	PINCNTL23	L4	0x000E 0000	MCA[0]_AXR[2]					I2C[3]_SDA(M0)		
0x4814 085C	PINCNTL24	M5	0x000C 0000	MCA[0]_AXR[3]							
0x4814 0860	PINCNTL25	R6	0x000C 0000	MCA[0]_AXR[4]	MCA[1]_AXR[8](M0)						
0x4814 0864	PINCNTL26	M3	0x000C 0000	MCA[0]_AXR[5]	MCA[1]_AXR[9](M0)						
0x4814 0868	PINCNTL27	M4	0x000C 0000	MCA[0]_AXR[6]	MCB_DR						
0x4814 086C	PINCNTL28	L2	0x000C 0000	MCA[0]_AXR[7](M0)	MCB_DX						
0x4814 0870	PINCNTL29	L1	0x000C 0000	MCA[0]_AXR[8](M0)	MCB_FSX	MCB_FSR(M1)					
0x4814 0874	PINCNTL30	M6	0x000C 0000	MCA[0]_AXR[9](M0)	MCB_CLKX	MCB_CLKR(M1)					
0x4814 0878	PINCNTL31	U5	0x0004 0000	MCA[1]_ACLKX							
0x4814 087C	PINCNTL32	V3	0x000C 0000	MCA[1]_AFSX							
0x4814 0880	PINCNTL33	M1	0x0004 0000	MCA[1]_ACLKR	MCA[1]_AXR[4]						
0x4814 0884	PINCNTL34	M2	0x000C 0000	MCA[1]_AFSR	MCA[1]_AXR[5]						
0x4814 0888	PINCNTL35	V4	0x000E 0000	MCA[1]_AXR[0]	SD0_DAT[4]						
0x4814 088C	PINCNTL36	T6	0x000E 0000	MCA[1]_AXR[1]	SD0_DAT[5]						
0x4814 0890	PINCNTL37	R3	0x000C 0000	MCA[1]_AXR[2]	MCB_FSR(M0)						
0x4814 0894	PINCNTL38	N6	0x000C 0000	MCA[1]_AXR[3]	MCB_CLKR(M0)						
0x4814 0898	PINCNTL39	U6	0x0006 0000	MCA[2]_ACLKX							GP0[10](M1)
0x4814 089C	PINCNTL40	AA5	0x000E 0000	MCA[2]_AFSX							GP0[11](M1)
0x4814 08A0	PINCNTL41	N2	0x000E 0000	MCA[2]_AXR[0]	SD0_DAT[6]				UART5_RXD(M3)		GP0[12](M1)
0x4814 08A4	PINCNTL42	V6	0x000E 0000	MCA[2]_AXR[1]	SD0_DAT[7]				UART5_TXD(M3)		GP0[13](M1)
0x4814 08A8	PINCNTL43	V5	0x000C 0000	MCA[2]_AXR[2]	MCA[1]_AXR[6]					TIM2_IO(M0)	GP0[14](M1)
0x4814 08AC	PINCNTL44	H2	0x000C 0000	MCA[2]_AXR[3]	MCA[1]_AXR[7]					TIM3_IO(M0)	GP0[15](M1)
0x4814 08B0	PINCNTL45	G6	0x0004 0000	MCA[3]_ACLKX							GP0[16](M1)
0x4814 08B4	PINCNTL46	H4	0x000C 0000	MCA[3]_AFSX							GP0[17](M1)
0x4814 08B8	PINCNTL47	G1	0x000C 0000	MCA[3]_AXR[0]						TIM4_IO(M0)	GP0[18](M1)
0x4814 08BC	PINCNTL48	G2	0x000C 0000	MCA[3]_AXR[1]						TIM5_IO(M0)	GP0[19](M1)
0x4814 08C0	PINCNTL49	F2	0x000C 0000	MCA[3]_AXR[2]	MCA[1]_AXR[8](M1)						GP0[20](M1)
0x4814 08C4	PINCNTL50	J6	0x000C 0000	MCA[3]_AXR[3]	MCA[1]_AXR[9](M1)						
0x4814 08C8	PINCNTL51	K7	0x0004 0000	MCA[4]_ACLKX							GP0[21](M1)
0x4814 08CC	PINCNTL52	H3	0x000C 0000	MCA[4]_AFSX							GP0[22](M1)
0x4814 08D0	PINCNTL53	H6	0x000C 0000	MCA[4]_AXR[0]							GP0[23](M1)
0x4814 08D4	PINCNTL54	J4	0x000C 0000	MCA[4]_AXR[1]						TIM6_IO(M0)	GP0[24](M1)

Copyright © 2011–2013, Texas Instruments Incorporated

Table 4-13. PINCNTLx Registers MUXMODE Functions (continued)

HEX ADDRESS	REGISTER NAME	PIN NO.	REGISTER RESET VALUE	MUXMODE[7:0] SETTINGS							
				0x1	0x2	0x4	0x8	0x10	0x20	0x40	0x80
0x4814 08D8	PINCNTL55	J3	0x000C 0000	MCA[5]_ACLKX							GP0[25](M1)
0x4814 08DC	PINCNTL56	H5	0x000C 0000	MCA[5]_AFSX							GP0[26](M1)
0x4814 08E0	PINCNTL57	L7	0x000C 0000	MCA[5]_AXR[0]	MCA[4]_AXR[2]						GP0[27](M1)
0x4814 08E4	PINCNTL58	L6	0x000C 0000	MCA[5]_AXR[1]	MCA[4]_AXR[3]					TIM7_IO(M0)	GP0[28](M1)
0x4814 08E8	PINCNTL59	U4	0x0004 0000				UART2_RXD(M1)				GP0[29]
0x4814 08EC	PINCNTL60	T2	0x0004 0000				TCLKIN				GP0[30]
0x4814 08F0	PINCNTL61	U3	0x000C 0000				UART2_TXD(M1)				GP0[31]
0x4814 08F4	PINCNTL62	W1	0x000C 0000								GP1[7](M1)
0x4814 08F8	PINCNTL63	W2	0x000E 0000								GP1[8](M1)
0x4814 08FC	PINCNTL64	V1	0x000C 0000								GP1[9](M1)
0x4814 0900	PINCNTL65	V2	0x000E 0000								GP1[10](M1)
0x4814 0904	PINCNTL66	–	0x000C 0000	Reserved. ***Do Not*** Program this Register.							
0x4814 0908	PINCNTL67	–	0x000E 0000	Reserved. ***Do Not*** Program this Register.							
0x4814 090C	PINCNTL68	AH6	0x000E 0000	DCAN0_TX	UART2_TXD(M2)				I2C[3]_SDA(M1)		GP1[0]
0x4814 0910	PINCNTL69	AG6	0x000E 0000	DCAN0_RX	UART2_RXD(M2)				I2C[3]_SCL(M1)		GP1[1]
0x4814 0914	PINCNTL70	AH5	0x000E 0000	UART0_RXD							
0x4814 0918	PINCNTL71	AG5	0x000E 0000	UART0_TXD							
0x4814 091C	PINCNTL72	AE6	0x000E 0000	$\overline{\text{UART0_CTS}}$	UART4_RXD(M3)		DCAN1_TX	$\overline{\text{SPI[1]_SCS[3]}}$		SD0_SDCD	
0x4814 0920	PINCNTL73	AF5	0x000E 0000	$\overline{\text{UART0_RTS}}$	UART4_TXD(M3)		DCAN1_RX	$\overline{\text{SPI[1]_SCS[2]}}$		SD2_SDCD	
0x4814 0924	PINCNTL74	AH4	0x000E 0000	$\overline{\text{UART0_DCD}}$	UART3_RXD(M0)			$\overline{\text{SPI[0]_SCS[3]}}$	I2C[2]_SCL(M0)	SD1_POW	GP1[2]
0x4814 0928	PINCNTL75	AG4	0x000E 0000	$\overline{\text{UART0_DSR}}$	UART3_TXD(M0)			$\overline{\text{SPI[0]_SCS[2]}}$	I2C[2]_SDA(M0)	SD1_SDWP	GP1[3]
0x4814 092C	PINCNTL76	AG2	0x000E 0000	$\overline{\text{UART0_DTR}}$	$\overline{\text{UART3_CTS}}$(M0)	UART1_TXD(M0)					GP1[4]
0x4814 0930	PINCNTL77	AF4	0x000E 0000	UART0_RIN	$\overline{\text{UART3_RTS}}$(M0)	UART1_RXD(M0)					GP1[5]
0x4814 0934	PINCNTL78	AF24	0x000E 0000	I2C[1]_SCL	HDMI_SCL(M0)						
0x4814 0938	PINCNTL79	AG24	0x000E 0000	I2C[1]_SDA	HDMI_SDA(M0)						
0x4814 093C	PINCNTL80	AE5	0x0006 0000	$\overline{\text{SPI[0]_SCS[1]}}$	SD1_SDCD	SATA_ACT0_LED			EDMA_EVT1(M1)	TIM4_IO(M1)	GP1[6]
0x4814 0940	PINCNTL81	AD6	0x0006 0000	$\overline{\text{SPI[0]_SCS[0]}}$							
0x4814 0944	PINCNTL82	AC7	0x0006 0000	SPI[0]_SCLK							
0x4814 0948	PINCNTL83	AF3	0x0006 0000	SPI[0]_D[1]							
0x4814 094C	PINCNTL84	AE3	0x0006 0000	SPI[0]_D[0]							
0x4814 0950	PINCNTL85	AD3	0x0006 0000	$\overline{\text{SPI[1]_SCS[0]}}$							GP1[16](M1)
0x4814 0954	PINCNTL86	AC3	0x0006 0000	SPI[1]_SCLK							GP1[17](M1)
0x4814 0958	PINCNTL87	AA3	0x0006 0000	SPI[1]_D[1]							GP1[18](M1)
0x4814 095C	PINCNTL88	AA6	0x0006 0000	SPI[1]_D[0]							GP1[26](M1)

Copyright © 2011–2013, Texas Instruments Incorporated

Table 4-13. PINCNTLx Registers MUXMODE Functions (continued)

HEX ADDRESS	REGISTER NAME	PIN NO.	REGISTER RESET VALUE	MUXMODE[7:0] SETTINGS							
				0x1	0x2	0x4	0x8	0x10	0x20	0x40	0x80
0x4814 0960	PINCNTL89	U26	0x0005 0000	GPMC_D[0]							BTMODE[0]
0x4814 0964	PINCNTL90	Y28	0x0005 0000	GPMC_D[1]							BTMODE[1]
0x4814 0968	PINCNTL91	V27	0x0005 0000	GPMC_D[2]							BTMODE[2]
0x4814 096C	PINCNTL92	W27	0x0005 0000	GPMC_D[3]							BTMODE[3]
0x4814 0970	PINCNTL93	V26	0x0005 0000	GPMC_D[4]							BTMODE[4]
0x4814 0974	PINCNTL94	AA28	0x0005 0000	GPMC_D[5]							BTMODE[5]
0x4814 0978	PINCNTL95	U25	0x0005 0000	GPMC_D[6]							BTMODE[6]
0x4814 097C	PINCNTL96	V25	0x0005 0000	GPMC_D[7]							BTMODE[7]
0x4814 0980	PINCNTL97	Y27	0x0005 0000	GPMC_D[8]							BTMODE[8]
0x4814 0984	PINCNTL98	AB28	0x0005 0000	GPMC_D[9]							BTMODE[9]
0x4814 0988	PINCNTL99	Y26	0x0005 0000	GPMC_D[10]							BTMODE[10]
0x4814 098C	PINCNTL100	AA27	0x0005 0000	GPMC_D[11]							BTMODE[11]
0x4814 0990	PINCNTL101	U24	0x0005 0000	GPMC_D[12]							BTMODE[12]
0x4814 0994	PINCNTL102	U23	0x0005 0000	GPMC_D[13]							BTMODE[13]
0x4814 0998	PINCNTL103	V24	0x0005 0000	GPMC_D[14]							BTMODE[14]
0x4814 099C	PINCNTL104	Y25	0x0005 0000	GPMC_D[15]							BTMODE[15]
0x4814 09A0	PINCNTL105	AD27	0x0004 0000	GPMC_A[16]							GP2[5]$^{(M0)}$
0x4814 09A4	PINCNTL106	V23	0x0004 0000	GPMC_A[17]							GP2[6]$^{(M0)}$
0x4814 09A8	PINCNTL107	AE28	0x0004 0000	GPMC_A[18]						TIM2_IO$^{(M2)}$	GP1[13]$^{(M0)}$
0x4814 09AC	PINCNTL108	AC27	0x0004 0000	GPMC_A[19]						TIM3_IO$^{(M2)}$	GP1[14]$^{(M0)}$
0x4814 09B0	PINCNTL109	AD28	0x0006 0000	GPMC_A[20]$^{(M0)}$		$\overline{\text{SPI[2]_SCS[1]}}$					GP1[15]$^{(M0)}$
0x4814 09B4	PINCNTL110	AC28	0x0004 0000	GPMC_A[21]$^{(M0)}$		SPI[2]_D[0]$^{(M0)}$					GP1[16]$^{(M0)}$
0x4814 09B8	PINCNTL111	AB27	0x0006 0000	GPMC_A[22]$^{(M0)}$		SPI[2]_D[1]$^{(M0)}$		HDMI_CEC$^{(M0)}$		TIM4_IO$^{(M2)}$	GP1[17]$^{(M0)}$
0x4814 09BC	PINCNTL112	AA26	0x0004 0000	GPMC_A[23]$^{(M0)}$		SPI[2]_SCLK$^{(M0)}$		HDMI_HPDET$^{(M0)}$		TIM5_IO$^{(M2)}$	GP1[18]$^{(M0)}$
0x4814 09C0	PINCNTL113	L25	0x0006 0000	SD2_DAT[7]	GPMC_A[24]$^{(M0)}$	GPMC_A[20]$^{(M1)}$			UART2_RXD$^{(M3)}$		GP1[19]
0x4814 09C4	PINCNTL114	N23	0x0006 0000	SD2_DAT[6]	GPMC_A[25]$^{(M0)}$	GPMC_A[21]$^{(M1)}$			UART2_TXD$^{(M3)}$		GP1[20]
0x4814 09C8	PINCNTL115	P22	0x0006 0000	SD2_DAT[5]	GPMC_A[26]$^{(M0)}$	GPMC_A[22]$^{(M1)}$				TIM6_IO$^{(M2)}$	GP1[21]
0x4814 09CC	PINCNTL116	R24	0x0006 0000	SD2_DAT[4]	GPMC_A[27]$^{(M0)}$	GPMC_A[23]$^{(M1)}$	$\overline{\text{GPMC_CS[7]}}$		EDMA_EVT0$^{(M1)}$	TIM7_IO$^{(M2)}$	GP1[22]
0x4814 09D0	PINCNTL117	J28	0x0006 0000	SD2_DAT[3]	GPMC_A[1]$^{(M1)}$						GP2[5]$^{(M1)}$
0x4814 09D4	PINCNTL118	K27	0x0006 0000	SD2_DAT[2]_SDR$\overline{\text{W}}$	GPMC_A[2]$^{(M1)}$						GP2[6]$^{(M1)}$
0x4814 09D8	PINCNTL119	M24	0x0006 0000	SD2_DAT[1]_$\overline{\text{SDIRQ}}$	GPMC_A[3]$^{(M1)}$						GP1[13]$^{(M1)}$
0x4814 09DC	PINCNTL120	L26	0x0006 0000	SD2_DAT[0]	GPMC_A[4]$^{(M1)}$						GP1[14]$^{(M1)}$
0x4814 09E0	PINCNTL121	M23	0x0006 0000	SD2_CLK							GP1[15]$^{(M1)}$
0x4814 09E4	PINCNTL122	T28	0x0006 0000	$\overline{\text{GPMC_CS[0]}}$							GP1[23]
0x4814 09E8	PINCNTL123	K28	0x0006 0000	$\overline{\text{GPMC_CS[1]}}$	GPMC_A[25]$^{(M1)}$						GP1[24]

Copyright © 2011–2013, Texas Instruments Incorporated

Table 4-13. PINCNTLx Registers MUXMODE Functions (continued)

HEX ADDRESS	REGISTER NAME	PIN NO.	REGISTER RESET VALUE	MUXMODE[7:0] SETTINGS							
				0x1	0x2	0x4	0x8	0x10	0x20	0x40	0x80
0x4814 09EC	PINCNTL124	M25	0x0006 0000	GPMC_CS[2]	GPMC_A[24](M1)						GP1[25]
0x4814 09F0	PINCNTL125	P26	0x0006 0000	GPMC_CS[3]	VIN[1]B_CLK	SPI[2]_SCS[0]					GP1[26](M0)
0x4814 09F4	PINCNTL126	P25	0x0006 0000	GPMC_CS[4]	SD2_CMD						GP1[8](M0)
0x4814 09F8	PINCNTL127	R26	0x0006 0000	GPMC_CLK	GPMC_CS[5]		GPMC_WAIT[1]	CLKOUT1	EDMA_EVT3(M0)	TIM4_IO(M3)	GP1[27]
0x4814 09FC	PINCNTL128	M26	0x0006 0000	GPMC_ADV_ALE	GPMC_CS[6]					TIM5_IO(M3)	GP1[28]
0x4814 0A00	PINCNTL129	T27	0x0006 0000	GPMC_OE_RE							
0x4814 0A04	PINCNTL130	U28	0x0006 0000	GPMC_WE							
0x4814 0A08	PINCNTL131	U27	0x0004 0000	GPMC_BE[0]_CLE	GPMC_A[25](M2)				EDMA_EVT2(M0)	TIM6_IO(M3)	GP1[29]
0x4814 0A0C	PINCNTL132	V28	0x0004 0000	GPMC_BE[1]	GPMC_A[24](M2)				EDMA_EVT1(M0)	TIM7_IO(M3)	GP1[30]
0x4814 0A10	PINCNTL133	W28	0x0006 0000	GPMC_WAIT[0]	GPMC_A[26](M2)				EDMA_EVT0(M0)		GP1[31]
0x4814 0A14	PINCNTL134	AE17	0x0004 0000	VIN[0]B_CLK					CLKOUT0		GP1[9](M0)
0x4814 0A18	PINCNTL135	AE21	0x000E 0000	VIN[0]A_DE(M0)				VIN[0]B_HSYNC	UART5_TXD(M1)	I2C[2]_SDA(M1)	GP2[0]
0x4814 0A1C	PINCNTL136	AA20	0x000E 0000	VIN[0]A_FLD(M0)				VIN[0]B_VSYNC	UART5_RXD(M1)	I2C[2]_SCL(M3)	GP2[1]
0x4814 0A20	PINCNTL137	AB20	0x000C 0000	VIN[0]A_CLK							GP2[2](M1)
0x4814 0A24	PINCNTL138	AC20	0x000E 0000	VIN[0]A_HSYNC					UART5_RTS(M1)		GP2[3]
0x4814 0A28	PINCNTL139	AD20	0x000E 0000	VIN[0]A_VSYNC					UART5_CTS(M1)		GP2[4]
0x4814 0A2C	PINCNTL140	AF9	0x000C 0000	VIN[0]A_D[0]							GP1[11](M1)
0x4814 0A30	PINCNTL141	AB11	0x000C 0000	VIN[0]A_D[1]							GP1[12](M1)
0x4814 0A34	PINCNTL142	AC9	0x000C 0000	VIN[0]A_D[2]							GP2[7]
0x4814 0A38	PINCNTL143	AE12	0x000C 0000	VIN[0]A_D[3]							GP2[8]
0x4814 0A3C	PINCNTL144	AH8	0x000C 0000	VIN[0]A_D[4]							GP2[9]
0x4814 0A40	PINCNTL145	AG16	0x000C 0000	VIN[0]A_D[5]							GP2[10]
0x4814 0A44	PINCNTL146	AH16	0x000C 0000	VIN[0]A_D[6]							GP2[11]
0x4814 0A48	PINCNTL147	AA11	0x000C 0000	VIN[0]A_D[7]							GP2[12]
0x4814 0A4C	PINCNTL148	AB15	0x000C 0000	VIN[0]A_D[8]_BD[0]							GP2[13]
0x4814 0A50	PINCNTL149	AG9	0x000C 0000	VIN[0]A_D[9]_BD[1]							GP2[14]
0x4814 0A54	PINCNTL150	AH9	0x000C 0000	VIN[0]A_D[10]_BD[2]							GP2[15]
0x4814 0A58	PINCNTL151	AH17	0x000C 0000	VIN[0]A_D[11]_BD[3]					CAM_WE(M1)		GP2[16]
0x4814 0A5C	PINCNTL152	AG17	0x0004 0000	VIN[0]A_D[12]_BD[4]					CLKOUT1		GP2[17]
0x4814 0A60	PINCNTL153	AF17	0x000C 0000	VIN[0]A_D[13]_BD[5]					CAM_RESET		GP2[18]
0x4814 0A64	PINCNTL154	AC12	0x000C 0000	VIN[0]A_D[14]_BD[6]					CAM_STROBE		GP2[19]
0x4814 0A68	PINCNTL155	AC14	0x000C 0000	VIN[0]A_D[15]_BD[7]					CAM_SHUTTER		GP2[20]
0x4814 0A6C	PINCNTL156	AA21	0x000E 0000	VIN[0]A_D[16]	CAM_D[8]				I2C[2]_SCL(M1)		GP0[10](M0)
0x4814 0A70	PINCNTL157	AB21	0x000C 0000	VIN[0]A_D[17]	CAM_D[9]		EMAC[1]_RMRXER(M1)				GP0[11](M0)

Table 4-13. PINCNTLx Registers MUXMODE Functions (continued)

HEX ADDRESS	REGISTER NAME	PIN NO.	REGISTER RESET VALUE	MUXMODE[7:0] SETTINGS							
				0x1	0x2	0x4	0x8	0x10	0x20	0x40	0x80
0x4814 0A74	PINCNTL158	AF20	0x000E 0000	VIN[0]A_D[18]	CAM_D[10]		EMAC[1]_RMRXD[1](M1)		I2C[3]_SCL(M2)		GP0[12](M0)
0x4814 0A78	PINCNTL159	AF21	0x000E 0000	VIN[0]A_D[19]	CAM_D[11]		EMAC[1]_RMRXD[0](M1)		I2C[3]_SDA(M2)		GP0[13](M0)
0x4814 0A7C	PINCNTL160	AC17	0x000C 0000	VIN[0]A_D[20]	CAM_D[12]		EMAC[1]_RMCRSDV(M1)		$\overline{\text{SPI[3]_SCS[0]}}$		GP0[14](M0)
0x4814 0A80	PINCNTL161	AE18	0x0004 0000	VIN[0]A_D[21]	CAM_D[13]		EMAC[1]_RMTXD[0](M1)		SPI[3]_SCLK(M0)		GP0[15](M0)
0x4814 0A84	PINCNTL162	AC21	0x0004 0000	VIN[0]A_D[22]	CAM_D[14]		EMAC[1]_RMTXD[1](M1)		SPI[3]_D[1](M0)		GP0[16](M0)
0x4814 0A88	PINCNTL163	AC16	0x0004 0000	VIN[0]A_D[23]	CAM_D[15]		EMAC[1]_RMTXEN(M1)		SPI[3]_D[0](M0)		GP0[17](M0)
0x4814 0A8C	PINCNTL164	AB17	0x0006 0000	VIN[0]A_DE(M1)	CAM_D[7]						GP0[18](M0)
0x4814 0A90	PINCNTL165	AC15	0x0006 0000	VIN[0]B_DE	CAM_D[6]						GP0[19](M0)
0x4814 0A94	PINCNTL166	AC22	0x0006 0000	VIN[0]A_FLD(M1)	CAM_D[5]						GP0[20](M0)
0x4814 0A98	PINCNTL167	AD17	0x0006 0000	VIN[0]B_FLD	CAM_D[4]						GP0[21](M0)
0x4814 0A9C	PINCNTL168	AD18	0x0006 0000	VOUT[1]_G_Y_YC[1]	CAM_D[3]			GPMC_A[5](M1)	UART4_RXD(M0)		GP0[22](M0)
0x4814 0AA0	PINCNTL169	AC18	0x0004 0000	VOUT[1]_G_Y_YC[0]	CAM_D[2]			GPMC_A[6](M1)	UART4_TXD(M0)		GP0[23](M0)
0x4814 0AA4	PINCNTL170	AC19	0x0004 0000	VOUT[1]_R_CR[1]	CAM_D[1]			GPMC_A[7](M1)	$\overline{\text{UART4_CTS}}$(M0)		GP0[24](M0)
0x4814 0AA8	PINCNTL171	AA22	0x0004 0000	VOUT[1]_R_CR[0]	CAM_D[0]			GPMC_A[8](M1)	$\overline{\text{UART4_RTS}}$(M0)		GP0[25](M0)
0x4814 0AAC	PINCNTL172	AE23	0x0004 0000	VOUT[1]_B_CB_C[1]	CAM_HS			GPMC_A[9](M1)	UART2_RXD(M0)		GP0[26](M0)
0x4814 0AB0	PINCNTL173	AD23	0x0006 0000	VOUT[1]_B_CB_C[0]	CAM_VS			GPMC_A[10](M1)	UART2_TXD(M0)		GP0[27](M0)
0x4814 0AB4	PINCNTL174	AB23	0x0004 0000	VOUT[1]_FLD	CAM_FLD	$\overline{\text{CAM_WE}}$(M0)		GPMC_A[11](M1)	$\overline{\text{UART2_CTS}}$		GP0[28](M0)
0x4814 0AB8	PINCNTL175	AF18	0x0004 0000	VOUT[0]_FLD(M1)	CAM_PCLK			GPMC_A[12](M1)	$\overline{\text{UART2_RTS}}$		GP2[2](M0)
0x4814 0ABC	PINCNTL176	AD12	0x000C 0000	VOUT[0]_CLK							
0x4814 0AC0	PINCNTL177	AC11	0x000C 0000	VOUT[0]_HSYNC							
0x4814 0AC4	PINCNTL178	AB13	0x000C 0000	VOUT[0]_VSYNC							
0x4814 0AC8	PINCNTL179	AA10	0x000C 0000	VOUT[0]_AVID	VOUT[0]_FLD(M0)			SPI[3]_SCLK(M2)		TIM7_IO(M1)	GP2[21]
0x4814 0ACC	PINCNTL180	AG7	0x000C 0000 Reset by GCR Only	VOUT[0]_B_CB_C[2]	EMU2						GP2[22]
0x4814 0AD0	PINCNTL181	AE15	0x000C 0000	VOUT[0]_B_CB_C[3]							GP2[23]
0x4814 0AD4	PINCNTL182	AD11	0x000C 0000	VOUT[0]_B_CB_C[4]							
0x4814 0AD8	PINCNTL183	AD15	0x000C 0000	VOUT[0]_B_CB_C[5]							
0x4814 0ADC	PINCNTL184	AC10	0x000C 0000	VOUT[0]_B_CB_C[6]							
0x4814 0AE0	PINCNTL185	AB10	0x000C 0000	VOUT[0]_B_CB_C[7]							
0x4814 0AE4	PINCNTL186	AF15	0x000C 0000	VOUT[0]_B_CB_C[8]							

Copyright © 2011–2013, Texas Instruments Incorporated

Table 4-13. PINCNTLx Registers MUXMODE Functions (continued)

HEX ADDRESS	REGISTER NAME	PIN NO.	REGISTER RESET VALUE	MUXMODE[7:0] SETTINGS							
				0x1	0x2	0x4	0x8	0x10	0x20	0x40	0x80
0x4814 0AE8	PINCNTL187	AG15	0x000C 0000	VOUT[0]_B_CB_C[9]							
0x4814 0AEC	PINCNTL188	AH7	0x000C 0000 Reset by GCR Only	VOUT[0]_G_Y_YC[2]	EMU3						GP2[24]
0x4814 0AF0	PINCNTL189	AH15	0x000C 0000	VOUT[0]_G_Y_YC[3]							GP2[25]
0x4814 0AF4	PINCNTL190	AB8	0x000C 0000	VOUT[0]_G_Y_YC[4]							
0x4814 0AF8	PINCNTL191	AB12	0x000C 0000	VOUT[0]_G_Y_YC[5]							
0x4814 0AFC	PINCNTL192	AA8	0x000C 0000	VOUT[0]_G_Y_YC[6]							
0x48140B00	PINCNTL193	AD14	0x000C 0000	VOUT[0]_G_Y_YC[7]							
0x48140B04	PINCNTL194	AE14	0x000C 0000	VOUT[0]_G_Y_YC[8]							
0x48140B08	PINCNTL195	AF14	0x000C 0000	VOUT[0]_G_Y_YC[9]							
0x48140B0C	PINCNTL196	AD9	0x000C 0000 Reset by GCR Only	VOUT[0]_R_CR[2]	EMU4						GP2[26]
0x4814 0B10	PINCNTL197	AB9	0x000C 0000	VOUT[0]_R_CR[3]							GP2[27]
0x4814 0B14	PINCNTL198	AA9	0x000C 0000	VOUT[0]_R_CR[4]							
0x4814 0B18	PINCNTL199	AF8	0x000C 0000	VOUT[0]_R_CR[5]							
0x4814 0B1C	PINCNTL200	AF6	0x000C 0000	VOUT[0]_R_CR[6]							
0x4814 0B20	PINCNTL201	AF12	0x000C 0000	VOUT[0]_R_CR[7]							
0x4814 0B24	PINCNTL202	AE8	0x000C 0000	VOUT[0]_R_CR[8]							
0x4814 0B28	PINCNTL203	AC13	0x000C 0000	VOUT[0]_R_CR[9]							
0x4814 0B2C	PINCNTL204	AE24	0x0004 0000	VOUT[1]_CLK	EMAC[1]_MTCLK	VIN[1]A_HSYNC					GP2[28]
0x4814 0B30	PINCNTL205	AC24	0x0004 0000	VOUT[1]_HSYNC	EMAC[1]_MCOL	VIN[1]A_VSYNC		SPI[3]_D[1](M2)	$\overline{\text{UART3_RTS}}$(M1)		GP2[29]
0x4814 0B34	PINCNTL206	AA23	0x0004 0000	VOUT[1]_VSYNC	EMAC[1]_MCRS	VIN[1]A_FLD	VIN[1]A_DE	SPI[3]_D[0](M2)	$\overline{\text{UART3_CTS}}$(M1)		GP2[30]
0x4814 0B38	PINCNTL207	Y22	0x0004 0000	VOUT[1]_AVID	EMAC[1]_MRXER	VIN[1]A_CLK			$\overline{\text{UART4_RTS}}$(M2)	TIM6_IO(M1)	GP2[31]
0x4814 0B3C	PINCNTL208	AH25	0x0004 0000	VOUT[1]_B_CB_C[3]	EMAC[1]_MRCLK	VIN[1]A_D[0]			$\overline{\text{UART4_CTS}}$(M2)		GP3[0]
0x4814 0B40	PINCNTL209	AG25	0x0004 0000	VOUT[1]_B_CB_C[4]	EMAC[1]_MRXD[0]	VIN[1]A_D[1]			UART4_RXD(M2)		GP3[1]
0x4814 0B44	PINCNTL210	AF25	0x0004 0000	VOUT[1]_B_CB_C[5]	EMAC[1]_MRXD[1]	VIN[1]A_D[2]			UART4_TXD(M2)		GP3[2]
0x4814 0B48	PINCNTL211	AD25	0x0004 0000	VOUT[1]_B_CB_C[6]	EMAC[1]_MRXD[2]	VIN[1]A_D[3]			UART3_RXD(M1)		GP3[3]
0x48140B4C	PINCNTL212	AC25	0x0004 0000	VOUT[1]_B_CB_C[7]	EMAC[1]_MRXD[3]	VIN[1]A_D[4]			UART3_TXD(M1)		GP3[4]
0x4814 0B50	PINCNTL213	AH26	0x0004 0000	VOUT[1]_B_CB_C[8]	EMAC[1]_MRXD[4]	VIN[1]A_D[5]			I2C[3]_SCL(M3)		GP3[5]
0x4814 0B54	PINCNTL214	AA24	0x0004 0000	VOUT[1]_B_CB_C[9]	EMAC[1]_MRXD[5]	VIN[1]A_D[6]			I2C[3]_SDA(M3)		GP3[6]
0x4814 0B58	PINCNTL215	Y23	0x0004 0000	VOUT[1]_G_Y_YC[3]	EMAC[1]_MRXD[6]	VIN[1]A_D[8]					GP3[7]
0x4814 0B5C	PINCNTL216	W22	0x0004 0000	VOUT[1]_G_Y_YC[4]	EMAC[1]_MRXD[7]	VIN[1]A_D[9]					GP3[8]
0x4814 0B60	PINCNTL217	AG26	0x0004 0000	VOUT[1]_G_Y_YC[5]	EMAC[1]_MRXDV	VIN[1]A_D[10]					GP3[9]
0x4814 0B64	PINCNTL218	AH27	0x0004 0000	VOUT[1]_G_Y_YC[6]	EMAC[1]_GMTCLK	VIN[1]A_D[11]					GP3[10]
0x4814 0B68	PINCNTL219	AF26	0x0004 0000	VOUT[1]_G_Y_YC[7]	EMAC[1]_MTXD[0]	VIN[1]A_D[12]					GP3[11]
0x4814 0B6C	PINCNTL220	AE26	0x0004 0000	VOUT[1]_G_Y_YC[8]	EMAC[1]_MTXD[1]	VIN[1]A_D[13]					GP3[12]

Copyright © 2011–2013, Texas Instruments Incorporated

Table 4-13. PINCNTLx Registers MUXMODE Functions (continued)

HEX ADDRESS	REGISTER NAME	PIN NO.	REGISTER RESET VALUE	MUXMODE[7:0] SETTINGS							
				0x1	0x2	0x4	0x8	0x10	0x20	0x40	0x80
0x4814 0B70	PINCNTL221	AD26	0x0004 0000	VOUT[1]_G_Y_YC[9]	EMAC[1]_MTXD[2]	VIN[1]A_D[14]					GP3[13]
0x4814 0B74	PINCNTL222	AG27	0x0004 0000	VOUT[1]_R_CR[4]	EMAC[1]_MTXD[3]	VIN[1]A_D[15]			$\overline{\text{SPI[3]_SCS[1]}}$		GP3[14]
0x4814 0B78	PINCNTL223	AC26	0x0004 0000	VOUT[1]_R_CR[5]	EMAC[1]_MTXD[4]	VIN[1]A_D[16]			SPI[3]_SCLK(M1)		GP3[15]
0x4814 0B7C	PINCNTL224	AA25	0x0004 0000	VOUT[1]_R_CR[6]	EMAC[1]_MTXD[5]	VIN[1]A_D[17]			SPI[3]_D[1](M1)		GP3[16]
0x4814 0B80	PINCNTL225	V22	0x0004 0000	VOUT[1]_R_CR[7]	EMAC[1]_MTXD[6]	VIN[1]A_D[18]			SPI[3]_D[0](M1)		GP3[17]
0x4814 0B84	PINCNTL226	W23	0x0004 0000	VOUT[1]_R_CR[8]	EMAC[1]_MTXD[7]	VIN[1]A_D[19]			UART5_RXD(M2)		GP3[18]
0x4814 0B88	PINCNTL227	Y24	0x0004 0000	VOUT[1]_R_CR[9]	EMAC[1]_MTXEN	VIN[1]A_D[20]			UART5_TXD(M2)		GP3[19]
0x4814 0B8C	PINCNTL228	AF27	0x0006 0000	VOUT[1]_G_Y_YC[2]	GPMC_A[13](M1)	VIN[1]A_D[21]		HDMI_SCL(M1)	$\overline{\text{SPI[2]_SCS[2]}}$	I2C[2]_SCL(M2)	GP3[20]
0x4814 0B90	PINCNTL229	AG28	0x0006 0000	VOUT[1]_R_CR[3]	GPMC_A[14](M1)	VIN[1]A_D[22]		HDMI_SDA(M1)	SPI[2]_SCLK(M1)	I2C[2]_SDA(M2)	GP3[21]
0x4814 0B94	PINCNTL230	AE27	0x0004 0000	VOUT[1]_R_CR[2]	GPMC_A[15](M1)	VIN[1]A_D[23]		HDMI_HPDET(M1)	SPI[2]_D[1](M1)		GP3[22]
0x4814 0B98	PINCNTL231	AF28	0x0006 0000	VOUT[1]_B_CB_C[2]	GPMC_A[0](M1)	VIN[1]A_D[7]		HDMI_CEC(M1)	SPI[2]_D[0](M1)		GP3[30](M1)
0x4814 0B9C	PINCNTL232	J27	0x0004 0000	EMAC_RMREFCLK						TIM2_IO(M3)	GP1[10](M0)
0x4814 0BA0	PINCNTL233	H28	0x000E 0000	MDCLK							GP1[11](M0)
0x4814 0BA4	PINCNTL234	P24	0x000E 0000	MDIO							GP1[12](M0)
0x4814 0BA8	PINCNTL235	L24	0x000C 0000	EMAC[0]_MTCLK/ EMAC[0]_RGRXC	VIN[1]B_D[0]				$\overline{\text{SPI[3]_SCS[3]}}$	I2C[2]_SDA(M3)	GP3[23]
0x4814 0BAC	PINCNTL236	L23	0x000C 0000	EMAC[0]_MCOL/ EMAC[0]_RGRXCTL	VIN[1]B_D[1]	EMAC[0]_RMRXD[0]					GP3[24]
0x4814 0BB0	PINCNTL237	R25	0x000C 0000	EMAC[0]_MCRS/ EMAC[0]_RGRXD[2]	VIN[1]B_D[2]	EMAC[0]_RMRXD[1]					GP3[25]
0x4814 0BB4	PINCNTL238	J26	0x000C 0000	EMAC[0]_MRXER/ EMAC[0]_RGTXCTL	VIN[1]B_D[3]	EMAC[0]_RMRXER					GP3[26]
0x4814 0BB8	PINCNTL239	H27	0x000C 0000	EMAC[0]_MRCLK/ EMAC[0]_RGTXC	VIN[1]B_D[4]	EMAC[0]_RMCRSDV			$\overline{\text{SPI[3]_SCS[2]}}$		GP3[27]
0x4814 0BBC	PINCNTL240	G28	0x0004 0000	EMAC[0]_MRXD[0]/ EMAC[0]_RGTXD[0]	VIN[1]B_D[5]	EMAC[0]_RMTXD[0]					GP3[28]
0x4814 0BC0	PINCNTL241	P23	0x0004 0000	EMAC[0]_MRXD[1]/ EMAC[0]_RGRXD[0]	VIN[1]B_D[6]	EMAC[0]_RMTXD[1]					GP3[29]
0x4814 0BC4	PINCNTL242	R23	0x0004 0000	EMAC[0]_MRXD[2]/ EMAC[0]_RGRXD[1]	VIN[1]B_D[7]	EMAC[0]_RMTXEN					GP3[30](M0)
0x4814 0BC8	PINCNTL243	J25	0x0004 0000	EMAC[0]_MRXD[3]/ EMAC[1]_RGRXCTL		GPMC_A[27](M1)	GPMC_A[26](M1)	GPMC_A[0](M0)	UART5_RXD(M0)		
0x4814 0BCC	PINCNTL244	T23	0x0004 0000	EMAC[0]_MRXD[4]/ EMAC[0]_RGRXD[3]				GPMC_A[1](M0)	UART5_TXD(M0)		
0x4814 0BD0	PINCNTL245	H26	0x0004 0000	EMAC[0]_MRXD[5]/ EMAC[0]_RGTXD[3]				GPMC_A[2](M0)	$\overline{\text{UART5_CTS}}$(M0)		
0x4814 0BD4	PINCNTL246	F28	0x0004 0000	EMAC[0]_MRXD[6]/ EMAC[0]_RGTXD[2]				GPMC_A[3](M0)	$\overline{\text{UART5_RTS}}$(M0)		
0x4814 0BD8	PINCNTL247	G27	0x0004 0000	EMAC[0]_MRXD[7]/ EMAC[0]_RGTXD[1]				GPMC_A[4](M0)	$\overline{\text{SPI[2]_SCS[3]}}$		

Copyright © 2011–2013, Texas Instruments Incorporated

Table 4-13. PINCNTLx Registers MUXMODE Functions (continued)

HEX ADDRESS	REGISTER NAME	PIN NO.	REGISTER RESET VALUE	MUXMODE[7:0] SETTINGS							
				0x1	0x2	0x4	0x8	0x10	0x20	0x40	0x80
0x4814 0BDC	PINCNTL248	K22	0x0004 0000	EMAC[0]_MRXDV/ EMAC[1]_RGRXD[1]				GPMC_A[5](M0)	SPI[2]_SCLK(M2)		
0x4814 0BE0	PINCNTL249	K23	0x0004 0000	EMAC[0]_GMTCLK/ EMAC[1]_RGRXC				GPMC_A[6](M0)	SPI[2]_D[1](M2)		
0x4814 0BE4	PINCNTL250	J24	0x0004 0000	EMAC[0]_MTXD[0]/ EMAC[1]_RGRXD[3]				GPMC_A[7](M0)	SPI[2]_D[0](M2)		
0x4814 0BE8	PINCNTL251	H25	0x0004 0000	EMAC[0]_MTXD[1]/ EMAC[1]_RGTXD[1]				GPMC_A[8](M0)	UART4_RXD(M1)		
0x4814 0BEC	PINCNTL252	H22	0x0004 0000	EMAC[0]_MTXD[2]/ EMAC[1]_RGTXCTL	EMAC[1]_RMRXD[0](M0)			GPMC_A[9](M0)	UART4_TXD(M1)		
0x4814 0BF0	PINCNTL253	H23	0x0004 0000	EMAC[0]_MTXD[3]/ EMAC[1]_RGTXD[0]	EMAC[1]_RMRXD[1](M0)			GPMC_A[10](M0)	$\overline{\text{UART4_CTS}}$(M1)		
0x4814 0BF4	PINCNTL254	G23	0x0004 0000	EMAC[0]_MTXD[4]/ EMAC[1]_RGTXD[2]	EMAC[1]_RMRXER			GPMC_A[11](M0)	$\overline{\text{UART4_RTS}}$(M1)		
0x4814 0BF8	PINCNTL255	F27	0x0004 0000	EMAC[0]_MTXD[5]/ EMAC[1]_RGTXC	EMAC[1]_RMCRSDV(M0)			GPMC_A[12](M0)	UART1_RXD(M1)		
0x4814 0BFC	PINCNTL256	J22	0x0004 0000	EMAC[0]_MTXD[6]/ EMAC[1]_RGRXD[0]	EMAC[1]_RMTXD[0](M0)			GPMC_A[13](M0)	UART1_TXD(M1)		
0x4814 0C00	PINCNTL257	H24	0x0004 0000	EMAC[0]_MTXD[7]/ EMAC[1]_RGTXD[3]	EMAC[1]_RMTXD[1](M0)			GPMC_A[14](M0)	$\overline{\text{UART1_CTS}}$		
0x4814 0C04	PINCNTL258	J23	0x0004 0000	EMAC[0]_MTXEN/ EMAC[1]_RGRXD[2]	EMAC[1]_RMTXEN(M0)			GPMC_A[15](M0)	$\overline{\text{UART1_RTS}}$		
0x4814 0C08	PINCNTL259	J7	0x0004 0000	CLKIN32		CLKOUT0				TIM3_IO(M3)	GP3[31]
0x4814 0C0C	PINCNTL260	J5	0x000E 0000	$\overline{\text{RESET}}$							
0x4814 0C10	PINCNTL261	H7	0x000E 0000	$\overline{\text{NMI}}$							
0x4814 0C14	PINCNTL262	K6	0x0005 0000	$\overline{\text{RSTOUT_WD_OUT}}$							
0x4814 0C18	PINCNTL263	AC4	0x000D 0000	I2C[0]_SCL							
0x4814 0C1C	PINCNTL264	AB6	0x000D 0000	I2C[0]_SDA							
0x4814 0C20	PINCNTL265	–	Undetermined	Reserved. ***Do Not*** Program this Register.							
0x4814 0C24	PINCNTL266	–	Undetermined	Reserved. ***Do Not*** Program this Register.							
0x4814 0C28	PINCNTL267	–	Undetermined	Reserved. ***Do Not*** Program this Register.							
0x4814 0C2C	PINCNTL268	–	Undetermined	Reserved. ***Do Not*** Program this Register.							
0x4814 0C30	PINCNTL269	–	Undetermined	Reserved. ***Do Not*** Program this Register.							
0x4814 0C34	PINCNTL270	AF11	0x000C 0000	USB0_DRVVBUS	GP0[7]						

Copyright © 2011–2013, Texas Instruments Incorporated

4.4 Handling Unused Pins

When device signal pins are unused in the system, they can be left unconnected unless otherwise noted in the Terminal Functions tables (see Section 3.2). For unused input pins, the internal pull resistor should be enabled, or an external pull resistor should be used, to prevent floating inputs. Unless otherwise noted, all supply pins must always be connected to the correct voltage, even when their associated signal pins are unused.

4.5 DeBugging Considerations

4.5.1 Pullup/Pulldown Resistors

Proper board design should ensure that input pins to the TMS320DM814x DaVinci™ Digital Media Processsors device always be at a valid logic level and not floating. This may be achieved via pullup/pulldown resistors. The device features internal pullup (IPU) and internal pulldown (IPD) resistors on most pins to eliminate the need, unless otherwise noted, for external pullup/pulldown resistors.

An external pullup/pulldown resistor needs to be used in the following situations:

- *Boot Configuration Pins*: If the pin is both routed out and 3-stated (not driven), an external pullup/pulldown resistor is ***strongly recommended***, even if the IPU/IPD matches the desired value/state.
- *Other Input Pins*: If the IPU/IPD *does not* match the desired value/state, use an external pullup/pulldown resistor to pull the signal to the opposite rail.

For the boot configuration pins (listed in Table 3-1, *Boot Configuration Terminal Functions*), if they are both routed out and 3-stated (not driven), it is ***strongly recommended*** that an external pullup/pulldown resistor be implemented. Although, internal pullup/pulldown resistors exist on these pins and they may match the desired configuration value, providing external connectivity can help ensure that valid logic levels are latched on these device boot configuration pins. In addition, applying external pullup/pulldown resistors on the boot and configuration pins adds convenience to the user in debugging and flexibility in switching operating modes.

Tips for choosing an external pullup/pulldown resistor:

- Consider the total amount of current that may pass through the pullup or pulldown resistor. Make sure to include the leakage currents of all the devices connected to the net, as well as any internal pullup or pulldown resistors.
- Decide a target value for the net. For a pulldown resistor, this should be below the lowest V_{IL} level of all inputs connected to the net. For a pullup resistor, this should be above the highest V_{IH} level of all inputs on the net. A reasonable choice would be to target the V_{OL} or V_{OH} levels for the logic family of the limiting device; which, by definition, have margin to the V_{IL} and V_{IH} levels.
- Select a pullup/pulldown resistor with the largest possible value; but, which can still ensure that the net will reach the target pulled value when maximum current from all devices on the net is flowing through the resistor. The current to be considered includes leakage current plus, any other internal and external pullup/pulldown resistors on the net.
- For bidirectional nets, there is an additional consideration which sets a lower limit on the resistance value of the external resistor. Verify that the resistance is small enough that the weakest output buffer can drive the net to the opposite logic level (including margin).
- Remember to include tolerances when selecting the resistor value.
- For pullup resistors, also remember to include tolerances on the DV_{DD} rail.

For most systems, a 1-kΩ resistor can be used to oppose the IPU/IPD while meeting the above criteria. Users should confirm this resistor value is correct for their specific application.

For most systems, a 20-kΩ resistor can be used to compliment the IPU/IPD on the boot and configuration pins while meeting the above criteria. Users should confirm this resistor value is correct for their specific application.

 Copyright © 2011–2013, Texas Instruments Incorporated

For most systems, a 20-kΩ resistor can also be used as an external PU/PD on the pins that have IPUs/IPDs disabled and require an external PU/PD resistor while still meeting the above criteria. Users should confirm this resistor value is correct for their specific application.

For more detailed information on input current (I_I), and the low-/high-level input voltages (V_{IL} and V_{IH}) for the device, see Section 6.4, *Electrical Characteristics Over Recommended Ranges of Supply Voltage and Operating Temperature*.

For the internal pullup/pulldown resistors for all device pins, see the peripheral/system-specific terminal functions table.

5 System Interconnect

The device's various processors, subsystems, and peripherals are interconnected through a switch fabric architecture. The switch fabric is composed of an L3 and L4 interconnect, a switched central resource (SCR), and multiple bridges (for an overview, see Figure 5-1). Not all Initiators in the switch fabric are connected to all Target peripherals. The supported initiator and target connections are designated by a "X" in Table 5-1, *Target/Initiator Connectivity*.

For more detailed information on the device System Interconnect Architecture, see the *TMS320DM814x DaVinci Digital Media Processors Technical Reference Manual* (Literature Number: SPRUGZ8).

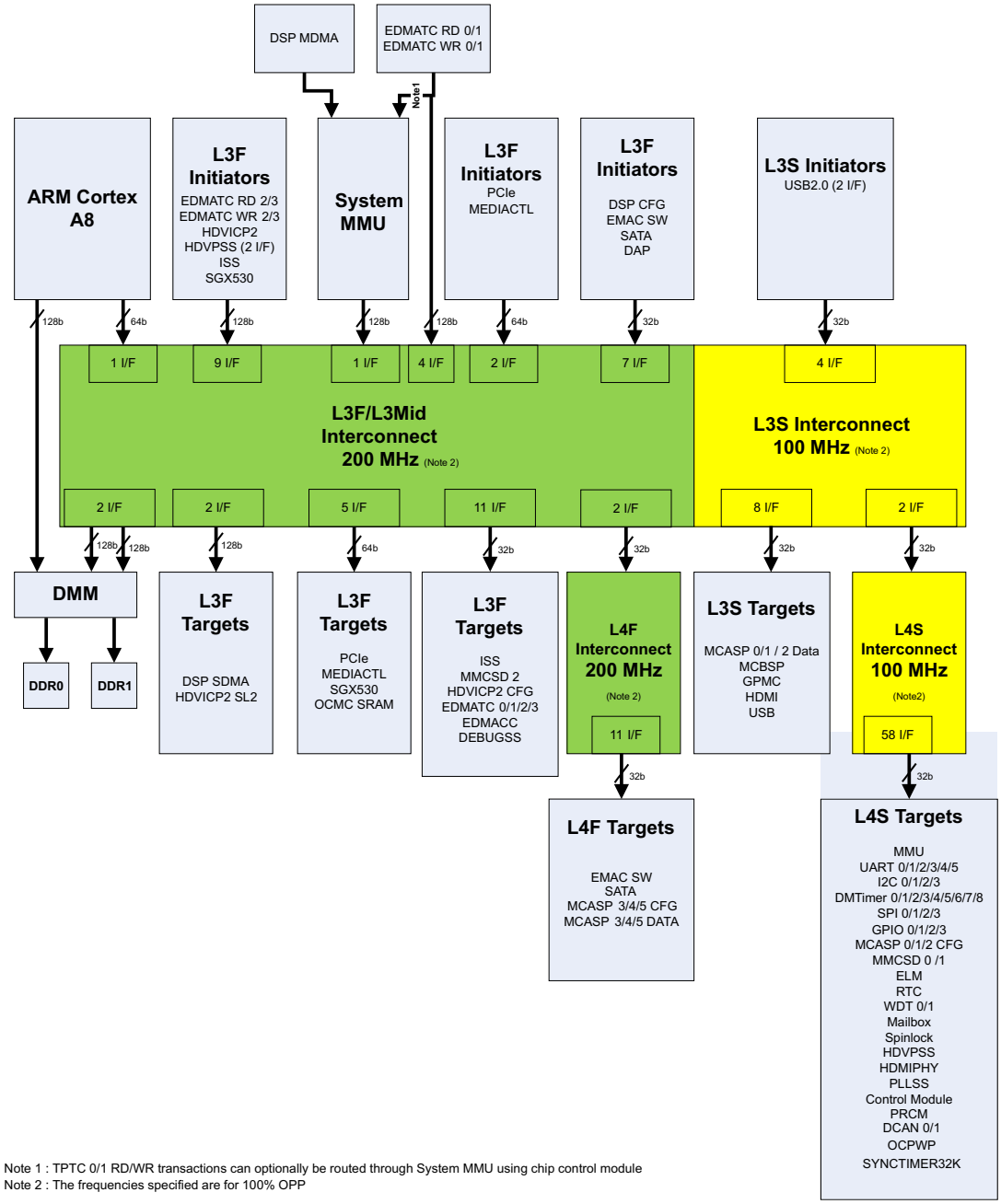

Figure 5-1. System Interconnect

Copyright © 2011–2013, Texas Instruments Incorporated

Table 5-1. L3 Master/Slave Connectivity[(1)]

(1) X = Connection exists.
S = Selectable path based on thirty-third address bit from control module register for System MMU accessible targets. Non-System MMU accessible targets (such as, C674x SDMA) will always be direct mapped.

	SLAVES																								
MASTERS	**System MMU**	**EDMA DMM Tiler/Lisa0**	**EDMA DMM Tiler/Lisa1**	**EDMA DMM ELLA**	**HDVICP2 SL2**	**HDVICP2 Hst**	**Media Controller**	**GPMC**	**SGX530**	**C674x SDMA**	**PCIe Gen2 Slave**	**McASP 0/1/2**	**McBSP**	**HDMI 1.3 Tx Audio**	**L4 HS Periph Port 0**	**L4 HS Periph Port 1**	**L4 Std Periph Port 0**	**L4 Std Periph Port 1**	**L3 Registers**	**EDMA TPTC0 - 3 CFG**	**EDMA TPCC**	**OCMC RAM**	**USB2.0 CFG**	**Imaging SS**	**SD2**
ARM M1 (128-bit)				X																					
ARM M2 (64-bit)			X		X	X	X	X	X	X	X	X	X	X	X		X		X	X	X	X	X	X	X
C674x MDMA	X																								
System MMU			X					X			X	X	X		X		X				X	X			
C674x CFG															X		X			X	X		X		
HDVICP2 VDMA		X																				X			
HDVPSS Mstr0		X			X					X												X			
HDVPSS Mstr1			X		X					X												X			
SGX530 BIF			X		X			X		X												X			
SATA		X			X			X		X												X			
EMAC SW		X			X					X												X			
USB2.0 DMA		X			X					X															
USB2.0 Queue Mgr		X			X			X		X												X			
PCIe Gen2		X			X	X	X	X	X	X		X	X	X		X		X		X	X	X	X	X	X
Media Controller		X			X	X		X	X	X	X	X	X	X	X		X			X	X	X	X		X
DeBug Access Port (DAP)		X			X	X	X	X	X	X	X	X	X	X		X		X	X	X	X	X	X		
EDMA TPTC0 RD	S	X			X	X	X	X	X	X	X	X	X	X		X		X			X	X	X	X	X
EDMA TPTC0 WR	S		X		X	X	X	X	X	X	X	X	X	X		X		X			X	X	X	X	X
EDMA TPTC1 RD	S		X		X	X	X	X	X	X	X	X	X	X	X		X				X	X	X	X	X
EDMA TPTC1 WR	S	X			X	X	X	X	X	X	X	X	X	X	X		X				X	X	X	X	X
EDMA TPTC2 RD			X		X	X	X	X	X	X	X	X	X	X		X		X			X	X	X	X	X
EDMA TPTC2 WR		X			X	X	X	X	X	X	X	X	X	X		X		X			X	X	X	X	X
EDMA TPTC3 RD		X			X	X	X	X	X	X	X	X	X	X	X		X				X	X	X	X	X
EDMA TPTC3 WR			X		X	X	X	X	X	X	X	X	X	X	X		X				X	X	X	X	X
ISS			X		X					X												X			

The L4 interconnect is a non-blocking peripheral interconnect that provides low-latency access to a large number of low-bandwidth, physically-dispersed target cores. The L4 can handle incoming traffic from up to four initiators and can distribute those communication requests to and collect related responses from up to 63 targets.

The device provides two interfaces with L3 interconnect for high-speed peripheraland standard peripheral.

Table 5-2. L4 Peripheral Connectivity(1)

L4 PERIPHERALS	MASTERS							
	ARM Cortex-A8 M2 (64-bit)	EDMA TPTC0	EDMA TPTC1	EDMA TPTC2	EDMA TPTC3	C674x CONFIG	System MMU	PCIe
L4 Fast Peripherals Port 0/1								
EMAC SW	Port0	Port1	Port0	Port1	Port0	Port0	Port0	Port1
SATA	Port0	Port1	Port0	Port1	Port0			Port1
McASP3 CFG	Port0	Port1	Port0	Port1	Port0	Port0	Port0	Port1
McASP4 CFG	Port0	Port1	Port0	Port1	Port0	Port0	Port0	Port1
McASP5 CFG	Port0	Port1	Port0	Port1	Port0	Port0	Port0	Port1
McASP3 DATA	Port0	Port1	Port0	Port1	Port0	Port0	Port0	Port1
McASP4 DATA	Port0	Port1	Port0	Port1	Port0	Port0	Port0	Port1
McASP5 DATA	Port0	Port1	Port0	Port1	Port0	Port0	Port0	Port1
L4 Slow Peripherals Port 0/1								
I2C0	Port0	Port1	Port0	Port1	Port0	Port0	Port0	Port1
I2C1	Port0	Port1	Port0	Port1	Port0	Port0	Port0	Port1
I2C2	Port0	Port1	Port0	Port1	Port0	Port0	Port0	Port1
I2C3	Port0	Port1	Port0	Port1	Port0	Port0	Port0	Port1
SPI0	Port0	Port1	Port0	Port1	Port0	Port0	Port0	Port1
SPI1	Port0	Port1	Port0	Port1	Port0	Port0	Port0	Port1
SPI2	Port0	Port1	Port0	Port1	Port0	Port0	Port0	Port1
SPI3	Port0	Port1	Port0	Port1	Port0	Port0	Port0	Port1
UART0	Port0	Port1	Port0	Port1	Port0	Port0	Port0	Port1
UART1	Port0	Port1	Port0	Port1	Port0	Port0	Port0	Port1
UART2	Port0	Port1	Port0	Port1	Port0	Port0	Port0	Port1
UART3	Port0	Port1	Port0	Port1	Port0	Port0	Port0	Port1
UART4	Port0	Port1	Port0	Port1	Port0	Port0	Port0	Port1
UART5	Port0	Port1	Port0	Port1	Port0	Port0	Port0	Port1
Timer1	Port0	Port1	Port0	Port1	Port0	Port0	Port0	Port1
Timer2	Port0	Port1	Port0	Port1	Port0	Port0	Port0	Port1
Timer3	Port0	Port1	Port0	Port1	Port0	Port0	Port0	Port1
Timer4	Port0	Port1	Port0	Port1	Port0	Port0	Port0	Port1
Timer5	Port0	Port1	Port0	Port1	Port0	Port0	Port0	Port1
Timer6	Port0	Port1	Port0	Port1	Port0	Port0	Port0	Port1
Timer7	Port0	Port1	Port0	Port1	Port0	Port0	Port0	Port1
Timer8	Port0	Port1	Port0	Port1	Port0	Port0	Port0	Port1
GPIO0	Port0	Port1	Port0	Port1	Port0	Port0	Port0	Port1
GPIO1	Port0	Port1	Port0	Port1	Port0	Port0	Port0	Port1
MMC/SD0/SDIO	Port0	Port1	Port0	Port1	Port0			Port1
MMC/SD1/SDIO	Port0	Port1	Port0	Port1	Port0			Port1
MMC/SD2/SDIO	Port0	Port1	Port0	Port1	Port0			Port1
WDT0	Port0	Port1	Port0	Port1	Port0			Port1
RTC	Port0	Port1	Port0	Port1	Port0			Port1

(1) X, Port0, Port1 = Connection exists.

Copyright © 2011–2013, Texas Instruments Incorporated

Table 5-2. L4 Peripheral Connectivity[(1)] (continued)

L4 PERIPHERALS	MASTERS							
	ARM Cortex-A8 M2 (64-bit)	EDMA TPTC0	EDMA TPTC1	EDMA TPTC2	EDMA TPTC3	C674x CONFIG	System MMU	PCIe
System MMU	Port0	Port1	Port0	Port1	Port0	Port0	Port0	Port1
Mailbox	Port0					Port0	Port0	
Spinlock	Port0					Port0	Port0	
HDVPSS	Port0	Port1	Port0	Port1	Port0			Port1
PLLSS	Port0							Port1
Control/Top Regs (Control Module)	Port0							Port1
PRCM	Port0							Port1
ELM	Port0							Port1
HDMIPHY	Port0							Port1
DCAN0	Port0	Port1	Port0	Port1	Port0			Port1
DCAN1	Port0	Port1	Port0	Port1	Port0			Port1
OCPWP	Port0							Port0
McASP0 CFG	Port0	Port1	Port0	Port1	Port0	Port0	Port0	Port1
McASP1 CFG	Port0	Port1	Port0	Port1	Port0	Port0	Port0	Port1
McASP2 CFG	Port0	Port1	Port0	Port1	Port0	Port0	Port0	Port1
SYNCTIMER32K	Port0	Port1	Port0	Port1	Port0			Port1

Copyright © 2011–2013, Texas Instruments Incorporated

6 Device Operating Conditions

6.1 Absolute Maximum Ratings (1)(2)

Supply voltage ranges (Steady State):	Core (CVDD, CVDD_ARM, CVDD_DSP, CVDD_HDVICP)	-0.3 V to 1.5 V
	I/O, 1.8 V (DVDD_M, DVDD_DDR[0], DVDD_DDR[1], VDDA_1P8, VDDA_ARMPLL_1P8, VDDA_DSPPLL_1P8, VDDA_VID0PLL_1P8, VDDA_VID1PLL_1P8, VDDA_AUDIOPLL_1P8, VDDA_DDRPLL_1P8, VDDA_L3PLL_1P8, VDDA_PCIE_1P8, VDDA_SATA_1P8, VDDA_HDMI_1P8, VDDA_USB0_1P8, VDDA_USB1_1P8, VDDA_VDAC_1P8)	-0.3 V to 2.1 V
	I/O 3.3 V (DVDD, DVDD_GPMC, DVDD_GPMCB, DVDD_SD, DVDD_C)	-0.3 V to 4.0 V
	DDR Reference Voltage (VREFSSTL_DDR[0], VREFSSTL_DDR[1])	-0.3 V to 1.1 V
Input and Output voltage ranges:	V I/O, 1.5-V pins (Steady State)	-0.3 V to DVDD_DDR[x] + 0.3 V
	V I/O, 1.8-V pins (Steady State)	-0.3 V to DVDD + 0.3 V -0.3 V to DVDD_x + 0.3 V
	V I/O, 3.3-V pins (Steady State)	-0.3 V to DVDD + 0.3 V -0.3 V to DVDD_x + 0.3 V
Operating junction temperature range, T_J:	Commercial Temperature	0°C to 90°C
	Industrial	-40°C to 90°C
	Extended	-40°C to 105°C
Storage temperature range, T_{stg}:		-55°C to 150°C
Latch-up Performance:	I-test: Silicon Revision 3.0, All I/O pins (3)	±100 mA
	I-test: Silicon Revision 2.1, All I/O pins (3)	±70 mA
	Over-Voltage Test, All Supply pins (4)	1.5xVddmax V
Electrostatic Discharge (ESD) Performance:	ESD-HBM (Human Body Model) (5)	±1000 V
	ESD-CDM (Charged-Device Model) (6)	±250 V

(1) Stresses beyond those listed under "absolute maximum ratings" may cause permanent damage to the device. These are stress ratings only, and functional operation of the device at these or any other conditions beyond those indicated under "recommended operating conditions" is not implied. Exposure to absolute-maximum-rated conditions for extended periods may affect device reliability.
(2) All voltage values are with respect to their associated VSS or VSSA_x.
(3) Pins stressed per JEDEC JESD78 at 90°C (Class II) and passed with specified I/O pin injection current and clamp voltage of 1.5 times maximum recommended I/O voltage and negative 0.5 times maximum recommended I/O voltage.
(4) Supplies stressed per JEDEC JESD78 at 90°C (Class II) and passed specified voltage injection.
(5) Level listed is the passing level per ANSI/ESDA/JEDEC JS-001. JEDEC document JEP155 states that 500-V HBM allows safe manufacturing with a standard ESD control process, and manufacturing with less than 500-V HBM is possible if necessary precautions are taken. Pins listed as 1000 V may actually have higher performance.
(6) Level listed is the passing level per EIA-JEDEC JESD22-C101E. JEDEC document JEP157 states that 250-V CDM allows safe manufacturing with a standard ESD control process, and manufacturing with less than 250-V CDM is possible if necessary precautions are taken. Pins listed as 250 V may actually have higher performance.

Copyright © 2011–2013, Texas Instruments Incorporated

6.2 Recommended Operating Conditions

PARAMETER			MIN	NOM	MAX	UNIT
CVDD	Supply voltage, Core (Scalable) DVFS only, No AVS	166% OPP	1.28	1.35	1.42	V
		120% OPP	1.14	1.20	1.26	
		100% OPP	1.05	1.10	1.16	
CVDD_ARM	Supply voltage, Core ARM (Scalable) DVFS only, No AVS	166% OPP	1.28	1.35	1.42	V
		120% OPP	1.14	1.20	1.26	
		100% OPP	1.05	1.10	1.16	
CVDD_DSP	Supply voltage, Core, DSP (Scalable) DVFS only, No AVS	166% OPP	1.28	1.35	1.42	V
		120% OPP	1.14	1.20	1.26	
		100% OPP	1.05	1.10	1.16	
CVDD_HDVICP	Supply voltage, Core, HDVICP2 (Scalable) DVFS only, No AVS	166% OPP	1.28	1.35	1.42	V
		120% OPP	1.14	1.20	1.26	
		100% OPP	1.05	1.10	1.16	
DVDD	Supply voltage, I/O, standard pins (1)	3.3 V	3.14	3.3	3.47	V
		1.8 V	1.71	1.8	1.89	
DVDD_GPMC	Supply voltage, I/O, GPMC pin group	3.3 V	3.14	3.3	3.47	V
		1.8 V	1.71	1.8	1.89	
DVDD_GPMCB	Supply voltage, I/O, GPMCB pin group	3.3 V	3.14	3.3	3.47	V
		1.8 V	1.71	1.8	1.89	
DVDD_SD	Supply voltage, I/O, SD pin group	3.3 V	3.14	3.3	3.47	V
		1.8 V	1.71	1.8	1.89	
DVDD_C	Supply voltage, I/O, C pin group	3.3 V	3.14	3.3	3.47	V
		1.8 V	1.71	1.8	1.89	
DVDD_M	Supply voltage, I/O, M pin group	1.8 V	1.71	1.8	1.89	V
DVDD_DDR[0] DVDD_DDR[1]	Supply voltage, I/O, DDR[0] and DDR[1]	DDR2	1.71	1.8	1.89	V
		DDR3 mode	1.43	1.5	1.58	
VDDA_USB_3P3	Supply voltage, I/O, Analog, USB 3.3 V		3.14	3.3	3.47	V
VDDA_1P8 VDDA_x_1P8	Supply Voltage, I/O, Analog, (VDDA_1P8, VDDA_ARMPLL_1P8, VDDA_DSPPLL_1P8, VDDA_VID0PLL_1P8, VDDA_VID1PLL_1P8, VDDA_AUDIOPLL_1P8, VDDA_DDRPLL_1P8, VDDA_L3PLL_1P8, VDDA_PCIE_1P8, VDDA_SATA_1P8, VDDA_HDMI_1P8, VDDA_USB0_1P8, VDDA_USB1_1P8, VDDA_VDAC_1P8) **Note:** HDMI, USB0/1, and VDAC relative to their respective VSSA.		1.71	1.8	1.89	V
VSS	Supply Ground (VSS, VSSA_HDMI, VSSA_USB, VSSA_VDAC, VSSA_DEVOSC (2), VSSA_AUXOSC (2))			0		V
$V_{REFSSTL_DDR[x]}$	IO Reference Voltage, (VREFSSTL_DDR[0], VREFSSTL_DDR[1])		0.49 * DVDD_DDR[x]	0.50 * DVDD_DDR[x]	0.51 * DVDD_DDR[x]	V
USBx_VBUSIN	USBx VBUS Comparator Input		4.75	5	5.25	V
V_{IH}	High-level input voltage, LVCMOS (JTAG[TCK] pins), 3.3 V (1)		2			V
	High-level input voltage, JTAG[TCK], 3.3 V		2.15			V
	High-level input voltage, JTAG[TCK], 1.8 V		1.45			V
	High-level input voltage, I2C (I2C[0] and I2C[1])		0.7DVDD			V
	High-level input voltage, LVCMOS (1), 1.8 V		0.65DVDDx			V

(1) LVCMOS pins are all I/O pins powered by DVDD, DVDD_GPMC, DVDD_GPMCB, DVDD_SD, DVDD_C supplies except for I2C[0] and I2C[1] pins.
(2) When using the internal Oscillators, the oscillator grounds (VSSA_DEVOSC, VSSA_AUXOSC) must be kept separate from other grounds and connected directly to the crystal load capacitor ground.

Copyright © 2011–2013, Texas Instruments Incorporated

Recommended Operating Conditions *(continued)*

PARAMETER			MIN	NOM	MAX	UNIT
V_{IL}	Low-level input voltage, LVCMOS(1), 3.3 V				0.8	V
	Low-level input voltage, JTAG[TCK]				0.45	V
	Low-level input voltage, I2C (I2C[0] and I2C[1])				0.3DVDDx	V
	Low-level input voltage, LVCMOS(1), 1.8 V				0.35DVDDx	V
I_{OH}	High-level output current	6 mA I/O buffers			-6	mA
		DDR[0], DDR[1] buffers @ 50-Ω impedance setting			-8	mA
I_{OL}	Low-level output current	6 mA I/O buffers			6	mA
		DDR[0], DDR[1] buffers @ 50-Ω impedance setting			8	mA
V_{ID}	Differential input voltage (SERDES_CLKN/P), [AC coupled]		0.250		2.0	V
t_t	Transition time, 10% - 90%, All inputs (unless otherwise specified in the *Electrical Data/Timing* sections of each peripheral)				0.25P or 10(3)	ns
T_J	Operating junction temperature range(4)	Commercial Temperature (default)	0		90	°C
		Industrial	-40		90	°C
		Extended	-40		105	°C

(3) Whichever is smaller. P = the period of the applied signal. Maintaining transition times as fast as possible is recommended to improve noise immunity on input signals.
(4) For more detailed information on estimating junction temps within systems, see the *IC Package Thermal Metrics* Application Report (Literature Number: SPRA953).

6.3 Power-On Hours (POH)

The POH information in Table 6-1 is provided solely for convenience and does not extend or modify the warranty provided under TI's standard terms and conditions for TI Semiconductor Products. To avoid significant device degradation, the device POH must be limited to those shown in Table 6-1.

Table 6-1. Power-On Hour Limits

Operating Condition	Nominal CVDD Voltage (V)	Junction Temperature (T_j)	Lifetime POH(1)
100% OPP	1.1	-40 to 105 °C	100K
120% OPP	1.2	-40 to 105 °C	100K
166% OPP	1.35	-40 to 105 °C	49K

(1) POH represent device operation under the specified nominal conditions continuously for the duration of the calculated lifetime.

Logic functions and parameter values are not ensured out of the range specified in Section 6.2, Recommended Operating Conditions.

The above notations cannot be deemed a warranty or deemed to extend or modify the warranty under TI's standard terms and conditions for semiconductor products.

Copyright © 2011–2013, Texas Instruments Incorporated

6.4 Electrical Characteristics Over Recommended Ranges of Supply Voltage and Operating Temperature (Unless Otherwise Noted)

PARAMETER		TEST CONDITIONS[1]	MIN	TYP	MAX	UNIT
V_{OH}	Low/Full speed: USB_DM and USB_DP		2.8		VDD_USB_3P3	V
	High speed: USB_DM and USB_DP		360		440	mV
	High-level output voltage, LVCMOS[2] (3.3-V I/O)	3.3 V, DVDDx = MIN, I_{OH} = MAX	2.4			V
	High-level output voltage, LVCMOS[2] (1.8-V I/O)	1.8 V, DVDDx = MIN, I_{OH} = MAX	1.26			V
V_{OL}	Low/Full speed: USB_DM and USB_DP		0.0		0.3	V
	High speed: USB_DM and USB_DP		-10		10	mV
	Low-level output voltage, LVCMOS[2] (3.3-V I/O)	3.3 V, DVDDx = MAX, I_{OL} = MAX			0.4	V
	Low-level output voltage, LVCMOS[2] (1.8-V I/O)	1.8 V, DVDDx = MAX, I_{OL} = MAX			0.4	V
	Low-level output voltage, I2C (I2C[0], I2C[1])	1.8/3.3 V, I_{OL} = 4mA			0.4	V
	LDOs (applies to all LDOCAP_x pins)				1.5	V
I_I[3]	Input current, LVCMOS[2], 3.3 V mode	0 < V_I < DVDDx, 3.3 V pull disabled	-20		20	µA
		0 < V_I < DVDDx, 3.3 V pulldown enabled[4]	20	100	300	µA
		0 < V_I < DVDDx, 3.3 V pullup enabled[4]	-20	-100	-300	µA
	Input current, LVCMOS[2], 1.8 V mode	0 < V_I < DVDDx, 1.8 V pull disabled	-5		5	µA
		0 < V_I < DVDDx, 1.8 V pulldown enabled[4]	50	100	200	µA
		0 < V_I < DVDDx, 1.8 V pullup enabled[4]	-50	-100	-200	µA
	Input current, I2C (I2C[0], I2C[1])	3.3 V mode	-20		20	µA
		1.8 V mode	-5		5	µA
I_{OZ}[5]	I/O Off-state output current	3.3 V mode, pull enabled	-300		300	µA
		3.3 V mode, pull disabled	-20		20	µA
		1.8 V mode, pull enabled	-200		200	µA
		1.8 V mode, pull disabled	-5		5	µA
I_{CDD}	Core (CVDD) supply current (scalable)		see note [6]			mA
ICVDD_ARM	ARM Core Current (Scalable)		see note [6]			mA
ICVDD_DSP	DSP Core Current (Scalable)		see note [6]			mA
ICVDD_HDVICP	HDVICP2 Core Current (Scalable)		see note [6]			mA

(1) For test conditions shown as MIN, MAX, or TYP, use the appropriate value specified in the recommended operating conditions table.
(2) LVCMOS pins are all I/O pins powered by DVDD, DVDD_GPMC, DVDD_GPMCB, DVDD_SD, DVDD_C supplies except for I2C[0] and I2C[1] pins.
(3) I_I applies to input-only pins and bi-directional pins. For input-only pins, I_I indicates the input leakage current. For bi-directional pins, I_I indicates the input leakage current and off-state (Hi-Z) output leakage current.
(4) Applies only to pins with an internal pullup (IPU) or pulldown (IPD) resistor.
(5) I_{OZ} applies to output-only pins, indicating off-state (Hi-Z) output leakage current.
(6) The actual current draw varies across manufacturing processes and is highly application-dependent. For more details on core and I/O activity, as well as information relevant to board power supply design, see the *TMS320DM814x/AM387x Power Estimation Spreadsheet* Application Report (Literature Number: SPRABO3). To determine the worst-case power consumption values, use the *TMS320DM814x/AM387x Power Estimation Spreadsheet* Application Report.

Copyright © 2011–2013, Texas Instruments Incorporated

Electrical Characteristics Over Recommended Ranges of Supply Voltage and Operating Temperature (Unless Otherwise Noted) *(continued)*

PARAMETER		TEST CONDITIONS[1]	MIN	TYP	MAX	UNIT
I_{DDD}	3.3-V I/O (DVDD, DVDD_GPMC, DVDD_GPMCB, DVDD_SD, DVDD_C, VDDA_USB_3P3) supply current			see note [6]		mA
	1.8-V I/O (DVDD, DVDD_GPMC, DVDD_GPMCB, DVDD_SD, DVDD_C DVDD_M, DVDD_DDR[0], DVDD_DDR[1] [for DDR2], VDDA_x_1P8) supply current			see note [6]		mA
	1.5-V I/O (DVDD_DDR[0], DVDD_DDR[1] [for DDR3 SDRAM]) supply current			see note [6]		mA
C_I	Input capacitance LVCMOS[2]				12	pF
C_o	Output capacitance LVCMOS[2]				12	pF

Copyright © 2011–2013, Texas Instruments Incorporated

7 Power, Reset, Clocking, and Interrupts

7.1 Power, Reset and Clock Management (PRCM) Module

The PRCM module is the centralized management module for the power, reset, and clock control signals of the device. The PRCM interfaces with all the components on the device for power, clock, and reset management through power-control signals. The PRCM module inTiming Requirements for AUD_CLKINxtegrates enhanced features to allow the device to adapt energy consumption dynamically, according to changing application and performance requirements. The innovative hardware architecture allows a substantial reduction in leakage current.

The PRCM module is composed of two main entities:

- Power reset manager (PRM): Handles the power, reset, wake-up management, and system clock source control (oscillator)
- Clock manager (CM): Handles the clock generation, distribution, and management.

For more details on the PRCM, see the *Power, Reset, and Clock Management (PRCM) Module* chapter of the *TMS320DM814x DaVinci Digital Media Processors Technical Reference Manual* (Literature Number: SPRUGZ8).

7.2 Power

7.2.1 Voltage and Power Domains

Every Module within the device belongs to a Core Logic Voltage Domain, Memory Voltage Domain, and a Power Domain (see Table 7-1).

Table 7-1. Voltage and Power Domains

CORE LOGIC VOLTAGE DOMAIN	MEMORY VOLTAGE DOMAIN	POWER DOMAIN	MODULES
ARM_L	ARM_M	ALWAYS ON	ARM Cortex-A8 Subsystem
CORE_L	CORE_M		DCAN0/1, DMM, EDMA, ELM, DDR0/1, EMAC Switch, GPIO Banks 0/1/2/3,GPMC, I2C0/1/2/3, IPC, MCASP0/1/2/3/4/5, MCBSP, OCMC SRAM, PCIE, PRCM, RTC, SATA, SD/MMC0/1/2, SPI01/2/3, Timer1/2/3/4/5/6/7/8, UART0/1/2/3/4/5, USB0/1, WDT0, System Interconnect, JTAG, Media Controller, ISS
		GFX	SGX530
		HDVPSS	HDVPSS, HDMI, SD-DAC
DSP_L	DSP_M	DSP	C674x DSP and L2 SRAM
HDVICP_L	HDVICP_M	HDVICP	HDVICP2

7.2.1.1 Core Logic Voltage Domains

The device contains four Core Logic Voltage Domains. These domains define groups of Modules that share the same supply voltage for their core logic. Each Core Logic Voltage Domain is powered by a dedicated supply voltage rail. Table 7-2 shows the mapping between the Core Logic Voltage Domains and their associated supply pins.

Table 7-2. Core Logic Voltage Domains and Supply Pin Associations

CORE LOGIC VOLTAGE DOMAIN	SUPPLY PIN NAME
ARM_L	CVDD_ARM
CORE_L	CVDD
DSP_L	CVDD_DSP
HDVICP_L	CVDD_HDVICP

Note: A regulated supply voltage ***must*** be supplied to each Core Logic Voltage Domain at all times, regardless of the Core Logic Power Domain states.

7.2.1.2 Memory Voltage Domains

The SRAM within each Device Module is assigned to one of four Memory Voltage Domains. The voltage of each Memory Voltage Domain is independently controlled by internal LDO regulators, which are supplied by the VDDA_1P8 pins.

The voltage level output by each of these LDO regulators is controlled through software by programming the RAMLDO_CTRLx registers in the Control Module. The Memory Voltage Domain voltage must be programmed based on the Core Logic Voltage Domain voltage for that domain (that is, the corresponding Core Logic Voltage Domain for the ARM_M Voltage Domain is ARM_C, and so on). Table 7-3 shows the Memory Voltage Domain voltage requirements.

Table 7-3. Memory Voltage Domain LDO Requirements

CORE LOGIC VOLTAGE DOMAIN VOLTAGE (V)	MEMORY VOLTAGE DOMAIN VOLTAGE (V)
0.83 – 1.20	1.20

7.2.1.3 Power Domains

The device contains six Power Domains which supply power to both the Core Logic and SRAM within their associated modules. Each Power Domain, except for the ALWAYS ON domain, has an internal power switch that can completely remove power from that domain. All power switches are turned "OFF" by default after reset, and software can individually turn them "ON/OFF" via Control Module registers.

Note: All Modules within a Power Domain are unavailable when the domain is powered "OFF". For instructions on powering "ON/OFF" the Power domains, see the *Power, Reset, and Clock Management (PRCM) Module* chapter of the *TMS320DM814x DaVinci Digital Media Processors Technical Reference Manual* (Literature Number: SPRUGZ8).

7.2.2 SmartReflex [Not Supported]

The device contains SmartReflex modules that help to minimize power consumption on the Core Logic Voltage Domains by using external variable-voltage power supplies. Based on the device process, temperature, and desired performance, the SmartReflex modules advise the host processor to raise or lower the supply voltage to each domain for minimal power consumption.

The communication link between the host processor and the external regulators is a system-level decision and can be accomplished using GPIOs, I2C, SPI, or other methods. The following sections briefly describe the two major techniques employed by SmartReflex: Dynamic Voltage Frequency Scaling (DVFS) and Adaptive Voltage Scaling (AVS).

 Copyright © 2011–2013, Texas Instruments Incorporated

7.2.2.1 Dynamic Voltage Frequency Scaling (DVFS)

Each device Core Logic Voltage Domain can be run independently at one of several Operating Performance Points (OPPs). An OPP for a specific Core Logic Voltage Domain is defined by: (1) maximum frequencies of operation for Modules within the Domain and (2) an associated supply voltage range. Trading off power versus performance, OPPs with lower maximum frequencies also have lower voltage ranges for power savings.

The OPP for a domain can be changed in real-time without requiring a reset. This feature is called Dynamic Voltage Frequency Scaling (DVFS). Table 7-4 contains a list of voltage ranges and maximum module frequencies for the OPPs of each Core Logic Voltage Domain.

Table 7-4. Device Operating Points (OPPs)

OPP	CORE LOGIC VOLTAGE DOMAINS								
	ARM	DSP	HDVICP	CORE					
	Cortex A8 (MHz)	DSP (MHz)	HDVICP2 (MHz)	HDVPSS (MHz)	SGX (MHz)	ISS (MHz)	Media Ctlr. (MHz)	L3/L4, Core (MHz)	DDR (MHz)(1)
100% (1.1 V)	600	500	266	200	200	400	200	200	400
120% (1.2 V)	720	600	306	200	250	400	200	220	400
166% (CYE1) (1.35 V)	1000	700 750(2)	410	220	280	480	240	220	533
166% (CYE2) (1.35 V)	1000	750	450	220	280	560	280	220	533

(1) All DDR access ***must*** be suspended prior to changing the DDR frequency of operation.
(2) Only DM814x SR3.0 devices support a DSP Frequency of 750-MHz. For more details on device silicon revisions, see Figure 9-1, *Device Nomenclature*.

Although the OPP for each Core Logic Voltage Domain is independently selectable, not all combinations of OPPs are supported. Table 7-5 marks the supported ARM, DSP, and HDVICP2 OPPs for a given CORE OPP.

Table 7-5. Supported OPP Combinations(1)(2)

CORE	ARM			DSP			HDVICP2		
	OPP166	OPP120	OPP100	OPP166	OPP120	OPP100	OPP166	OPP120	OPP100
OPP166	X			X			X		
OPP120	X	X		X	X		X	X	
OPP100		X	X		X	X		X	X

(1) "X" denotes supported combinations.
(2) The maximum voltage differences between CVDD and any other CVDD_x voltage domain **must** be < 150 mV.

7.2.2.2 Adaptive Voltage Scaling [Not Supported]

As mentioned in Section 7.2.2.1, *Dynamic Voltage Frequency Scaling (DVFS)* above, every OPP has an associated voltage range. Based on the silicon process, temperature, and chosen OPP, the SmartReflex modules guide software in adjusting the Core Logic Voltage Domain supply voltages within these ranges. This technique is called Adaptive Voltage Scaling (AVS). AVS occurs continuously and in real-time, helping to minimize power consumption in response to changing operating conditions.

7.2.3 Memory Power Management

To reduce SRAM leakage, many SRAM blocks can be switched from ACTIVE mode to SHUTDOWN mode. When SRAM is put in SHUTDOWN mode, the voltage supplied to it is automatically removed and all data in that SRAM is lost.

All SRAM located in a switchable power domain (all domains except ALWAYS_ON) automatically enters SHUTDOWN mode whenever its associated power domain goes into the "OFF" state. The SRAM returns to the ACTIVE state when the corresponding Power Domain returns to the "ON" state.

In addition, the following SRAM within the ALWAYS_ON Power Domain can also be independently put into SHUTDOWN by programming the x_MEM_PWRDN registers in the Control Module:

- Media Controller SRAM
- OCMC SRAM

For detailed instructions on powering up/down the various device SRAM, see the *Control Module* chapter of the *TMS320DM814x DaVinci Digital Media Processors Technical Reference Manual* (Literature Number: SPRUGZ8).

7.2.4 SERDES_CLKP and SERDES_CLKN LDO

The SERDES_CLKP and SERDES_CLKN input buffers are powered by an internal LDO which is programmed through the REFCLK_LJCBLDO_CTRL register in the Control Module.

For more information on programming the SERDES_CLKP and SERDES_CLKN LDO, see *PCI Express (PCIe) Module* and *Serial ATA (SATA) Controller* chapters of the *TMS320DM814x DaVinci Digital Media Processors Technical Reference Manual* (Literature Number: SPRUGZ8).

7.2.5 Dual Voltage I/Os

The device supports dual voltages on some of its I/Os. These I/Os are partitioned into the following groups, and each group has its own dedicated supply pins: DVDD, DVDD_GPMC, DVDD_C, and DVDD_SD. The supply voltage for each group can be independently powered with either 1.8 V or 3.3 V.

For the mapping between pins and power groups, see Section 3.2, *Terminal Functions* of the datasheet.

In addition, the I/O voltage on each DDR interface is independently selectable between either 1.5 V or 1.8 V to support various DDR device types. The I/O supplies for each DDR interface are separate and isolated to allow populating different memory types on each interface.

7.2.6 I/O Power-Down Modes

On the device, there are power-down modes available for the following PHYs:

- Video DAC
- DDR
- USB
- HDMI
- PCIE
- SATA

When a PHY controller is in a power domain that is to be turned "OFF", software must configure the corresponding PHY into power-down mode, prior to putting the power domain in the "OFF" state.

 Copyright © 2011–2013, Texas Instruments Incorporated

7.2.7 Standby Mode

The device supports Low-Power Standby Mode as described below.

Standby Mode is defined as a state in which:

- All switchable power domains are in "OFF" state
- The ARM Cortex-A8 is executing an IDLE loop at its lowest frequency of operation
- All functional blocks not needed for a given application are clock gated

For detailed instructions on entering and exiting from Standby Mode see the *Power, Reset, and Clock Management (PRCM) Module* chapter of the *TMS320DM814x DaVinci Digital Media Processors Technical Reference Manual* (Literature Number: SPRUGZ8).

7.2.8 Supply Sequencing

The device power supplies are organized into four Supply Sequencing Groups:

1. All CVDD supplies (CVDD, CVDD_x)
2. All 1.5-/1.8-V DVDD_DDR[x] Supplies (1.5 V for DDR3, 1.8 V for DDR2)
3. All 1.8-V Supplies (DVDD_x, DVDD_M, VDDA_x_1P8, VDDA_1P8)
4. All 3.3-V Supplies (DVDD, DVDD_x, DVDD_C, VDDA_x_3P3)

To ensure proper device operation, a specific power-up and power-down sequence must be followed. Some TI power-supply devices include features that facilitate these power sequencing requirements — for example, TI's TPS659113 integrated PMIC. For more information on TI power supplies and their features, visit www.ti.com/processorpower.

For more detailed information on the actual power supply names and their descriptions, see Table 3-49, *Supply Voltages Terminal Functions*.

7.2.8.1 Power-Up Sequence

For proper device operation, the following power-up sequence in Table 7-6 and ***must*** be followed.

Table 7-6. Power-Up Sequence Ramping Values

NO.	DESCRIPTION	MIN	MAX	UNIT
1	1.8 V and DVDD_DDR[x] supplies stable to 3.3 V supplies ramp start	0		ms
2	1.8 V supplies to 1.5-/1.8- V DVDD_DDR[x] supplies	0 (1)		ms
3	1.8 V supplies stable to CVDD, CVDD_x variable supplies ramp start	0 (1)		ms
13	CVDD variable supply ramp start to CVDD_x variable supplies ramp start	0		ms
4	All supplies valid to power-on-reset ($\overline{\text{POR}}$ high)	4 096		Master Clocks

(1) The 1.8 V supplies ***must*** be ≥ 1.5-/1.8-V DVDD_DDR[x] supplies.

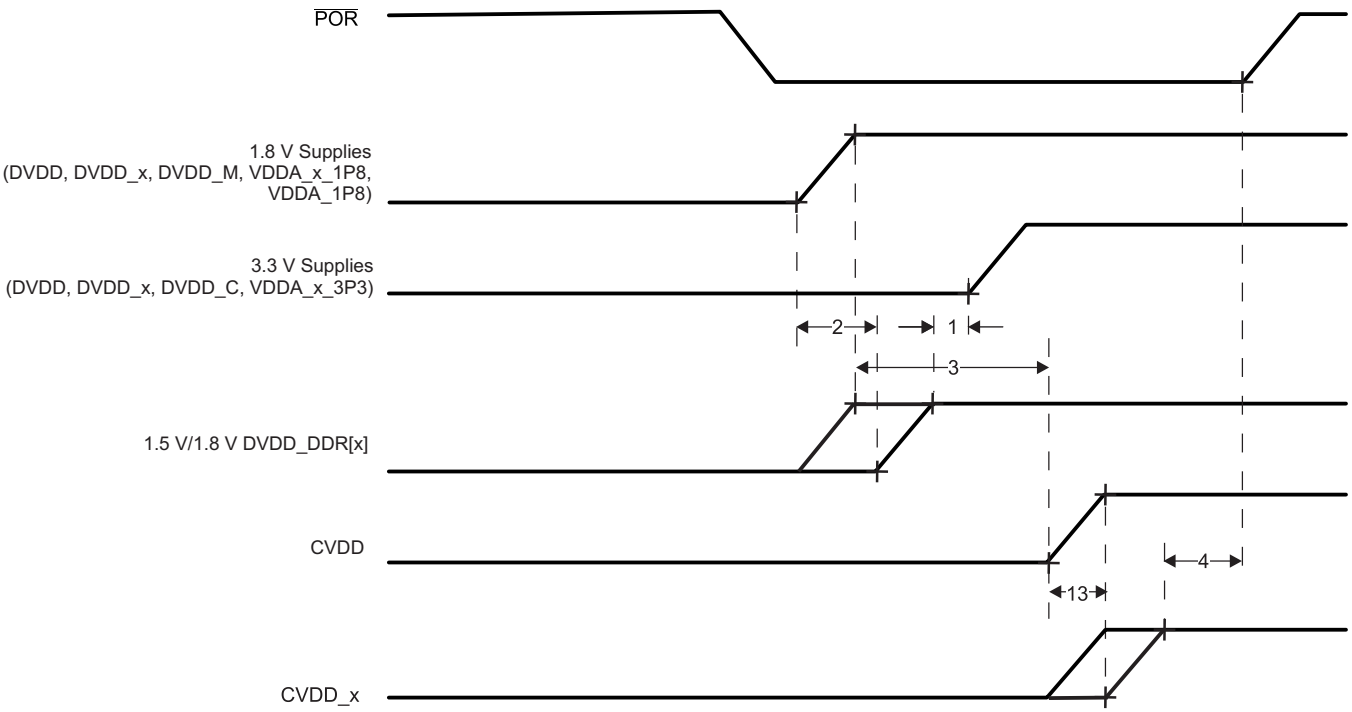

Figure 7-1. Power-Up Sequence

7.2.8.2 Power-Down Sequence

For proper device operation, the following power-down sequence in Table 7-7 and Figure 7-2 ***must*** be followed. Ramping down all supplies at the same time is allowed, provided the requirements in Table 7-7 are met.

Table 7-7. Power-Down Sequence Ramping Values

NO.	DESCRIPTION	MIN	MAX	UNIT
8	CVDD, CVDD_x variable supply to 1.8 V supplies	See (1)	See (1)	ms
9	1.5-/1.8-V DVDD_DDR[x] supplies to 1.8 V supplies	See (1)	See (1)	ms
10	3.3 V supplies to 1.8 V supplies	See (2)	See (2)	ms
14	CVDD_x variable supplies ramp-down start to CVDD variable supply ramp-down start	0		ms

(1) The 1.5-/1.8-V DVDD_DDR[x] and CVDD, CVDD_x variable supplies can be powered down prior to or simultaneously with the 1.8-V supplies.
(2) The 3.3 V supplies ***must*** never be more than 2 V above the 1.8 V supplies (see Figure 7-3).

Copyright © 2011–2013, Texas Instruments Incorporated

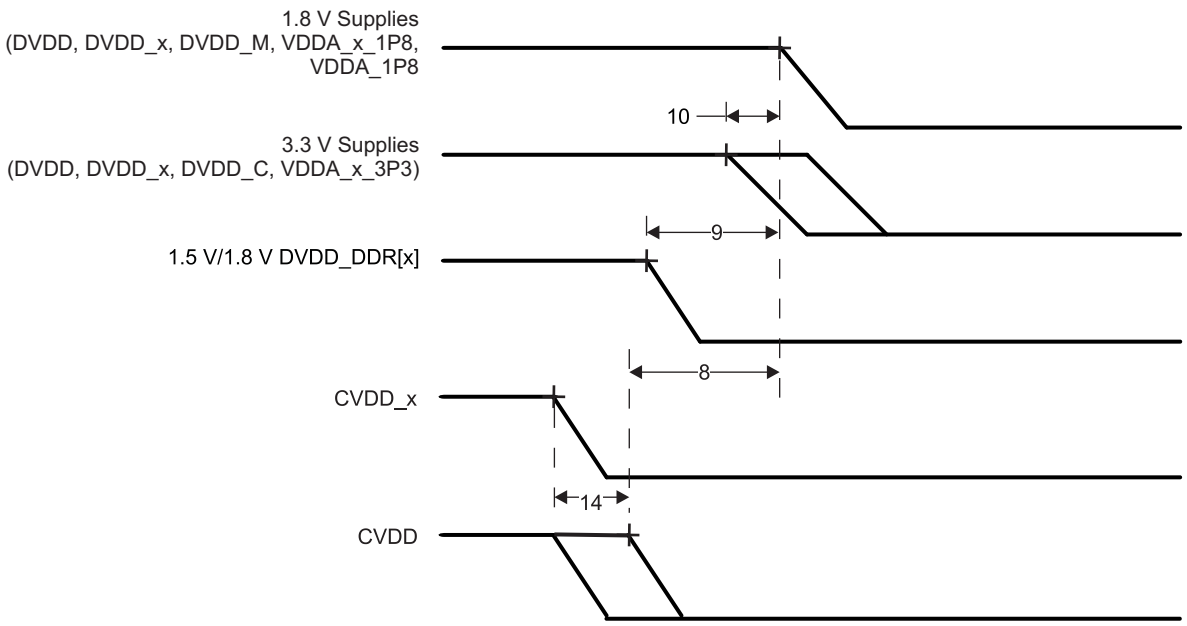

Figure 7-2. Power-Down Sequence

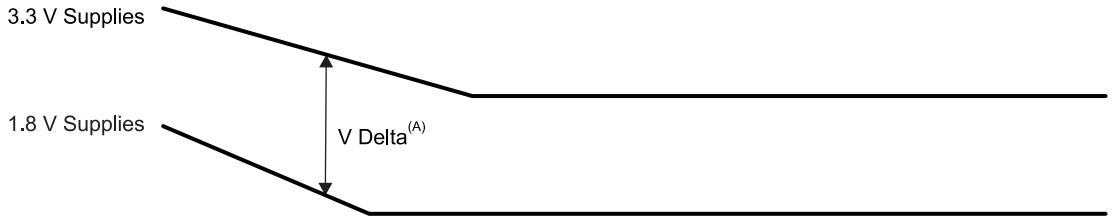

Figure 7-3. 1.8 V Supplies Falling Before 3.3 V Supplies Delta

7.2.9 Power-Supply Decoupling

7.2.9.1 Analog and PLL

PLL and Analog supplies benefit from filters or ferrite beads to keep the noise from causing problems. The minimum recommendation is a ferrite bead along with at least one capacitor on the device side of the bead. An additional recommendation is to add one capacitor just before the bead to form a Pi filter. The filter needs to be as close as possible to the device pin, with the device side capacitor being the most important component to be close to the device pin. PLL pins close together can be combined on the same supply, but analog pins should all have their own filters. PLL pins farther away from each other may need their own filtered supply.

7.2.9.2 Digital

Recommended capacitors for power supply decoupling are all 0.1uF in the smallest body size that can be used. Capacitors are more effective in the smallest physical size to limit lead inductance. For example, 0201 sized capacitors are better than 0402 sized capacitors, and so on. TI recommends using capacitors no larger than 0402. Place at least one capacitor for every two power pins. For those power pins that have only one pin, a capacitor is still required. Place one bulk (10 uF or larger) capacitor for every 10 or so power pins as closely as possible to the chip. These larger caps do not need to be under the chip footprint.

Pay special attention not to put so much capacitance on the supply that it slows the start-up voltage ramp enough to change the power sequencing order. Also be sure to verify that the main chip reset is low until after all supplies are at their correct voltage and stable.

DDR peripheral related supply capacitor numbers are provided in Section 8.13, *DDR2/DDR3 Memory Controller*.

Copyright © 2011–2013, Texas Instruments Incorporated

7.3 Reset

7.3.1 System-Level Reset Sources

The device has several types of system-level resets. Table 7-8 lists these reset types, along with the reset initiator, and the effects of each reset on the device.

Table 7-8. System-Level Reset Types

TYPE	INITIATOR	RESETS ALL MODULES, EXCLUDING EMAC SWITCH, EMULATION, PLL AND CLOCK CONFIG	RESETS EMAC SWITCH	RESETS EMULATION	PLL AND CLOCK CONFIG	LATCHES BOOT PINS	ASSERTS RSTOUT_WD_OUT PIN
Power-on Reset (POR)	POR pin	Yes	Yes	Yes	Yes	Yes	Optional(1)(2)
External Warm Reset	RESET pin	Yes	Optional(3)	No	No	Yes	Optional(1)(2)
Emulation Warm Reset	On-Chip Emulation Logic	Yes	Optional(3)	No	No	No	Optional(1)
Watchdog Reset	Watchdog Timer	Yes	Optional(3)	No	No	No	Yes
Software Global Cold Reset	Software	Yes	Optional(3)	Yes	Yes	No	Optional(1)
Software Global Warm Reset	Software	Yes	Optional(3)	No	No	No	Optional(1)
Test Reset	TRST pin	No	No	Yes	No	No	No

(1) RSTOUT_WD_OUT pin asserted only if BTMODE[11] was latched as "0" when coming out of reset.
(2) While POR and/or RESET is asserted, the RSTOUT_WD_OUT pin is 3-stated and the internal pull resistor is disabled; therefore, an external pullup/pulldown can be used to set the state of this pin (high/low) while POR and/or RESET is asserted. For more detailed information on external PUs/PDs, see Section 4.5.1, *Pullup/Pulldown Resistors*.
(3) EMAC Switch is NOT reset when the ISO_CONTROL bit in the RESET_ISO Control Module register is set to "1".

7.3.2 Power-on Reset (POR pin)

Power-on Reset (POR) is initiated by the POR pin and is used to reset the entire chip, including the Test and Emulation logic, and the EMAC Switch. POR is also referred to as a cold reset since it is required to be asserted when the device goes through a power-up cycle. However, a device power-up cycle is not required to initiate a Power-on Reset.

The following sequence ***must*** be followed during a Power-on Reset:

1. Wait for the power supplies to reach normal operating conditions while keeping the POR pin asserted.
2. Wait for the input clock sources DEV_CLKIN, AUX_CLKIN, and SERDES_CLKN/P to be stable (if used by the system) while keeping the POR pin asserted (low).
3. Once the power supplies and the input clock sources are stable, the POR pin must remain asserted (low) [see Section 7.3.18, *Reset Electrical Data/Timing*]. Within the low period of the POR pin, the following happens:
   (a) All pins except Emulation pins enter a Hi-Z mode and the associated pulls, if applicable, will be enabled.
   (b) The PRCM asserts reset to all modules within the device.
   (c) The PRCM begins propagating these clocks to the chip with the PLLs in BYPASS mode.
4. The POR pin may now be de-asserted (driven high). When the POR pin is de-asserted (high):
   (a) The BTMODE[15:0] pins are latched.
   (b) Reset to the ARM Cortex-A8 and Modules without a local processor is de-asserted.
   (c) RSTOUT_WD_OUT is briefly asserted if BTMODE[11] was latched as "0".
   (d) The clock, reset, and power-down state of each peripheral is determined by the default settings of the PRCM.
   (e) The ARM Cortex-A8 begins executing from the Boot ROM.

7.3.3 External Warm Reset ($\overline{\text{RESET}}$ pin)

An external warm reset is activated by driving the $\overline{\text{RESET}}$ pin active-low. This resets everything in the device, except for the Test and Emulation logic, and the EMAC Switch (optional). An emulator session stays alive during warm reset.

The following sequence ***must*** be followed during a warm reset:

1. Power supplies and input clock sources should already be stable.
2. The $\overline{\text{RESET}}$ pin must be asserted (low)[see Section 7.3.18, *Reset Electrical Data/Timing*]. Within the low period of the $\overline{\text{RESET}}$ pin, the following happens:
   (a) All pins, except Test and Emulation pins, enter a Hi-Z mode and the associated pulls, if applicable, will be enabled.
   (b) The PRCM asserts reset to all modules within the device, except for the Test and Emulation logic, EMAC Switch (optional), PLL, and Clock configuration.
3. The $\overline{\text{RESET}}$ pin may now be de-asserted (driven high). When the $\overline{\text{RESET}}$ pin is de-asserted (high):
   (a) The BTMODE[15:0] pins are latched.
   (b) Reset to the ARM Cortex-A8 and modules without a local processor is de-asserted, with the exception of Test and Emulation logic, EMAC Switch (optional), PLL, and Clock configuration.
   (c) $\overline{\text{RSTOUT_WD_OUT}}$ is asserted [see Section 7.3.18, *Reset Electrical Data/Timing*], if BTMODE[11] was latched as "0".
   (d) The clock, reset, and power-down state of each peripheral is determined by the default settings of the PRCM.
   (e) The ARM Cortex-A8 begins executing from the Boot ROM.

7.3.4 Emulation Warm Reset

An Emulation Warm Reset is activated by the on-chip Emulation Module and has the same effect and requirements as an External Warm Reset ($\overline{\text{RESET}}$), with the following exceptions:

- BTMODE[15:0] pins are not re-latched
- $\overline{\text{RSTOUT_WD_OUT}}$ is not 3-stated and is actively driven based on the value previously latched on the BTMODE[11] pin.

The emulator initiates an Emulation Warm Reset via the ICEPICK module. To invoke the Emulation Warm Reset via the ICEPICK module, the user can perform the following from the Code Composer Studio™ IDE menu: Target -> Reset -> System Reset.

7.3.5 Watchdog Reset

A Watchdog Reset is initiated when the Watchdog Timer counter reaches zero and has the same effect and requirements as an External Warm Reset ($\overline{\text{RESET}}$ pin), with the following exceptions:

- BTMODE[15:0] pins are not re-latched
- $\overline{\text{RSTOUT_WD_OUT}}$ is not 3-stated and is actively driven based on the value previously latched on the BTMODE[11] pin.

In addition, a Watchdog Reset always results in $\overline{\text{RSTOUT_WD_OUT}}$ being asserted, regardless of whether the BTMODE[11] pin was latched as "0" or "1".

7.3.6 Software Global Cold Reset

A Software Global Cold Reset is initiated under software control and has the same effect and requirements as a $\overline{\text{POR}}$ Reset, with the following exceptions:

- BTMODE[15:0] pins are not re-latched and EMAC Switch (optional) is not reset
- $\overline{\text{RSTOUT_WD_OUT}}$ is not 3-stated and is actively driven based on the value previously latched on the BTMODE[11] pin.

Copyright © 2011–2013, Texas Instruments Incorporated

Software initiates a Software Global Cold Reset by writing a "1" to the RST_GLOBAL_COLD_SW bit in the PRM_RSTCTRL register in the PRCM.

For more detailed information on the PRM_RSTCTRL register, see the PRCM Registers section of the *Power, Reset, and Clock Management (PRCM) Module* chapter of the *TMS320DM814x DaVinci Digital Media Processors Technical Reference Manual* (Literature Number: SPRUGZ8).

7.3.7 Software Global Warm Reset

A Software Global Warm Reset is initiated under software control and has the same effect and requirements as a External Warm Reset ($\overline{\text{RESET}}$ pin), with the following exceptions:

- BTMODE[15:0] pins are not re-latched
- $\overline{\text{RSTOUT_WD_OUT}}$ is not 3-stated and is actively driven based on the value previously latched on the BTMODE[11] pin.

Software initiates a Software Global Warm Reset by writing a "1" to the RST_GLOBAL_WARM_SW bit in the PRM_RSTCTRL register in the PRCM.

For more detailed information on the PRM_RSTCTRL register, see the PRCM Registers section of the *Power, Reset, and Clock Management (PRCM) Module* chapter of the *TMS320DM814x DaVinci Digital Media Processors Technical Reference Manual* (Literature Number: SPRUGZ8).

7.3.8 Test Reset ($\overline{\text{TRST}}$ pin)

A Test Reset is activated by the emulator asserting the $\overline{\text{TRST}}$ pin. The only effect a Test Reset has is to reset the Test and Emulation Logic.

7.3.9 Local Reset

The Local Reset for various Modules within the device is controlled by programming the PRCM and/or the Peripheral Module's internal registers. Only the associated Module is reset when a Local Reset is asserted, leaving the rest of the device unaffected.

For more details on Peripheral Local Resets, see the Reset Management section of the *Power, Reset, and Clock Management (PRCM) Module* chapter of the *TMS320DM814x DaVinci Digital Media Processors Technical Reference Manual* (Literature Number: SPRUGZ8).

7.3.10 Reset Priority

If any of the above reset sources occur simultaneously, the device only processes the highest-priority reset request. The reset request priorities, from high-to-low, are as follows:

1. Power-on Reset ($\overline{\text{POR}}$)
2. Test Reset ($\overline{\text{TRST}}$)
3. External Warm Reset ($\overline{\text{RESET}}$ pin)
4. Emulation Warm Resets
5. Watchdog Reset
6. Software Global Cold/Warm Resets

7.3.11 Reset Status Register

The Reset Status Register (PRM_RSTST) contains information about the last reset that occurred in the system. For more information on this register, see the *Power, Reset, and Clock Management (PRCM) Module* chapter of the *TMS320DM814x DaVinci Digital Media Processors Technical Reference Manual* (Literature Number: SPRUGZ8).

7.3.12 PCIE Reset Isolation

The device supports reset isolation for the PCI Express (PCIE) module. This means that the PCI Express Subsystem can be reset without resetting the rest of the device.

When the devcie is a PCI Express Root Complex (RC), the PCIE Subsystem can be reset by software through the PRCM. Software should ensure that there are no ongoing PCIE transactions before asserting this reset by first taking the PCIE Subsystem into the IDLE state. After bringing the PCIE Subsystem out of reset, bus enumeration should be performed again and should treat all Endpoints (EP) as if they had just been connected.

When the device is a PCI Express Endpoint (EP), the PCIE Subsystem will generate an interrupt when an in-band reset is received. Software should process this interrupt by putting the PCIE Subsystem in the IDLE state and then asserting the PCIE local reset through the PRCM.

All device level resets mentioned in the previous sections, except Test Reset, will also reset the PCIE Subsystem. Therefore, the PCIE peripheral should issue a Hot Reset to all downstream devices and re-enumerate the bus upon coming out of reset.

For more detailed information on reset isolation procedures, see the PCIe Reset Isolation section of the *Power, Reset, and Clock Management (PRCM) Module* chapter of the *TMS320DM814x DaVinci Digital Media Processors Technical Reference Manual* (Literature Number: SPRUGZ8).

7.3.13 EMAC Switch Reset Isolation

The device supports reset isolation for the Ethernet Switch (EMAC Switch). This allows the device to undergo all resets listed in Section 7.3.1, *System-Level Reset Sources*, with the exception of $\overline{\text{POR}}$ Reset, without disrupting the Ethernet Switch or the traffic being routed through the switch during the reset condition. The following reset types can optionally provide an EMAC Switch reset isolation by setting the ISO_CONTROL bit in the RESET_ISO Control Module register to a "1":

- External Warm Reset
- Emulation Warm Reset
- Watchdog Reset
- Software Global Cold Reset
- Software Global Warm Reset

When one of above resets occurs and the Ethernet Switch (EMAC Switch) is programmed to be isolated:

- The switch function of the EMAC Switch and the PLL embedded in the SATA SERDES Module (which provides the reference clocks to the EMAC Switch) will not be reset.
- Several Control Module registers are not reset. For more details, see the description of the RESET_ISO register in the *Control Module* chapter of the *TMS320DM814x DaVinci Digital Media Processors Technical Reference Manual* (Literature Number: SPRUGZ8).
- The pin multiplexing of some of the EMAC Switch pins is unaffected. For more details, see the description of the RESET_ISO register in the *Control Module* chapter of the *TMS320DM814x DaVinci Digital Media Processors Technical Reference Manual* (Literature Number: SPRUGZ8).

The EMAC Switch is always reset when:

- One of the above resets occurs and the Ethernet Switch is programmed to be “not isolated”
- A $\overline{\text{POR}}$ Reset occurs

 Copyright © 2011–2013, Texas Instruments Incorporated

7.3.14 $\overline{\text{RSTOUT_WD_OUT}}$ Pin

The $\overline{\text{RSTOUT_WD_OUT}}$ pin reflects device reset status and is de-asserted (high) when the device is out reset. This output will always be asserted when a Watchdog Timer reset (Watchdog Reset) occurs. In addition, this output is always 3-stated and the internal pull resistor is disabled on this pin while $\overline{\text{POR}}$ and/or $\overline{\text{RESET}}$ is asserted; therefore, an external pullup/pulldown can be used to set the state of this pin (high/low) while $\overline{\text{POR}}$ and/or $\overline{\text{RESET}}$ is asserted. For more detailed information on external PUs/PDs, see Section 4.5.1, *Pullup/Pulldown Resistors*.

If the BTMODE[11] pin is latched as a "0" at the rising edge of $\overline{\text{POR}}$ or $\overline{\text{RESET}}$, then $\overline{\text{RSTOUT_WD_OUT}}$ is also asserted when any of the below resets occur:

- Power-On Reset (asserted after the BTMODE[11] pin is latched)
- External Warm Reset (asserted after the BTMODE[11] pin is latched)
- Emulation Warm Reset
- Software Global Cold/Warm Reset

The $\overline{\text{RSTOUT_WD_OUT}}$ pin remains asserted until the PRCM releases the host ARM Cortex-A8 processor for reset.

7.3.15 Effect of Reset on Emulation and Trace

The device Emulation and Trace Logic will only be reset by the following sources:

- Power-On Reset
- Software Global Cold Reset
- Test Reset

Other than these three reset types, none of the other resets will affect the Emulation and Trace Logic. However, the multiplexing of the EMU[4:2] pins is reset by all system reset types except Test Reset.

7.3.16 Reset During Power Domain Switching

Each Power Domain has a dedicated Warm Reset and Cold Reset. Warm Reset for a Power Domain is asserted under either of the following two conditions:

1. An External Warm Reset, Emulation Warm Reset, or Software Global Warm Reset occurs
2. When that Power Domain switches from the "ON" state to the "OFF" state

Cold Reset for a Power Domain is asserted under either of the following two conditions:

1. Power-On Reset or Software Global Cold Reset occurs
2. When that Power Domain switches from the "OFF" state to the "ON" state

7.3.17 Pin Behaviors at Reset

When any reset, other than Test Reset, (all described in Section 7.3.1, *System-Level Reset Sources*) is asserted, all device I/O pins are reset into a Hi-Z state except for:

- Emulation Pins. These pins are only put into a Hi-Z state when Test Reset ($\overline{\text{TRST}}$) is asserted.
- EMAC Switch Pins. These pins are always put into a Hi-Z state during Power-On Reset. However, some EMAC Switch pins will ***not*** be put into a Hi-Z state during the other reset modes when the ISO_CONTROL bit in the RESET_ISO register of the Control Module is programmed as a "1". For more details, see the description of the RESET_ISO register in the *Control Module* chapter of the *TMS320DM814x DaVinci Digital Media Processors Technical Reference Manual* (Literature Number: SPRUGZ8).
- $\overline{\text{RSTOUT_WD_OUT}}$ Pin during any reset types except for $\overline{\text{POR}}$ and $\overline{\text{RESET}}$. For more detailed information on $\overline{\text{RSTOUT_WD_OUT}}$ pin behavior, see Section 7.3.14, *$\overline{\text{RSTOUT_WD_OUT}}$ Pin*.

- DDR[0]/[1] Address/Control Pins (CLK, $\overline{CLK}$, CKE, $\overline{WE}$, $\overline{CS}$[1]/[0], $\overline{RAS}$, $\overline{CAS}$, $\overline{ODT}$[1]/[0], RST, BA[2:0], A[14:0]). These pins are 3-stated during reset. However, these pins are then driven to the same value as their internal pull resistor reset value when reset is released (For the direction of the internal pull during reset, see the DDR[0]/[1] Terminal Functions tables in the Section 3.2.4, *DDR2/DDR3 Memory Controller* of this document).

In addition, the PINCNTL registers, which control pin multiplexing, enabling the IPUs/IPDs, and enabling the receiver, are reset to their default state. Again, enabling the EMAC Switch reset isolation prevents some PINCNTL registers from being reset.

For details on EMAC Switch reset isolation, see the descriptions of the RESET_ISO register and the PINCNTL registers in the *Control Module* chapter of the *TMS320DM814x DaVinci Digital Media Processors Technical Reference Manual* (Literature Number: SPRUGZ8).

Internal pull-up/down (IPU/IPD) resistors are enabled during and immediately after reset as described in Section 3.2, *Terminal Functions* of this document.

NOTE

Upon coming out of reset, the ARM Cortex-A8 starts executing code from the internal Boot ROM. The Boot ROM code modifies the PINCNTLx registers to configure the associated pins for the chosen primary and backup Bootmodes. For more details on the Boot ROM effects on pin multiplexing, see the *ROM Code Memory and Peripheral Booting* and *Control Module* chapters of the *TMS320DM814x DaVinci Digital Media Processors Technical Reference Manual* (Literature Number: SPRUGZ8).

7.3.18 Reset Electrical Data/Timing

Table 7-9. Timing Requirements for Reset (see Figure 7-4 and Figure 7-5)

NO.				OPP100 MIN	OPP100 MAX	UNIT
1	$t_{w(RESET)}$	Pulse duration, $\overline{POR}$ low or $\overline{RESET}$ low		12P (1)		ns
2	$t_{su(BOOT)}$	Setup time, BTMODE[15:0] pins valid before $\overline{POR}$ high or $\overline{RESET}$ high	$\overline{POR}$	2P (2)		ns
			$\overline{RESET}$	2P (2)		ns
3	$t_{h(BOOT)}$	Hold time, BTMODE[15:0] pins valid after $\overline{POR}$ high or $\overline{RESET}$ high		0		ns

(1) The device clock source ***must*** be stable and at a valid frequency prior to meeting the $t_{w(RESET)}$ requirement.
(2) P = 1/(DEV Clock) frequency in ns.

Table 7-10. Switching Characteristics Over Recommended Operating Conditions During Reset (see Figure 7-5)

NO.	PARAMETER			OPP100 MIN	OPP100 MAX	UNIT
4	$t_{d(RSTL-IORST)}$	Delay time, $\overline{RESET}$ low or $\overline{POR}$ low to all I/Os entering their reset state			14	ns
5	$t_{d(RSTH-IOFUNC)}$	Delay time, $\overline{RESET}$ high or $\overline{POR}$ high to all I/Os exiting their reset state			14	ns
6	$t_{d(RSTH-RSTOUTH)}$	Delay time, $\overline{RESET}$ high to $\overline{RSTOUT_WD_OUT}$ high (1)(2)	$\overline{RESET}$ assertion $t_{w(RESET)}$ ≥ 30P	0	2P	ns
			$\overline{RESET}$ assertion $t_{w(RESET)}$ < 30P	0	32P - $t_{w(RESET)}$	ns
7	$t_{d(PORH-RSTOUTH)}$	Delay time, $\overline{POR}$ high to $\overline{RSTOUT_WD_OUT}$ high (1)(2)		0	12500P	ns
8	$t_{d(RSTL-RSTOUTZ)}$	Delay time, $\overline{RESET}$ low to $\overline{RSTOUT_WD_OUT}$ Hi-Z (1)(2)		0	2P	ns

(1) For more detailed information on $\overline{RSTOUT_WD_OUT}$ pin behavior, see Section 7.3.14, *$\overline{RSTOUT_WD_OUT}$ Pin*.
(2) P = 1/(DEV Clock) frequency in ns.

Copyright © 2011–2013, Texas Instruments Incorporated

Table 7-10. Switching Characteristics Over Recommended Operating Conditions During Reset (see Figure 7-5) (continued)

NO.	PARAMETER		OPP100		UNIT
			MIN	MAX	
9	$t_{d(PORH-RSTOUTL)}$	Delay time, $\overline{POR}$ high to $\overline{RSTOUT_WD_OUT}$ driven based on latched BTMODE[11] value(1)(2)	0	2P	ns
10	$t_{d(RSTH-RSTOUTD)}$	Delay time, $\overline{RESET}$ high to $\overline{RSTOUT_WD_OUT}$ driven based on latched BTMODE[11] value(1)(2)	0	2P	ns

Figure 7-4 shows the Power-Up Timing. Figure 7-5 shows the Warm Reset ($\overline{RESET}$) Timing. Max Reset Timing is identical to Warm Reset Timing, except the BTMODE[15:0] pins are ***not*** re-latched.

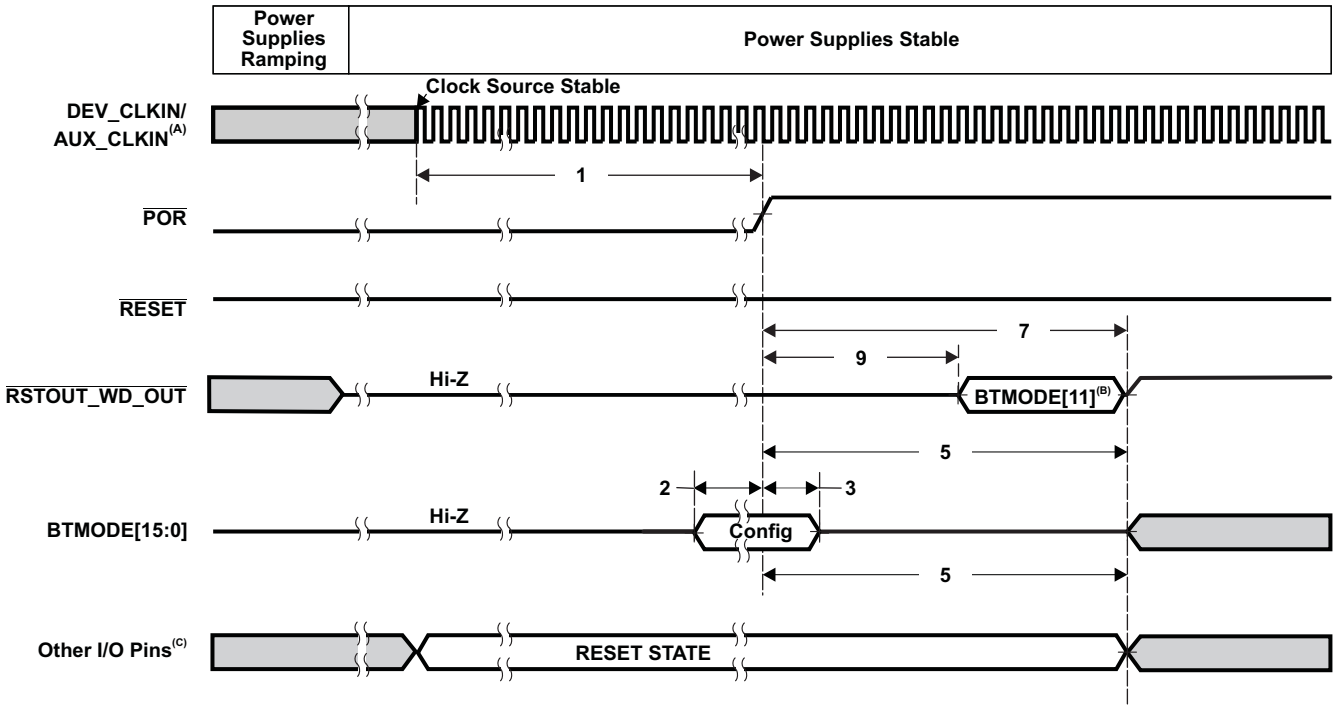

A. Power supplies and DEV_CLKIN/AUX_CLKIN must be stable before the start of $t_{w(RESET)}$.
B. $\overline{RSTOUT_WD_OUT}$ only asserted if BTMODE[11] was latched as a "0" when coming out of reset.
C. For more detailed information on the RESET STATE of each pin, see Section 7.3.17, *Pin Behaviors at Reset*. Also see Section 3.2, *Terminal Functions* for the IPU/IPD settings during reset.

Figure 7-4. Power-Up Timing

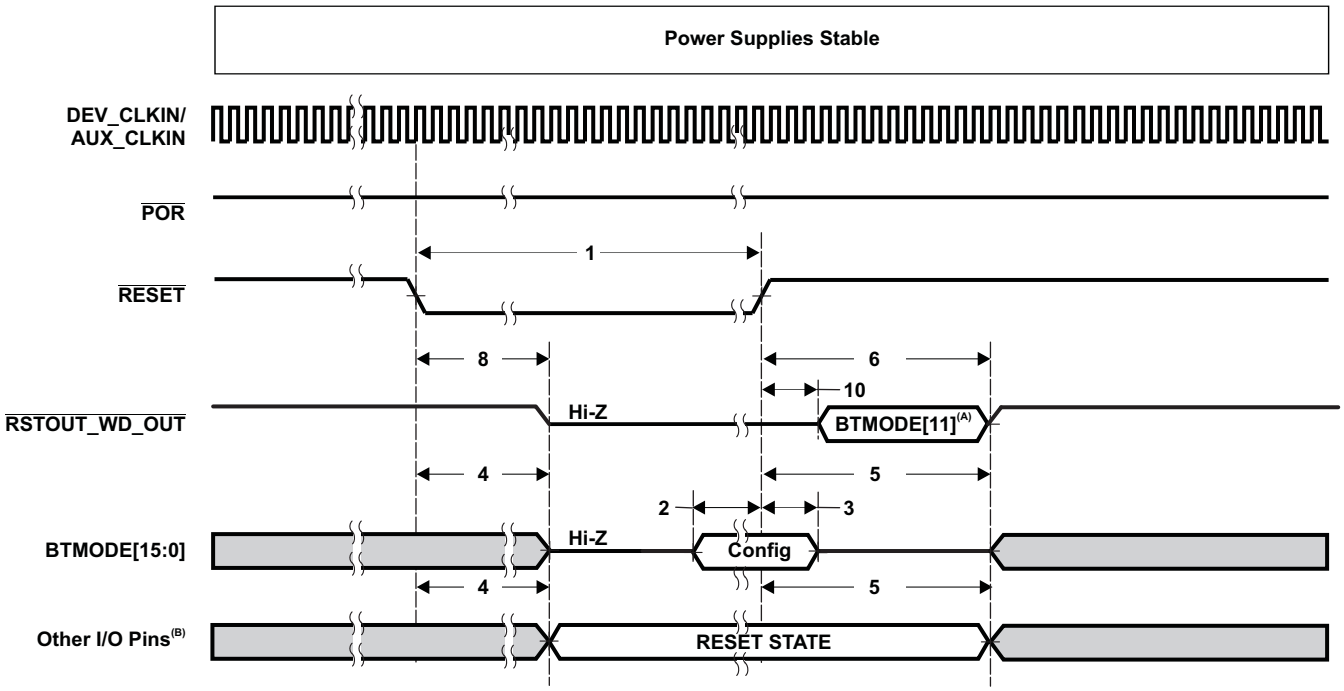

A. RSTOUT_WD_OUT only asserted if BTMODE[11] was latched as a "0" when coming out of reset.

B. For more detailed information on the RESET STATE of each pin, see Section 7.3.17, *Pin Behaviors at Reset*. Also see Section 3.2, *Terminal Functions* for the IPU/IPD settings during reset.

Figure 7-5. Warm Reset (RESET) Timing

Copyright © 2011–2013, Texas Instruments Incorporated

7.4 Clocking

The device clocks are generated from several reference clocks that are fed to on-chip PLLs and dividers (both inside and outside of the PRCM Module). Figure 7-6 shows a high-level overview of the device system clocking structure (Note: to reduce complexity, not all clocking connections are shown). For detailed information on the device clocks, see the Clock Generation and Management section of the *Power, Reset, and Clock Management (PRCM) Module* chapter of the *TMS320DM814x DaVinci Digital Media Processors Technical Reference Manual* (Literature Number: SPRUGZ8).

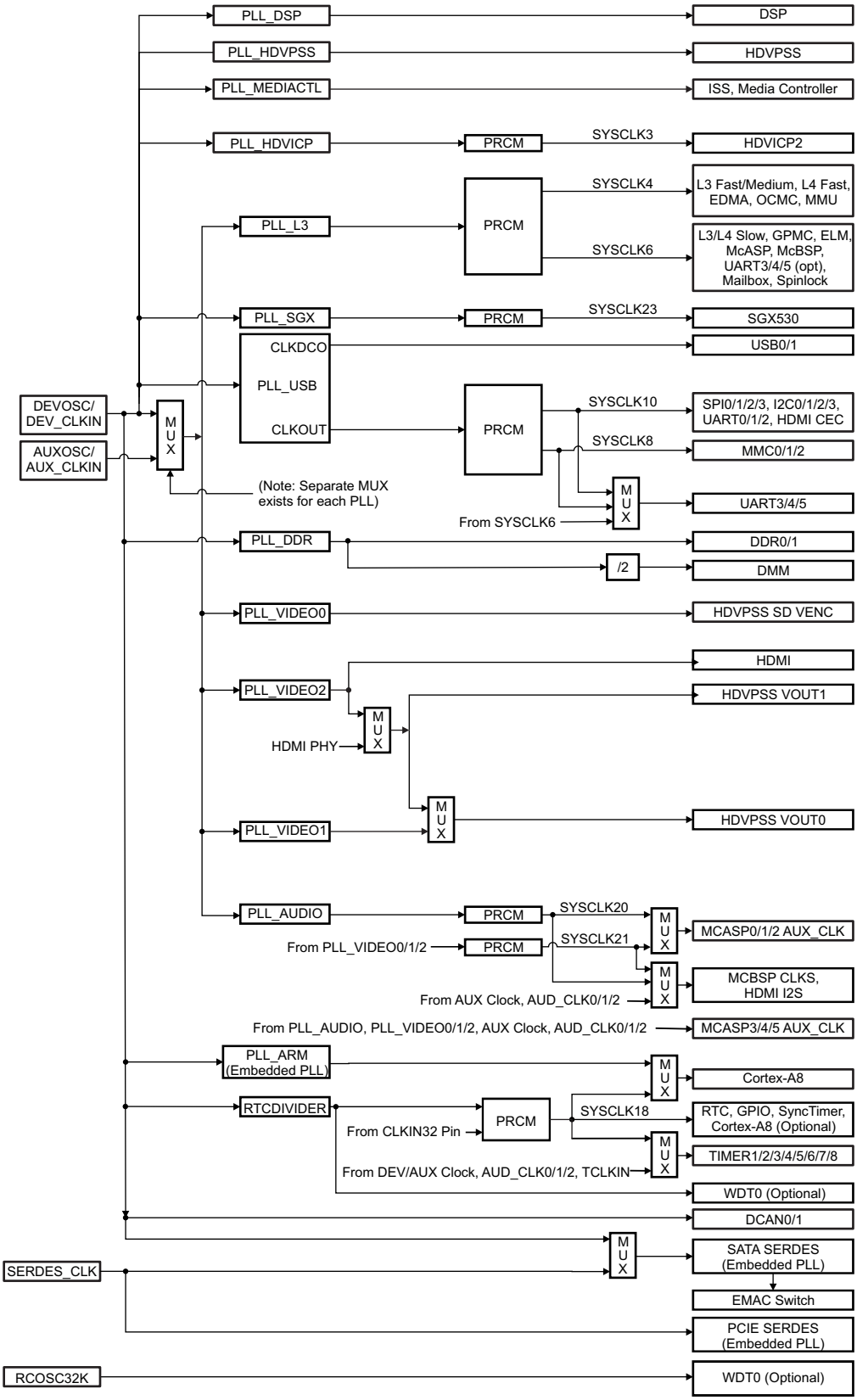

Figure 7-6. System Clocking Overview

Copyright © 2011–2013, Texas Instruments Incorporated

7.4.1 Device (DEV) and Auxiliary (AUX) Clock Inputs

The device provides two clock inputs, Device (DEVOSC_MXI/DEV_CLKIN) and Auxiliary (AUXOSC_MXI/AUX_CLKIN). The Device (DEV) clock is used to generate the majority of the internal reference clocks, while the Auxiliary (AUX) clock can optionally be used as a source for the Audio and/or Video PLLs.

The DEV and AUX clocks can be sourced in two ways:

1. Using an external crystal in conjunction with the internal oscillator *or*
2. Using an external 1.8-V LVCMOS-compatible clock input

Note: The external crystals used with the internal oscillators ***must*** operate in fundamental parallel resonant mode *only*. There is no overtone support.

The DEV Clock should in most cases be 20 MHz. However, it can optionally range anywhere from 20 - 30 MHz if the following are true:

- The DEV Clock is not used to source the SATA reference clock
- A precise 32768-Hz clock is not needed for Real-Time Clock functionality
- If the boot mode is FAST XIP

The AUX Clock is optional and can range from 20-30 MHz. AUX Clock can be used to source the Audio and/or Video PLLs when a very precise audio or video frequency is required.

7.4.1.1 Using the Internal Oscillators

When the internal oscillators are used to generate the DEV and AUX clocks, external crystals are required to be connected across the DEVOSC or AUXOSC oscillator MXI and MXO pins, along with two load capacitors (see Figure 7-7 and Figure 7-8). The external crystal load capacitors should also be connected to the associated oscillator ground pin (VSSA_DEVOSC or VSSA_AUXOSC). The capacitors should ***not*** be connected to board ground (VSS).

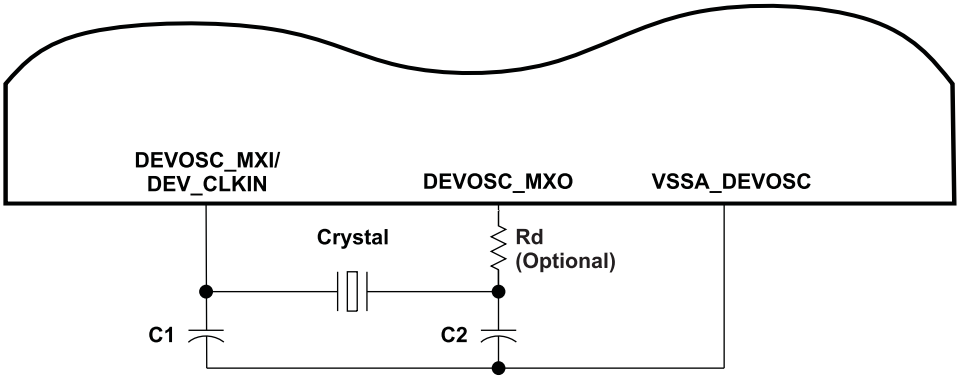

Figure 7-7. Device Oscillator

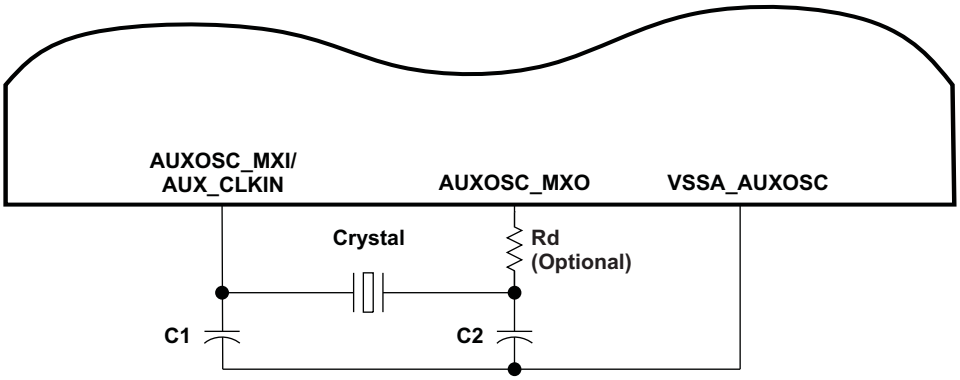

Figure 7-8. Auxiliary Oscillator

The load capacitors, C1 and C2 in the above pictures, should be chosen such that the below equation is satisfied. CL in the equation is the load specified by the crystal manufacturer. All discrete components used to implement the oscillator circuit should be placed as close as possible to the associated oscillator MXI, MXO, and VSS pins.

$$C_L = \frac{C_1 C_2}{(C_1 + C_2)}$$

Table 7-11. Input Requirements for Crystal Circuit on the Device Oscillator (DEVOSC)

PARAMETER			MIN	TYP	MAX	UNIT
	Start-up time (from power up until oscillating at stable frequency)				4	ms
	Crystal Oscillation frequency(1)		20	20	30	MHz
	Parallel Load Capacitance (C1 and C2)		12		24	pF
	Crystal ESR				50	Ω
	Crystal Shunt Capacitance				5	pF
	Crystal Oscillation Mode		Fundamental Only			n/a
	Crystal Frequency Stability	If Ethernet not used			±200	ppm
		If MII ***is*** used and RGMII, RMII not used			±100	
		If RGMII, or RMII used			±50	

(1) 20-MHz DEV clock is required for all bootmodes other than Fast XIP. For more detailed information on boot modes, see the *ROM Code Memory and Peripheral Booting* chapter of the *TMS320DM814x DaVinci Digital Media Processors Technical Reference Manual* (Literature Number: SPRUGZ8).

Table 7-12. Input Requirements for Crystal Circuit on the Auxiliary Oscillator (AUXOSC)

PARAMETER		MIN	MAX	UNIT
	Start-up time (from power up until oscillating at stable frequency)		4	ms
	Crystal Oscillation frequency	20	30	MHz
	Parallel Load Capacitance (C1 and C2)	12	24	pF
	Crystal ESR		50	Ω
	Crystal Shunt Capacitance		5	pF
	Crystal Oscillation Mode	Fundamental Only		n/a
	Crystal Frequency stability(1)		±50	ppm

(1) Applies only when sourcing the HDMI or HDVPSS DAC clocks from the AUXOSC

Copyright © 2011–2013, Texas Instruments Incorporated

7.4.1.2 Using a 1.8V LVCMOS-Compatible Clock Input

A 1.8-V LVCMOS-Compatible Clock Input can be used instead of the internal oscillators as the DEV and AUX clock inputs to the system. The external connections to support this are shown in Figure 7-9 and Figure 7-10. The DEV_CLKIN and AUX_CLKIN pins are connected to the 1.8-V LVCMOS-Compatible clock sources. The DEV_MXO and AUX_MXO pins are left unconnected. The VSSA_DEVOSC and VSSA_AUXOSC pins are connected to board ground (VSS).

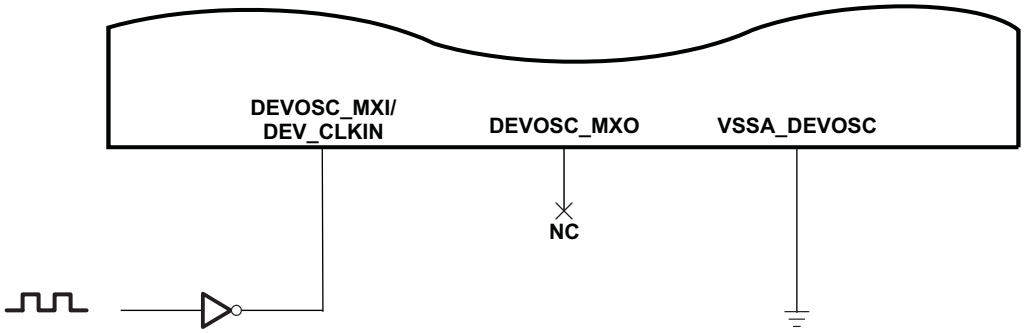

Figure 7-9. 1.8-V LVCMOS-Compatible Clock Input (DEV_OSC)

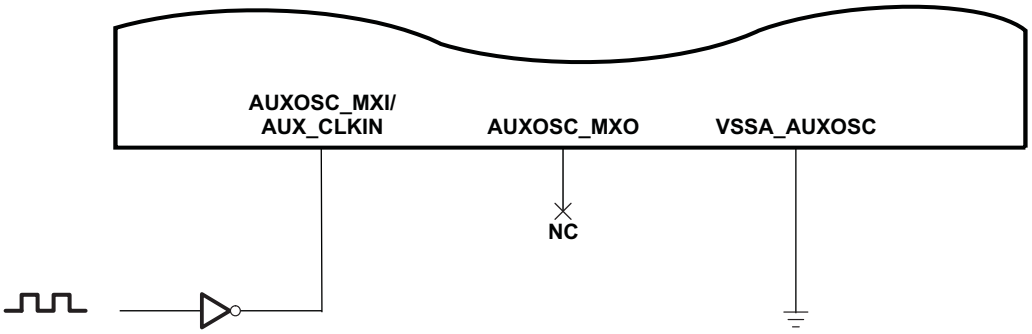

Figure 7-10. 1.8-V LVCMOS-Compatible Clock Input (AUX_OSC)

The clock source ***must*** meet the DEVOSC_MXI/DEV_CLKIN timing requirements shown in Table 7-15, *Timing Requirements for DEVOSC_MXI/DEV_CLKIN*.

The clock source must meet the AUXOSC_MXI/AUX_CLKIN timing requirements shown in Table 7-16, *Timing Requirements for AUXOSC_MXI/AUX_CLKIN*.

7.4.2 SERDES_CLKN/P Input Clock

A high-quality, low-jitter differential clock source is required for the PCIE PHY and is an optional clock source for the SATA PHY. The clock is required to be AC coupled to the SERDES_CLKP and SERDES_CLKN device pins according to the specifications in Table 7-13. Both the clock source and the coupling capacitors should be placed physically as close to the processor as possible. In addition, make sure to follow any PCB routing and termination recommendations that the clock source manufacturer recommends.

Table 7-13. SERDES_CLKN/P AC Coupling Capacitors Recommendations

PARAMETER		MIN	TYP	MAX	UNIT
	SERDES_CLKN/P AC coupling capacitor value	0.24	0.27	1.0	nF

Table 7-13. SERDES_CLKN/P AC Coupling Capacitors Recommendations (continued)

PARAMETER		MIN	TYP	MAX	UNIT
	SERDES_CLKN/P AC coupling capacitor package size(1)(2)		0402	0603	EIA

(1) L x W, 10 Mil units, that is, a 0402 is a 40 x 20 Mil surface mount capacitor.
(2) The physical size of the capacitor should be as small as practical. Use the same size on both lines in each pair placed side-by-side.

The differential clock source is required to meet the REFCLK AC Specifications outlined in the *PCI EXPRESS CARD ELECTROMECHANICAL SPECIFICATION, REV. 2.0*, at the input to the AC coupling capacitors.

In addition, LVDS clock sources that are compliant to the above specification, but with the following exceptions, are also acceptable:

Table 7-14. Acceptable Exceptions to the REFCLK AC Specifications for LVDS Clock Sources

PARAMETER		MIN	MAX	UNIT
V_{IH}	Differential High-Level Input Voltage	125	1000	mV
V_{IL}	Differential Low-Level Input Voltage	-1000	-125	mV

7.4.3 AUD_CLKINx Input Clocks

External clock inputs can optionally be provided at the AUD_CLKIN0/1/2 pins to serve as a reference clocks for the following modules:

- McASP3/4/5
- McBSP
- TIMER1/2/3/4/5/6/7/8

7.4.4 CLKIN32 Input Clock

An external 32768-Hz clock input can optionally be provided at the CLKIN32 pin to serve as a reference clock in place of the RTCDIVIDER clock for the following Modules:

- RTC
- GPIO0/1/2/3
- TIMER1/2/3/4/5/6/7/8
- ARM Cortex-A8
- SYNCTIMER

The CLKIN32 source must meet the timing requirements shown in Table 7-18.

7.4.5 External Input Clocks

There are three pins referred to as AUD_CLKIN0,1,2 which are used as optional sources for HDMI I2S, McASP, McBSP and TIMER1-8. The maximum IO pin frequency for these three input clocks is 50MHz.

7.4.6 Output Clocks Select Logic

The device includes two selectable general-purpose clock outputs (CLKOUT0 and CLKOUT1). The source for these output clocks is controlled by the CLKOUT_MUX register in the Control Module (see Figure 7-11).

Copyright © 2011–2013, Texas Instruments Incorporated

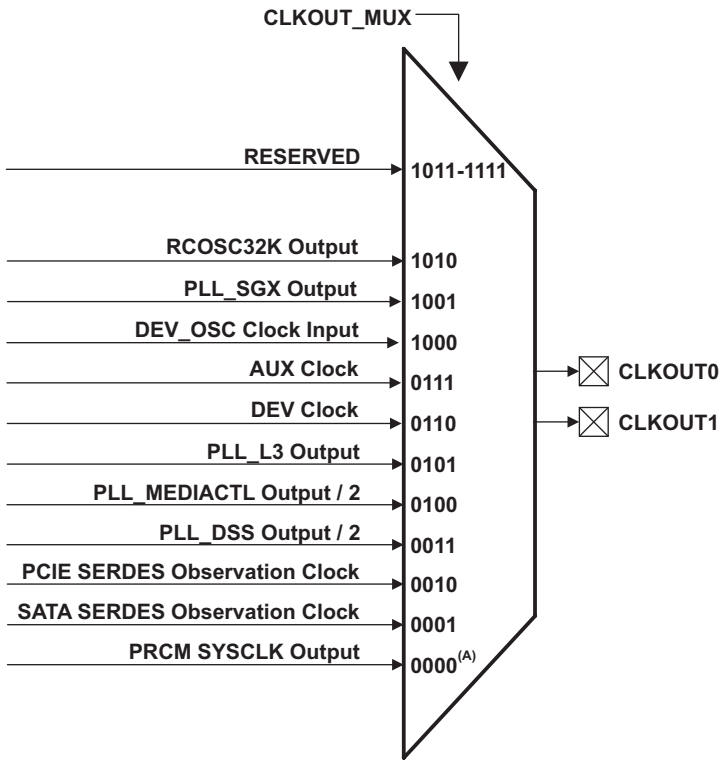

A. Muxed output of DEVOSC clock, USBPLL clock output, VIDEO0 PLL Clock output, and RTC DIVIDER output.

Figure 7-11. CLKOUTx Source Selection Logic

For detailed information on the CLKOUTx switching characteristics, see Table 7-19.

7.4.7 Input/Output Clocks Electrical Data/Timing

Note: If an external clock oscillator is used, a single clean power supply should be used to power both the device and the external clock oscillator circuit.

Table 7-15. Timing Requirements for DEVOSC_MXI/DEV_CLKIN(1) (2) (3)(see Figure 7-12)

NO.				OPP100			UNIT
				MIN	NOM	MAX	
1	$t_{c(DMXI)}$	Cycle time, DEVOSC_MXI/DEV_CLKIN		$33.\overline{33}$	50	50	ns
2	$t_{w(DMXIH)}$	Pulse duration, DEVOSC_MXI/DEV_CLKIN high		0.45C		0.55C	ns
3	$t_{w(DMXIL)}$	Pulse duration, DEVOSC_MXI/DEV_CLKIN low		0.45C		0.55C	ns
4	$t_{t(DMXI)}$	Transition time, DEVOSC_MXI/DEV_CLKIN				7	ns
5	$t_{J(DMXI)}$	Period jitter, DEVOSC_MXI/DEV_CLKIN				0.02C	ns
		Frequency Stability	If Ethernet not used			±200	ppm
			If MII is used and RGMII, RMII not used			±100	
			If RGMII, or RMII used			±50	

(1) The DEVOSC_MXI/DEV_CLKIN frequency and PLL settings should be chosen such that the resulting SYSCLKs and Module Clocks are within the specific ranges shown in the Section 7.4.9, *SYSCLKs* and Section 7.4.10, *Module Clocks*.
(2) The reference points for the rise and fall transitions are measured at V_{IL} MAX and V_{IH} MIN.
(3) C = DEV_CLKIN cycle time in ns. For example, when DEVOSC_MXI/DEV_CLKIN frequency is 20 MHz, use C = 50 ns.

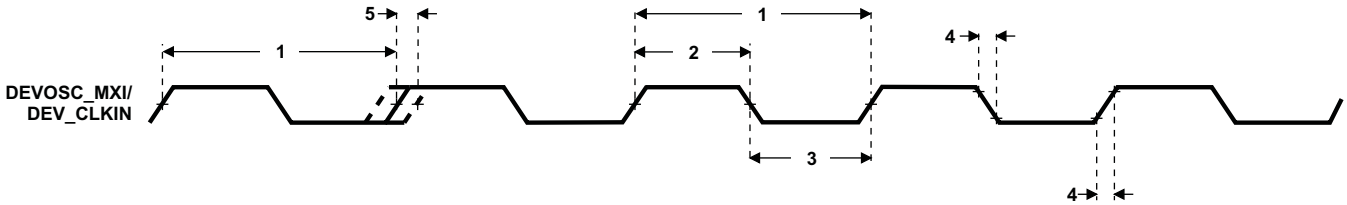

Figure 7-12. DEV_MXI/DEV_CLKIN Timing

Copyright © 2011–2013, Texas Instruments Incorporated

Table 7-16. Timing Requirements for AUX_MXI/AUX_CLKIN (1) (2) (see Figure 7-13)

NO.			OPP100			UNIT
			MIN	NOM	MAX	
1	$t_{c(AMXI)}$	Cycle time, AUXOSC_MXI/AUX_CLKIN	$33.\overline{3}$	50	50	ns
2	$t_{w(AMXIH)}$	Pulse duration, AUXOSC_MXI/AUX_CLKIN high	0.45C		0.55C	ns
3	$t_{w(AMXIL)}$	Pulse duration, AUXOSC_MXI/AUX_CLKIN low	0.45C		0.55C	ns
4	$t_{t(AMXI)}$	Transition time, AUXOSC_MXI/AUX_CLKIN			7	ns
5	$t_{J(AMXI)}$	Period jitter, AUXOSC_MXI/AUX_CLKIN			0.02C	ns
6	S_f	Frequency stability, AUXOSC_MXI/AUX_CLKIN (3)			± 50	ppm

(1) The reference points for the rise and fall transitions are measured at V_{IL} MAX and V_{IH} MIN.
(2) C = AUX_CLKIN cycle time in ns. For example, when AUXOSC_MXI/AUX_CLKIN frequency is 20 MHz, use C = 50 ns.
(3) Applies only when sourcing the HDMI or HDVPSS DAC clocks from the AUXOSC.

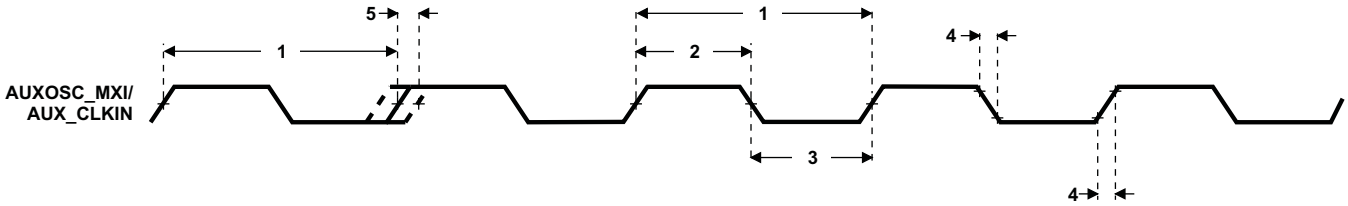

Figure 7-13. AUX_MXI/AUX_CLKIN Timing

Table 7-17. Timing Requirements for AUD_CLKINx (1) (see Figure 7-14)

NO.			OPP100/120/166			UNIT
			MIN	NOM	MAX	
1	$t_{c(AUD_CLKINx)}$	Cycle time, AUD_CLKINx	20			ns
2	$t_{w(AUD_CLKINxH)}$	Cycle time, AUD_CLKINx	0.45A		0.55 A	ns
3	$t_{w(AUD_CLKINxL)}$	Cycle time, AUD_CLKINx	0.45A		0.55 A	ns

(1) A = AUD_CLKINx cycle time in ns.

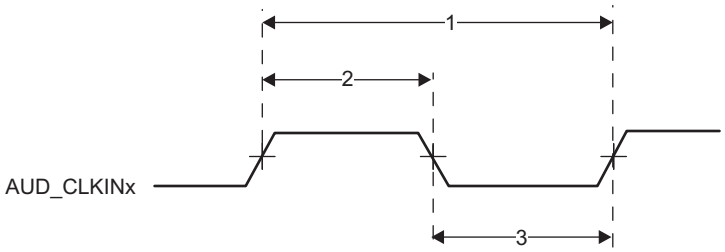

Figure 7-14. AUD_CLKINx Timing

Copyright © 2011–2013, Texas Instruments Incorporated

Table 7-18. Timing Requirements for CLKIN32 (1)(2) (see Figure 7-15)

NO.			OPP100			UNIT
			MIN	NOM	MAX	
1	$t_{c(CLKIN32)}$	Cycle time, CLKIN32	1/32768			s
2	$t_{w(CLKIN32H)}$	Pulse duration, CLKIN32 high	0.45C		0.55C	ns
3	$t_{w(CKIN32L)}$	Pulse duration, CLKIN32 low	0.45C		0.55C	ns
4	$t_{t(CLKIN32)}$	Transition time, CLKIN32			7	ns
5	$t_{J(CLKIN32)}$	Period jitter, CLKIN32			0.02C	ns

(1) The reference points for the rise and fall transitions are measured at V_{IL} MAX and V_{IH} MIN.
(2) C = CLKIN32 cycle time in ns. For example, when CLKIN32 frequency is 32768 Hz, use C = 1/32768 s.

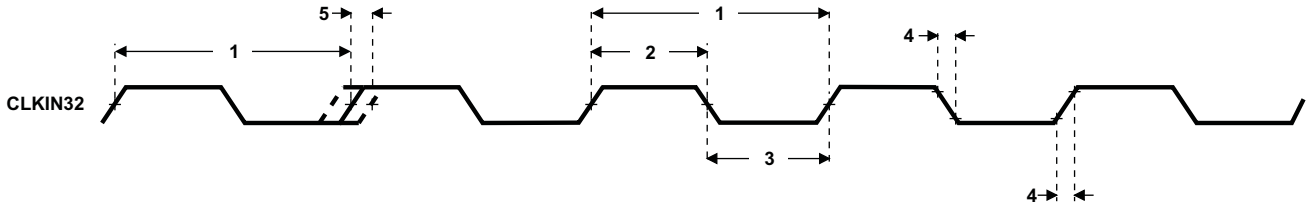

Figure 7-15. CLKIN32 Timing

Table 7-19. Switching Characteristics Over Recommended Operating Conditions for CLKOUTx (CLKOUT0 and CLKOUT1)(1) (2) (see Figure 7-16)

NO.	PARAMETER		OPP100		UNIT
			MIN	MAX	
1	$t_{c(CLKOUTx)}$	Cycle time, CLKOUTx	5		ns
2	$t_{w(CLKOUTxH)}$	Pulse duration, CLKOUTx high	0.45P	0.55P	ns
3	$t_{w(CLKOUTxL)}$	Pulse duration, CLKOUTx low	0.45P	0.55P	ns
4	$t_{t(CLKOUTx)}$	Transition time, CLKOUTx		0.05P	ns

(1) The reference points for the rise and fall transitions are measured at V_{OL} MAX and V_{OH} MIN.
(2) P = 1/CLKOUTx clock frequency in nanoseconds (ns). For example, when CLKOUTx frequency is 200 MHz, use P = 5 ns.

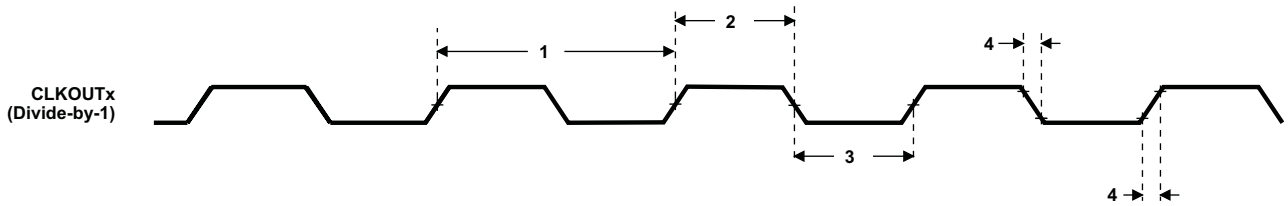

Figure 7-16. CLKOUTx Timing

7.4.8 PLLs

The device contains 12 top-level PLLs, and 4 embedded PLLs (within the ARM Cortex-A8, PCIE, SATA, and CSI) that provide clocks to different parts of the system. Figure 7-17 and Figure 7-18 show simplified block diagrams of the Top-Level PLL and PLL_ARM. In addition, see the System Clocking Overview (Figure 7-6) for a high-level view of the device clock architecture including the PLL reference clock sources and connections.

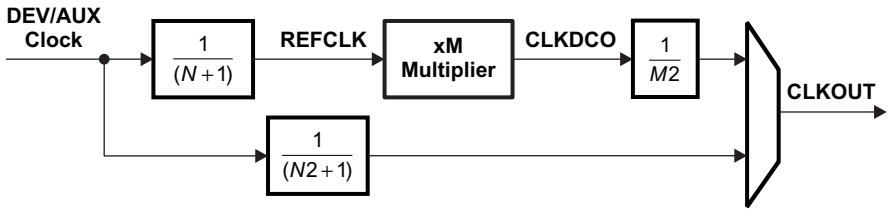

Figure 7-17. Top-Level PLL Simplified Block Diagram

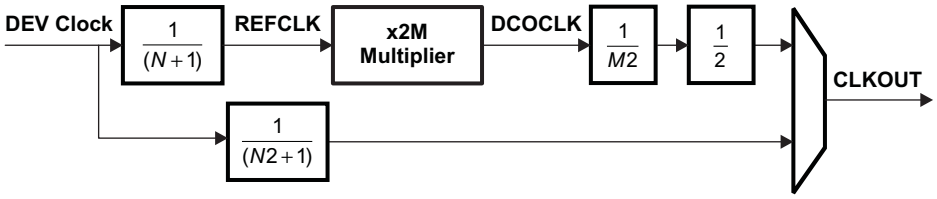

Figure 7-18. PLL_ARM Simplified Block Diagram

The reference clock for most of the PLLs comes from the DEV input clock, with select PLLs also having the option to use the AUX input clock as a reference. Also, each PLL supports a Bypass mode in which the reference clock can be directly passed to the PLL CLKOUT through a divider. All device PLL's will come-up in Bypass mode after reset.

For details on programming the device PLLs, see the *Control Module* chapter of the *TMS320DM814x DaVinci Digital Media Processors Technical Reference Manual* (Literature Number: SPRUGZ8).

 Copyright © 2011–2013, Texas Instruments Incorporated

7.4.8.1 PLL Power Supply Filtering

The device PLLs are supplied externally via the VDDA_**x**PLL_1P8 power-supply pins (where "**x**" represents ARM, DSP, VID0, VID1, AUDIO, DDR, and/or L3). External filtering must be added on the PLL supply pins to ensure that the requirements in Table 7-20 are met.

Table 7-20. PLL Power Supply Requirements

PARAMETER	MIN	MAX	UNIT
Dynamic noise at VDDA_**x**PLL_1P8 pins		50	mV p-p

7.4.8.2 PLL Multipliers and Dividers

The Top-Level and PLL_ARM PLLs support the internal multiplier and divider values shown in Table 7-21, *Top-Level PLL Multiplier and Divider Limits* and Table 7-22, *PLL_ARM Multiplier and Divider Limits*. The PLLs must be programmed to conform to the various REFCLK, CLKDCO, DCOCLK, and CLKOUT limits described in Section 7.4.8.3, *PLL Frequency Limits*.

Table 7-21. Top-Level PLL Multiplier and Divider Limits

PARAMETER	MIN	MAX
N Pre-Divider	0	255
PLL Multiplier (M)	2	4095 (1)
M2 Post Divider	1	127
N2 Bypass Divider	0	15

(1) The PLL Multiplier supports fractional values (up to 18-bits of fraction) except when the PLL Multiplier is > 4093.

Table 7-22. PLL_ARM Multiplier and Divider Limits

PARAMETER	MIN	MAX
N Pre-Divider	0	127
PLL Multiplier (M) (1)	2	2047 (2)
M2 Post Divider	1	31
N2 Bypass Divider	0	15

(1) This parameter describes the limits on the programmable multiplier value M. The multiplication factor for the PLL_ARM is equal to 2 * M (also see Figure 7-18).
(2) The PLL Multiplier supports fractional values (up to 18-bits of fraction) except when the PLL Multiplier is < 20 OR > 2045.

7.4.8.3 PLL Frequency Limits

Each PLL supports a minimum and maximum operating frequency for its REFCLK, CKLDCO, and CLKOUT values. The PLLs must be configured not to exceed any of the constraints placed on these values shown in Table 7-23 through Table 7-25. Care must be taken to stay within these limits when selecting external clock input frequencies, internal divider values, and PLL multiply ratios. In addition, limits shown in these tables may be further restricted by the clock frequency limitations of the device modules using these clocks. For more detailed information on the SYSCLK and Module Clock frequency limits, see Section 7.4.9, *SYSCLKs* and Section 7.4.10, *Module Clocks*.

Table 7-23. Top-Level PLL Frequency Ranges (ALL OPPs)

CLOCK	MIN	MAX	UNIT
REFCLK	0.5	2.5	MHz
CLKDCO (HS1) (1)	1000	2000	MHz
CLKDCO (HS2) (2)	500	1000	MHz

(1) The PLL has two modes of operation: HS1 and HS2. The mode of operation should be set, according to the desired CLKDCO frequency, by programming the SELFREQDCO field of the ADPLLLJx_CLKCTRL registers in the Control Module.
(2) CLKDCO of the PLL_USB is used undivided by the USB modules; therefore, CLKDCO for the PLL_USB PLL must be programmed to 960 MHz for proper operation.

Copyright © 2011–2013, Texas Instruments Incorporated

Table 7-23. Top-Level PLL Frequency Ranges (ALL OPPs) (continued)

CLOCK	MIN	MAX	UNIT
CLKOUT	see Table 7-25	see Table 7-25	MHz

Table 7-24. ARM Cortex-A8 Embedded PLL (PLL_ARM) Frequency Ranges (ALL OPPs)

CLOCK	MIN	MAX	UNIT
REFCLK	0.032	52	MHz
DCOCLK	20	2000	MHz
CLKOUT	see Table 7-25	see Table 7-25	MHz

Table 7-25. PLL CLKOUT Frequency Ranges

PLL	OPP100		UNIT
	MIN	MAX	
PLL_ARM	10	600	MHz
PLL_DSP	10	500	MHz
PLL_SGX	10	200	MHz
PLL_HDVICP	10	266	MHz
PLL_L3	10	200	MHz
PLL_DDR	10	400	MHz
PLL_HDVPSS	10	200	MHz
PLL_AUDIO	10	200	MHz
PLL_MEDIACTL	10	400	MHz
PLL_USB	10 (1)	960	MHz
PLL_VIDEO0	10	200	MHz
PLL_VIDEO1	10	200	MHz
PLL_VIDEO2	10	200	MHz

(1) When the USB is used, PLL_USB **must** be fixed at 960 MHz.

7.4.8.4 PLL Register Descriptions

The PLL Control Registers reside in the Control Module and are listed in Section 4.1, *Control Module* of this datasheet.

Copyright © 2011–2013, Texas Instruments Incorporated

7.4.9 SYSCLKs

In some cases, the system clock inputs and PLL outputs are sent to the PRCM Module for division and multiplexing before being routed to the various device Modules. These clock outputs from the PRCM Module are called SYSCLKs. Table Table 7-26 lists the device SYSCLKs along with their maximum supported clock frequencies. In addition, limits shown in these tables may be further restricted by the clock frequency limitations of the device modules using these clocks. For more details on Module Clock frequency limits, see Section 7.4.10 *Module Clocks*.

Table 7-26. Maximum SYSCLK Clock Frequencies(1)

SYSCLK	MAX CLOCK FREQUENCY OPP100 (MHz)
SYSCLK1	RSV
SYSCLK2	RSV
SYSCLK3	266
SYSCLK4	200
SYSCLK5	RSV
SYSCLK6	100
SYSCLK7	RSV
SYSCLK8	192
SYSCLK9	RSV
SYSCLK10	48
SYSCLK11	RSV
SYSCLK12	RSV
SYSCLK13	RSV
SYSCLK14	27
SYSCLK15	RSV
SYSCLK16	27
SYSCLK17	RSV
SYSCLK18	0.032768
SYSCLK19	192
SYSCLK20	192
SYSCLK21	192
SYSCLK22	RSV
SYSCLK23	200

(1) The maximum frequencies listed in this table are valid for OPP100. Some of these frequencies have higher maximum values when OPP120 or OPP166 is used, see Table 7-4

7.4.10 Module Clocks

Device Modules either receive their clock directly from an external clock input, directly from a PLL, or from a PRCM SYSCLK output. Table 7-27 lists the clock source options for each Module on this device, along with the maximum frequency that Module can accept. To ensure proper Module functionality, the device PLLs and dividers **must** be programmed not to exceed the maximum frequencies listed in this table.

Table 7-27. Maximum Module Clock Frequencies(1)

MODULE	CLOCK SOURCES	MAX FREQUENCY OPP100 (MHz)
Cortex-A8	PLL_ARM SYSCLK18	600
DCAN0/1	DEV Clock	30
DDR0/1	PLL_DDR	400
DMM	PLL_DDR/2	200
DSP	PLL_DSP	500
System MMU	SYSCLK4	200
EDMA	SYSCLK4	200
EMAC Switch (GMII)	SATA SERDES	Fixed 125
EMAC Switch (RGMII)	PLL_VIDEO0 PLL_VIDEO1 PLL_VIDEO02 PLL_L3	Fixed 250
EMAC Switch (RMII and MII)	SATA SERDES EMAC_RMREFCLK Pin	Fixed 50
GPIO	SYSCLK6	100
GPIO Debounce	SYSCLK18	Fixed 0.032768
GPMC	SYSCLK6	100
HDMI	PLL_VIDEO2	186
HDMI CEC	SYSCLK10	Fixed 48
HDMI I2S	SYSCLK20 SYSCLK21 AUD_CLK0/1/2 AUX Clock	50
HDVICP2	SYSCLK3	266
HDVPSS	PLL_HDVPSS	200
HDVPSS VOUT1	PLL_VIDEO2 HDMI PHY	186
HDVPSS VOUT0	PLL_VIDEO1 PLL_VIDEO2	165
HDVPSS SD VENC	PLL_VIDEO0	Fixed 54
I2C0/1/2/3	SYSCLK10	48
ISS	PLL_ MEDIACTL	400
L3 Fast	SYSCLK4	200
L3 Medium	SYSCLK4	200
L3 Slow	SYSCLK6	100
L4 Fast	SYSCLK4	200
L4 Slow	SYSCLK6	100
Mailbox	SYSCLK6	100
McASP	SYSCLK6	100
McASP0/1/2 AUX_CLK	SYSCLK20 SYSCLK21	192

(1) The maximum frequencies listed in this table are valid for OPP100. Some of these frequencies have higher maximum values when OPP120 or OPP166 is used, see Table 7-4

Copyright © 2011–2013, Texas Instruments Incorporated

Table 7-27. Maximum Module Clock Frequencies[(1)] (continued)

MODULE	CLOCK SOURCES	MAX FREQUENCY OPP100 (MHz)
McASP3/4/5 AUX_CLK	PLL_AUDIO PLL_VIDEO0/1/2 AUD_CLK0/1/2 AUX Clock	192
McBSP CLKS	SYSCLK20 SYSCLK21 AUD_CLK0/1/2 AUX Clock	192
Media Controller	PLL_MEDIACTL/2	200
MMCSD0/1/2	SYSCLK8	192
OCMC RAM	SYSCLK4	200
PCIe SERDES	SERDES_CLKx Pins	100
SATA SERDES	DEV Clock SERDES_CLKx Pins	20 or 100
SGX530	SYSCLK23	200
SPI0/1/2/3	SYSCLK10	48
Spinlock	SYSCLK6	100
Sync Timer	SYSCLK18	Fixed 0.032768
TIMER1/2/3/4/5/6/7/8	SYSCLK18 DEV Clock AUX Clock AUD_CLK0/1/2 TCLKIN	30
UART0/1/2	SYSCLK10	48
UART3/4/5	SYSCLK6 SYSCLK8 SYSCLK10	192
USB	PLL_USB CLKDCO	Fixed 960
WDT0	RTCDIVIDER RCOSC32K	Fixed 0.032768

Copyright © 2011–2013, Texas Instruments Incorporated

7.5 Interrupts

The device has a large number of interrupts to service the needs of its many peripherals and subsystems. The ARM Cortex-A8, C674x DSP, and Media Controller are capable of servicing these interrupts. However, the C674x DSP require additional system-level interrupt multiplexors to receive their interrupts. The following sections list the device interrupt mapping and multiplexing schemes.

7.5.1 ARM Cortex-A8 Interrupts

The ARM Cortex-A8 Interrupt Controller (AINTC) is responsible for prioritizing all service requests from the System peripherals and generating either IRQs or FIQs to the Cortex-A8. The AINTC has the capability to handle up to 128 requests, and the priority of the interrupt inputs are programmable. Table 7-28 lists the interrupt sources for the AINTC.

Note: For General-Purpose devices, the AINTC does not support the generation of FIQs to the ARM processor.

For more details on ARM Cortex-A8 interrupt control, see the ARM Interrupt Controller (AINTC) chapter of the *TMS320DM814x DaVinci Digital Media Processors Technical Reference Manual* (Literature Number: SPRUGZ8).

Table 7-28. ARM Cortex-A8 Interrupt Controller (AINTC) Interrupt Sources

Cortex-A8 INTERRUPT NUMBER	ACRONYM	SOURCE
0	EMUINT	Cortex-A8 Emulation
1	COMMTX	Cortex-A8 Emulation
2	COMMRX	Cortex-A8 Emulation
3	BENCH	Cortex-A8 Emulation
4	ELM_IRQ	ELM
5	–	Reserved
6	–	Reserved
7	NMI	NMIn Pin
8	–	Reserved
9	L3DEBUG	L3 Interconnect
10	L3APPINT	L3 Interconnect
11	TINT8	TIMER8
12	EDMACOMPINT	EDMA CC Completion
13	EDMAMPERR	EDMA Memory Protection Error
14	EDMAERRINT	EDMA CC Error
15	WDTINT0	Watchdog Timer 0
16	SATAINT	SATA
17	USBSSINT	USB Subsystem
18	USBINT0	USB0
19	USBINT1	USB1
20-27	–	Reserved
28	SDINT1	MMC/SD1
29	SDINT2	MMC/SD2
30	I2CINT2	I2C2
31	I2CINT3	I2C3
32	GPIOINT2A	GPIO2 A
33	GPIOINT2B	GPIO2 B
34	USBWAKEUP	USB Subsystem Wakeup
35	PCIeWAKEUP	PCIe Wakeup

Copyright © 2011–2013, Texas Instruments Incorporated

Table 7-28. ARM Cortex-A8 Interrupt Controller (AINTC) Interrupt Sources (continued)

Cortex-A8 INTERRUPT NUMBER	ACRONYM	SOURCE
36	DSSINT	HDVPSS
37	GFXINT	SGX530
38	HDMIINT	HDMI
39	ISS_IRQ_5	ISS
40	3PGSWRXTHR0	EMAC Switch RX Threshold
41	3PGSWRXINT0	EMAC Switch Receive
42	3PGSWTXINT0	EMAC Switch Transmit
43	3PGSWMISC0	EMAC Switch Miscellaneous
44	UARTINT3	UART3
45	UARTINT4	UART4
46	UARTINT5	UART5
47	-	Reserved
48	PCIINT0	PCIe
49	PCIINT1	PCIe
50	PCIINT2	PCIe
51	PCIINT3	PCIe
52	DCAN0_INT0	DCAN0
53	DCAN0_INT1	DCAN0
54	DCAN0_PARITY	DCAN0 Parity
55	DCAN1_INT0	DCAN1
56	DCAN1_INT1	DCAN1
57	DCAN1_PARITY	DCAN1 Parity
58-61	–	Reserved
62	GPIOINT3A	GPIO3
63	GPIOINT3B	GPIO3
64	SDINT0	MMC/SD0
65	SPIINT0	SPI0
66	-	Reserved
67	TINT1	TIMER1
68	TINT2	TIMER2
69	TINT3	TIMER3
70	I2CINT0	I2C0
71	I2CINT1	I2C1
72	UARTINT0	UART0
73	UARTINT1	UART1
74	UARTINT2	UART2
75	RTCINT	RTC
76	RTCALARMINT	RTC Alarm
77	MBINT	Mailbox
78	–	Reserved
79	PLLINT	PLL Recalculation Interrupt
80	MCATXINT0	McASP0 Transmit
81	MCARXINT0	McASP0 Receive
82	MCATXINT1	McASP1 Transmit
83	MCARXINT1	McASP1 Receive
84	MCATXINT2	McASP2 Transmit
85	MCARXINT2	McASP2 Receive

Copyright © 2011–2013, Texas Instruments Incorporated

Table 7-28. ARM Cortex-A8 Interrupt Controller (AINTC) Interrupt Sources (continued)

Cortex-A8 INTERRUPT NUMBER	ACRONYM	SOURCE
86	MCBSPINT	McBSP
87	–	Reserved
88	–	Reserved
91	–	Reserved
92	TINT4	TIMER4
93	TINT5	TIMER5
94	TINT6	TIMER6
95	TINT7	TIMER7
96	GPIOINT0A	GPIO0
97	GPIOINT0B	GPIO0
98	GPIOINT1A	GPIO1
99	GPIOINT1B	GPIO1
100	GPMCINT	GPMC
101	DDRERR0	DDR0
102	DDRERR1	DDR1
103	HDVICPCONT1SYNC	HDVICP2
104	HDVICPCONT2SYNC	HDVICP2
105	MCATXINT3	McASP3 Transmit
106	MCARXINT3	McASP3 Receive
107	IVA0MBOXINT	HDVICP2 Mailbox
108	MCATXINT4	McASP4 Transmit
109	MCARXINT4	McASP4 Receive
110	MCATXINT5	McASP5 Transmit
111	MCARXINT5	McASP5 Receive
112	TCERRINT0	EDMA TC 0 Error
113	TCERRINT1	EDMA TC 1 Error
114	TCERRINT2	EDMA TC 2 Error
115	TCERRINT3	EDMA TC 3 Error
116-119	–	Reserved
122	MMUINT	System MMU
123	MCMMUINT	Media Controller
124	DMMINT	DMM
125	SPIINT1	SPI1
126	SPIINT2	SPI2
127	SPIINT3	SPI3

Copyright © 2011–2013, Texas Instruments Incorporated

7.5.2 C674x DSP Interrupts

The C674x DSP interrupt controller combines up to 128 device events into 12 prioritized interrupts presented to the CPU. The default sources of the 128 device events are shown in Table 7-29. In addition, device events 15 through 95 can alternatively be sourced from one of the 24 Multiplexed device events shown in Table 7-30. The DSP_INTMUX_x registers in the Control Module are used to select between the default event and the multiplexed event. The interrupt controller also controls the generation of the CPU exceptions, NMI, and emulation interrupts.

Table 7-29. Default C674x Event Sources

C674x DEFAULT EVENT NUMBER	ACRONYM	SOURCE
0	EVT0	C674x Interrupt Controller 0
1	EVT1	C674x Interrupt Controller 1
2	EVT2	C674x Interrupt Controller 2
3	EVT3	C674x Interrupt Controller 3
4	-	Reserved
5	-	Reserved
6	-	Reserved
7	-	Reserved
8	-	Reserved
9	EMU_DTDMA	C674x-ECM
10	-	Reserved
11	EMU_RTDXRX	C674x-RTDX
12	EMU_RTDXTX	C674x-RTDX
13	IDMAINT0	C674x-ECM
14	C674x	C674x-ECM
15	SDINT0	MMC/SD0
16	SPIINT0	SPI0
17	–	Reserved
18	ELM_IRQ	ELM
19	–	Reserved
20	EDMAINT	EDMA CC
21	EDMAERRINT	EDMA CC Error
22	TCERRINT0	EDMA TC0 Error
23	ISS_IRQ4	ISS
24	–	Reserved
25	–	Reserved
26	–	Reserved
27	TCERRINT1	EDMA TC1 Error
28	TCERRINT2	EDMA TC2 Error
29	TCERRINT3	EDMA TC3 Error
30	SDINT1	MMC/SD1
31	SDINT2	MMC/SD2
32	3PGSWRXTHR0	EMAC Switch RX Threshold
33	3PGSWRXINT0	EMAC Switch RX
34	3PGSWTXINT0	EMAC Switch TX
35	3PGSWMISC0	EMAC Switch Miscellaneous
36	PCIINT0	PCIe
37	PCIINT1	PCIe
38	PCIINT2	PCIe

Table 7-29. Default C674x Event Sources (continued)

C674x DEFAULT EVENT NUMBER	ACRONYM	SOURCE
39	PCIINT3	PCIe
40	DSSINT	DSS
41	HDMIINT	HDMI
42	SATAINT	SATA
43	GFXINT	SGX530
46	-	Reserved
47-48	-	Reserved
49	TINT1	TIMER1
50	TINT2	TIMER2
51	TINT3	TIMER3
52	TINT4	TIMER4
53	TINT5	TIMER5
54	TINT6	TIMER6
55	TINT7	TIMER7
56	MBINT	Mailbox
57	GPIOINT3A	GPIO3
58	I2CINT0	I2C0
59	I2CINT1	I2C1
60	UARTINT0	UART0
61	UARTINT1	UART1
62	UARTINT2	UART2
63	GPIOINT3B	GPIO3
64	GPIOINT0A	GPIO0
65	GPIOINT0B	GPIO0
66	GPIOINT1A	GPIO1
67	GPIOINT1B	GPIO1
68	GPIOINT2A	GPIO2
69	GPIOINT2B	GPIO2
70	MCATXINT0	McASP0 Transmit
71	MCARXINT0	McASP0 Receive
72	MCATXINT1	McASP1 Transmit
73	MCARXINT1	McASP1 Receive
74	MCATXINT2	McASP2 Transmit
75	MCARXINT2	McASP2 Receive
76	MCBSPINT	McBSP
77	UARTINT3	UART3
78	UARTINT4	UART4
79	UARTINT5	UART5
80	MCATXINT3	McASP3 Transmit
81	MCARXINT3	McASP3 Receive
82	MCATXINT4	McASP4 Transmit
83	MCARXINT4	McASP4 Receive
84	MCATXINT5	McASP5 Transmit
85	MCARXINT5	McASP5 Receive
86	SPIINT1	SPI1
87	SPIINT2	SPI2
88	SPIINT3	SPI3

Copyright © 2011–2013, Texas Instruments Incorporated

Table 7-29. Default C674x Event Sources (continued)

C674x DEFAULT EVENT NUMBER	ACRONYM	SOURCE
89	I2CINT2	I2C2
90	HDVICPCONT1SYNC	HDVICP2
91	HDVICPCONT2SYNC	HDVICP2
92	I2CINT3	I2C3
93	MMUINT	System MMU
94	HDVICPMBOXINT	HDVICP2 Mailbox
95	GPMCINT	GPMC
96	INTERR	C674x-Int Ctl
97	EMC_IDMAERR	C674x-EMC
98	-	Reserved
99	-	Reserved
100	EFIINTA	C674x-EFIA
101	EFIINTB	C674x-EFIB
102	-	Reserved
103	-	Reserved
104	-	Reserved
105	-	Reserved
106	-	Reserved
107	-	Reserved
108	-	Reserved
109	-	Reserved
110	-	Reserved
111	-	Reserved
112	-	Reserved
113	PMC_ED	C674x-PMC
114	-	Reserved
115	-	Reserved
116	UMC_ED1	C674x-UMC
117	UMC_ED2	C674x-UMC
118	PDC_INT	C674x-PDC
119	SYS_CMPA	C674x-SYS
120	PMC_CMPA	C674x-PMC
121	PMC_DMPA	C674x-PMC
122	DMC_CMPA	C674x-DMC
123	DMC_DMPA	C674x-DMC
124	UMC_CMPA	C674x-UMC
125	UMC_DMPA	C674x-UMC
126	EMC_CMPA	C674x-EMC
127	EMC_BUSERR	C674x-EMC

Table 7-30. Multiplexed C674x Event Sources

C674x MULTIPLEXED EVENT NUMBER	ACRONYM	SOURCE
0	-	Default Event
1	DCAN0_INT0	DCAN0
2	DCAN0_INT1	DCAN0
3	DCAN1_PARITY	DCAN0 Parity
4	DCAN1_INT0	DCAN1
5	DCAN1_INT1	DCAN1
6	DCAN1_PARITY	DCAN1 Parity
7	–	Reserved
8	–	Reserved
9	–	Reserved
10	-	Reserved
11	L3DEBUG	L3 Interconnect
12	L3APPINT	L3 Interconnect
13	EDMAMPERR	EDMA Memory Protection Error
14	TINT8	TIMER8
15	WDTINT0	Watchdog Timer 0
16	USBSSINT	USB Subsystem
17	USBINT0	USB0
18	USBINT1	USB1
19	RTCINT	RTC
20	RTCALARMINT	RTC Alarm
21	-	Reserved
22	-	Reserved
23	DDRERR0	DDR0
24	DDRERR1	DDR1

Copyright © 2011–2013, Texas Instruments Incorporated

8 Peripheral Information and Timings

8.1 Parameter Information

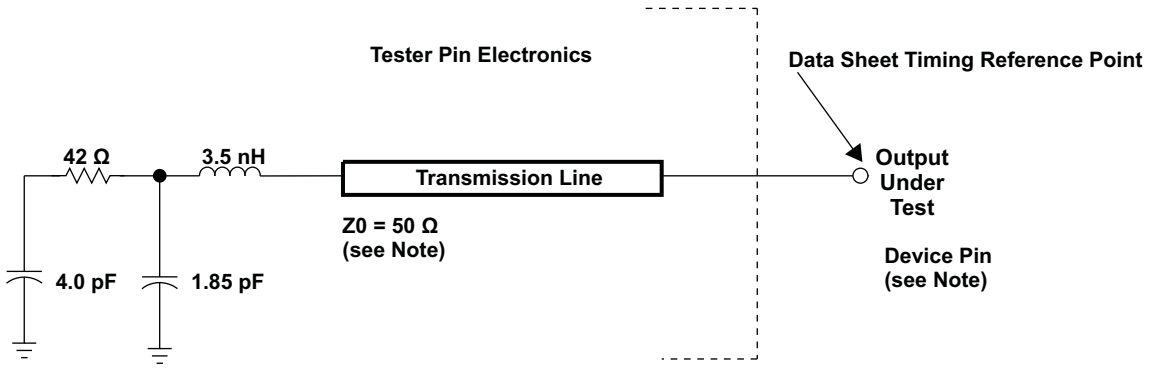

NOTE: The data sheet provides timing at the device pin. For output timing analysis, the tester pin electronics and its transmission line effects must be taken into account. A transmission line with a delay of 2 ns can be used to produce the desired transmission line effect. The transmission line is intended as a load only. It is not necessary to add or subtract the transmission line delay (2 ns) from the data sheet timings.

Input requirements in this data sheet are tested with an input slew rate of < 4 Volts per nanosecond (4 V/ns) at the device pin.

Figure 8-1. Test Load Circuit for AC Timing Measurements

The load capacitance value stated is only for characterization and measurement of AC timing signals. This load capacitance value does not indicate the maximum load the device is capable of driving.

8.1.1 1.8-V and 3.3-V Signal Transition Levels

All input and output timing parameters are referenced to V_{ref} for both "0" and "1" logic levels. For 3.3-V I/O, V_{ref} = 1.5 V. For 1.8-V I/O, V_{ref} = 0.9 V.

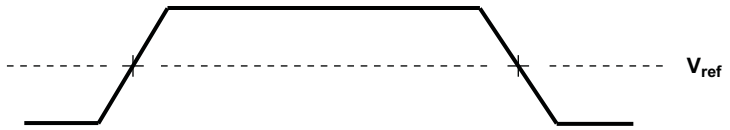

Figure 8-2. Input and Output Voltage Reference Levels for AC Timing Measurements

All rise and fall transition timing parameters are referenced to V_{IL} MAX and V_{IH} MIN for input clocks, V_{OL} MAX and V_{OH} MIN for output clocks.

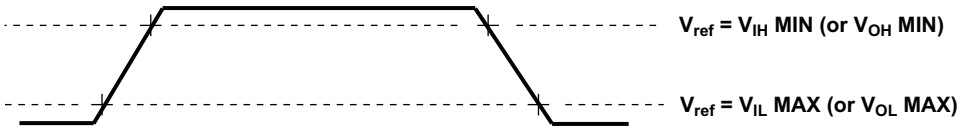

Figure 8-3. Rise and Fall Transition Time Voltage Reference Levels

8.1.2 3.3-V Signal Transition Rates

All timings are tested with an input edge rate of 4 volts per nanosecond (4 V/ns).

8.1.3 Timing Parameters and Board Routing Analysis

The timing parameter values specified in this data manual do *not* include delays by board routings. As a good board design practice, such delays must *always* be taken into account. Timing values may be adjusted by increasing/decreasing such delays. TI recommends utilizing the available I/O buffer information specification (IBIS) models to analyze the timing characteristics correctly. To properly use IBIS models to attain accurate timing analysis for a given system, see the *Using IBIS Models for Timing Analysis* application report (Literature Number: SPRA839). If needed, external logic hardware such as buffers may be used to compensate any timing differences.

8.2 Recommended Clock and Control Signal Transition Behavior

All clocks and control signals ***must*** transition between V_{IH} and V_{IL} (or between V_{IL} and V_{IH}) in a monotonic manner.

Copyright © 2011–2013, Texas Instruments Incorporated

8.3 Controller Area Network Interface (DCAN)

The device provides two DCAN interfaces for supporting distributed realtime control with a high level of security. The DCAN interfaces implement the following features:

- Supports CAN protocol version 2.0 part A, B
- Bit rates up to 1 MBit/s
- 64 message objects
- Individual identifier mask for each message object
- Programmable FIFO mode for message objects
- Programmable loop-back modes for self-test operation
- Suspend mode for debug support
- Software module reset
- Automatic bus on after Bus-Off state by a programmable 32-bit timer
- Message RAM parity check mechanism
- Direct access to Message RAM during test mode
- CAN Rx/Tx pins are configurable as general-purpose IO pins
- Two interrupt lines (plus additional parity-error interrupts line)
- RAM initialization
- DMA support

For more detailed information on the DCAN peripheral, see the *DCAN Controller Area Network* chapter of the *TMS320DM814x DaVinci Digital Media Processors Technical Reference Manual* (Literature Number: SPRUGZ8).

8.3.1 DCAN Peripheral Register Descriptions

8.3.2 DCAN Electrical Data/Timing

Table 8-1. Timing Requirements for DCANx Receive[(1)] (see Figure 8-4)

NO.			OPP100/120/166			UNIT
			MIN	NOM	MAX	
	f(baud)	Maximum programmable baud rate			1	Mbps
1	$t_{w(DCANRX)}$	Pulse duration, receive data bit (DCANx_RX)	H - 2		H + 2	ns

(1) H = period of baud rate, 1/programmed baud rate.

Table 8-2. Switching Characteristics Over Recommended Operating Conditions for DCANx Transmit [(1)](see Figure 8-4)

NO.	PARAMETER		OPP100/120/166		UNIT
			MIN	MAX	
	f(baud)	Maximum programmable baud rate		1	Mbps
2	$t_{w(DCANTX)}$	Pulse duration, transmit data bit (DCANx_TX)	H - 2	H + 2	ns

(1) H = period of baud rate, 1/programmed baud rate.

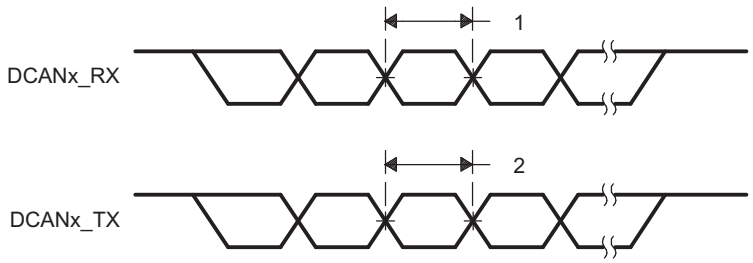

Figure 8-4. DCANx Timings

Copyright © 2011–2013, Texas Instruments Incorporated

8.4 EDMA

The EDMA controller handles all data transfers between memories and the device slave peripherals on the device. These data transfers include cache servicing, non-cacheable memory accesses, user-programmed data transfers, and host accesses.

8.4.1 EDMA Channel Synchronization Events

The EDMA Channel controller supports up to 64 channels that service peripherals and memory. Each EDMA channel is mapped to a defaul EDMA synchronization event as shown in Table 8-3. By default, each event uses the parameter entry that matches its event number. However, because the device includes a channel mapping feature, each event may be mapped to any of 512 parameter table entries. For more detailed information, see the *Enhanced Direct Memory Access Controller* chapter of the *TMS320DM814x DaVinci Digital Media Processors Technical Reference Manual* (Literature Number: SPRUGZ8).

Table 8-3. EDMA Default Synchronization Events

EVENT NUMBER	DEFAULT EVENT NAME	DEFAULT EVENT DESCRIPTION
0-1	–	Reserved
2	SDTXEVT1	SD1 Transmit
3	SDRXEVT1	SD1 Receive
4-7	–	Reserved
8	AXEVT0	McASP0 Transmit
9	AREVT0	McASP0 Receive
10	AXEVT1	McASP1 Transmit
11	AREVT1	McASP1 Receive
12	AXEVT2	McASP2 Transmit
13	AREVT2	McASP2 Receive
14	BXEVT	McBSP Transmit
15	BREVT	McBSP Receive
16	SPI0XEVT0	SPI0 Transmit 0
17	SPI0REVT0	SPI0 Receive 0
18	SPI0XEVT1	SPI0 Transmit 1
19	SPI0REVT1	SPI0 Receive 1
20	SPI0XEVT2	SPI0 Transmit 2
21	SPI0REVT2	SPI0 Receive 2
22	SPI0XEVT3	SPI0 Transmit 3
23	SPI0REVT3	SPI0 Receive 3
24	SDTXEVT0	SD0 Transmit
25	SDRXEVT0	SD0 Receive
26	UTXEVT0	UART0 Transmit
27	URXEVT0	UART0 Receive
28	UTXEVT1	UART1 Transmit
29	URXEVT1	UART1 Receive
30	UTXEVT2	UART2 Transmit
31	URXEVT2	UART2 Receive
32-35	–	Reserved
36	ISS_DMA_REQ1	ISS Event 1
37	ISS_DMA_REQ2	ISS Event 2
38	ISS_DMA_REQ3	ISS Event 3
39	ISS_DMA_REQ4	ISS Event 4

Copyright © 2011–2013, Texas Instruments Incorporated

Table 8-3. EDMA Default Synchronization Events (continued)

EVENT NUMBER	DEFAULT EVENT NAME	DEFAULT EVENT DESCRIPTION
40	CAN_IF1DMA	DCAN0 IF1
41	CAN_IF2DMA	DCAN0 IF2
42	SPI1XEVT0	SPI1 Transmit 0
43	SPI1REVT0	SPI1 Receive 0
44	SPI1XEVT1	SPI1 Transmit 1
45	SPI1REVT1	SPI1 Receive 1
46	–	Reserved
47	CAN_IF3DMA	DCAN0 IF3
48	TINT4	TIMER4
49	TINT5	TIMER5
50	TINT6	TIMER6
51	TINT7	TIMER7
52	GPMCEVT	GPMC
53	HDMIEVT	HDMI
54	–	Reserved
55	–	Reserved
56	AXEVT3	McASP3 Transmit
57	AREVT3	McASP3 Receive
58	I2CTXEVT0	I2C0 Transmit
59	I2CRXEVT0	I2C0 Receive
60	I2CTXEVT1	I2C1 Transmit
61	I2CRXEVT1	I2C1 Receive
62	AXEVT4	McASP4 Transmit
63	AREVT4	McASP4 Receive

Table 8-4. EDMA Multiplexed Synchronization Events

EVT_MUX_x VALUE	MULTIPLEXED EVENT NAME	MULTIPLEXED EVENT DESCRIPTION
0	-	Default Event
1	SDTXEVT2	SD2 Transmit
2	SDRXEVT2	SD2 Receive
3	I2CTXEVT2	I2C2 Transmit
4	I2CRXEVT2	I2C2 Receive
5	I2CTXEVT3	I2C3 Transmit
6	I2CRXEVT3	I2C3 Receive
7	UTXEVT3	UART3 Transmit
8	URXEVT3	UART3 Receive
9	UTXEVT4	UART4 Transmit
10	URXEVT4	UART4 Receive
11	UTXEVT5	UART5 Transmit
12	URXEVT5	UART5 Receive
13	CAN_IF1DMA	DCAN1 IF1
14	CAN_IF2DMA	DCAN1 IF2
15	CAN_IF3DMA	DCAN1 IF3
16	SPI2XEVT0	SPI2 Transmit 0
17	SPI2REVT0	SPI2 Receive 0
18	SPI2XEVT1	SPI2 Transmit 1

Copyright © 2011–2013, Texas Instruments Incorporated

Table 8-4. EDMA Multiplexed Synchronization Events (continued)

EVT_MUX_x VALUE	MULTIPLEXED EVENT NAME	MULTIPLEXED EVENT DESCRIPTION
19	SPI2REVT1	SPI2 Receive 1
20	SPI3XEVT0	SPI3 Transmit 0
21	SPI3REVT0	SPI3 Receive 0
22	–	Reserved
23	TINT1	TIMER1
24	TINT2	TIMER2
25	TINT3	TIMER3
26	AXEVT5	McASP5 Transmit
27	AREVT5	McASP5 Receive
28	EDMAEVT0	EDMA_EVT0 Pin
29	EDMAEVT1	EDMA_EVT1 Pin
30	EDMAEVT2	EDMA_EVT2 Pin
31	EDMAEVT3	EDMA_EVT3 Pin

8.4.2 EDMA Peripheral Register Descriptions

Table 8-5. EDMA Channel Controller (EDMA TPCC) Control Registers

HEX ADDRESS	ACRONYM	REGISTER NAME
0x4900 0000	PID	Peripheral Identification
0x4900 0004	CCCFG	EDMA3CC Configuration
0x4900 0100 - 0x4900 01FC	DCHMAP0-63	DMA Channel 0-63 Mappings
0x4900 0200	QCHMAP0	QDMA Channel 0 Mapping
0x4900 0204	QCHMAP1	QDMA Channel 1 Mapping
0x4900 0208	QCHMAP2	QDMA Channel 2 Mapping
0x4900 020C	QCHMAP3	QDMA Channel 3 Mapping
0x4900 0210	QCHMAP4	QDMA Channel 4 Mapping
0x4900 0214	QCHMAP5	QDMA Channel 5 Mapping
0x4900 0218	QCHMAP6	QDMA Channel 6 Mapping
0x4900 021C	QCHMAP7	QDMA Channel 7 Mapping
0x4900 0240	DMAQNUM0	DMA Queue Number 0
0x4900 0244	DMAQNUM1	DMA Queue Number 1
0x4900 0248	DMAQNUM2	DMA Queue Number 2
0x4900 024C	DMAQNUM3	DMA Queue Number 3
0x4900 0250	DMAQNUM4	DMA Queue Number 4
0x4900 0254	DMAQNUM5	DMA Queue Number 5
0x4900 0258	DMAQNUM6	DMA Queue Number 6
0x4900 025C	DMAQNUM7	DMA Queue Number 7
0x4900 0260	QDMAQNUM	QDMA Queue Number
0x4900 0284	QUEPRI	Queue Priority
0x4900 0300	EMR	Event Missed
0x4900 0304	EMRH	Event Missed High
0x4900 0308	EMCR	Event Missed Clear
0x4900 030C	EMCRH	Event Missed Clear High
0x4900 0310	QEMR	QDMA Event Missed
0x4900 0314	QEMCR	QDMA Event Missed Clear
0x4900 0318	CCERR	EDMA3CC Error

Copyright © 2011–2013, Texas Instruments Incorporated

Table 8-5. EDMA Channel Controller (EDMA TPCC) Control Registers (continued)

HEX ADDRESS	ACRONYM	REGISTER NAME
0x4900 031C	CCERRCLR	EDMA3CC Error Clear
0x4900 0320	EEVAL	Error Evaluate
0x4900 0340	DRAE0	DMA Region Access Enable for Region 0
0x4900 0344	DRAEH0	DMA Region Access Enable High for Region 0
0x4900 0348	DRAE1	DMA Region Access Enable for Region 1
0x4900 034C	DRAEH1	DMA Region Access Enable High for Region 1
0x4900 0350	DRAE2	DMA Region Access Enable for Region 2
0x4900 0354	DRAEH2	DMA Region Access Enable High for Region 2
0x4900 0358	DRAE3	DMA Region Access Enable for Region 3
0x4900 035C	DRAEH3	DMA Region Access Enable High for Region 3
0x4900 0360	DRAE4	DMA Region Access Enable for Region 4
0x4900 0364	DRAEH4	DMA Region Access Enable High for Region 4
0x4900 0368	DRAE5	DMA Region Access Enable for Region 5
0x4900 036C	DRAEH5	DMA Region Access Enable High for Region 5
0x4900 0370	DRAE6	DMA Region Access Enable for Region 6
0x4900 0374	DRAEH6	DMA Region Access Enable High for Region 6
0x4900 0378	DRAE7	DMA Region Access Enable for Region 7
0x4900 037C	DRAEH7	DMA Region Access Enable High for Region 7
0x4900 0380 - 0x4900 039C	QRAE0-7	QDMA Region Access Enable for Region 0-7
0x4900 0400 - 0x4900 04FC	Q0E0-Q3E15	Event Queue Entry Q0E0-Q3E15
0x4900 0600 - 0x4900 060C	QSTAT0-3	Queue Status 0-3
0x4900 0620	QWMTHRA	Queue Watermark Threshold A
0x4900 0640	CCSTAT	EDMA3CC Status
0x4900 0800	MPFAR	Memory Protection Fault Address
0x4900 0804	MPFSR	Memory Protection Fault Status
0x4900 0808	MPFCR	Memory Protection Fault Command
0x4900 080C	MPPAG	Memory Protection Page Attribute Global
0x4900 0810 - 0x4900 082C	MPPA0-7	Memory Protection Page Attribute 0-7
0x4900 1000	ER	Event
0x4900 1004	ERH	Event High
0x4900 1008	ECR	Event Clear
0x4900 100C	ECRH	Event Clear High
0x4900 1010	ESR	Event Set
0x4900 1014	ESRH	Event Set High
0x4900 1018	CER	Chained Event
0x4900 101C	CERH	Chained Event High
0x4900 1020	EER	Event Enable
0x4900 1024	EERH	Event Enable High
0x4900 1028	EECR	Event Enable Clear
0x4900 102C	EECRH	Event Enable Clear High
0x4900 1030	EESR	Event Enable Set
0x4900 1034	EESRH	Event Enable Set High
0x4900 1038	SER	Secondary Event
0x4900 103C	SERH	Secondary Event High
0x4900 1040	SECR	Secondary Event Clear
0x4900 1044	SECRH	Secondary Event Clear High
0x4900 1050	IER	Interrupt Enable

Copyright © 2011–2013, Texas Instruments Incorporated

Table 8-5. EDMA Channel Controller (EDMA TPCC) Control Registers (continued)

HEX ADDRESS	ACRONYM	REGISTER NAME
0x4900 1054	IERH	Interrupt Enable High
0x4900 1058	IECR	Interrupt Enable Clear
0x4900 105C	IECRH	Interrupt Enable Clear High
0x4900 1060	IESR	Interrupt Enable Set
0x4900 1064	IESRH	Interrupt Enable Set High
0x4900 1068	IPR	Interrupt Pending
0x4900 106C	IPRH	Interrupt Pending High
0x4900 1070	ICR	Interrupt Clear
0x4900 1074	ICRH	Interrupt Clear High
0x4900 1078	IEVAL	Interrupt Evaluate
0x4900 1080	QER	QDMA Event
0x4900 1084	QEER	QDMA Event Enable
0x4900 1088	QEECR	QDMA Event Enable Clear
0x4900 108C	QEESR	QDMA Event Enable Set
0x4900 1090	QSER	QDMA Secondary Event
0x4900 1094	QSECR	QDMA Secondary Event Clear
Shadow Region 0 Channel Registers		
0x4900 2000	ER	Event
0x4900 2004	ERH	Event High
0x4900 2008	ECR	Event Clear
0x4900 200C	ECRH	Event Clear High
0x4900 2010	ESR	Event Set
0x4900 2014	ESRH	Event Set High
0x4900 2018	CER	Chained Event
0x4900 201C	CERH	Chained Event High
0x4900 2020	EER	Event Enable
0x4900 2024	EERH	Event Enable High
0x4900 2028	EECR	Event Enable Clear
0x4900 202C	EECRH	Event Enable Clear High
0x4900 2030	EESR	Event Enable Set
0x4900 2034	EESRH	Event Enable Set High
0x4900 2038	SER	Secondary Event
0x4900 203C	SERH	Secondary Event High
0x4900 2040	SECR	Secondary Event Clear
0x4900 2044	SECRH	Secondary Event Clear High
0x4900 2050	IER	Interrupt Enable
0x4900 2054	IERH	Interrupt Enable High
0x4900 2058	IECR	Interrupt Enable Clear
0x4900 205C	IECRH	Interrupt Enable Clear High
0x4900 2060	IESR	Interrupt Enable Set
0x4900 2064	IESRH	Interrupt Enable Set High
0x4900 2068	IPR	Interrupt Pending
0x4900 206C	IPRH	Interrupt Pending High
0x4900 2070	ICR	Interrupt Clear
0x4900 2074	ICRH	Interrupt Clear High
0x4900 2078	IEVAL	Interrupt Evaluate
0x4900 2080	QER	QDMA Event

Table 8-5. EDMA Channel Controller (EDMA TPCC) Control Registers (continued)

HEX ADDRESS	ACRONYM	REGISTER NAME
0x4900 2084	QEER	QDMA Event Enable
0x4900 2088	QEECR	QDMA Event Enable Clear
0x4900 208C	QEESR	QDMA Event Enable Set
0x4900 2090	QSER	QDMA Secondary Event
0x4900 2094	QSECR	QDMA Secondary Event Clear
0x4900 2200 - 0x4900 2294	-	Shadow Region 1 Channels
0x4900 2400 - 0x4900 2494	-	Shadow Region 2 Channels
...		...
0x4900 2E00 - 0x4900 2E94	-	Shadow Channels for MP Space 7

Table 8-6. EDMA Transfer Controller (EDMA TPTC) Control Registers

TPTC0 HEX ADDRESS	TPTC1 HEX ADDRESS	TPTC2 HEX ADDRESS	TPTC3 HEX ADDRESS	ACRONYM	REGISTER NAME
0x4980 0000	0x4990 0000	0x49A0 0000	0x49B0 0000	PID	Peripheral Identification
0x4980 0004	0x4990 0004	0x49A0 0004	0x49B0 0004	TCCFG	EDMA3TC Configuration
0x4980 0100	0x4990 0100	0x49A0 0100	0x49B0 0100	TCSTAT	EDMA3TC Channel Status
0x4980 0120	0x4990 0120	0x49A0 0120	0x49B0 0120	ERRSTAT	Error Status
0x4980 0124	0x4990 0124	0x49A0 0124	0x49B0 0124	ERREN	Error Enable
0x4980 0128	0x4990 0128	0x49A0 0128	0x49B0 0128	ERRCLR	Error Clear
0x4980 012C	0x4990 012C	0x49A0 012C	0x49B0 012C	ERRDET	Error Details
0x4980 0130	0x4990 0130	0x49A0 0130	0x49B0 0130	ERRCMD	Error Interrupt Command
0x4980 0140	0x4990 0140	0x49A0 0140	0x49B0 0140	RDRATE	Read Rate Register
0x4980 0240	0x4990 0240	0x49A0 0240	0x49B0 0240	SAOPT	Source Active Options
0x4980 0244	0x4990 0244	0x49A0 0244	0x49B0 0244	SASRC	Source Active Source Address
0x4980 0248	0x4990 0248	0x49A0 0248	0x49B0 0248	SACNT	Source Active Count
0x4980 024C	0x4990 024C	0x49A0 024C	0x49B0 024C	SADST	Source Active Destination Address
0x4980 0250	0x4990 0250	0x49A0 0250	0x49B0 0250	SABIDX	Source Active Source B-Index
0x4980 0254	0x4990 0254	0x49A0 0254	0x49B0 0254	SAMPPRXY	Source Active Memory Protection Proxy
0x4980 0258	0x4990 0258	0x49A0 0258	0x49B0 0258	SACNTRLD	Source Active Count Reload
0x4980 025C	0x4990 025C	0x49A0 025C	0x49B0 025C	SASRCBREF	Source Active Source Address B-Reference
0x4980 0260	0x4990 0260	0x49A0 0260	0x49B0 0260	SADSTBREF	Source Active Destination Address B-Reference
0x4980 0280	0x4990 0280	0x49A0 0280	0x49B0 0280	DFCNTRLD	Destination FIFO Set Count Reload
0x4980 0284	0x4990 0284	0x49A0 0284	0x49B0 0284	DFSRCBREF	Destination FIFO Set Destination Address B Reference
0x4980 0288	0x4990 0288	0x49A0 0288	0x49B0 0288	DFDSTBREF	Destination FIFO Set Destination Address B Reference
0x4980 0300	0x4990 0300	0x49A0 0300	0x49B0 0300	DFOPT0	Destination FIFO Options 0
0x4980 0304	0x4990 0304	0x49A0 0304	0x49B0 0304	DFSRC0	Destination FIFO Source Address 0
0x4980 0308	0x4990 0308	0x49A0 0308	0x49B0 0308	DFCNT0	Destination FIFO Count 0
0x4980 030C	0x4990 030C	0x49A0 030C	0x49B0 030C	DFDST0	Destination FIFO Destination Address 0
0x4980 0310	0x4990 0310	0x49A0 0310	0x49B0 0310	DFBIDX0	Destination FIFO BIDX 0

Copyright © 2011–2013, Texas Instruments Incorporated

Table 8-6. EDMA Transfer Controller (EDMA TPTC) Control Registers (continued)

TPTC0 HEX ADDRESS	TPTC1 HEX ADDRESS	TPTC2 HEX ADDRESS	TPTC3 HEX ADDRESS	ACRONYM	REGISTER NAME
0x4980 0314	0x4990 0314	0x49A0 0314	0x49B0 0314	DFMPPRXY0	Destination FIFO Memory Protection Proxy 0
0x4980 0340	0x4990 0340	0x49A0 0340	0x49B0 0340	DFOPT1	Destination FIFO Options 1
0x4980 0344	0x4990 0344	0x49A0 0344	0x49B0 0344	DFSRC1	Destination FIFO Source Address 1
0x4980 0348	0x4990 0348	0x49A0 0348	0x49B0 0348	DFCNT1	Destination FIFO Count 1
0x4980 034C	0x4990 034C	0x49A0 034C	0x49B0 034C	DFDST1	Destination FIFO Destination Address 1
0x4980 0350	0x4990 0350	0x49A0 0350	0x49B0 0350	DFBIDX1	Destination FIFO BIDX 1
0x4980 0354	0x4990 0354	0x49A0 0354	0x49B0 0354	DFMPPRXY1	Destination FIFO Memory Protection Proxy 1
0x4980 0380	0x4990 0380	0x49A0 0380	0x49B0 0380	DFOPT2	Destination FIFO Options 2
0x4980 0384	0x4990 0384	0x49A0 0384	0x49B0 0384	DFSRC2	Destination FIFO Source Address 2
0x4980 0388	0x4990 0388	0x49A0 0388	0x49B0 0388	DFCNT2	Destination FIFO Count 2
0x4980 038C	0x4990 038C	0x49A0 038C	0x49B0 038C	DFDST2	Destination FIFO Destination Address 2
0x4980 0390	0x4990 0390	0x49A0 0390	0x49B0 0390	DFBIDX2	Destination FIFO BIDX 2
0x4980 0394	0x4990 0394	0x49A0 0394	0x49B0 0394	DFMPPRXY2	Destination FIFO Memory Protection Proxy 2
0x4980 03C0	0x4990 03C0	0x49A0 03C0	0x49B0 03C0	DFOPT3	Destination FIFO Options 3
0x4980 03C4	0x4990 03C4	0x49A0 03C4	0x49B0 03C4	DFSRC3	Destination FIFO Source Address 3
0x4980 03C8	0x4990 03C8	0x49A0 03C8	0x49B0 03C8	DFCNT3	Destination FIFO Count 3
0x4980 03CC	0x4990 03CC	0x49A0 03CC	0x49B0 03CC	DFDST3	Destination FIFO Destination Address 3
0x4980 03D0	0x4990 03D0	0x49A0 03D0	0x49B0 03D0	DFBIDX3	Destination FIFO BIDX 3
0x4980 03D4	0x4990 03D4	0x49A0 03D4	0x49B0 03D4	DFMPPRXY3	Destination FIFO Memory Protection Proxy 3

Copyright © 2011–2013, Texas Instruments Incorporated

8.5 Emulation Features and Capability

8.5.1 Advanced Event Triggering (AET)

The device supports Advanced Event Triggering (AET). This capability can be used to debug complex problems as well as understand performance characteristics of user applications. AET provides the following capabilities:

- **Hardware Program Breakpoints:** specify addresses or address ranges that can generate events such as halting the processor or triggering the trace capture.
- **Data Watchpoints:** specify data variable addresses, address ranges, or data values that can generate events such as halting the processor or triggering the trace capture.
- **Counters:** count the occurrence of an event or cycles for performance monitoring.
- **State Sequencing:** allows combinations of hardware program breakpoints and data watchpoints to precisely generate events for complex sequences.

For more information on AET, see the following documents:

- *Using Advanced Event Triggering to Find and Fix Intermittent Real-Time Bugs* application report (Literature Number: SPRA753)
- *Using Advanced Event Triggering to Debug Real-Time Problems in High Speed Embedded Microprocessor Systems* application report (Literature Number: SPRA387)

8.5.2 Trace

The device supports Trace at the Cortex™-A8, C674x, and System levels. Trace is a debug technology that provides a detailed, historical account of application code execution, timing, and data accesses. Trace collects, compresses, and exports debug information for analysis. The debug information can be exported to the Embedded Trace Buffer (ETB), or to the 5-pin Trace Interface (system trace only). Trace works in real-time and does not impact the execution of the system.

For more information on board design guidelines for Trace Advanced Emulation, see the *Emulation and Trace Headers Technical Reference Manual* (Literature Number: SPRU655).

8.5.3 IEEE 1149.1 JTAG

The JTAG (IEEE Standard 1149.1-1990 Standard-Test-Access Port and Boundary Scan Architecture) interface is used for BSDL testing and emulation of the device. The $\overline{\text{TRST}}$ pin only needs to be released when it is necessary to use a JTAG controller to debug the device or exercise the boundary scan functionality of the device. For maximum reliability, the device includes an internal pulldown (IPD) on the $\overline{\text{TRST}}$ pin to ensure that $\overline{\text{TRST}}$ is always asserted upon power up and the internal emulation logic of the device is always properly initialized. JTAG controllers from Texas Instruments actively drive $\overline{\text{TRST}}$ high. However, some third-party JTAG controllers may not drive $\overline{\text{TRST}}$ high but expect the use of a pullup resistor on $\overline{\text{TRST}}$. When using this type of JTAG controller, assert $\overline{\text{TRST}}$ to initialize the device after powerup and externally drive $\overline{\text{TRST}}$ high before attempting any emulation or boundary-scan operations.

The main JTAG features include:

- 32KB embedded trace buffer (ETB)
- 5-pin system trace interface for debug
- Supports Advanced Event Triggering (AET)
- All processors can be emulated via JTAG ports
- All functions on EMU pins of the device:
  - EMU[1:0] - cross-triggering, boot mode (WIR), STM trace
  - EMU[4:2] - STM trace only (single direction)

Copyright © 2011–2013, Texas Instruments Incorporated

8.5.3.1 JTAG ID (JTAGID) Register Description

Table 8-7. JTAG ID Register[(1)]

HEX ADDRESS	ACRONYM	REGISTER NAME
0x4814 0600	JTAGID	JTAG Identification Register[(2)]

(1) IEEE Standard 1149.1-1990 Standard-Test-Access Port and Boundary Scan Architecture.
(2) Read-only. Provides the device 32-bit JTAG ID.

The JTAG ID register is a read-only register that identifies to the customer the JTAG/device ID. For this device, the JTAG ID register resides at address location 0x4814 0600. The register hex value for the device is: 0x0B8F 202F. For the actual register bit names and their associated bit field descriptions, see Figure 8-5 and Table 8-8.

31 – 28	27 – 12	11 – 1	0
VARIANT (4-bit)	PART NUMBER (16-bit)	MANUFACTURER (11-bit)	LSB
R-xxxx	R-1011 1000 1111 0010	R-0000 0010 111	R-1

LEGEND: R/W = Read/Write; R = Read only; -*n* = value after reset

Figure 8-5. JTAG ID Register Description - Device Register Value: 0x0B8F 202F

Table 8-8. JTAG ID Register Selection Bit Descriptions

Bit	Field	Description
31:28	VARIANT	Variant (4-bit) value. Device value: xxxx. This value reflects the device silicon revision [For example, 0x0 (0000) for initial silicon revision (SR) 1.0]. • SR2.1, 0011, register value: 0x3B8F 202F • SR3.0, 0100, register value: 0x4B8F 202F For more detailed information on the current device silicon revision, see the *TMS320DM814x DaVinci™ Digital Media Processors Silicon Errata (Silicon Revisions 3.0, 2.1)* (Literature Number: SPRZ343).
27:12	PART NUMBER	Part Number (16-bit) value. Device value: 0xB8F2 (1011 1000 1111 0010)
11:1	MANUFACTURER	Manufacturer (11-bit) value. Device value: 0x017 (0000 0010 111)
0	LSB	LSB. This bit is read as a ""1 for this device.

8.5.3.2 JTAG Electrical Data/Timing

Table 8-9. Timing Requirements for IEEE 1149.1 JTAG

(see Figure 8-6)

NO.			OPP100/120/166		UNIT
			MIN	MAX	
1	$t_{c(TCK)}$	Cycle time, TCK	51.15		ns
1a	$t_{w(TCKH)}$	Pulse duration, TCK high (40% of t_c)	20.46		ns
1b	$t_{w(TCKL)}$	Pulse duration, TCK low (40% of t_c)	20.46		ns
3	$t_{su(TDI-TCK)}$	Input setup time, TDI valid to TCK high (20% of (t_c * 0.5))	5.115		ns
3	$t_{su(TMS-TCK)}$	Input setup time, TMS valid to TCK high (20% of (t_c * 0.5))	5.115		ns
4	$t_{h(TCK-TDI)}$	Input hold time, TDI valid from TCK high	10		ns
	$t_{h(TCK-TMS)}$	Input hold time, TMS valid from TCK high	10		ns

Table 8-10. Switching Characteristics Over Recommended Operating Conditions for IEEE 1149.1 JTAG

(see Figure 8-6)

NO.	PARAMETER		OPP100/120/166		UNIT
			MIN	MAX	
2	$t_{d(TCKL-TDOV)}$	Delay time, TCK low to TDO valid	0	23.575[(1)]	ns

(1) (0.5 * t_c) - 2

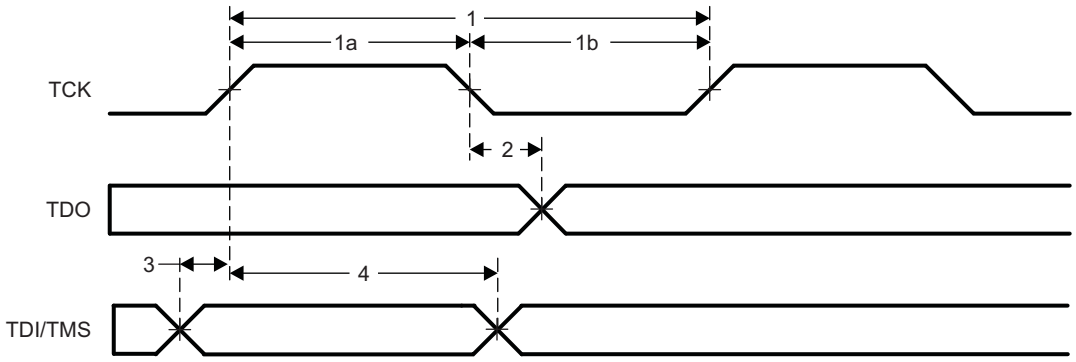

Figure 8-6. JTAG Timing

Table 8-11. Timing Requirements for IEEE 1149.1 JTAG With RTCK

(see Figure 8-6)

NO.			OPP100/120/166		UNIT
			MIN	MAX	
1	$t_{c(TCK)}$	Cycle time, TCK	51.15		ns
1a	$t_{w(TCKH)}$	Pulse duration, TCK high (40% of t_c)	20.46		ns
1b	$t_{w(TCKL)}$	Pulse duration, TCK low (40% of t_c)	20.46		ns
3	$t_{su(TDI-TCK)}$	Input setup time, TDI valid to TCK high (20% of (t_c * 0.5))	5.115		ns
3	$t_{su(TMS-TCK)}$	Input setup time, TMS valid to TCK high (20% of (t_c * 0.5))	5.115		ns
4	$t_{h(TCK-TDI)}$	Input hold time, TDI valid from TCK high	10		ns
	$t_{h(TCK-TMS)}$	Input hold time, TMS valid from TCK high	10		ns

Table 8-12. Switching Characteristics Over Recommended Operating Conditions for IEEE 1149.1 JTAG With RTCK

(see Figure 8-7)

NO.	PARAMETER		OPP100/120/166		UNIT
			MIN	MAX	
5	$t_{d(TCK-RTCK)}$	Delay time, TCK to RTCK with no selected subpaths (that is, ICEPick is the only tap selected - when the ARM is in the scan chain, the delay time is a function of the ARM functional clock.)	0	21	ns
6	$t_{c(RTCK)}$	Cycle time, RTCK	51.15		ns
7	$t_{w(RTCKH)}$	Pulse duration, RTCK high (40% of t_c)	20.46		ns
8	$t_{w(RTCKL)}$	Pulse duration, RTCK low (40% of t_c)	20.46		ns

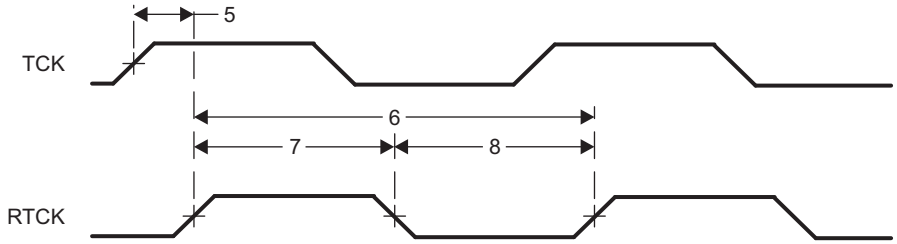

Figure 8-7. JTAG With RTCK Timing

Copyright © 2011–2013, Texas Instruments Incorporated

Table 8-13. Switching Characteristics Over Recommended Operating Conditions for STM Trace

(see Figure 8-8)

NO.	PARAMETER		OPP100/120/166		UNIT
			MIN	MAX	
1	$t_{w(EMUH50)}$	Pulse duration, EMUx high detected at 50% V_{OH} with 60/40 duty cycle	4 (1)		ns
	$t_{w(EMUH90)}$	Pulse duration, EMUx high detected at 90% V_{OH}	3.5		ns
2	$t_{w(EMUL50)}$	Pulse duration, EMUx low detected at 50% V_{OH} with 60/40 duty cycle	4 (1)		ns
	$t_{w(EMUL10)}$	Pulse duration, EMUx low detected at 10% V_{OH}	3.5		ns
3	$t_{sko(EMU)}$	Output skew time, time delay difference between EMUx pins configured as trace.	-2	0.5	ns
	$t_{skp(EMU)}$	Pulse skew, magnitude of difference between high-to-low (t_{PHL}) and low-to-high (t_{PLH}) propagation delays		1 (1)	ns
	$t_{sldp_o(EMU)}$	Output slew rate EMUx	3.3		V/ns

(1) This parameter applies to the maximum trace export frequency operating in a 40/60 duty cycle.

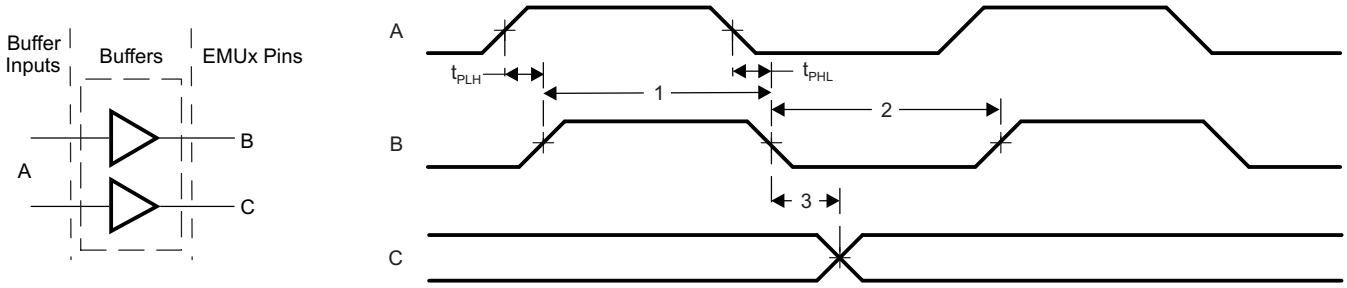

Figure 8-8. STM Trace Timing

8.6 Ethernet MAC Switch (EMAC SW)

The EMAC SW controls the flow of packet data between the device and two external Ethernet PHYs, with hardware flow control and quality-of-service (QOS) support. The EMAC SW contains a 3-port gigabit switch, where one port is internally connected and the other two ports are brought out externally. Each of the external EMAC ports supports 10Base-T (10 Mbits/second [Mbps]), and 100BaseTX (100 Mbps), in either half- or full-duplex mode, and 1000BaseT (1000 Mbps) in full-duplex mode.

The EMAC SW controls the flow of packet data from the device to the external PHYs. The EMAC0/1 ports on the device support four interface modes: Media Independent Interface (MII), Gigabit Media Independent Interface (GMII), Reduced Media Independent Interface (RMII) and Reduced Gigabit Media Independent Interface (RGMII). In addition, a single MDIO interface is pinned out to control the PHY configuration and status monitoring. Multiple external PHYs can be controlled by the MDIO interface.

The EMAC SW module conforms to the IEEE 802.3-2002 standard, describing the “Carrier Sense Multiple Access with Collision Detection (CSMA/CD) Access Method and Physical Layer” specifications. The IEEE 802.3 standard has also been adopted by ISO/IEC and re-designated as ISO/IEC 8802-3:2000(E). Deviating from this standard, the EMAC SW module does not use the Transmit Coding Error signal MTXER. Instead of driving the error pin when an underflow condition occurs on a transmitted frame, the EMAC SW will intentionally generate an incorrect checksum by inverting the frame CRC, so that the transmitted frame will be detected as an error by the network. In addition, the EMAC SW I/Os operate at 3.3 V and are not compatible with 2.5-V I/O signaling. Therefore, only Ethernet PHYs with 3.3-V I/O interface should be used.

In networking systems, packet transmission and reception are critical tasks. The communications port programming interface (CPPI) protocol maximizes the efficiency of interaction between the host software and communications modules. The CPPI block contains 2048 words of 32-bit buffer descriptor memory that holds up to 512 buffer descriptors.

For more detailed information on the EMAC SW module, see the *3PSW Ethernet Subsystem* chapter of the *TMS320DM814x DaVinci Digital Media Processors Technical Reference Manual* (Literature Number: SPRUGZ8).

8.6.1 EMAC Peripheral Register Descriptions

Table 8-14. Ethernet MAC Switch Registers

ARM/L3 MASTERS EMAC HEX ADDRESS RANGE	ACRONYM	REGISTER NAME
0x4A10 0000	CPSW_ID_VER	CPSW ID Version Register
0x4A10 0004	CPSW_CONTROL	CPSW Switch Control Register
0x4A10 0008	CPSW_SOFT_RESET	CPSW Soft Reset Register
0x4A10 000C	CPSW_STAT_PORT_EN	CPSW Statistics Port Enable Register
0x4A10 0010	CPSW_PTYPE	CPSW Transmit Priority Type Register
0x4A10 0014	CPSW_SOFT_IDLE	CPSW Software Idle
0x4A10 0018	CPSW_THRU_RATE	CPSW Throughput Rate
0x4A10 001C	CPSW_GAP_THRESH	CPSW CPGMAC_SL Short Gap Threshold
0x4A10 0020	CPSW_TX_START_WDS	CPSW Transmit Start Words
0x4A10 0024	CPSW_FLOW_CONTROL	CPSW Flow Control
0x4A10 0028	P0_MAX_BLKS	CPSW Port 0 Maximum FIFO Blocks Register
0x4A10 002C	P0_BLK_CNT	CPSW Port 0 FIFO Block Usage Count Register (Read Only)
0x4A10 0030	P0_TX_IN_CTL	CPSW Port 0 Transmit FIFO Control
0x4A10 0034	P0_PORT_VLAN	CPSW Port 0 VLAN Register
0x4A10 0038	P0_TX_PRI_MAP	CPSW Port 0 Tx Header Priority to Switch Priority Mapping Register

Copyright © 2011–2013, Texas Instruments Incorporated

Table 8-14. Ethernet MAC Switch Registers (continued)

ARM/L3 MASTERS EMAC HEX ADDRESS RANGE	ACRONYM	REGISTER NAME
0x4A10 003C	CPDMA_TX_PRI_MAP	CPSW CPDMA TX (Port 0 Rx) Packet Priority to Header Priority Mapping Register
0x4A10 0040	CPDMA_RX_CH_Map	CPSW CPDMA RX (Port 0 Tx) Switch Priority to DMA Channel Mapping Register
0x4A10 0050	P1_MAX_BLKS	CPSW Port 1 Maximum FIFO Blocks Register
0x4A10 0054	P1_BLK_CNT	CPSW Port 1 FIFO Block Usage Count (Read Only)
0x4A10 0058	P1_TX_IN_CTL	CPSW Port 1 Transmit FIFO Control
0x4A10 005C	P1_PORT_VLAN	CPSW Port 1 VLAN Register
0x4A10 0060	P1_TX_PRI_MAP	CPSW Port 1 Tx Header Priority to Switch Priority Mapping Register
0x4A10 0064	P1_TS_CTL	CPSW_3GF Port 1 Time Sync Control Register
0x4A10 0068	P1_TS_SEQ_LTYPE	CPSW_3GF Port 1 Time Sync LTYPE (and SEQ_ID_OFFSET)
0x4A10 006C	P1_TS_VLAN	CPSW_3GF Port 1 Time Sync VLAN2 and VLAN2 Register
0x4A10 0070	SL1_SA_LO	CPSW CPGMAC_SL1 Source Address Low Register
0x4A10 0074	SL1_SA_HI	CPSW CPGMAC_SL1 Source Address High Register
0x4A10 0078	P1_SEND_PERCENT	CPSW Port 1 Transmit Queue Send Percentages
0x4A10 007C – 0x4A10 008C	–	Reserved
0x4A10 0090	P2_MAX_BLKS	CPSW Port 2 Maximum FIFO Blocks Register
0x4A10 0094	P2_BLK_CNT	CPSW Port 2 FIFO Block Usage Count (Read Only)
0x4A10 0098	P2_TX_IN_CTL	CPSW Port 2 Transmit FIFO Control
0x4A10 009C	P2_PORT_VLAN	CPSW Port 2 VLAN Register
0x4A10 00A0	P2_TX_PRI_MAP	CPSW Port 2 Tx Header Priority to Switch Priority Mapping Register
0x4A10 00A4	P2_TS_CTL	CPSW_3GF Port 2 Time Sync Control Register
0x4A10 00A8	P2_TS_SEQ_LTYPE	CPSW_3GF Port 2 Time Sync LTYPE (and SEQ_ID_OFFSET)
0x4A10 00AC	P2_TS_VLAN	CPSW_3GF Port 2 Time Sync VLAN2 and VLAN2 Register
0x4A10 00B0	SL2_SA_LO	CPSW CPGMAC_SL2 Source Address Low Register
0x4A10 00B4	SL2_SA_HI	CPSW CPGMAC_SL2 Source Address High Register
0x4A10 00B8	P2_SEND_PERCENT	CPSW Port 2 Transmit Queue Send Percentages
0x4A10 00BC – 0x4A10 00FC	–	Reserved
0x4A10 0100	TX_IDVER	CPDMA_REGS TX Identification and Version Register
0x4A10 0104	TX_CONTROL	CPDMA_REGS TX Control Register
0x4A10 0108	TX_TEARDOWN	CPDMA_REGS TX Teardown Register
0x4A10 010C	–	Reserved
0x4A10 0110	RX_IDVER	CPDMA_REGS RX Identification and Version Register
0x4A10 0114	RX_CONTROL	CPDMA_REGS RX Control Register
0x4A10 0118	RX_TEARDOWN	CPDMA_REGS RX Teardown Register
0x4A10 011C	SOFT_RESET	CPDMA_REGS Soft Reset Register
0x4A10 0120	DMACONTROL	CPDMA_REGS CPDMA Control Register
0x4A10 0124	DMASTATUS	CPDMA_REGS CPDMA Status Register
0x4A10 0128	RX_BUFFER_OFFSET	CPDMA_REGS Receive Buffer Offset
0x4A10 012C	EMCONTROL	CPDMA_REGS Emulation Control
0x4A10 0130	TX_PRI0_RATE	CPDMA_REGS Transmit (Ingress) Priority 0 Rate
0x4A10 0134	TX_PRI1_RATE	CPDMA_REGS Transmit (Ingress) Priority 1 Rate
0x4A10 0138	TX_PRI2_RATE	CPDMA_REGS Transmit (Ingress) Priority 2 Rate
0x4A10 013C	TX_PRI3_RATE	CPDMA_REGS Transmit (Ingress) Priority 3 Rate
0x4A10 0140	TX_PRI4_RATE	CPDMA_REGS Transmit (Ingress) Priority 4 Rate
0x4A10 0144	TX_PRI5_RATE	CPDMA_REGS Transmit (Ingress) Priority 5 Rate

Copyright © 2011–2013, Texas Instruments Incorporated

Table 8-14. Ethernet MAC Switch Registers (continued)

ARM/L3 MASTERS EMAC HEX ADDRESS RANGE	ACRONYM	REGISTER NAME
0x4A10 0148	TX_PRI6_RATE	CPDMA_REGS Transmit (Ingress) Priority 6 Rate
0x4A10 014C	TX_PRI7_RATE	CPDMA_REGS Transmit (Ingress) Priority 7 Rate
0x4A10 0150 – 0x4A10 017C	–	Reserved
0x4A10 0180	TX_INTSTAT_RAW	CPDMA_INT TX Interrupt Status Register (Raw Value)
0x4A10 0184	TX_INTSTAT_MASKED	CPDMA_INT TX Interrupt Status Register (Masked Value)
0x4A10 0188	TX_INTMASK_SET	CPDMA_INT TX Interrupt Mask Set Register
0x4A10 018C	TX_INTMASK_CLEAR	CPDMA_INT TX Interrupt Mask Clear Register
0x4A10 0190	CPDMA_IN_VECTOR	CPDMA_INT Input Vector (Read Only)
0x4A10 0194	CPDMA_EOI_VECTOR	CPDMA_INT End Of Interrupt Vector
0x4A10 0198 – 0x4A10 019C	–	Reserved
0x4A10 01A0	RX_INTSTAT_RAW	CPDMA_INT RX Interrupt Status Register (Raw Value)
0x4A10 01A4	RX_INTSTAT_MASKED	CPDMA_INT RX Interrupt Status Register (Masked Value)
0x4A10 01A8	RX_INTMASK_SET	CPDMA_INT RX Interrupt Mask Set Register
0x4A10 01AC	RX_INTMASK_CLEAR	CPDMA_INT RX Interrupt Mask Clear Register
0x4A10 01B0	DMA_INTSTAT_RAW	CPDMA_INT DMA Interrupt Status Register (Raw Value)
0x4A10 01B4	DMA_INTSTAT_MASKED	CPDMA_INT DMA Interrupt Status Register (Masked Value)
0x4A10 01B8	DMA_INTMASK_SET	CPDMA_INT DMA Interrupt Mask Set Register
0x4A10 01BC	DMA_INTMASK_CLEAR	CPDMA_INT DMA Interrupt Mask Clear Register
0x4A10 01C0	RX0_PENDTHRESH	CPDMA_INT Receive Threshold Pending Register Channel 0
0x4A10 01C4	RX1_PENDTHRESH	CPDMA_INT Receive Threshold Pending Register Channel 1
0x4A10 01C8	RX2_PENDTHRESH	CPDMA_INT Receive Threshold Pending Register Channel 2
0x4A10 01CC	RX3_PENDTHRESH	CPDMA_INT Receive Threshold Pending Register Channel 3
0x4A10 01D0	RX4_PENDTHRESH	CPDMA_INT Receive Threshold Pending Register Channel 4
0x4A10 01D4	RX5_PENDTHRESH	CPDMA_INT Receive Threshold Pending Register Channel 5
0x4A10 01D8	RX6_PENDTHRESH	CPDMA_INT Receive Threshold Pending Register Channel 6
0x4A10 01DC	RX7_PENDTHRESH	CPDMA_INT Receive Threshold Pending Register Channel 7
0x4A10 01E0	RX0_FREEBUFFER	CPDMA_INT Receive Free Buffer Register Channel 0
0x4A10 01E4	RX1_FREEBUFFER	CPDMA_INT Receive Free Buffer Register Channel 1
0x4A10 01E8	RX2_FREEBUFFER	CPDMA_INT Receive Free Buffer Register Channel 2
0x4A10 01EC	RX3_FREEBUFFER	CPDMA_INT Receive Free Buffer Register Channel 3
0x4A10 01F0	RX4_FREEBUFFER	CPDMA_INT Receive Free Buffer Register Channel 4
0x4A10 01F4	RX5_FREEBUFFER	CPDMA_INT Receive Free Buffer Register Channel 5
0x4A10 01F8	RX6_FREEBUFFER	CPDMA_INT Receive Free Buffer Register Channel 6
0x4A10 01FC	RX7_FREEBUFFER	CPDMA_INT Receive Free Buffer Register Channel 7
0x4A10 0200	TX0_HDP	CPDMA_STATERAM TX Channel 0 Head Desc Pointer (1)
0x4A10 0204	TX1_HDP	CPDMA_STATERAM TX Channel 1 Head Desc Pointer (1)
0x4A10 0208	TX2_HDP	CPDMA_STATERAM TX Channel 2 Head Desc Pointer (1)
0x4A10 020C	TX3_HDP	CPDMA_STATERAM TX Channel 3 Head Desc Pointer (1)
0x4A10 0210	TX4_HDP	CPDMA_STATERAM TX Channel 4 Head Desc Pointer (1)
0x4A10 0214	TX5_HDP	CPDMA_STATERAM TX Channel 5 Head Desc Pointer (1)
0x4A10 0218	TX6_HDP	CPDMA_STATERAM TX Channel 6 Head Desc Pointer (1)
0x4A10 021C	TX7_HDP	CPDMA_STATERAM TX Channel 7 Head Desc Pointer (1)
0x4A10 0220	RX0_HDP	CPDMA_STATERAM RX 0 Channel 0 Head Desc Pointer (1)
0x4A10 0224	RX1_HDP	CPDMA_STATERAM RX 1 Channel 1 Head Desc Pointer (1)
0x4A10 0228	RX2_HDP	CPDMA_STATERAM RX 2 Channel 2 Head Desc Pointer (1)

(1) Denotes CPPI 3.0 registers.

Copyright © 2011–2013, Texas Instruments Incorporated

Table 8-14. Ethernet MAC Switch Registers (continued)

ARM/L3 MASTERS EMAC HEX ADDRESS RANGE	ACRONYM	REGISTER NAME
0x4A10 022C	RX3_HDP	CPDMA_STATERAM RX 3 Channel 3 Head Desc Pointer (1)
0x4A10 0230	RX4_HDP	CPDMA_STATERAM RX 4 Channel 4 Head Desc Pointer (1)
0x4A10 0234	RX5_HDP	CPDMA_STATERAM RX 5 Channel 5 Head Desc Pointer (1)
0x4A10 0238	RX6_HDP	CPDMA_STATERAM RX 6 Channel 6 Head Desc Pointer (1)
0x4A10 023C	RX7_HDP	CPDMA_STATERAM RX 7 Channel 7 Head Desc Pointer (1)
0x4A10 0240	TX0_CP	CPDMA_STATERAM TX Channel 0 Completion Pointer Register(1)
0x4A10 0244	TX1_CP	CPDMA_STATERAM TX Channel 1 Completion Pointer Register (1)
0x4A10 0248	TX2_CP	CPDMA_STATERAM TX Channel 2 Completion Pointer Register (1)
0x4A10 024C	TX3_CP	CPDMA_STATERAM TX Channel 3 Completion Pointer Register (1)
0x4A10 0250	TX4_CP	CPDMA_STATERAM TX Channel 4 Completion Pointer Register (1)
0x4A10 0254	TX5_CP	CPDMA_STATERAM TX Channel 5 Completion Pointer Register (1)
0x4A10 0258	TX6_CP	CPDMA_STATERAM TX Channel 6 Completion Pointer Register (1)
0x4A10 025C	TX7_CP	CPDMA_STATERAM TX Channel 7 Completion Pointer Register (1)
0x4A10 0260	RX0_CP	CPDMA_STATERAM RX Channel 0 Completion Pointer Register (1)
0x4A10 0264	RX1_CP	CPDMA_STATERAM RX Channel 1 Completion Pointer Register (2)
0x4A10 0268	RX2_CP	CPDMA_STATERAM RX Channel 2 Completion Pointer Register (2)
0x4A10 026C	RX3_CP	CPDMA_STATERAM RX Channel 3 Completion Pointer Register (2)
0x4A10 0270	RX4_CP	CPDMA_STATERAM RX Channel 4 Completion Pointer Register (2)
0x4A10 0274	RX5_CP	CPDMA_STATERAM RX Channel 5 Completion Pointer Register (2)
0x4A10 0278	Rx6_CP	CPDMA_STATERAM RX Channel 6 Completion Pointer Register (2)
0x4A10 027C	Rx7_CP	CPDMA_STATERAM RX Channel 7 Completion Pointer Register (2)
0x4A10 02C0 - 0x4A10 03FC	–	Reserved
0x4A10 0400	RXGOODFRAMES	CPSW_STATS Total Number of Good Frames Received
0x4A10 0404	RXBROADCASTFRAMES	CPSW_STATS Total Number of Good Broadcast Frames Received
0x4A10 0408	RXMULTICASTFRAMES	CPSW_STATS Total Number of Good Multicast Frames Received
0x4A10 040C	RXPAUSEFRAMES	CPSW_STATS PauseRxFrames
0x4A10 0410	RXCRCERRORS	CPSW_STATS Total Number of CRC Errors Frames Received
0x4A10 0414	RXALIGNCODEERRORS	CPSW_STATS Total Number of Alignment/Code Errors Received
0x4A10 0418	RXOVERSIZEDFRAMES	CPSW_STATS Total Number of Oversized Frames Received
0x4A10 041C	RXJABBERFRAMES	CPSW_STATS Total number of Jabber Frames Received
0x4A10 0420	RXUNDERSIZEDFRAMES	CPSW_STATS Total Number of Undersized Frames Received
0x4A10 0424	RXFRAGMENTS	CPSW_STATS RxFragments Received
0x4A10 0428 - 0x4A10 042C	–	Reserved. Read as Zero
0x4A10 0430	RXOCTETS	CPSW_STATS Total Number of Received Bytes in Good Frames
0x4A10 0434	TXGOODFRAMES	CPSW_STATS GoodTxFrames
0x4A10 0438	TXBROADCASTFRAMES	CPSW_STATS BroadcastTxFrames
0x4A10 043C	TXMULTICASTFRAMES	CPSW_STATS MulticastTxFrames
0x4A10 0440	TXPAUSEFRAMES	CPSW_STATS PauseTxFrames
0x4A10 0444	TXDEFERREDFRAMES	CPSW_STATS Deferred Frames
0x4A10 0448	TXCOLLISIONFRAMES	CPSW_STATS Collisions
0x4A10 044C	TXSINGLECOLLFRAMES	CPSW_STATS SingleCollisionTxFrames
0x4A10 0450	TXMULTCOLLFRAMES	CPSW_STATS MultipleCollisionTxFrames
0x4A10 0454	TXEXCESSIVECOLLISIONS	CPSW_STATS ExcessiveCollisions
0x4A10 0458	TXLATECOLLISIONS	CPSW_STATS LateCollisions

(2) Denotes CPPI 3.0 registers.

Copyright © 2011–2013, Texas Instruments Incorporated

Table 8-14. Ethernet MAC Switch Registers (continued)

ARM/L3 MASTERS EMAC HEX ADDRESS RANGE	ACRONYM	REGISTER NAME
0x4A10 045C	TXUNDERRUN	CPSW_STATS Transmit Underrun Error
0x4A10 0460	TXCARRIERSENSEERRORS	CPSW_STATS CarrierSenseErrors
0x4A10 0464	TXOCTETS	CPSW_STATS TxOctets
0x4A10 0468	64OCTETFRAMES	CPSW_STATS 64octetFrames
0x4A10 046C	65T127OCTETFRAMES	CPSW_STATS 65-127octetFrames
0x4A10 0470	128T255OCTETFRAMES	CPSW_STATS 128-255octetFrames
0x4A10 0474	256T511OCTETFRAMES	CPSW_STATS 256-511octetFrames
0x4A10 0478	512T1023OCTETFRAMES	CPSW_STATS 512-1023octetFrames
0x4A10 047C	1024TUPOCTETFRAMES	CPSW_STATS 1023-1518octetFrames
0x4A10 0480	NETOCTETS	CPSW_STATS NetOctets
0x4A10 0484	RXSOFOVERRUNS	CPSW_STATS Receive FIFO or DMA Start of Frame Overruns
0x4A10 0488	RXMOFOVERRUNS	CPSW_STATS Receive FIFO or DMA Mid of Frame Overruns
0x4A10 048C	RXDMAOVERRUNS	CPSW_STATS Receive DMA Start of Frame and Middle of Frame Overruns
0x4A10 0490 - 0x4A10 04FC	–	Reserved
0x4A10 0500	CPTS_IDVER	Identification and Version Register
0x4A10 0504	CPTS_CONTROL	Time Sync Control Register
0x4A10 0508	CPTS_RFTCLK_SEL	Reference Clock Select Register
0x4A10 050C	CPTS_TS_PUSH	Time Stamp Event Push Register
0x4A10 0510	CPTS_TS_LOAD_VAL	Time Stamp Load Value Register
0x4A10 0514	CPTSTS_LOAD_EN	Time Stamp Load Enable Register
0x4A10 0518 - 0x4A10 051C	–	Reserved
0x4A10 0520	CPTS_INTSTAT_RAW	Time Sync Interrupt Status Raw Register
0x4A10 0524	CPTS_INTSTAT_MASKED	Time Sync Interrupt Status Masked Register
0x4A10 0528	CPTS_INT_ENABLE	Time Sync Interrupt Enable Register
0x4A10 052C	–	Reserved
0x4A10 0530	CPTS_EVENT_POP	Event Interrupt Pop Register
0x4A10 0534	CPTS_EVENT_LOW	Lower 32-Bits of the Event Value
0x4A10 0538	CPTS_EVENT_HIGH	Upper 32-Bits of the Event Value
0x4A10 053C - 0x4A10 05FC	–	Reserved
0x4A10 0600	ALE_IDVER	Address Lookup Engine ID/Version Register
0x4A10 0604	–	Reserved
0x4A10 0608	ALE_CONTROL	Address Lookup Engine Control Register
0x4A10 060C	–	Reserved
0x4A10 0610	ALE_PRESCALE	Address Lookup Engine Prescale Register
0x4A10 0614	–	Reserved
0x4A10 0618	ALE_UNKNOWN_VLAN	Address Lookup Engine Unknown VLAN Register
0x4A10 061C	–	Reserved
0x4A10 0620	ALE_TBLCTL	Address Lookup Engine Table Control
0x4A10 0624 - 0x4A10 0630	–	Reserved
0x4A10 0634	ALE_TBLW2	Address Lookup Engine Table Word 2 Register
0x4A10 0638	ALE_TBLW1	Address Lookup Engine Table Word 1 Register
0x4A10 063C	ALE_TBLW0	Address Lookup Engine Table Word 0 Register
0x4A10 0640	ALE_PORTCTL0	Address Lookup Engine Port 0 Control Register
0x4A10 0644	ALE_PORTCTL1	Address Lookup Engine Port 1 Control Register

Copyright © 2011–2013, Texas Instruments Incorporated

Table 8-14. Ethernet MAC Switch Registers (continued)

ARM/L3 MASTERS EMAC HEX ADDRESS RANGE	ACRONYM	REGISTER NAME
0x4A10 0648	ALE_PORTCTL2	Address Lookup Engine Port 2 Control Register
0x4A10 064C	–	Reserved
0x4A10 0650	–	Reserved
0x4A10 0654	–	Reserved
0x4A10 0658 - 0x4A10 06FF	–	Reserved
0x4A10 0700	SL1_IDVER	CPGMAC_SL1 ID/Version Register
0x4A10 0704	SL1_MACCONTROL	CPGMAC_SL1 Mac Control Register
0x4A10 0708	SL1_MACSTATUS	CPGMAC_SL1 Mac Status Register
0x4A10 070C	SL1_SOFT_RESET	CPGMAC_SL1 Soft Reset Register
0x4A10 0710	SL1_RX_MAXLEN	CPGMAC_SL1 RX Maximum Length Register
0x4A10 0714	SL1_BOFFTEST	CPGMAC_SL1 Backoff Test Register
0x4A10 0718	SL1_RX_PAUSE	CPGMAC_SL1 Receive Pause Timer Register
0x4A10 071C	SL1_TX_PAUSE	CPGMAC_SL1 Transmit Pause Timer Register
0x4A10 0720	SL1_EMCONTROL	CPGMAC_SL1 Emulation Control Register
0x4A10 0724	SL1_RX_PRI_MAP	CPGMAC_SL1 Rx Pkt Priority to Header Priority Mapping Register
0x4A10 0728 - 0x4A10 073C	–	Reserved
0x4A10 0740	SL2_IDVER	CPGMAC_SL2 ID/Version Register
0x4A10 0744	SL2_MACCONTROL	CPGMAC_SL2 Mac Control Register
0x4A10 0748	SL2_MACSTATUS	CPGMAC_SL2 Mac Status Register
0x4A10 074C	SL2_SOFT_RESET	CPGMAC_SL2 Soft Reset Register
0x4A10 0750	SL2_RX_MAXLEN	CPGMAC_SL2 RX Maximum Length Register
0x4A10 0754	SL2_BOFFTEST	CPGMAC_SL2 Backoff Test Register
0x4A10 0758	SL2_RX_PAUSE	CPGMAC_SL2 Receive Pause Timer Register
0x4A10 075C	SL2_TX_PAUSE	CPGMAC_SL2 Transmit Pause Timer Register
0x4A10 0760	SL2_EMCONTROL	CPGMAC_SL2 Emulation Control
0x4A10 0764	SL2_RX_PRI_MAP	CPGMAC_SL2 Rx Pkt Priority to Header Priority Mapping Register
0x4A10 0768 - 0x4A10 07FF	–	Reserved
0x4A10 0800 - 0x4A10 08FF	see Table 8-27	MDIO Registers
0x4A10 0900	IDVER	Subsystem ID Version Register
0x4A10 0904	SOFT_RESET	Subsystem Soft Reset Register
0x4A10 0908	CONTROL	Subsystem Control Register
0x4A10 090C	INT_CONTROL	Subsystem Interrupt Control
0x4A10 0910	C0_RX_THRESH_EN	Subsystem Core 0 Receive Threshold Int Enable Register
0x4A10 0914	C0_RX_EN	Subsystem Core 0 Receive Interrupt Enable Register
0x4A10 0918	C0_TX_EN	Subsystem Core 0 Transmit Interrupt Enable Register
0x4A10 091C	C0_MISC_EN	Subsystem Core 0 Misc Interrupt Enable Register
0x4A10 0920	C1_RX_THRESH_EN	Subsystem Core 1 Receive Threshold Int Enable Register
0x4A10 0924	C1_RX_EN	Subsystem Core 1 Receive Interrupt Enable Register
0x4A10 0928	C1_TX_EN	Subsystem Core 1 Transmit Interrupt Enable Register
0x4A10 092C	C1_MISC_EN	Subsystem Core 1 Misc Interrupt Enable Register
0x4A10 0930	C2_RX_THRESH_EN	Subsystem Core 2 Receive Threshold Int Enable Register
0x4A10 0934	C2_RX_EN	Subsystem Core 2 Receive Interrupt Enable Register
0x4A10 0938	C2_TX_EN	Subsystem Core 2 Transmit Interrupt Enable Register
0x4A10 093C	C2_MISC_EN	Subsystem Core 2 Misc Interrupt Enable Register
0x4A10 0940	C0_RX_THRESH_STAT	Subsystem Core 0 Rx Threshold Masked Int Status Register
0x4A10 0944	C0_RX_STAT	Subsystem Core 0 Rx Interrupt Masked Int Status Register

Copyright © 2011–2013, Texas Instruments Incorporated

Table 8-14. Ethernet MAC Switch Registers (continued)

ARM/L3 MASTERS EMAC HEX ADDRESS RANGE	ACRONYM	REGISTER NAME
0x4A10 0948	C0_TX_STAT	Subsystem Core 0 Tx Interrupt Masked Int Status Register
0x4A10 094C	C0_MISC_STAT	Subsystem Core 0 Misc Interrupt Masked Int Status Register
0x4A10 0950	C1_RX_THRESH_STAT	Subsystem Core 1 Rx Threshold Masked Int Status Register
0x4A10 0954	C1_RX_STAT	Subsystem Core 1 Receive Masked Interrupt Status Register
0x4A10 0958	C1_TX_STAT	Subsystem Core 1 Transmit Masked Interrupt Status Register
0x4A10 095C	C1_MISC_STAT	Subsystem Core 1 Misc Masked Interrupt Status Register
0x4A10 0960	C2_RX_THRESH_STAT	Subsystem Core 2 Rx Threshold Masked Int Status Register
0x4A10 0964	C2_RX_STAT	Subsystem Core 2 Receive Masked Interrupt Status Register
0x4A10 0968	C2_TX_STAT	Subsystem Core 2 Transmit Masked Interrupt Status Register
0x4A10 096C	C2_MISC_STAT	Subsystem Core 2 Misc Masked Interrupt Status Register
0x4A10 0970	C0_RX_IMAX	Subsystem Core 0 Receive Interrupts Per Millisecond
0x4A10 0974	C0_TX_IMAX	Subsystem Core 0 Transmit Interrupts Per Millisecond
0x4A10 0978	C1_RX_IMAX	Subsystem Core 1 Receive Interrupts Per Millisecond
0x4A10 097C	C1_TX_IMAX	Subsystem Core 1 Transmit Interrupts Per Millisecond
0x4A10 0980	C2_RX_IMAX	Subsystem Core 2 Receive Interrupts Per Millisecond
0x4A10 0984	C2_TX_IMAX	Subsystem Core 2 Transmit Interrupts Per Millisecond
0x4A10 2000 -0x4A10 3FFF	CPPI_RAM	CPPI RAM(3)

(3) Denotes CPPI 3.0 registers.

Copyright © 2011–2013, Texas Instruments Incorporated

8.6.2 EMAC Electrical Data/Timing

8.6.2.1 EMAC MII and GMII Electrical Data/Timing

Table 8-15. Timing Requirements for EMAC[x]_MRCLK - [G]MII Operation

(see Figure 8-9)

NO.			OPP100/120/166						UNIT
			1000 Mbps (1 Gbps) (GMII Only)		100 Mbps		10 Mbps		
			MIN	MAX	MIN	MAX	MIN	MAX	
1	$t_{c(MRCLK)}$	Cycle time, EMAC[x]_MRCLK	8		40		400		ns
2	$t_{w(MRCLKH)}$	Pulse duration, EMAC[x]_MRCLK high	2.8		14		140		ns
3	$t_{w(MRCLKL)}$	Pulse duration, EMAC[x]_MRCLK low	2.8		14		140		ns
4	$t_{t(MRCLK)}$	Transition time, EMAC[x]_MRCLK		1		3		3	ns

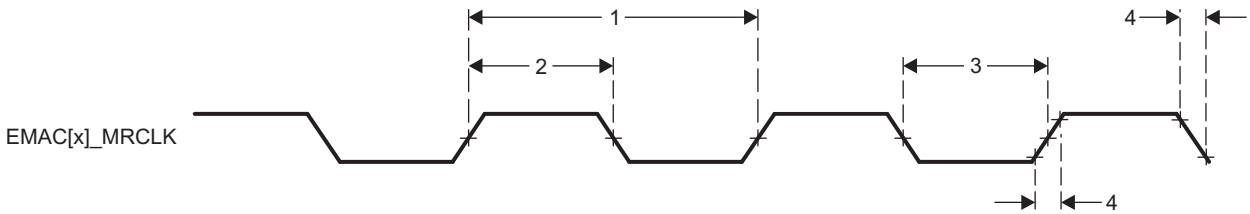

Figure 8-9. EMAC[x]_MRCLK Timing (EMAC Receive) - [G]MII Operation

Table 8-16. Timing Requirements for EMAC[x]_MTCLK - [G]MII Operation

(see Figure 8-14)

NO.			OPP100/120/166						UNIT
			1000 Mbps (1 Gbps) (GMII Only)		100 Mbps		10 Mbps		
			MIN	MAX	MIN	MAX	MIN	MAX	
1	$t_{c(MTCLK)}$	Cycle time, EMAC[x]_MTCLK	8		40		400		ns
2	$t_{w(MTCLKH)}$	Pulse duration, EMAC[x]_MTCLK high	2.8		14		140		ns
3	$t_{w(MTCLKL)}$	Pulse duration, EMAC[x]_MTCLK low	2.8		14		140		ns
4	$t_{t(MTCLK)}$	Transition time, EMAC[x]_MTCLK		1		3		3	ns

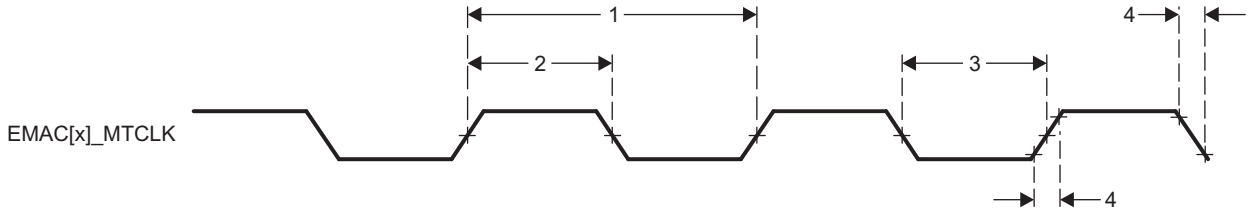

Figure 8-10. EMAC[x]_MTCLK Timing (EMAC Transmit) - [G]MII Operation

Table 8-17. Timing Requirements for EMAC [G]MII Receive 10/100/1000 Mbit/s

(see Figure 8-11)

NO.			OPP100/120/166				UNIT
			1000 Mbps (1 Gbps)		100/10 Mbps		
			MIN	MAX	MIN	MAX	
1	$t_{su(MRXD-MRCLK)}$ $t_{su(MRXDV-MRCLK)}$ $t_{su(MRXER-MRCLK)}$	Setup time, receive selected signals valid before EMAC[1:0]_MRCLK	2		8		ns
2	$t_{h(MRCLK-MRXD)}$ $t_{h(MRCLK-MRXDV)}$ $t_{h(MRCLK-MRXER)}$	Hold time, receive selected signals valid after EMAC[1:0]_MRCLK	0		8		ns

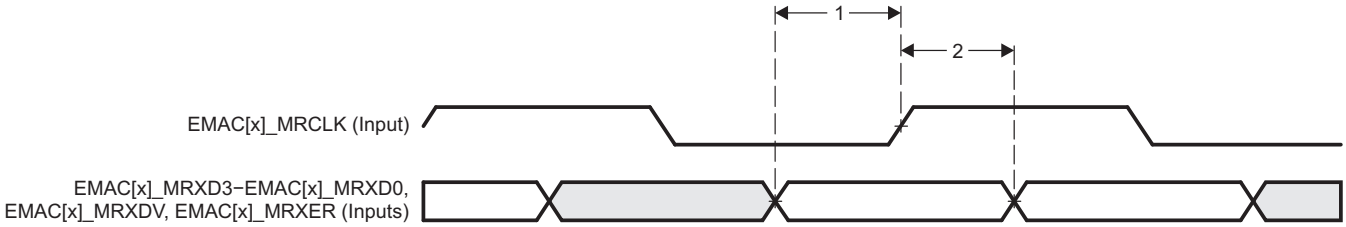

Figure 8-11. EMAC Receive Interface Timing [G]MII Operation

Table 8-18. Switching Characteristics Over Recommended Operating Conditions for EMAC [G]MII Transmit 10/100 Mbits/s

(see Figure 8-12)

NO.	PARAMETER		OPP100/120/166		UNIT
			100/10 Mbps		
			MIN	MAX	
1	$t_{d(MTXCLK-MTXD)}$ $t_{d(MTCLK-MTXEN)}$	Delay time, EMAC[x]_MTCLK to transmit selected signals valid	2.5	25	ns

Table 8-19. Switching Characteristics Over Recommended Operating Conditions for EMAC [G]MII Transmit 1000 Mbits/s

(see Figure 8-12)

NO.	PARAMETER		OPP100/120/166		UNIT
			1000 Mbps (1 Gbps)		
			MIN	MAX	
1	$t_{d(GMTCLK-MTXD)}$ $t_{d(GMTCLK-MTXEN)}$	Delay time, EMAC[x]_GMTCLK to transmit selected signals valid	0	5	ns

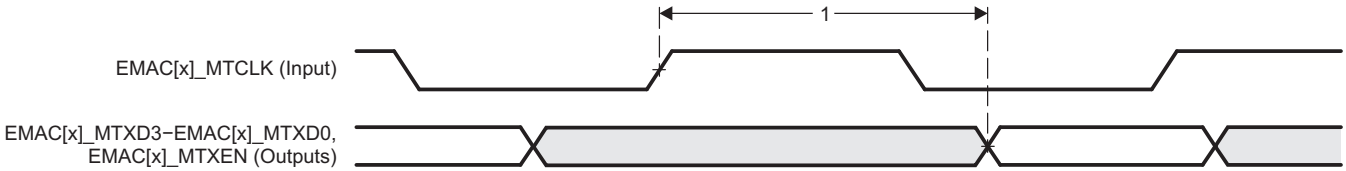

Figure 8-12. EMAC Transmit Interface Timing [G]MII Operation

Copyright © 2011–2013, Texas Instruments Incorporated

8.6.2.2 EMAC RMII Electrical Data/Timing

Table 8-20. Timing Requirements for EMAC[x]_RMREFCLK - RMII Operation

(see Figure 8-13)

NO.			OPP100/120/166		UNIT
			MIN	MAX	
1	$t_{c(RMREFCLK)}$	Cycle time, EMAC[x]_RMREFCLK	19.999	20.001	ns
2	$t_{w(RMREFCLKH)}$	Pulse duration, EMAC[x]_RMREFCLK high	7	13	ns
3	$t_{w(RMREFCLKL)}$	Pulse duration, EMAC[x]_RMREFCLK low	7	13	ns
4	$t_{t(RMREFCLK)}$	Transition time, EMAC[x]_RMREFCLK		3	ns

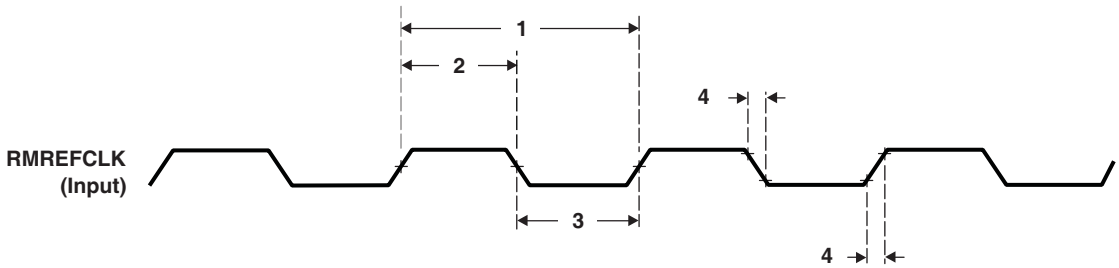

Figure 8-13. RMREFCLK Timing RMII Operation

Table 8-21. Timing Requirements for EMAC RMII Receive

(see Figure 8-13)

NO.			OPP100/120/166		UNIT
			MIN	MAX	
1	$t_{su(RMRXD-RMREFCLK)}$ $t_{su(RMCRSDV-RMREFCLK)}$ $t_{su(RMRXER-RMREFCLK)}$	Setup time, receive selected signals valid before EMAC[x]_RMREFCLK	4		ns
2	$t_{h(RMREFCLK-RMRXD)}$ $t_{h(RMREFCLK-RMCRSDV)}$ $t_{h(RMREFCLK-RMRXER)}$	Hold time, receive selected signals valid after EMAC[x]_RMREFCLK	2		ns

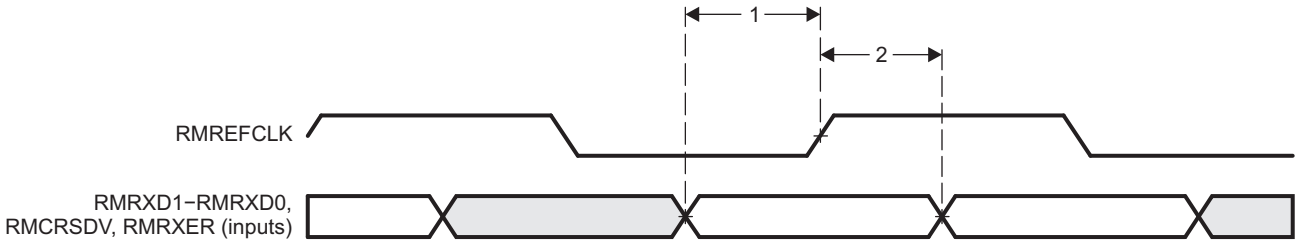

Figure 8-14. EMAC Receive Interface Timing RMII Operation

Table 8-22. Switching Characteristics Over Recommended Operating Conditions for EMAC RMII Transmit 10/100 Mbits/s

(see Figure 8-15)

NO.	PARAMETER		OPP100/120/166		UNIT
			MIN	MAX	
1	$t_{d(RMREFCLK-RMTXD)}$	Delay time, EMAC[x]_RMREFCLK high to EMAC[x]_RMTXD[x] valid	2.5	13	ns
2	$t_{dd(RMREFCLK-RMTXEN)}$	Delay time, EMAC[x]_RMREFCLK high to EMAC[x]_RMTXEN valid	2.5	13	

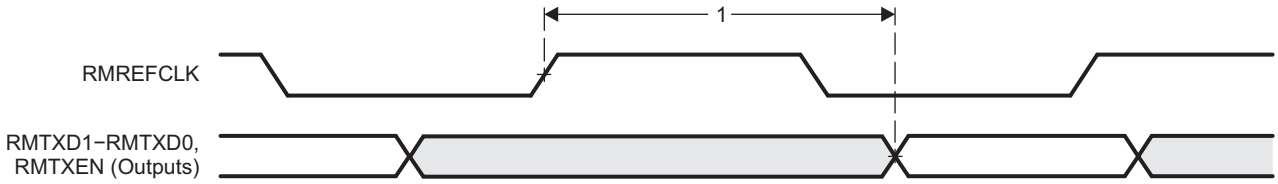

Figure 8-15. EMAC Transmit Interface Timing RMII Operation

8.6.2.3 EMAC RGMII Electrical Data/Timing

Table 8-23. Timing Requirements for EMAC[x]_RGRXC - RGMII Operation

(see Figure 8-16)

NO.				OPP100/120/166		UNIT
				MIN	MAX	
1	$t_{c(RGRXC)}$	Cycle time, EMAC[x]_RGRXC	10 Mbps	360	440	ns
			100 Mbps	36	44	
			1000 Mbps	7.2	8.8	
2	$t_{w(RGRXCH)}$	Pulse duration, EMAC[x]_RGRXC high	10 Mbps	$0.40*t_{c(RGRXC)}$	$0.60*t_{c(RGRXC)}$	ns
			100 Mbps	$0.40*t_{c(RGRXC)}$	$0.60*t_{c(RGRXC)}$	
			1000 Mbps	$0.45*t_{c(RGRXC)}$	$0.55*t_{c(RGRXC)}$	
3	$t_{w(RGRXCL)}$	Pulse duration, EMAC[x]_RGRXC low	10 Mbps	$0.40*t_{c(RGRXC)}$	$0.60*t_{c(RGRXC)}$	ns
			100 Mbps	$0.40*t_{c(RGRXC)}$	$0.60*t_{c(RGRXC)}$	
			1000 Mbps	$0.45*t_{c(RGRXC)}$	$0.55*t_{c(RGRXC)}$	
4	$t_{t(RGRXC)}$	Transition time, EMAC[x]_RGRXC	10 Mbps		0.75	ns
			100 Mbps		0.75	
			1000 Mbps		0.75	

Copyright © 2011–2013, Texas Instruments Incorporated

Table 8-24. Timing Requirements for EMAC RGMII Input Receive for 10/100/1000 Mbps(1)

(see Figure 8-16)

NO.			OPP100/120/166 MIN	OPP100/120/166 MAX	UNIT
5	$t_{su(RGRXD-RGRXCH)}$	Setup time, receive selected signals valid before EMAC[x]_RGRXC (at device) high/low	1.0		ns
6	$t_{h(RGRXCH-RGRXD)}$	Hold time, receive selected signals valid after EMAC[x]_RGRXC (at device) high/low	1.0		ns

(1) For RGMII, receive selected signals include: EMAC[x]_RGRXD[3:0] and EMAC[x]_RGRXCTL.

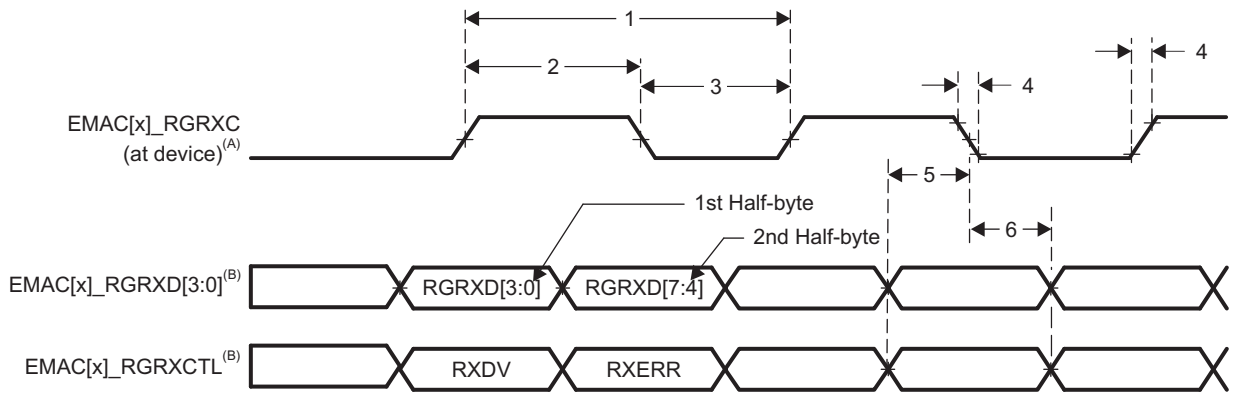

A. EMAC[x]_RGRXC must be externally delayed relative to the data and control pins. The internal delay can be enabled or disabled via the EMAC RGMIIx_ID_MODE register.

B. Data and control information is received using both edges of the clocks. EMAC[x]_RGRXD[3:0] carries data bits 3-0 on the rising edge of EMAC[x]_RGRXC and data bits 7-4 on the falling edge of EMAC[x]_RGRXC. Similarly, EMAC[x]_RGRXCTL carries RXDV on rising edge of EMAC[x]_RGRXC and RXERR on falling edge of EMAC[x]_RGRXC.

Figure 8-16. EMAC Receive Interface Timing [RGMII Operation]

Table 8-25. Switching Characteristics Over Recommended Operating Conditions for RGTXC - RGMII Operation for 10/100/1000 Mbit/s

(see Figure 8-17)

NO.				OPP100/120/166 MIN	OPP100/120/166 MAX	UNIT
1	$t_{c(RGTXC)}$	Cycle time, EMAC[x]_RGTXC	10 Mbps	360	440	ns
			100 Mbps	36	44	
			1000 Mbps	7.2	8.8	
2	$t_{w(RGTXCH)}$	Pulse duration, EMAC[x]_RGTXC high	10 Mbps	$0.40*t_{c(RGTXC)}$	$0.60*t_{c(RGTXC)}$	ns
			100 Mbps	$0.40*t_{c(RGTXC)}$	$0.60*t_{c(RGTXC)}$	
			1000 Mbps	$0.45*t_{c(RGTXC)}$	$0.55*t_{c(RGTXC)}$	
3	$t_{w(RGTXCL)}$	Pulse duration, EMAC[x]_RGTXC low	10 Mbps	$0.40*t_{c(RGTXC)}$	$0.60*t_{c(RGTXC)}$	ns
			100 Mbps	$0.40*t_{c(RGTXC)}$	$0.60*t_{c(RGTXC)}$	
			1000 Mbps	$0.45*t_{c(RGTXC)}$	$0.55*t_{c(RGTXC)}$	
4	$t_{t(RGTXC)}$	Transition time, EMAC[x]_RGTXC	10 Mbps		0.75	ns
			100 Mbps		0.75	
			1000 Mbps		0.75	

Table 8-26. Switching Characteristics Over Recommended Operating Conditions for EMAC RGMII Transmit[1]

(see Figure 8-17)

NO.	PARAMETER			OPP100/120/166		UNIT
				MIN	MAX	
5	$t_{su(RGTXD-RGTXCH)}$	Setup time, transmit selected signals valid before EMAC[x]_RGTXC (at device) high/low	Internal delay enabled	1.2		ns
6	$t_{h(RGTXCH-RGTXD)}$	Hold time, transmit selected signals valid after EMAC[x]_RGTXC (at device) high/low	Internal delay enabled	1.2		ns
7	$t_{sk(RGTXD-RGTXCH)}$	Transmit selected signals to EMAC[x]_RGTXC (at device) output skew	Internal delay disabled	-0.5	0.5	ns

(1) For RGMII, transmit selected signals include: EMAC[x]_RGTXD[3:0] and EMAC[x]_RGTXCTL.

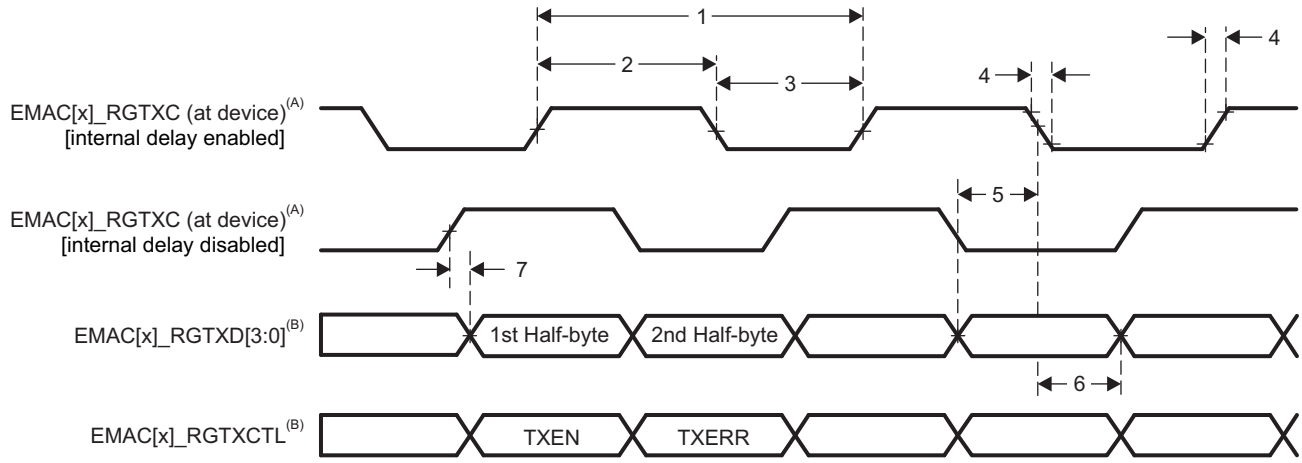

A. RGTXC is delayed internally before being driven to the EMAC[x]_RGTXC pin. The internal delay can be enabled or disabled via the EMAC RGMIIx_ID_MODE register.

B. Data and control information is transmitted using both edges of the clocks. EMAC[x]_RGTXD[3:0] carries data bits 3-0 on the rising edge of EMAC[x]_RGTXC and data bits 7-4 on the falling edge of EMAC[x]_RGTXC. Similarly, EMAC[x]_RGTXCTL carries TXEN on rising edge of EMAC[x]_RGTXC and TXERR of falling edge of EMAC[x]_RGTXC.

Figure 8-17. EMAC Transmit Interface Timing [RGMII Operation]

Copyright © 2011–2013, Texas Instruments Incorporated

8.6.3 Management Data Input/Output (MDIO)

The Management Data Input/Output (MDIO) module continuously polls all 32 MDIO addresses in order to enumerate all PHY devices in the system.

The MDIO module implements the 802.3 serial management interface to interrogate and control Ethernet PHYs using a shared two-wire bus. Host software uses the MDIO module to configure the auto-negotiation parameters of each PHY attached to the EMAC SW, retrieve the negotiation results, and configure required parameters in the EMAC SW module for correct operation. The module is designed to allow almost transparent operation of the MDIO interface, with very little maintenance from the core processor. A single MDIO interface is pinned out to control the PHY configuration and status monitoring. Multiple external PHYs can be controlled by the MDIO interface.

For more detailed information on the MDIO peripheral, see the *3PSW Ethernet Subsystem* chapter of the *TMS320DM814x DaVinci Digital Media Processors Technical Reference Manual* (Literature Number: SPRUGZ8).

8.6.3.1 MDIO Peripheral Register Descriptions

Table 8-27. MDIO Registers

HEX ADDRESS	ACRONYM	REGISTER NAME
0x4A10 0800	VERSION	MDIO Version
0x4A10 0804	CONTROL	MDIO Control
0x4A10 0808	ALIVE	PHY Alive Status
0x4A10 080C	LINK	PHY Link Status
0x4A10 0810	LINKINTRAW	MDIO Link Status Change Interrupt (Unmasked)
0x4A10 0814	LINKINTMASKED	MDIO Link Status Change Interrupt (Masked)
0x4A10 0818 - 0x4A10 081C	-	Reserved
0x4A10 0820	USERINTRAW	MDIO User Command Complete Interrupt (Unmasked)
0x4A10 0824	USERINTMASKED	MDIO User Command Complete Interrupt (Masked)
0x4A10 0828	USERINTMASKSET	MDIO User Command Complete Interrupt Mask Set
0x4A10 082C	USERINTMASKCLEAR	MDIO User Command Complete Interrupt Mask Clear
0x4A10 0830 - 0x4A10 087C	-	Reserved
0x4A10 0880	USERACCESS0	MDIO User Access 0
0x4A10 0884	USERPHYSEL0	MDIO User PHY Select 0
0x4A10 0888	USERACCESS1	MDIO User Access 1
0x4A10 088C	USERPHYSEL1	MDIO User PHY Select 1
0x4A10 0990 - 0x4A10 08FF	-	Reserved

8.6.3.2 MDIO Electrical Data/Timing

Table 8-28. Timing Requirements for MDIO Input

(see Figure 8-18)

NO.			OPP100/122/166		UNIT
			MIN	MAX	
1	$t_{c(MDCLK)}$	Cycle time, MDCLK	400		ns
	$t_{w(MDCLK)}$	Pulse duration, MDCLK high or low	180		ns
4	$t_{su(MDIO-MDCLKH)}$	Setup time, MDIO data input valid before MDCLK high	20		ns
5	$t_{h(MDCLKH-MDIO)}$	Hold time, MDIO data input valid after MDCLK high	0		ns

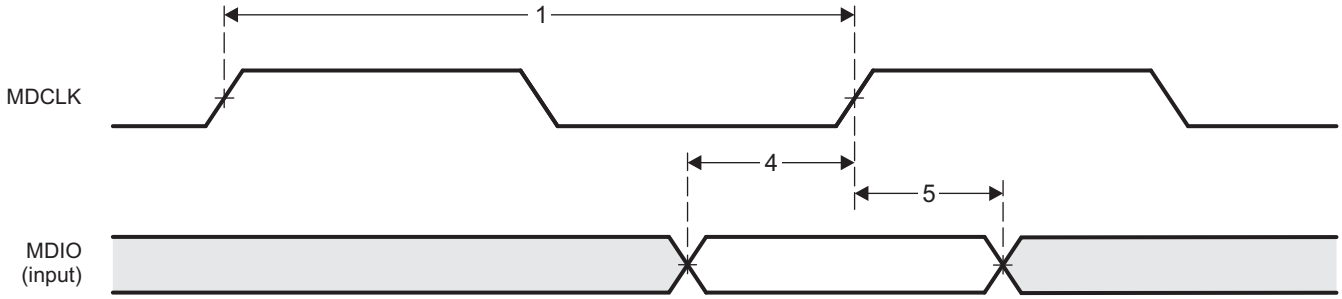

Figure 8-18. MDIO Input Timing

Table 8-29. Switching Characteristics Over Recommended Operating Conditions for MDIO Output

(see Figure 8-19)

NO.	PARAMETER		OPP100/122/1166		UNIT
			MIN	MAX	
7	$t_{d(MDCLKL-MDIO)}$	Delay time, MDCLK low to MDIO data output valid		100	ns

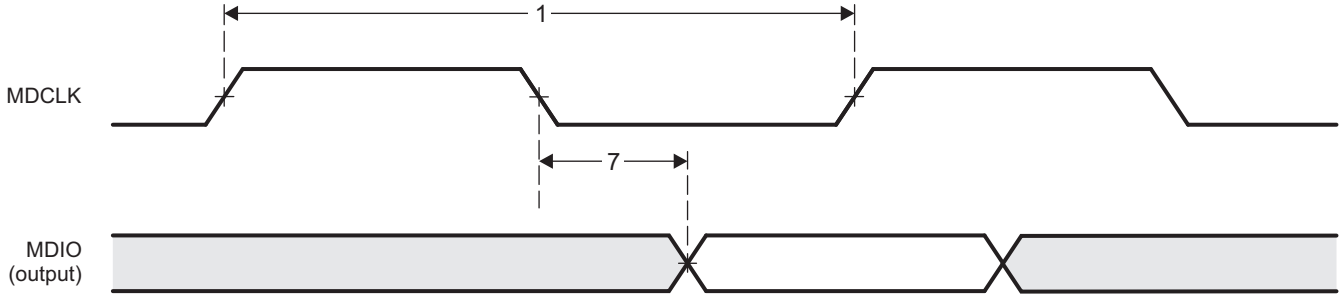

Figure 8-19. MDIO Output Timing

Copyright © 2011–2013, Texas Instruments Incorporated

8.7 General-Purpose Input/Output (GPIO)

The GPIO peripheral provides general-purpose pins that can be configured as either inputs or outputs. When configured as an output, a write to an internal register controls the state driven on the output pin. When configured as an input, the state of the input is detectable by reading the state of an internal register. In addition, the GPIO peripheral can produce CPU interrupts in different interrupt generation modes. The GPIO peripheral provides generic connections to external devices.

The device contains four GPIO modules and each GPIO module is made up of 32 identical channels.

The device GPIO peripheral supports the following:

- Up to 128 1.8-V/3.3-V GPIO pins, GP0[0:31], GP1[0:31], GP2[0:31], and GP3[0:31] (the exact number available varies as a function of the device configuration). Each channel can be configured to be used in the following applications:
  - Data input/output
  - Keyboard interface with a de-bouncing cell
  - Synchronous interrupt generation (in active mode) upon the detection of external events (signal transitions and/or signal levels).
- Synchronous interrupt requests from each channel are processed by four identical interrupt generation sub-modules to be used independently by the ARM, DSP, or Media Controller. Interrupts can be triggered by rising and/or falling edge, specified for each interrupt-capable GPIO signal.
- Shared registers can be accessed through "Set and Clear" protocol. Software writes 1 to corresponding bit position or positions to set or to clear the GPIO signal. This allows multiple software processes to toggle GPIO output signals without critical section protection (disable interrupts, program GPIO, re-enable interrupts, to prevent context switching to another process during GPIO programming).
- Separate input/output registers.
- Output register in addition to set/clear so that, if preferred by software, some GPIO output signals can be toggled by direct write to the output register.
- Output register, when read, reflects output drive status. This, in addition to the input register reflecting pin status and open-drain I/O cell, allows wired logic to be implemented.

For more detailed information on GPIOs, see the *General-Purpose I/O (GPIO) Interface* chapter of the *TMS320DM814x DaVinci Digital Media Processors Technical Reference Manual* (Literature Number: SPRUGZ8).

8.7.1 GPIO Peripheral Register Descriptions

Table 8-30. GPIO Registers

HEX ADDRESS					
GPIO0	**GPIO1**	**GPIO2**	**GPIO3**	**ACRONYM**	**REGISTER NAME**
0x4803 2000	0x4804 C000	0x481A C000	0x481A E000	GPIO_REVISION	GPIO Revision
0x4803 2010	0x4804 C010	0x481A C010	0x481A E010	GPIO_SYSCONFIG	System Configuration
0x4803 2020	0x4804 C020	0x481A C020	0x481A E020	GPIO_EOI	End of Interrupt
0x4803 2024	0x4804 C024	0x481A C024	0x481A E024	GPIO_IRQSTATUS_RAW_0	Status Raw for Interrupt 1
0x4803 2028	0x4804 C028	0x481A C028	0x481A E028	GPIO_IRQSTATUS_RAW_1	Status Raw for Interrupt 2
0x4803 202C	0x4804 C02C	0x481A C02C	0x481A E02C	GPIO_IRQSTATUS_0	Status for Interrupt 1
0x4803 2030	0x4804 C030	0x481A C030	0x481A E030	GPIO_IRQSTATUS_1	Status for Interrupt 2
0x4803 2034	0x4804 C034	0x481A C034	0x481A E034	GPIO_IRQSTATUS_SET_0	Enable Set for Interrupt 1

Table 8-30. GPIO Registers (continued)

HEX ADDRESS					
GPIO0	**GPIO1**	**GPIO2**	**GPIO3**	**ACRONYM**	**REGISTER NAME**
0x4803 2038	0x4804 C038	0x481A C038	0x481A E038	GPIO_IRQSTATUS_SET_1	Enable Set for Interrupt 2
0x4803 203C	0x4804 C03C	0x481A C03C	0x481A E03C	GPIO_IRQSTATUS_CLR_0	Enable Clear for Interrupt 1
0x4803 2040	0x4804 C040	0x481A C040	0x481A E040	GPIO_IRQSTATUS_CLR_1	Enable Clear for Interrupt 2
0x4803 2044	0x4804 C044	0x481A C044	0x481A E044	GPIO_IRQWAKEN_0	Wakeup Enable for Interrupt 1
0x4803 2048	0x4804 C048	0x481A C048	0x481A E048	GPIO_IRQWAKEN_1	Wakeup Enable for Interrupt 2
0x4803 2114	0x4804 C114	0x481A C114	0x481A E114	GPIO_SYSSTATUS	System Status
0x4803 2130	0x4804 C130	0x481A C130	0x481A E130	GPIO_CTRL	Module Control
0x4803 2134	0x4804 C134	0x481A C134	0x481A E134	GPIO_OE	Output Enable
0x4803 2138	0x4804 C138	0x481A C138	0x481A E138	GPIO_DATAIN	Data Input
0x4803 213C	0x4804 C13C	0x481A C13C	0x481A E13C	GPIO_DATAOUT	Data Output
0x4803 2140	0x4804 C140	0x481A C140	0x481A E140	GPIO_LEVELDETECT0	Detect Low Level
0x4803 2144	0x4804 C144	0x481A C144	0x481A E144	GPIO_LEVELDETECT1	Detect High Level
0x4803 2148	0x4804 C148	0x481A C148	0x481A E148	GPIO_RISINGDETECT	Detect Rising Edge
0x4803 214C	0x4804 C14C	0x481A C14C	0x481A E14C	GPIO_FALLINGDETECT	Detect Falling Edge
0x4803 2150	0x4804 C150	0x481A C150	0x481A E150	GPIO_DEBOUNCENABLE	Debouncing Enable
0x4803 2154	0x4804 C154	0x481A C154	0x481A E154	GPIO_DEBOUNCINGTIME	Debouncing Value
0x4803 2190	0x4804 C190	0x481A C190	0x481A E190	GPIO_CLEARDATAOUT	Clear Data Output
0x4803 2194	0x4804 C194	0x481A C194	0x481A E194	GPIO_SETDATAOUT	Set Data Output

Copyright © 2011–2013, Texas Instruments Incorporated

8.7.2 GPIO Electrical Data/Timing

Table 8-31. Timing Requirements for GPIO Inputs

(see Figure 8-20)

NO.			OPP100/122/166		UNIT
			MIN	MAX	
1	$t_{w(GPIH)}$	Pulse duration, GPx[31:0] input high	12P (1)		ns
2	$t_{w(GPIL)}$	Pulse duration, GPx[31:0] input low	12P (1)		ns

(1) P = Module clock.

Table 8-32. Switching Characteristics Over Recommended Operating Conditions for GPIO Outputs

(see Figure 8-20)

NO.	PARAMETER		OPP100/122/166		UNIT
			MIN	MAX	
3	$t_{w(GPOH)}$	Pulse duration, GPx[31:0] output high	36P-8 (1)		ns
4	$t_{w(GPOL)}$	Pulse duration, GPx[31:0] output low	36P-8 (1)		ns

(1) P = Module clock.

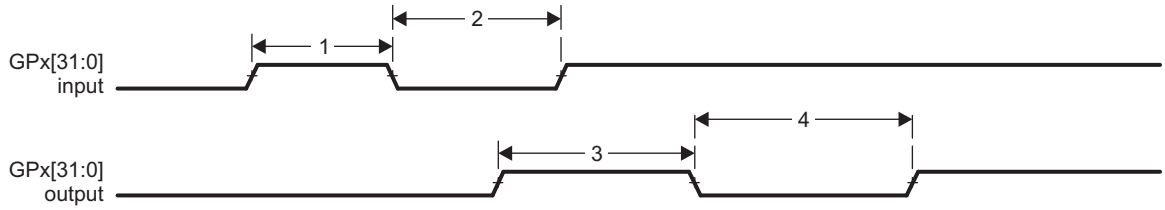

Figure 8-20. GPIO Port Timing

8.8 General-Purpose Memory Controller (GPMC) and Error Location Module (ELM)

The GPMC is a device memory controller used to provide a glueless interface to external memory devices such as NOR Flash, NAND Flash (with BCH and Hamming Error Code Detection for 8-bit or 16-bit NAND Flash), SRAM, and Pseudo-SRAM. The GPMC includes flexible asynchronous protocol control for interface to SRAM-like memories and custom logic (FPGA, CPLD, ASICs, etc.).

Other supported features include:

- 8-/16-bit wide multiplexed address/data bus
- 512 MBytes maximum addressing capability divided among up to eight chip selects
- Non-multiplexed address/data mode
- Pre-fetch and write posting engine associated with system DMA to get full performance from NAND device with minimum impact on NOR/SRAM concurrent access.

The device also contains an Error Locator Module (ELM) which is used to extract error addresses from syndrome polynomials generated using a BCH algorithm. Each of these polynomials gives a status of the read operations for a 512 bytes block from a NAND flash and its associated BCH parity bits, plus optionally spare area information. The ELM has the following features:

- 4-bit, 8-bit and 16-bit per 512byte block error location based on BCH algorithms
- Eight simultaneous processing contexts
- Page-based and continuous modes
- Interrupt generation on error location process completion
  - When the full page has been processed in page mode
  - For each syndrome polynomial in continuous mode

 Copyright © 2011–2013, Texas Instruments Incorporated

8.8.1 GPMC and ELM Peripherals Register Descriptions

Table 8-33. GPMC Registers

HEX ADDRESS	ACRONYM	REGISTER NAME
0x5000 0000	GPMC_REVISION	GPMC Revision
0x5000 0010	GPMC_SYSCONFIG	System Configuration
0x5000 0014	GPMC_SYSSTATUS	System Status
0x5000 0018	GPMC_IRQSTATUS	Status for Interrupt
0x5000 001C	GPMC_IRQENABLE	Interrupt Enable
0x5000 0040	GPMC_TIMEOUT_CONTROL	Timeout Counter Start Value
0x5000 0044	GPMC_ERR_ADDRESS	Error Address
0x5000 0048	GPMC_ERR_TYPE	Error Type
0x5000 0050	GPMC_CONFIG	GPMC Global Configuration
0x5000 0054	GPMC_STATUS	GPMC Global Status
0x5000 0060 + (0x0000 0030 * i)(1)	GPMC_CONFIG1_0 - GPMC_CONFIG1_7	Parameter Configuration 1_0-7
0x5000 0064 + (0x0000 0030 * i)(1)	GPMC_CONFIG2_0 - GPMC_CONFIG2_7	Parameter Configuration 2_0-7
0x5000 0068 + (0x0000 0030 * i)(1)	GPMC_CONFIG3_0 - GPMC_CONFIG3_7	Parameter Configuration 3_0-7
0x5000 006C + (0x0000 0030 * i)(1)	GPMC_CONFIG4_0 - GPMC_CONFIG4_7	Parameter Configuration 4_0-7
0x5000 0070 + (0x0000 0030 * i)(1)	GPMC_CONFIG5_0 - GPMC_CONFIG5_7	Parameter Configuration 5_0-7
0x5000 0074 + (0x0000 0030 * i)(1)	GPMC_CONFIG6_0 - GPMC_CONFIG6_7	Parameter Configuration 6_0-7
0x5000 0078 + (0x0000 0030 * i)(1)	GPMC_CONFIG7_0 - GPMC_CONFIG7_7	Parameter Configuration 7_0-7
0x5000 007C + (0x0000 0030 * i)(1)	GPMC_NAND_COMMAND_0 - GPMC_NAND_COMMAND_7	NAND Command 0-7
0x5000 0080 + (0x0000 0030 * i)(1)	GPMC_NAND_ADDRESS_0 - GPMC_NAND_ADDRESS_7	NAND Address 0-7
0x5000 0084 + (0x0000 0030 * i)(1)	GPMC_NAND_DATA_0 - GPMC_NAND_DATA_7	NAND Data 0-7
0x5000 01E0	GPMC_PREFETCH_CONFIG1	Prefetch Configuration 1
0x5000 01E4	GPMC_PREFETCH_CONFIG2	Prefetch Configuration 2
0x5000 01EC	GPMC_PREFETCH_CONTROL	Prefetch Control
0x5000 01F0	GPMC_PREFETCH_STATUS	Prefetch Status
0x5000 01F4	GPMC_ECC_CONFIG	ECC Configuration
0x5000 01F8	GPMC_ECC_CONTROL	ECC Control
0x5000 01FC	GPMC_ECC_SIZE_CONFIG	ECC Size Configuration
0x5000 0200 + (0x0000 0004 * j)(2)	GPMC_ECC0_RESULT - GPMC_ECC8_RESULT	ECC0-8 Result
0x5000 0240 + (0x0000 0010 * i)(1)	GPMC_BCH_RESULT0_0 - GPMC_BCH_RESULT0_7	BCH Result 0_0-7
0x5000 0244 + (0x0000 0010 * i)(1)	GPMC_BCH_RESULT1_0 - GPMC_BCH_RESULT1_7	BCH Result 1_0-7
0x5000 0248 + (0x0000 0010 * i)(1)	GPMC_BCH_RESULT2_0 - GPMC_BCH_RESULT2_7	BCH Result 2_0-7
0x5000 024C + (0x0000 0010 * i)(1)	GPMC_BCH_RESULT3_0 - GPMC_BCH_RESULT3_7	BCH Result 3_0-7
0x5000 0300 + (0x0000 0010 * i)(1)	GPMC_BCH_RESULT4_0 - GPMC_BCH_RESULT4_7	BCH Result 4_0-7

(1) i = 0 to 7
(2) j = 0 to 8

Copyright © 2011–2013, Texas Instruments Incorporated

Table 8-33. GPMC Registers (continued)

HEX ADDRESS	ACRONYM	REGISTER NAME
0x5000 0304 + (0x0000 0010 * i)[(1)]	GPMC_BCH_RESULT5_0 - GPMC_BCH_RESULT5_7	BCH Result 5_0-7
0x5000 0308 + (0x0000 0010 * i)[(1)]	GPMC_BCH_RESULT6_0 - GPMC_BCH_RESULT6_7	BCH Result 6_0-7
0x5000 02D0	GPMC_BCH_SWDATA	BCH Data

Copyright © 2011–2013, Texas Instruments Incorporated

8.8.2 GPMC Electrical Data/Timing

8.8.2.1 GPMC/NOR Flash Interface Synchronous Mode Timing (Non-Multiplexed and Multiplexed Modes)

Table 8-34. Timing Requirements for GPMC/NOR Flash Interface - Synchronous Mode

(see Figure 8-21, Figure 8-22, Figure 8-23 for Non-Multiplexed Modes)
(see Figure 8-24, Figure 8-25, Figure 8-26 for Multiplexed Modes)

NO.			OPP100/120/166		UNIT
			MIN	MAX	
13	$t_{su(DV-CLKH)}$	Setup time, read GPMC_D[15:0] valid before GPMC_CLK high	4		ns
14	$t_{h(CLKH-DV)}$	Hold time, read GPMC_D[15:0] valid after GPMC_CLK high	3		ns
22	$t_{su(WAITV-CLKH)}$	Setup time, GPMC_WAIT[x] valid before GPMC_CLK high	4		ns
23	$t_{h(CLKH-WAITV)}$	Hold time, GPMC_WAIT[x] valid after GPMC_CLK high	3		ns

Table 8-35. Switching Characteristics Over Recommended Operating Conditions for GPMC/NOR Flash Interface - Synchronous Mode

(see Figure 8-21, Figure 8-22, Figure 8-23 for Non-Multiplexed Modes)
(see Figure 8-24, Figure 8-25, Figure 8-26 for Multiplexed Modes)

NO.	PARAMETER			OPP100/120/166		UNIT
				MIN	MAX	
1	$t_{c(CLK)}$	Cycle time, output clock GPMC_CLK period		20(1)		ns
2	$t_{w(CLKH)}$	Pulse duration, output clock GPMC_CLK high		0.5P(2)		ns
	$t_{w(CLKL)}$	Pulse duration, output clock GPMC_CLK low		0.5P(2)		
3	$t_{d(CLKH-nCSV)}$	Delay time, GPMC_CLK rising edge to $\overline{\text{GPMC_CS[x]}}$ transition		F - 3(3)	F + 6(3)	ns
4	$t_{d(CLKH-nCSIV)}$	Delay time, GPMC_CLK rising edge to $\overline{\text{GPMC_CS[x]}}$ invalid		E - 3(4)	E + 6(4)	ns
5	$t_{d(ADDV-CLK)}$	Delay time, GPMC_A[27:0] address bus valid to GPMC_CLK first edge	MUX0 and Non-Multi Muxed pins	B - 6(5)	B + 6(5)	ns
			MUX1 for GPMC_A[15:0]	B - 10(5)	B + 6(5)	
			MUX1/2 for GPMC_A[27:20]	B - 10(5)	B + 6(5)	
			GPMC_AD[15:0]	B - 10(5)	B + 6(5)	
6	$t_{d(CLKH-ADDIV)}$	Delay time, GPMC_CLK rising edge to GPMC_A[27:0] GPMC address bus invalid	MUX0 and Non-Multi Muxed pins	-3		ns
			MUX1 for GPMC_A[15:0]	-6		
			MUX1/2 for GPMC_A[27:20]	-6		
			GPMC_AD[15:0]	-6		
7	$t_{d(nBEV-CLK)}$	Delay time, GPMC_$\overline{\text{BE0}}$_CLE, $\overline{\text{GPMC_BE1}}$ valid to GPMC_CLK first edge		B - 3(5)	B + 3(5)	ns

(1) Sync mode can operate at 50 MHz max.
(2) P = GPMC_CLK period.
(3) For nCS falling edge (CS activated):
- For GpmcFCLKDivider = 0:
  F = 0.5 * CSExtraDelay * GPMC_FCLK
- For GpmcFCLKDivider = 1:
  F = 0.5 * CSExtraDelay * GPMC_FCLK if (ClkActivationTime and CSOnTime are odd) or (ClkActivationTime and CSOnTime are even)
  F = (1 + 0.5 * CSExtraDelay) * GPMC_FCLK otherwise
- For GpmcFCLKDivider = 2:
  F = 0.5 * CSExtraDelay * GPMC_FCLK if ((CSOnTime – ClkActivationTime) is a multiple of 3)
  F = (1 + 0.5 * CSExtraDelay) * GPMC_FCLK if ((CSOnTime – ClkActivationTime – 1) is a multiple of 3)
  F = (2 + 0.5 * CSExtraDelay) * GPMC_FCLK if ((CSOnTime – ClkActivationTime – 2) is a multiple of 3)

(4) For single read: E = (CSRdOffTime – AccessTime) * (TimeParaGranularity + 1) * GPMC_FCLK
For burst read: E = (CSRdOffTime – AccessTime) * (TimeParaGranularity + 1) * GPMC_FCLK
For burst write: E = (CSWrOffTime – AccessTime) * (TimeParaGranularity + 1) * GPMC_FCLK
(5) B = ClkActivationTime * GPMC_FCLK

Copyright © 2011–2013, Texas Instruments Incorporated

Table 8-35. Switching Characteristics Over Recommended Operating Conditions for GPMC/NOR Flash Interface - Synchronous Mode (continued)

(see Figure 8-21, Figure 8-22, Figure 8-23 for Non-Multiplexed Modes)
(see Figure 8-24, Figure 8-25, Figure 8-26 for Multiplexed Modes)

NO.	PARAMETER		OPP100/120/166		UNIT
			MIN	MAX	
8	$t_{d(CLKH-nBEIV)}$	Delay time, GPMC_CLK rising edge to GPMC_$\overline{BE0}$_CLE, $\overline{GPMC_BE1}$ invalid	D - 3(6)	D + 3(6)	ns
9	$t_{d(CLKH-nADV)}$	Delay time, GPMC_CLK rising edge to GPMC_$\overline{ADV}$_ALE transition	G - 3(7)	G + 6(7)	ns
10	$t_{d(CLKH-nADVIV)}$	Delay time, GPMC_CLK rising edge to GPMC_$\overline{ADV}$_ALE invalid	D - 3(6)	D + 6(6)	ns
11	$t_{d(CLKH-nOE)}$	Delay time, GPMC_CLK rising edge to $\overline{GPMC_OE_RE}$ transition	H - 3(8)	H + 5(8)	ns

(6) For single read: D = (RdCycleTime – AccessTime) * (TimeParaGranularity + 1) * GPMC_FCLK
For burst read: D = (RdCycleTime – AccessTime) * (TimeParaGranularity + 1) * GPMC_FCLK
For burst write: D = (WrCycleTime – AccessTime) * (TimeParaGranularity + 1) * GPMC_FCLK

(7) For ADV falling edge (ADV activated):
- Case GpmcFCLKDivider = 0:
  G = 0.5 * ADVExtraDelay * GPMC_FCLK
- Case GpmcFCLKDivider = 1:
  G = 0.5 * ADVExtraDelay * GPMC_FCLK if (ClkActivationTime and ADVOnTime are odd) or (ClkActivationTime and ADVOnTime are even)
  G = (1 + 0.5 * ADVExtraDelay) * GPMC_FCLK otherwise
- Case GpmcFCLKDivider = 2:
  G = 0.5 * ADVExtraDelay * GPMC_FCLK if ((ADVOnTime – ClkActivationTime) is a multiple of 3)
  G = (1 + 0.5 * ADVExtraDelay) * GPMC_FCLK if ((ADVOnTime – ClkActivationTime – 1) is a multiple of 3)
  G = (2 + 0.5 * ADVExtraDelay) * GPMC_FCLK if ((ADVOnTime – ClkActivationTime – 2) is a multiple of 3)

For ADV rising edge (ADV deactivated) in Reading mode:
- Case GpmcFCLKDivider = 0:
  G = 0.5 * ADVExtraDelay * GPMC_FCLK
- Case GpmcFCLKDivider = 1:
  G = 0.5 * ADVExtraDelay * GPMC_FCLK if (ClkActivationTime and ADVRdOffTime are odd) or (ClkActivationTime and ADVRdOffTime are even)
  G = (1 + 0.5 * ADVExtraDelay) * GPMC_FCLK otherwise
- Case GpmcFCLKDivider = 2:
  G = 0.5 * ADVExtraDelay * GPMC_FCLK if ((ADVRdOffTime – ClkActivationTime) is a multiple of 3)
  G = (1 + 0.5 * ADVExtraDelay) * GPMC_FCLK if ((ADVRdOffTime – ClkActivationTime – 1) is a multiple of 3)
  G = (2 + 0.5 * ADVExtraDelay) * GPMC_FCLK if ((ADVRdOffTime – ClkActivationTime – 2) is a multiple of 3)

For ADV rising edge (ADV deactivated) in Writing mode:
- Case GpmcFCLKDivider = 0:
  G = 0.5 * ADVExtraDelay * GPMC_FCLK
- Case GpmcFCLKDivider = 1:
  G = 0.5 * ADVExtraDelay * GPMC_FCLK if (ClkActivationTime and ADVWrOffTime are odd) or (ClkActivationTime and ADVWrOffTime are even)
  G = (1 + 0.5 * ADVExtraDelay) * GPMC_FCLK otherwise
- Case GpmcFCLKDivider = 2:
  G = 0.5 * ADVExtraDelay * GPMC_FCLK if ((ADVWrOffTime – ClkActivationTime) is a multiple of 3)
  G = (1 + 0.5 * ADVExtraDelay) * GPMC_FCLK if ((ADVWrOffTime – ClkActivationTime – 1) is a multiple of 3)
  G = (2 + 0.5 * ADVExtraDelay) * GPMC_FCLK if ((ADVWrOffTime – ClkActivationTime – 2) is a multiple of 3)

(8) For OE falling edge (OE activated) / IO DIR rising edge (IN direction) :
- Case GpmcFCLKDivider = 0:
  H = 0.5 * OEExtraDelay * GPMC_FCLK
- Case GpmcFCLKDivider = 1:
  H = 0.5 * OEExtraDelay * GPMC_FCLK if (ClkActivationTime and OEOnTime are odd) or (ClkActivationTime and OEOnTime are even)
  H = (1 + 0.5 * OEExtraDelay) * GPMC_FCLK otherwise
- Case GpmcFCLKDivider = 2:
  H = 0.5 * OEExtraDelay * GPMC_FCLK if ((OEOnTime – ClkActivationTime) is a multiple of 3)
  H = (1 + 0.5 * OEExtraDelay) * GPMC_FCLK if ((OEOnTime – ClkActivationTime – 1) is a multiple of 3)
  H = (2 + 0.5 * OEExtraDelay) * GPMC_FCLK if ((OEOnTime – ClkActivationTime – 2) is a multiple of 3)

For OE rising edge (OE deactivated):
- Case GpmcFCLKDivider = 0:
  H = 0.5 * OEExtraDelay * GPMC_FCLK
- Case GpmcFCLKDivider = 1:
  H = 0.5 * OEExtraDelay * GPMC_FCLK if (ClkActivationTime and OEOffTime are odd) or (ClkActivationTime and OEOffTime are even)
  H = (1 + 0.5 * OEExtraDelay) * GPMC_FCLK otherwise
- Case GpmcFCLKDivider = 2:
  H = 0.5 * OEExtraDelay * GPMC_FCLK if ((OEOffTime – ClkActivationTime) is a multiple of 3)
  H = (1 + 0.5 * OEExtraDelay) * GPMC_FCLK if ((OEOffTime – ClkActivationTime – 1) is a multiple of 3)
  H = (2 + 0.5 * OEExtraDelay) * GPMC_FCLK if ((OEOffTime – ClkActivationTime – 2) is a multiple of 3)

Copyright © 2011–2013, Texas Instruments Incorporated

Table 8-35. Switching Characteristics Over Recommended Operating Conditions for GPMC/NOR Flash Interface - Synchronous Mode (continued)

(see Figure 8-21, Figure 8-22, Figure 8-23 for Non-Multiplexed Modes)
(see Figure 8-24, Figure 8-25, Figure 8-26 for Multiplexed Modes)

NO.	PARAMETER		OPP100/120/166		UNIT
			MIN	MAX	
12	$t_{d(CLKH-nOEIV)}$	Delay time, GPMC_CLK rising edge to $\overline{GPMC_OE_RE}$ invalid	E - 3 (4)	E + 5 (4)	ns
15	$t_{d(CLKH-nWE)}$	Delay time, GPMC_CLK rising edge to $\overline{GPMC_WE}$ transition	I - 3 (9)	I + 6 (9)	ns
16	$t_{d(CLKH-Data)}$	Delay time, GPMC_CLK rising edge to GPMC_D[15:0] data bus transition	J - 3 (10)	J + 3 (10)	ns
18	$t_{d(CLKH-nBE)}$	Delay time, GPMC_CLK rising edge to GPMC_$\overline{BE0}$_CLE, $\overline{GPMC_BE1}$ transition	J - 3 (10)	J + 3 (10)	ns
19	$t_{w(nCSV)}$	Pulse duration, $\overline{GPMC_CS[x]}$ low	A (11)		ns
20	$t_{w(nBEV)}$	Pulse duration, GPMC_$\overline{BE0}$_CLE, $\overline{GPMC_BE1}$ low	C (12)		ns
21	$t_{w(nADVV)}$	Pulse duration, GPMC_$\overline{ADV}$_ALE low	K (13)		ns

(9) For WE falling edge (WE activated):
- Case GpmcFCLKDivider = 0:
  I = 0.5 * WEExtraDelay * GPMC_FCLK
- Case GpmcFCLKDivider = 1:
  I = 0.5 * WEExtraDelay * GPMC_FCLK if (ClkActivationTime and WEOnTime are odd) or (ClkActivationTime and WEOnTime are even)
  I = (1 + 0.5 * WEExtraDelay) * GPMC_FCLK otherwise
- Case GpmcFCLKDivider = 2:
  I = 0.5 * WEExtraDelay * GPMC_FCLK if ((WEOnTime – ClkActivationTime) is a multiple of 3)
  I = (1 + 0.5 * WEExtraDelay) * GPMC_FCLK if ((WEOnTime – ClkActivationTime – 1) is a multiple of 3)
  I = (2 + 0.5 * WEExtraDelay) * GPMC_FCLK if ((WEOnTime – ClkActivationTime – 2) is a multiple of 3)

For WE rising edge (WE deactivated):
- Case GpmcFCLKDivider = 0:
  I = 0.5 * WEExtraDelay * GPMC_FCLK
- Case GpmcFCLKDivider = 1:
  I = 0.5 * WEExtraDelay * GPMC_FCLK if (ClkActivationTime and WEOffTime are odd) or (ClkActivationTime and WEOffTime are even)
  I = (1 + 0.5 * WEExtraDelay) * GPMC_FCLK otherwise
- Case GpmcFCLKDivider = 2:
  I = 0.5 * WEExtraDelay * GPMC_FCLK if ((WEOffTime – ClkActivationTime) is a multiple of 3)
  I = (1 + 0.5 * WEExtraDelay) * GPMC_FCLK if ((WEOffTime – ClkActivationTime – 1) is a multiple of 3)
  I = (2 + 0.5 * WEExtraDelay) * GPMC_FCLK if ((WEOffTime – ClkActivationTime – 2) is a multiple of 3)

(10) J = GPMC_FCLK period.

(11) For single read: A = (CSRdOffTime - CSOnTime) * (TimeParaGranularity + 1) * GPMC_FCLK period
For burst read: A = (CSRdOffTime - CSOnTime + (n - 1) * PageBurstAccessTime) * (TimeParaGranularity + 1) * GPMC_FCLK period [n = page burst access number]
For burst write: A = (CSWrOffTime - CSOnTime + (n - 1) * PageBurstAccessTime) * (TimeParaGranularity + 1) * GPMC_FCLK period [n = page burst access number]

(12) For single read: C = RdCycleTime * (TimeParaGranularity + 1) * GPMC_FCLK
For burst read: C = (RdCycleTime + (n – 1) * PageBurstAccessTime) * (TimeParaGranularity + 1) * GPMC_FCLK [n = page burst access number]
For Burst write: C = (WrCycleTime + (n – 1) * PageBurstAccessTime) * (TimeParaGranularity + 1) * GPMC_FCLK [n = page burst access number]

(13) For read: K = (ADVRdOffTime - ADVOnTime) * (TimeParaGranularity + 1) * GPMC_FCLK
For write: K = (ADVWrOffTime - ADVOnTime) * (TimeParaGranularity + 1) * GPMC_FCLK

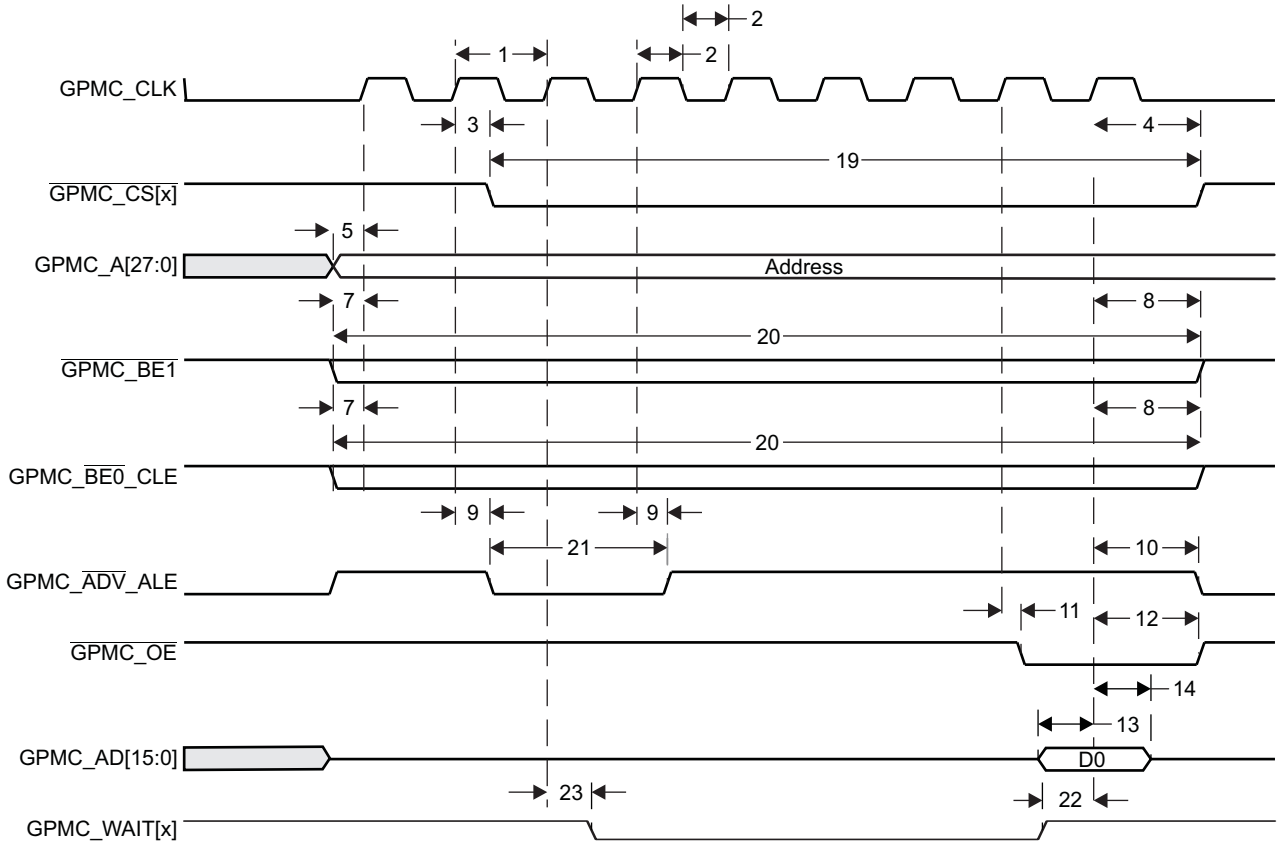

Figure 8-21. GPMC Non-Multiplexed NOR Flash - Synchronous Single Read (GPMCFCLKDIVIDER = 0)

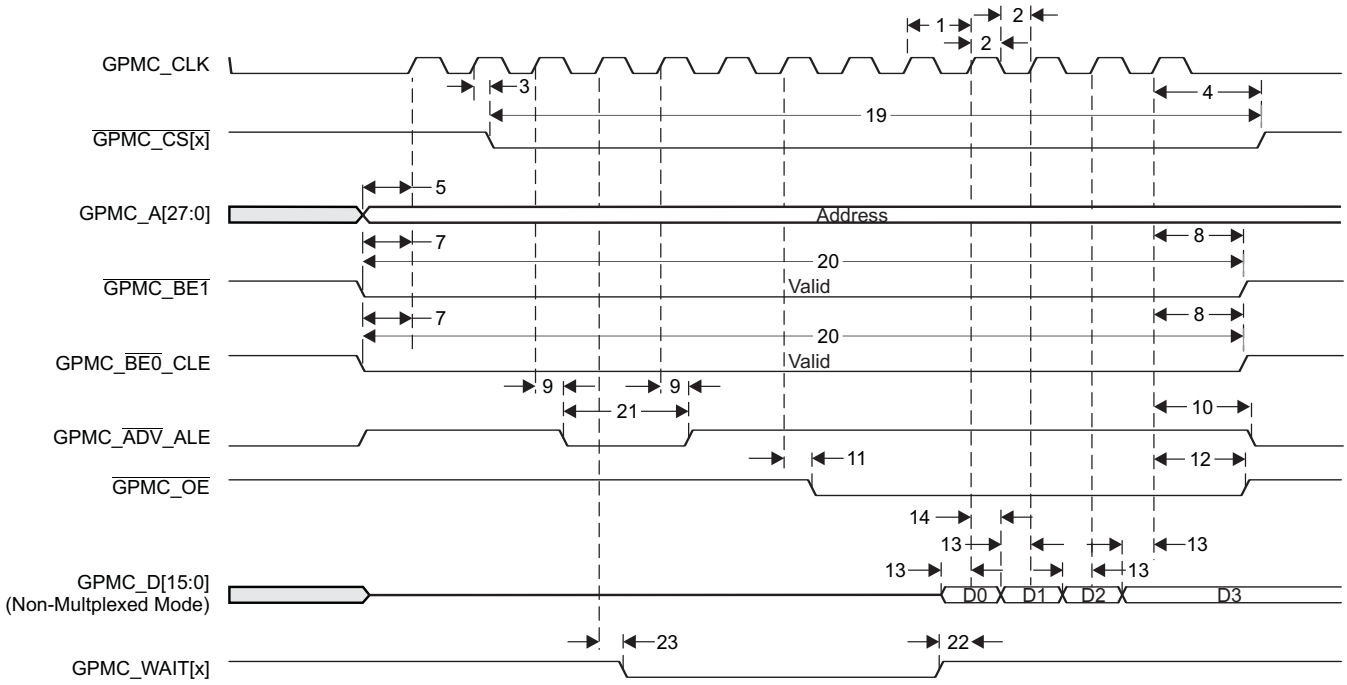

Figure 8-22. GPMC Non-Multiplexed NOR Flash - 14x16-bit Synchronous Burst Read (GPMCFCLKDIVIDER = 0)

Copyright © 2011–2013, Texas Instruments Incorporated

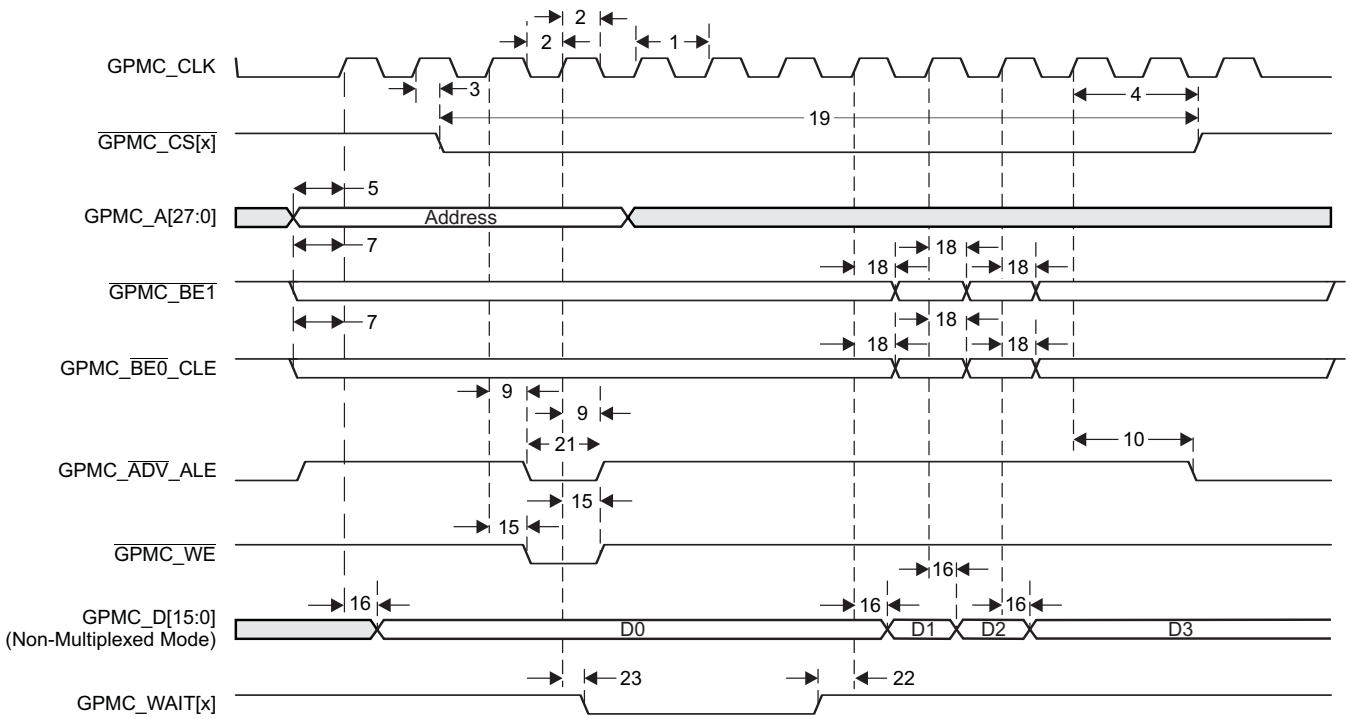

Figure 8-23. GPMC Non-Multiplexed NOR Flash - Synchronous Burst Write (GPMCFCLKDIVIDER = 0)

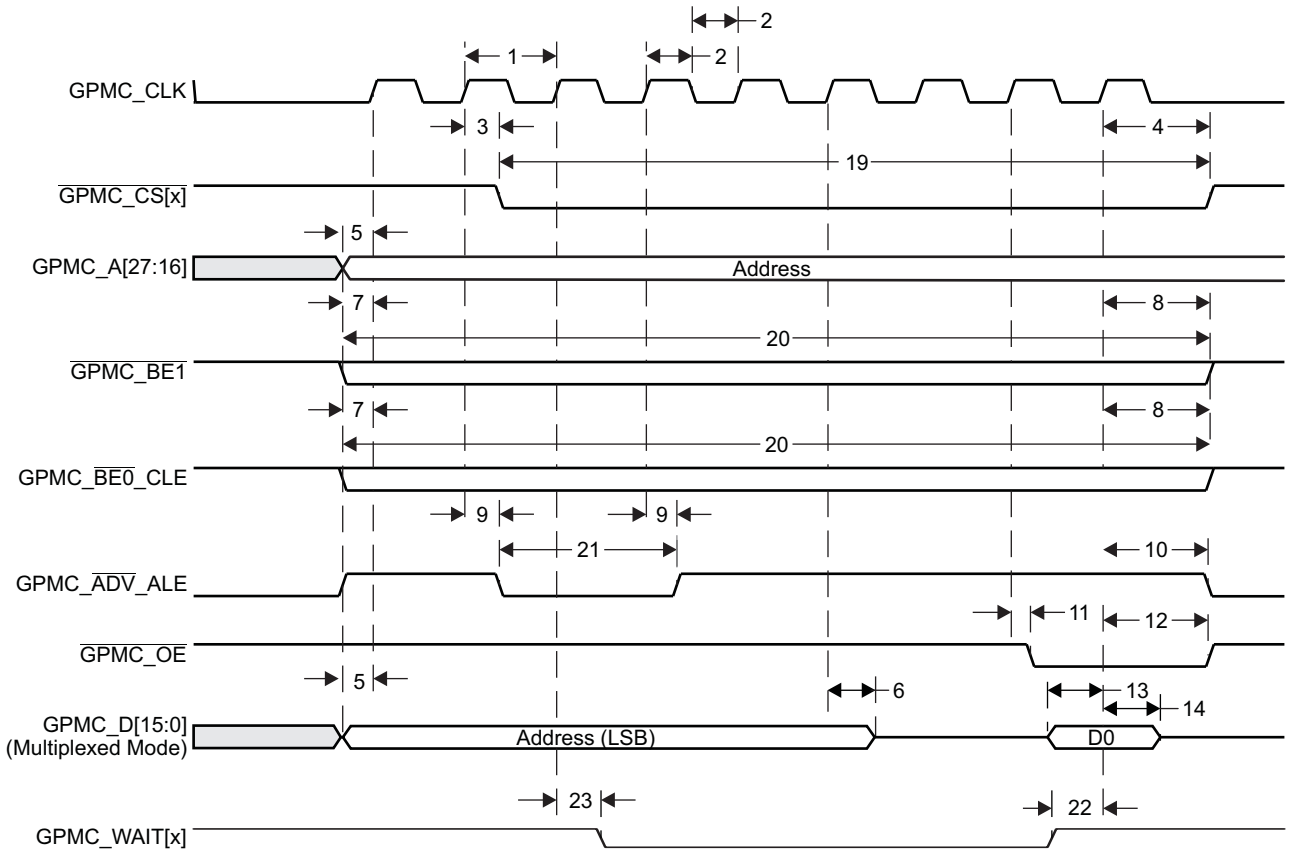

Figure 8-24. GPMC Multiplexed NOR Flash - Synchronous Single Read (GPMCFCLKDIVIDER = 0)

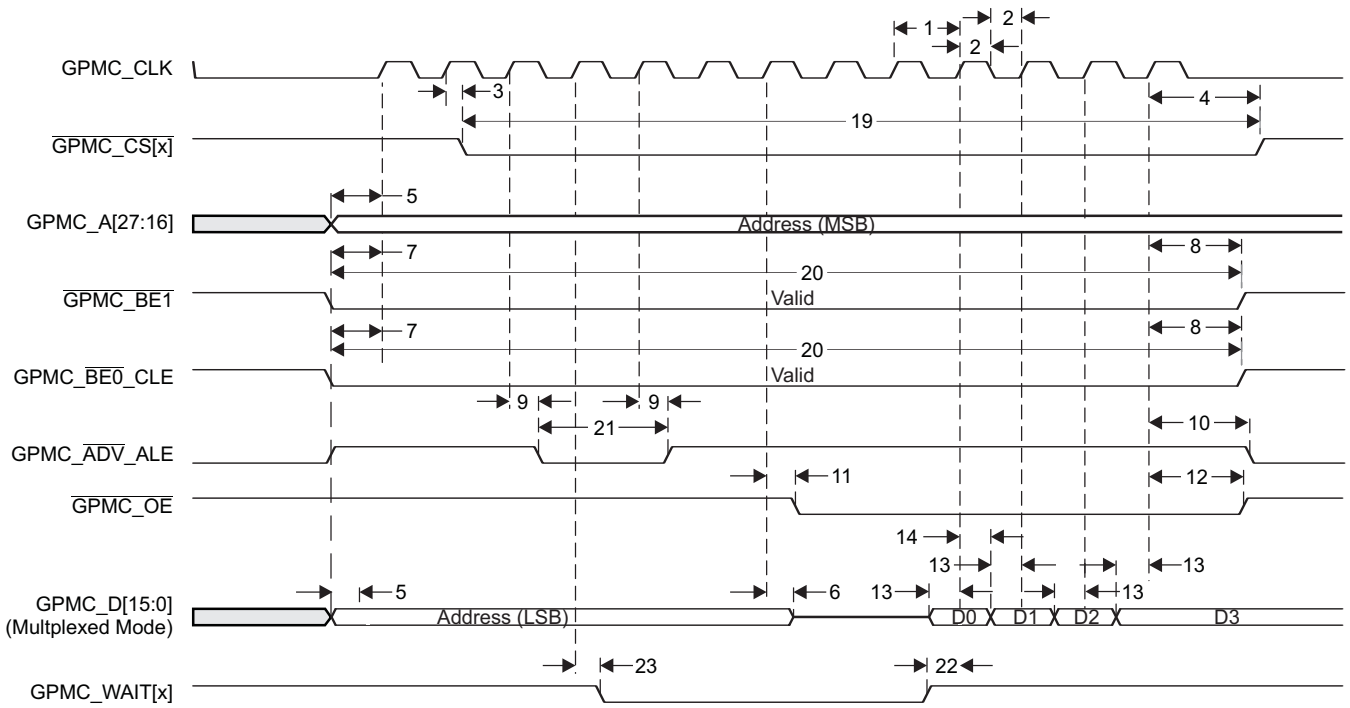

Figure 8-25. GPMC Multiplexed NOR Flash - 14x16-bit Synchronous Burst Read (GPMCFCLKDIVIDER = 0)

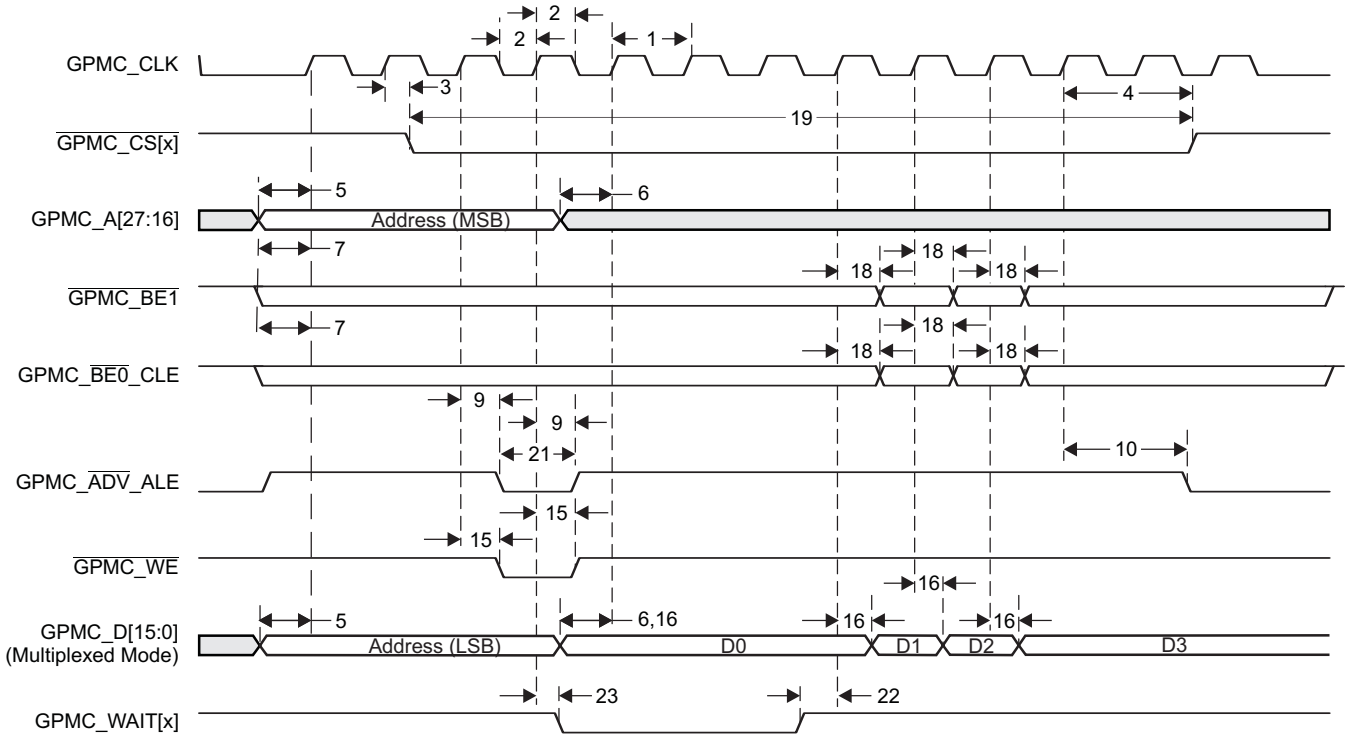

Figure 8-26. GPMC Non-Multiplexed NOR Flash - Synchronous Burst Write (GPMCFCLKDIVIDER = 0)

8.8.2.2 GPMC/NOR Flash Interface Asynchronous Mode Timing (Non-Multiplexed and Multiplexed Modes)

Copyright © 2011–2013, Texas Instruments Incorporated

Table 8-36. Timing Requirements for GPMC/NOR Flash Interface - Asynchronous Mode[1]

(see Figure 8-27, Figure 8-28 for Non-Multiplexed Mode)
(see Figure 8-29, Figure 8-31 for Multiplexed Mode)

NO.			OPP100/120/166		UNIT
			MIN	MAX	
6	$t_{acc(DAT)}$	Data maximum access time (GPMC_FCLK cycles)		H[2]	cycles
21	$t_{acc1\text{-}pgmode(DAT)}$	Page mode successive data maximum access time (GPMC_FCLK cycles)		P[3]	cycles
22	$t_{acc2\text{-}pgmode(DAT)}$	Page mode first data maximum access time (GPMC_FCLK cycles)		H[2]	cycles

(1) The internal GPMC_FCLK is equal to SYSCLK6, and is nominally 100 MHz or 10 ns. For any additional constraints, see the *Clocking* section of this document.
(2) H = AccessTime * (TimeParaGranularity + 1)
(3) P = PageBurstAccessTime * (TimeParaGranularity + 1).

Table 8-37. Switching Characteristics Over Recommended Operating Conditions for GPMC/NOR Flash Interface - Asynchronous Mode

(see Figure 8-27, Figure 8-28, Figure 8-29, Figure 8-30 for Non-Multiplexed Modes)
(see Figure 8-31, Figure 8-32 for Multiplexed Modes)

NO.	PARAMETER			OPP100/120/166		UNIT
				MIN	MAX	
1	$t_{w(nBEV)}$	Pulse duration, GPMC_$\overline{BE0}$_CLE, $\overline{GPMC_BE1}$ valid time			N[1]	ns
2	$t_{w(nCSV)}$	Pulse duration, $\overline{GPMC_CS[x]}$ low			A[2]	ns
4	$t_{d(nCSV\text{-}nADVIV)}$	Delay time, $\overline{GPMC_CS[x]}$ valid to GPMC_NADV_ALE invalid		B - 2[3]	B + 4[3]	ns
5	$t_{d(nCSV\text{-}nOEIV)}$	Delay time, $\overline{GPMC_CS[x]}$ valid to $\overline{GPMC_OE_RE}$ invalid (single read)		C - 2[4]	C + 4[4]	ns
10	$t_{d(AV\text{-}nCSV)}$	Delay time, GPMC_A[27:0] address bus valid to $\overline{GPMC_CS[x]}$ valid	MUX0 and Non-Multi Muxed pins	J - 2[5]	J + 4[5]	ns
			MUX1 for GPMC_A[15:0]	J - 2[5]	J + 4[5]	ns
			MUX1/2 for GPMC_A[27:20]	J - 2[5]	J + 4[5]	ns
11	$t_{d(nBEV\text{-}nCSV)}$	Delay time, GPMC_$\overline{BE0}$_CLE, $\overline{GPMC_BE1}$ valid to $\overline{GPMC_CS[x]}$ valid		J - 2[5]	J + 4[5]	ns
13	$t_{d(nCSV\text{-}nADVV)}$	Delay time, $\overline{GPMC_CS[x]}$ valid to GPMC_$\overline{ADV}$_ALE valid		K - 2[6]	K + 4[6]	ns
14	$t_{d(nCSV\text{-}nOEV)}$	Delay time, $\overline{GPMC_CS[x]}$ valid to $\overline{GPMC_OE_RE}$ valid		L - 2[7]	L + 4[7]	ns

(1) For single read: N = RdCycleTime * (TimeParaGranularity + 1) * GPMC_FCLK
For single write: N = WrCycleTime * (TimeParaGranularity + 1) * GPMC_FCLK
For burst read: N = (RdCycleTime + (n - 1) * PageBurstAccessTime) * (TimeParaGranularity + 1) * GPMC_FCLK
For burst write: N = (WrCycleTime + (n - 1) * PageBurstAccessTime) * (TimeParaGranularity + 1) * GPMC_FCLK
(2) For single read: A = (CSRdOffTime - CSOnTime) * (TimeParaGranularity + 1) * GPMC_FCLK
For single write: A = (CSWrOffTime - CSOnTime) * (TimeParaGranularity + 1) * GPMC_FCLK
For burst read: A = (CSRdOffTime - CSOnTime + (n - 1) * PageBurstAccessTime) * (TimeParaGranularity + 1) * GPMC_FCLK
For burst write: A = (CSWrOffTime - CSOnTime + (n - 1) * PageBurstAccessTime) * (TimeParaGranularity + 1) * GPMC_FCLK
(3) = B - nCS Max Delay + nADV Min Delay
For reading: B = ((ADVRdOffTime - CSOnTime) * (TimeParaGranularity + 1) + 0.5 * (ADVExtraDelay - CSExtraDelay)) * GPMC_FCLK
For writing: B = ((ADVWrOffTime - CSOnTime) * (TimeParaGranularity + 1) + 0.5 * (ADVExtraDelay - CSExtraDelay)) * GPMC_FCLK
(4) = C - nCS Max Delay + nOE Min Delay
C = ((OEOffTime - CSOnTime) * (TimeParaGranularity + 1) + 0.5 * (OEExtraDelay - CSExtraDelay)) * GPMC_FCLK
(5) = J - Address Max Delay + nCS Min Delay
J = (CSOnTime * (TimeParaGranularity + 1) + 0.5 * CSExtraDelay) * GPMC_FCLK
(6) = K - nCS Max Delay + nADV Min Delay
K = ((ADVOnTime - CSOnTime) * (TimeParaGranularity + 1) + 0.5 * (ADVExtraDelay - CSExtraDelay)) * GPMC_FCLK
(7) = L - nCS Max Delay + nOE Min Delay
L = ((OEOnTime - CSOnTime) * (TimeParaGranularity + 1) + 0.5 * (OEExtraDelay - CSExtraDelay)) * GPMC_FCLK

Copyright © 2011–2013, Texas Instruments Incorporated

Table 8-37. Switching Characteristics Over Recommended Operating Conditions for GPMC/NOR Flash Interface - Asynchronous Mode (continued)

(see Figure 8-27, Figure 8-28, Figure 8-29, Figure 8-30 for Non-Multiplexed Modes)
(see Figure 8-31, Figure 8-32 for Multiplexed Modes)

NO.	PARAMETER			OPP100/120/166 MIN	OPP100/120/166 MAX	UNIT
17	$t_{w(AIV)}$	Pulse duration, GPMC_A[27:0] address bus invalid between 2 successive R/W accesses	MUX0 and Non-Multi Muxed pins	G[8]		ns
			MUX1 for GPMC_A[15:0]	G[8]		ns
			MUX1/2 for GPMC_A[27:20]	G[8]		ns
			GPMC_D[15:0]	G[8]		ns
19	$t_{d(nCSV-nOEIV)}$	Delay time, $\overline{GPMC_CS[x]}$ valid to $\overline{GPMC_OE_RE}$ invalid (burst read)		I - 2[9]	I + 4[9]	ns
21	$t_{w(AV)}$	Pulse duration, GPMC_A[27:0] address bus valid: second, third and fourth accesses	MUX0 and Non-Multi Muxed pins	D[10]		ns
			MUX1 for GPMC_A[15:0]	D[10]		ns
			MUX1/2 for GPMC_A[27:20]	D[10]		ns
			GPMC_D[15:0]	D[10]		ns
26	$t_{d(nCSV-nWEV)}$	Delay time, $\overline{GPMC_CS[x]}$ valid to $\overline{GPMC_WE}$ valid		E - 2[11]	E + 4[11]	ns
28	$t_{d(nCSV-nWEIV)}$	Delay time, $\overline{GPMC_CS[x]}$ valid to $\overline{GPMC_WE}$ invalid		F - 2[12]	F + 4[12]	ns
29	$t_{d(nWEV-DV)}$	Delay time, $\overline{GPMC_WE}$ valid to GPMC_D[15:0] data bus valid			2.0	ns
30	$t_{d(DV-nCSV)}$	Delay time, GPMC_D[15:0] data bus valid to $\overline{GPMC_CS[x]}$ valid		J - 2[5]	J + 4[5]	ns
37	$t_{d(ADVV-AIV)}$	Delay time, GPMC_$\overline{ADV}$_ALE valid to GPMC_D[15:0] address invalid	MUX0 and Non-Multi Muxed pins		2.0	ns
38	$t_{d(nOEV-AIV)}$	Delay time, $\overline{GPMC_OE_RE}$ valid to GPMC_D[15:0] address/data busses phase end	MUX0 and Non-Multi Muxed pins		2.0	ns
			MUX1 for GPMC_A[15:0]		2.0	ns
			MUX1/2 for GPMC_A[27:20]		2.0	ns
			GPMC_D[15:0]		2.0	ns
39	$t_{d(AIV-ADVV)}$	Delay time, GPMC_D[15:0] address valid to GPMC_$\overline{ADV}$_ALE invalid	MUX0 and Non-Multi Muxed pins		2.0	ns

(8) G = Cycle2CycleDelay * GPMC_FCLK
(9) = I - nCS Max Delay + nOE Min Delay
I = ((OEOffTime + (n - 1) * PageBurstAccessTime - CSOnTime) * (TimeParaGranularity + 1) + 0.5 * (OEExtraDelay - CSExtraDelay)) * GPMC_FCLK
(10) D = PageBurstAccessTime * (TimeParaGranularity + 1) * GPMC_FCLK
(11) = E - nCS Max Delay + nWE Min Delay
E = ((WEOnTime - CSOnTime) * (TimeParaGranularity + 1) + 0.5 * (WEExtraDelay - CSExtraDelay)) * GPMC_FCLK
(12) = F - nCS Max Delay + nWE Min Delay
F = ((WEOffTime - CSOnTime) * (TimeParaGranularity + 1) + 0.5 * (WEExtraDelay - CSExtraDelay)) * GPMC_FCLK

Copyright © 2011–2013, Texas Instruments Incorporated

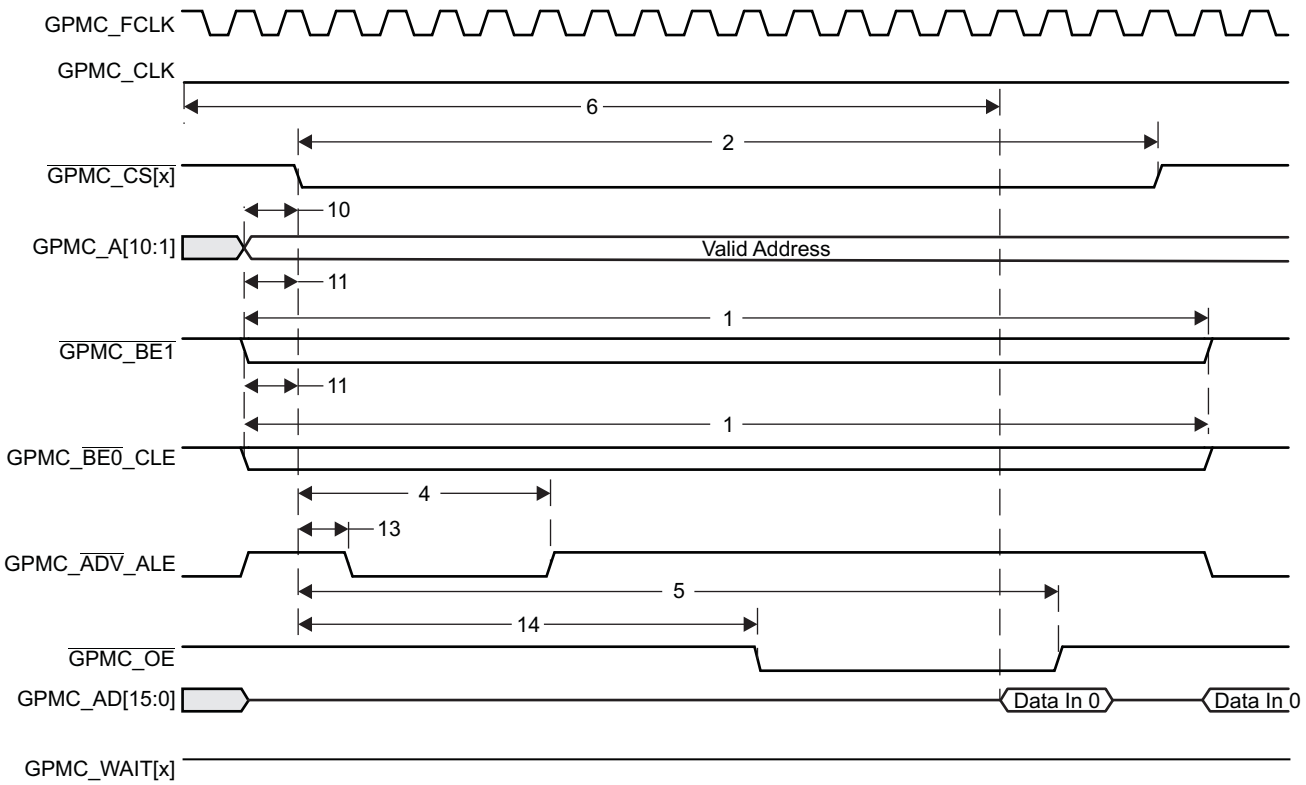

Figure 8-27. GPMC/Non-Multiplexed NOR Flash - Asynchronous Read - Single Word Timing

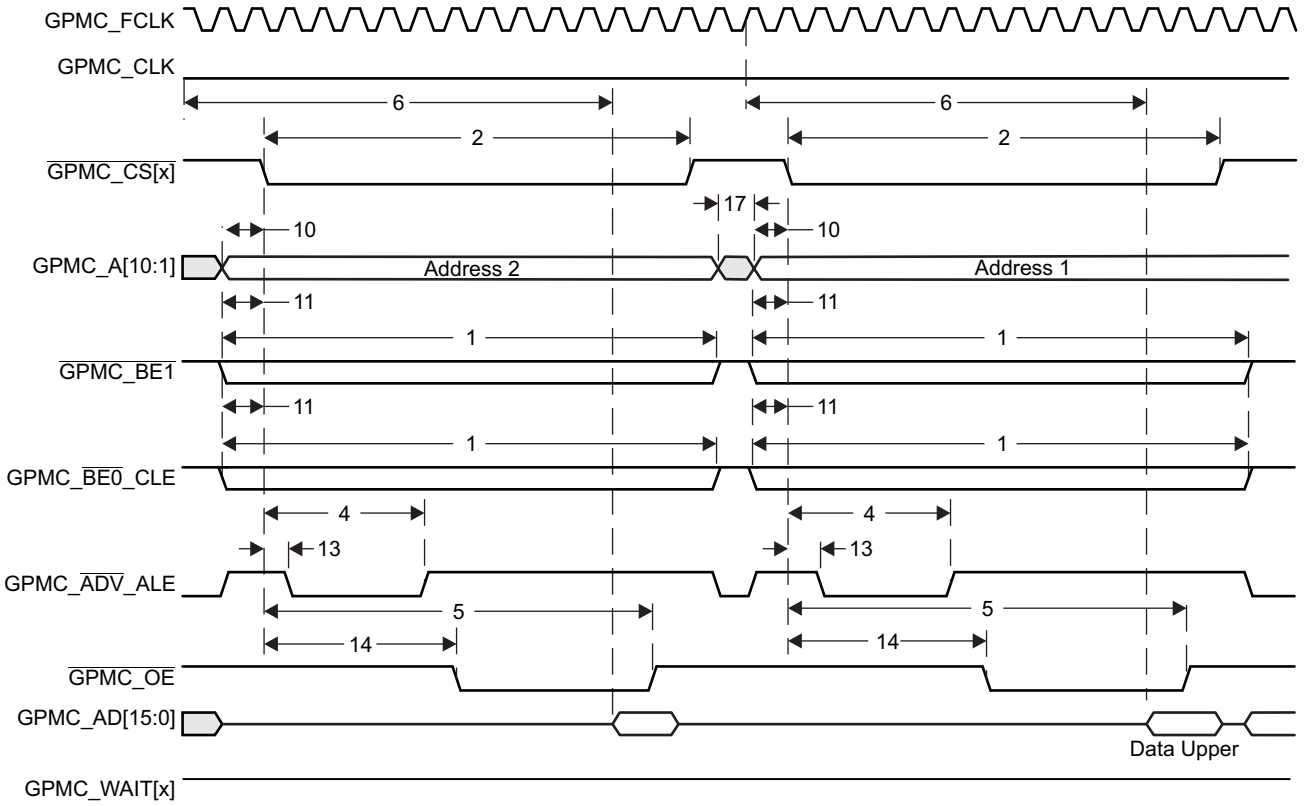

Figure 8-28. GPMC/Non-Multiplexed NOR Flash - Asynchronous Read - 32-Bit Access Timing

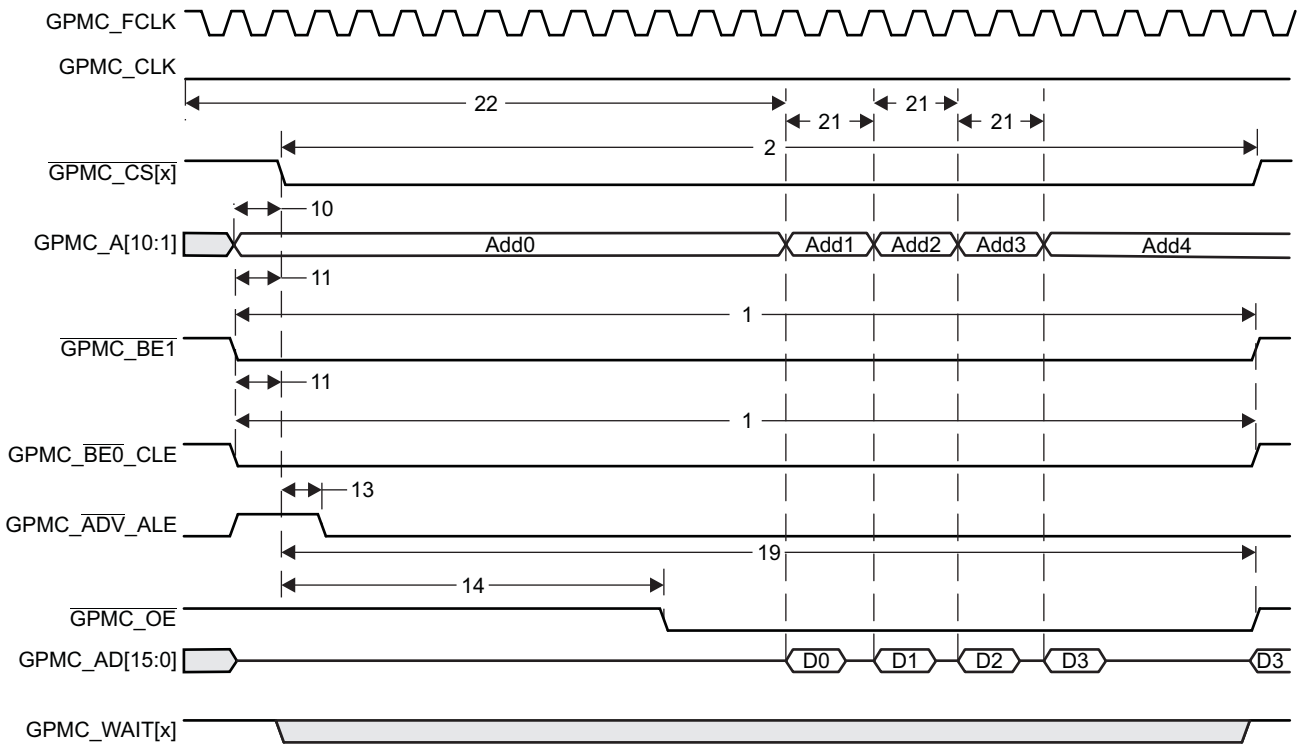

Figure 8-29. GPMC/Non-Multiplexed *Only* NOR Flash - Asynchronous Read - Page Mode 4x16-Bit Timing

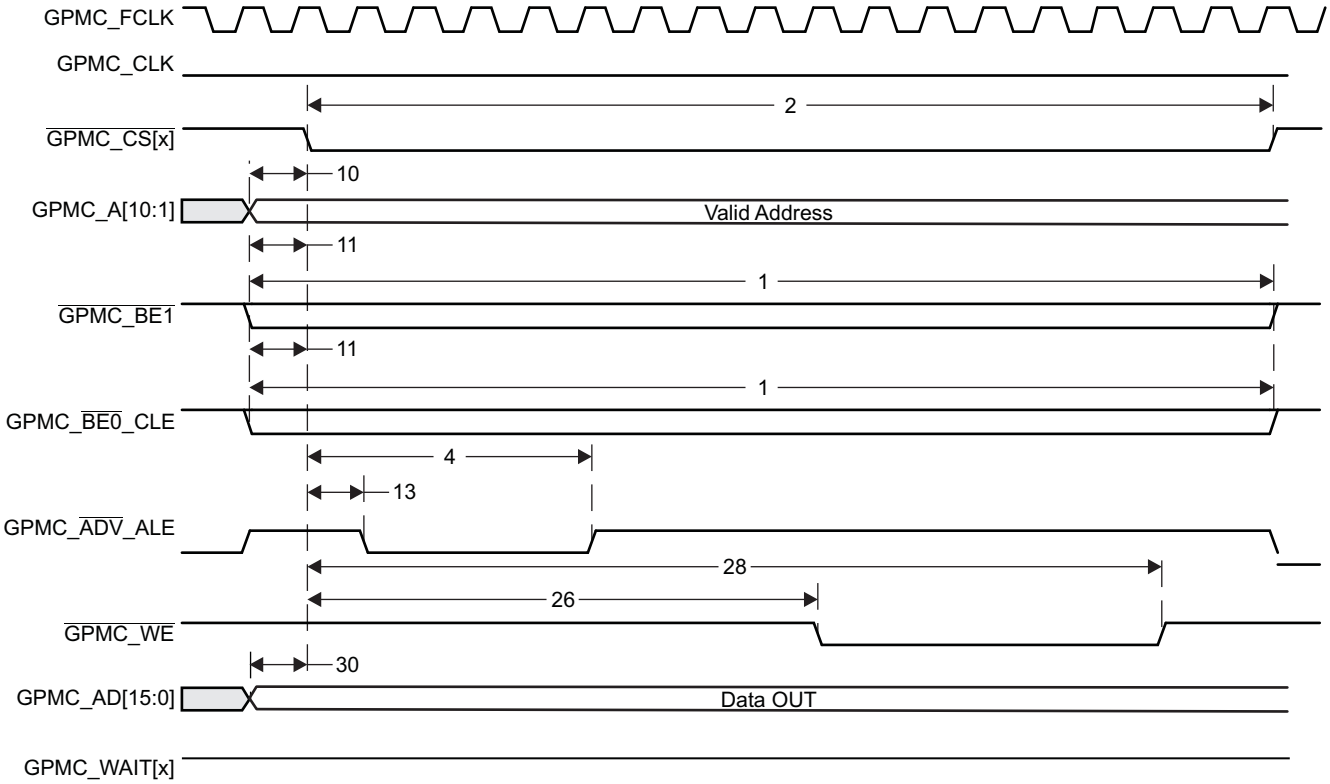

Figure 8-30. GPMC/Non-Multiplexed NOR Flash - Asynchronous Write - Single Word Timing

Copyright © 2011–2013, Texas Instruments Incorporated

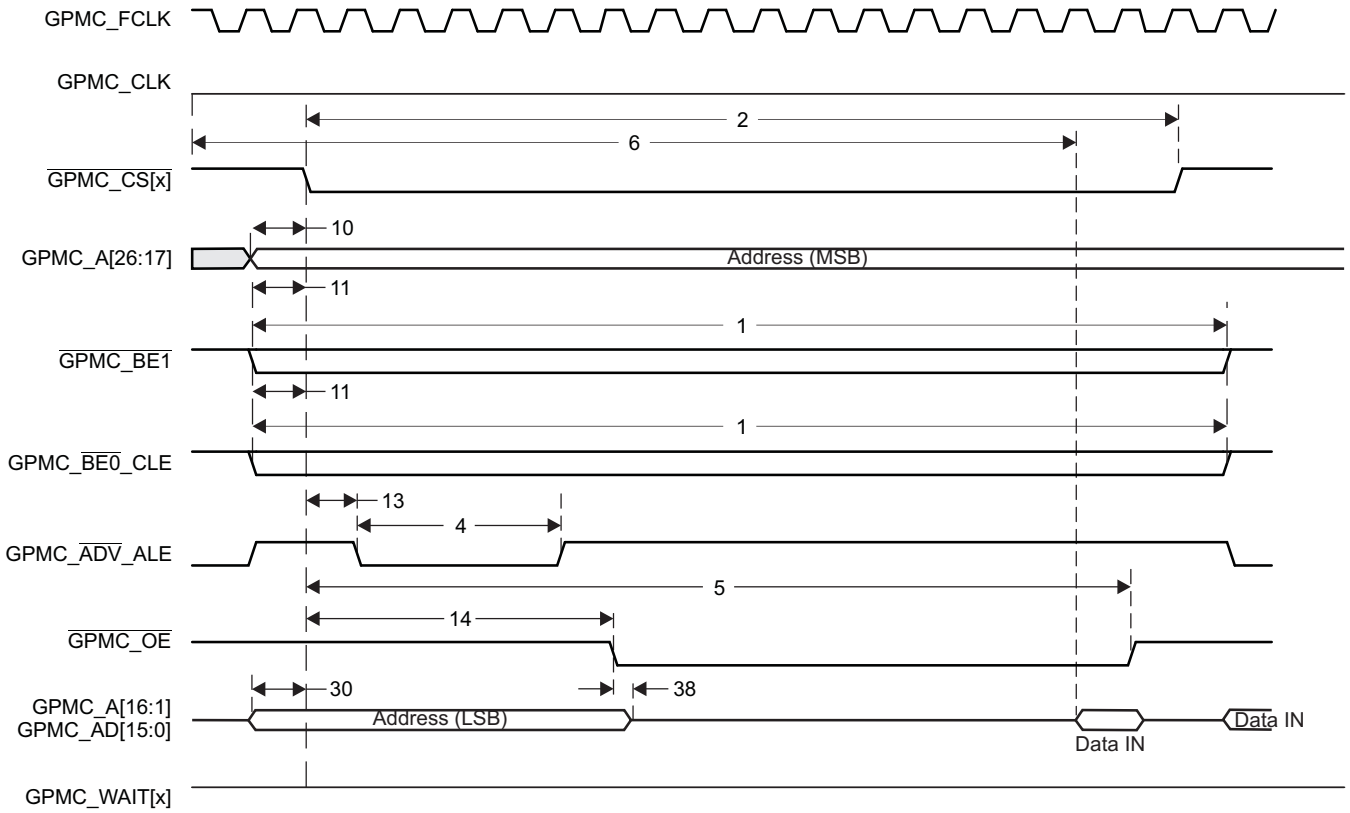

Figure 8-31. GPMC/Multiplexed NOR Flash - Asynchronous Read - Single Word Timing

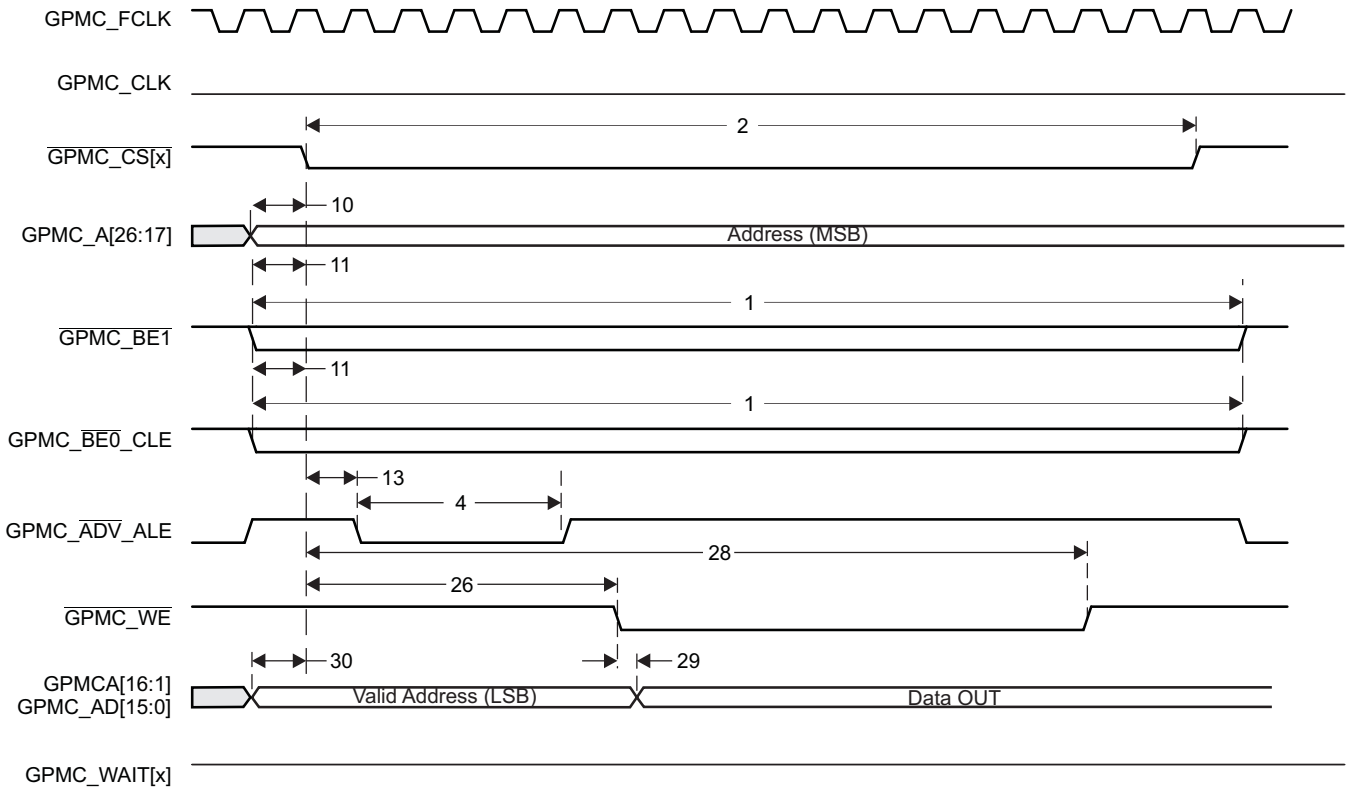

Figure 8-32. GPMC/Multiplexed NOR Flash - Asynchronous Write - Single Word Timing

8.8.2.3 GPMC/NAND Flash and ELM Interface Timing

Table 8-38. Timing Requirements for GPMC/NAND Flash Interface

(see Figure 8-35)

NO.			OPP100/120/166		UNIT
			MIN	MAX	
13	$t_{acc(DAT)}$	Data maximum access time (GPMC_FCLK cycles)		J(1)	cycles

(1) J = AccessTime * (TimeParaGranularity + 1)

Table 8-39. Switching Characteristics Over Recommended Operating Conditions for GPMC/NAND Flash Interface

(see Figure 8-33, Figure 8-34, Figure 8-35, Figure 8-36)

NO.	PARAMETER		OPP100/120/166		UNIT
			MIN	MAX	
1	$t_{w(nWEV)}$	Pulse duration, $\overline{GPMC_WE}$ valid time		A(1)	ns
2	$t_{d(nCSV-nWEV)}$	Delay time, $\overline{GPMC_CS[X]}$ valid to $\overline{GPMC_WE}$ valid	B - 2(2)	B + 4(2)	ns
3	$t_{d(CLEH-nWEV)}$	Delay time, GPMC_$\overline{BE0}$_CLE high to $\overline{GPMC_WE}$ valid	C - 2(3)	C + 4(3)	ns
4	$t_{d(nWEV-DV)}$	Delay time, GPMC_D[15:0] valid to $\overline{GPMC_WE}$ valid	D - 2(4)	D + 4(4)	ns
5	$t_{d(nWEIV-DIV)}$	Delay time, $\overline{GPMC_WE}$ invalid to GPMC_AD[15:0] invalid	E - 2(5)	E + 4(5)	ns
6	$t_{d(nWEIV-CLEIV)}$	Delay time, $\overline{GPMC_WE}$ invalid to GPMC_$\overline{BE0}$_CLE invalid	F - 2(6)	F + 4(6)	ns
7	$t_{d(nWEIV-nCSIV)}$	Delay time, $\overline{GPMC_WE}$ invalid to $\overline{GPMC_CS[X]}$ invalid	G - 2(7)	G + 4(7)	ns
8	$t_{d(ALEH-nWEV)}$	Delay time, GPMC_$\overline{ADV}$_ALE High to $\overline{GPMC_WE}$ valid	C - 2(3)	C + 4(3)	ns
9	$t_{d(nWEIV-ALEIV)}$	Delay time, $\overline{GPMC_WE}$ invalid to GPMC_$\overline{ADV}$_ALE invalid	F - 2(6)	F + 4(6)	ns
10	$t_{c(nWE)}$	Cycle time, write cycle time		H(8)	ns
11	$t_{d(nCSV-nOEV)}$	Delay time, $\overline{GPMC_CS[X]}$ valid to $\overline{GPMC_OE_RE}$ valid	I - 2(9)	I + 4(9)	ns
12	$t_{w(nOEV)}$	Pulse duration, $\overline{GPMC_OE_RE}$ valid time		K(10)	ns
13	$t_{c(nOE)}$	Cycle time, read cycle time		L(11)	ns
14	$t_{d(nOEIV-nCSIV)}$	Delay time, $\overline{GPMC_OE_RE}$ invalid to $\overline{GPMC_CS[X]}$ invalid	M - 2(12)	M + 4(12)	ns

(1) A = (WEOffTime - WEOnTime) * (TimeParaGranularity + 1) * GPMC_FCLK
(2) = B + nWE Min Delay - nCS Max Delay
B = ((WEOnTime - CSOnTime) * (TimeParaGranularity + 1) + 0.5 * (WEExtraDelay - CSExtraDelay)) * GPMC_FCLK
(3) = C + nWE Min Delay - CLE Max Delay
C = ((WEOnTime - ADVOnTime) * (TimeParaGranularity + 1) + 0.5 * (WEExtraDelay - ADVExtraDelay)) * GPMC_FCLK
(4) = D + nWE Min Delay - Data Max Delay
D = (WEOnTime * (TimeParaGranularity + 1) + 0.5 * WEExtraDelay) * GPMC_FCLK
(5) =E + Data Min Delay - nWE Max Delay
E = ((WrCycleTime - WEOffTime) * (TimeParaGranularity + 1) - 0.5 * WEExtraDelay) * GPMC_FCLK
(6) = F + CLE Min Delay - nWE Max Delay
F = ((ADVWrOffTime - WEOffTime) * (TimeParaGranularity + 1) + 0.5 * (ADVExtraDelay - WEExtraDelay)) * GPMC_FCLK
(7) =G + nCS Min Delay - nWE Max Delay
G = ((CSWrOffTime - WEOffTime) * (TimeParaGranularity + 1) + 0.5 * (CSExtraDelay - WEExtraDelay)) * GPMC_FCLK
(8) H = WrCycleTime * (1 + TimeParaGranularity) * GPMC_FCLK
(9) = I + nOE Min Delay - nCS Max Delay
I = ((OEOnTime - CSOnTime) * (TimeParaGranularity + 1) + 0.5 * (OEExtraDelay - CSExtraDelay)) * GPMC_FCLK
(10) K = (OEOffTime - OEOnTime) * (1 + TimeParaGranularity) * GPMC_FCLK
(11) L = RdCycleTime * (1 + TimeParaGranularity) * GPMC_FCLK
(12) =M + nCS Min Delay - nOE Max Delay
M = ((CSRdOffTime - OEOffTime) * (TimeParaGranularity + 1) + 0.5 * (CSExtraDelay - OEExtraDelay))* GPMC_FCLK

Copyright © 2011–2013, Texas Instruments Incorporated

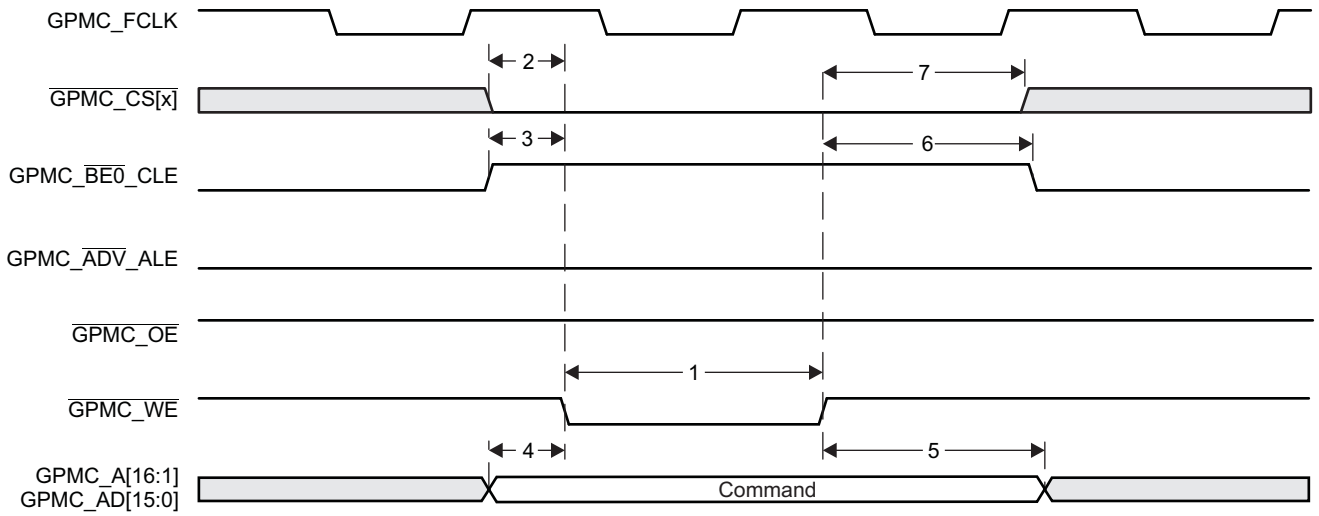

Figure 8-33. GPMC/NAND Flash - Command Latch Cycle Timing

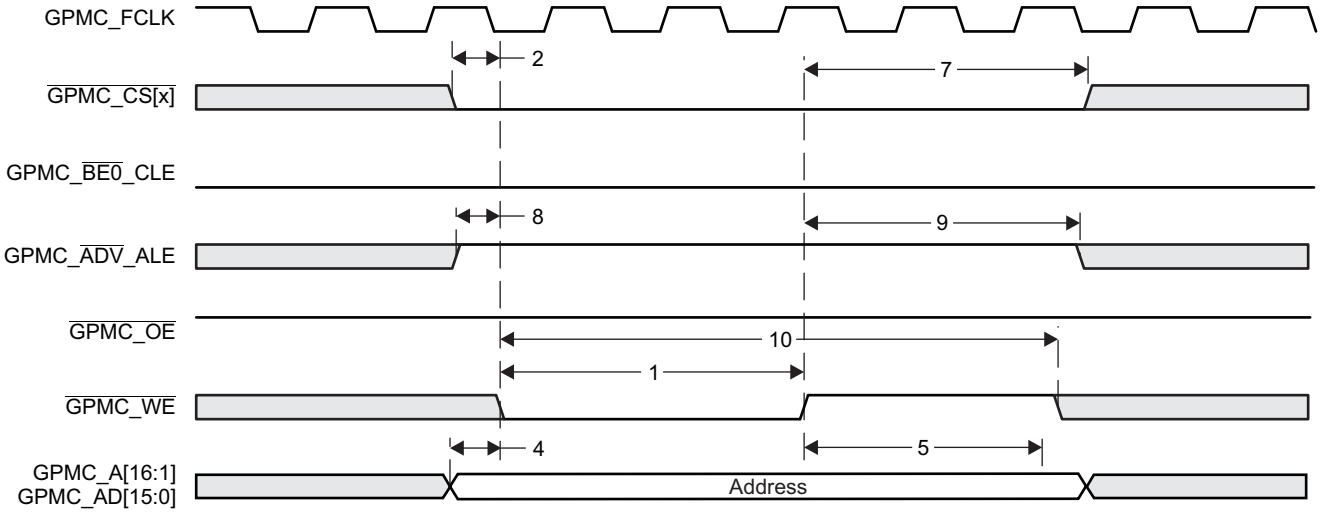

Figure 8-34. GPMC/NAND Flash - Address Latch Cycle Timing

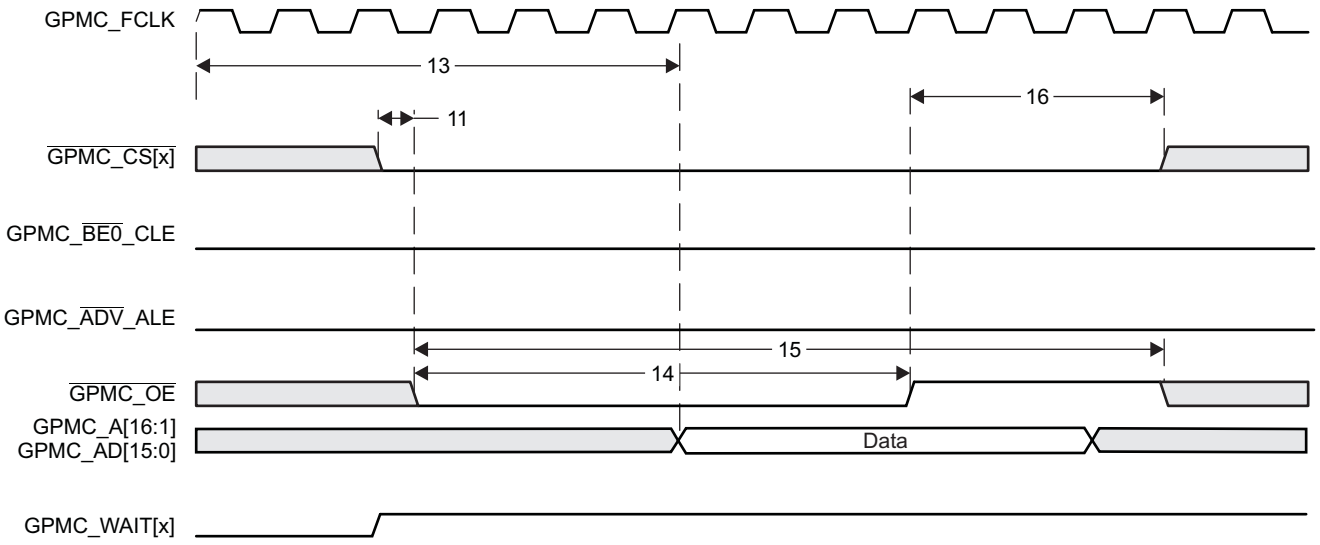

Figure 8-35. GPMC/NAND Flash - Data Read Cycle Timing

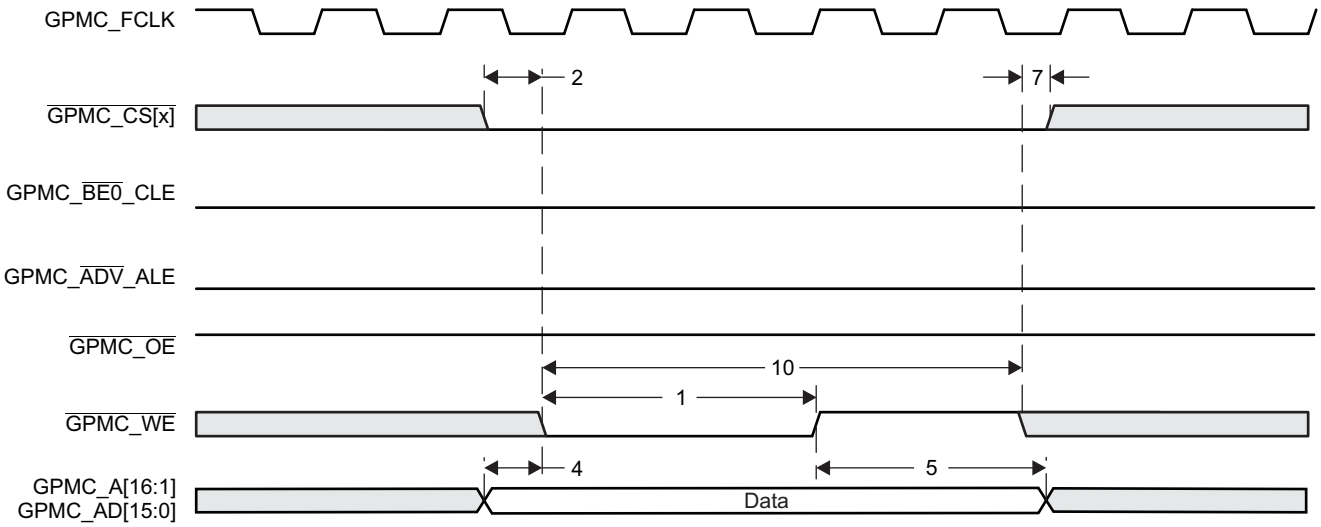

Figure 8-36. GPMC/NAND Flash - Data Write Cycle Timing

Copyright © 2011–2013, Texas Instruments Incorporated

8.9 High-Definition Multimedia Interface (HDMI)

The device includes an HDMI 1.3a-compliant transmitter for digital video and audio data to display devices. The HDMI interface consists of a digital HDMI transmitter core with TMDS encoder, a core wrapper with interface logic and control registers, and a transmit PHY, with the following features:

- Hot-plug detection
- Consumer electronics control (CEC) messages
- DVI 1.0 compliant (only RGB pixel format)
- CEA 861-D and VESA DMT formats
- Supports up to 165-MHz pixel clock
  - 1920 x 1080p @75 Hz with 8-bit/component color depth
  - 1600 x 1200 @60 Hz with 8-bit/component color depth
- Support for deep-color mode:
  - 10-bit/component color depth up to 1080p @60 Hz (Max pixel clock = 148.5 MHz)
  - 12-bit/component color depth up to 720p/1080i @60 Hz (Max pixel clock = 123.75 MHz)
- TMDS clock to the HDMI-PHY is up to 185.625 MHz
- Maximum supported pixel clock:
  - 165 MHz for 8-bit color depth
  - 148.5 MHz for 10-bit color depth
  - 123.75 MHz for 12-bit color depth
- Uncompressed multichannel (up to eight channels) audio (L-PCM) support
- Master I2C interface for display data channel (DDC) connection

For more details on the HDMI, see the *High-Definition Multimedia Interface (HDMI)* chapter of the *TMS320DM814x DaVinci Digital Media Processors Technical Reference Manual* (Literature Number: SPRUGZ8).

8.9.1 HDMI Design Guidelines

This section provides PCB design and layout guidelines for the HDMI interface. The design rules constrain PCB trace length, PCB trace skew, signal integrity, cross-talk, and signal timing. Simulation and system design work has been done to ensure the HDMI interface requirements are met.

8.9.1.1 HDMI Interface Schematic

The HDMI bus is separated into three main sections:

1. Transition Minimized Differential Signaling (TMDS) high-speed digital video interface
2. Display Data Channel (I2C bus for configuration and status exchange between two devices)
3. Consumer Electronics Control (optional) for remote control of connected devices.

The DDC and CEC are low-speed interfaces, so nothing special is required for PCB layout of these signals. Their connection is shown in Figure 8-37, *HDMI Interface High-Level Schematic*.

The TMDS channels are high-speed differential pairs and, therefore, require the most care in layout. Specifications for TMDS layout are below.

Figure 8-37 shows the HDMI interface schematic. The specific pin numbers can be obtained from Table 3-15, *HDMI Terminal Functions*.

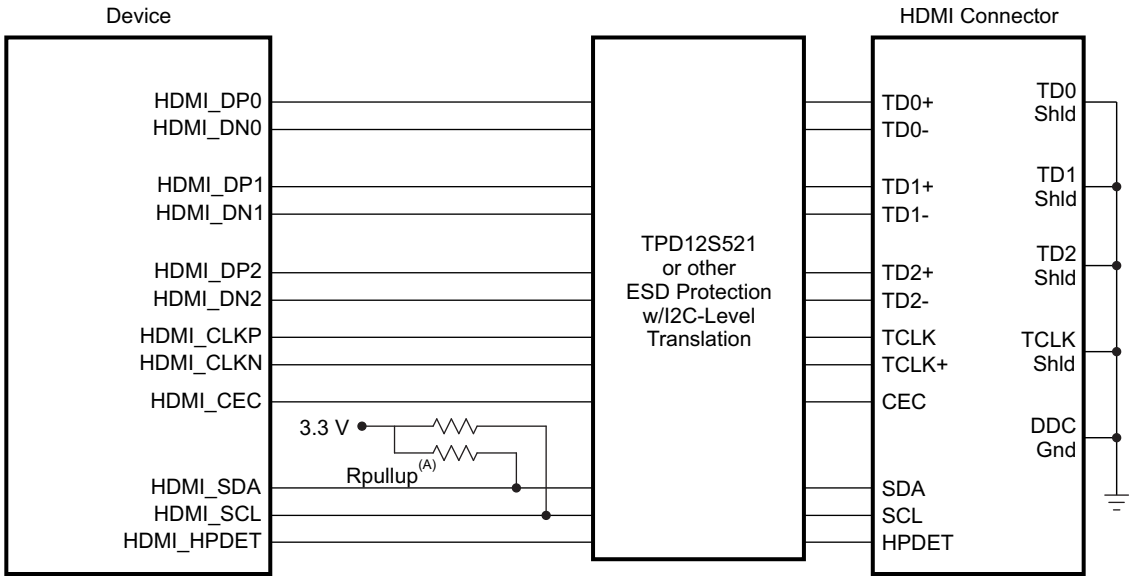

A. 5K-10K Ω pullup resistors are required if not integrated in the ESD protection chip.

Figure 8-37. HDMI Interface High-Level Schematic

8.9.1.2 TMDS Routing

The TMDS signals are high-speed differential pairs. Care must be taken in the PCB layout of these signals to ensure good signal integrity.

The TMDS differential signal traces must be routed to achieve 100 Ω (±10%) differential impedance and 60 Ω (±10%) single-ended impedance. Single-ended impedance control is required because differential signals are extremely difficult to closely couple on PCBs and, therefore, single-ended impedance becomes important.

These impedances are impacted by trace width, trace spacing, distance to reference planes, and dielectric material. Verify with a PCB design tool that the trace geometry for both data signal pairs results in as close to 60 Ω impedance traces as possible. For best accuracy, work with your PCB fabricator to ensure this impedance is met.

In general, closely coupled differential signal traces are not an advantage on PCBs. When differential signals are closely coupled, tight spacing and width control is necessary. Very small width and spacing variations affect impedance dramatically, so tight impedance control can be more problematic to maintain in production.

Loosely coupled PCB differential signals make impedance control much easier. Wider traces and spacing make obstacle avoidance easier, and trace width variations do not affect impedance as much; therefore, it is easier to maintain an accurate impedance over the length of the signal. The wider traces also show reduced skin effect and, therefore, often result in better signal integrity.

Table 8-40 shows the routing specifications for the TMDS signals.

Table 8-40. TMDS Routing Specifications

PARAMETER	MIN	TYP	MAX	UNIT
Processor-to-HDMI header trace length			7000	Mils
Number of stubs allowed on TMDS traces			0	Stubs
TX/RX pair differential impedance	90	100	110	Ω
TX/RX single ended impedance	54	60	66	Ω
Number of vias on each TMDS trace			2	Vias(1)

(1) Vias must be used in pairs with their distance minimized.

Copyright © 2011–2013, Texas Instruments Incorporated

Table 8-40. TMDS Routing Specifications (continued)

PARAMETER	MIN	TYP	MAX	UNIT
TMDS differential pair to any other trace spacing	2*DS (2)			

(2) DS = differential spacing of the HDMI traces.

8.9.1.3 DDC Signals

As shown in Figure 8-37, *HDMI Interface High-Level Schematic*, the DDC connects just like a standard I2C bus. As such, resistor pullups must be used to pull up the open drain buffer signals unless they are integrated into the ESD protection chip used. If used, these pullup resistors should be connected to a 3.3-V supply.

8.9.1.4 HDMI ESD Protection Device (Required)

Interfaces that connect to a cable such as HDMI generally require more ESD protection than can be built into the outputs of the processor. Therefore, this HDMI interface requires the use of an ESD protection chip to provide adequate ESD protection and to translate I2C voltage levels from the 3.3 V supplied by the device to the 5 volts required by the HDMI specification.

When selecting an ESD protection chip, choose the lowest capacitance ESD protection available to minimize signal degradation. In no case should the ESD protection circuit capacitance be more than 5 pF.

TI manufactures devices that provide ESD protection for HDMI signals such as the TPD12S521. For more information see the www.ti.com website.

8.9.1.5 PCB Stackup Specifications

Table 8-41 shows the stackup and feature sizes required for HDMI.

Table 8-41. HDMI PCB Stackup Specifications

PARAMETER	MIN	TYP	MAX	UNIT
PCB routing/plane layers	4	6	-	Layers
Signal routing layers	2	3	-	Layers
Number of ground plane cuts allowed within HDMI routing region	-	-	0	Cuts
Number of layers between HDMI routing region and reference ground plane	-	-	0	Layers
PCB trace width	-	4	-	Mils
PCB BGA escape via pad size	-	20	-	Mils
PCB BGA escape via hole size	-	10		Mils
Processor device BGA pad size (1) (2)		0.4		mm

(1) Non-solder mask defined pad.
(2) Per IPC-7351A BGA pad size guideline.

8.9.1.6 Grounding

Each TMDS channel has its own shield pin which should be grounded to provide a return current path for the TMDS signal.

8.10 High-Definition Video Processing Subsystem (HDVPSS)

The device High-Definition Video Processing Subsystem (HDVPSS) provides a video input interface for external imaging peripherals (that is, image sensors, video decoders, and so on) and a video output interface for display devices, such as analog SDTV displays, digital HDTV displays, digital LCD panels, and so on. The HDVPSS includes HD and SD video encoders and an HDMI transmitter interface.

The device HDVPSS features include:

- Two display processing pipelines with de-interlacing, scaling, alpha blending, chroma keying, color space conversion, flicker filtering, and pixel format conversion.
- HD/SD compositor features for PIP support.
- Format conversions (up to 1080p 60 Hz) include scan format conversion, scan rate conversion, aspect-ratio conversion, and frame size conversion.
- Supports additional video processing capabilities by using the memory-to-memory feature of the subsystem.
- Two parallel video processing pipelines support HD (up to 1080p60) and SD (NTSC/PAL) simultaneous outputs.
  - SD analog output with OSD with embedded timing codes (BT.656)
    - S-video or Composite output
    - 2-channel SD-DAC with 10-bit resolution
    - Options available to support MacroVision and CGMS-A (contact local TI Sales rep for information).
  - Digital HDMI 1.3a-compliant transmitter (for details, see Section 8.9, *High-Definition Multimedia Interface (HDMI)*).
  - One digital video output supporting up to 30-bits @ 165 MHz
  - One digital video output supporting up to 24-bits @ 165 MHz
- Two independently configurable external video input capture ports (up to 165 MHz).
  - 16/24-bit HD digital video input or dual clock independent 8-bit SD inputs on each capture port.
  - 8/16/24-bit digital video input
  - 8-bit digital video input
  - Embedded sync and external sync modes are supported for all input configurations (VIN1 Port B supports embedded sync only).
  - De-multiplexing of both pixel-to-pixel and line-to-line multiplexed streams, effectively supporting up to 16 simultaneous SD inputs with a glueless interface to an external multiplexer such as the TVP5158.
  - Additional features include: programmable color space conversion, scaler and chroma downsampler, ancillary VANC/VBI data capture (decoded by software).
- Graphics features:
  - Three independently-generated graphics layers.
  - Each supports full-screen resolution graphics in HD, SD or both.
  - Up/down scaler optimized for graphics.
  - Global and pixel-level alpha blending supported.

For more detailed information on specific features and registers, see the *High Definition Video Processing Subsystem* chapter of the *TMS320DM814x DaVinci Digital Media Processors Technical Reference Manual* (Literature Number: SPRUGZ8).

 Copyright © 2011–2013, Texas Instruments Incorporated

8.10.1 HDVPSS Electrical Data/Timing

Table 8-42. Timing Requirements for HDVPSS Input

(see Figure 8-38 and Figure 8-39)

NO.			OPP100/120/166 MIN	OPP100/120/166 MAX	UNIT
VIN[X]A_CLK					
1	$t_{c(CLK)}$	Cycle time, VIN[x]A_CLK	6.06 (1)		ns
2	$t_{w(CLKH)}$	Pulse duration, VIN[x]A_CLK high (45% of t_c)	2.73		ns
3	$t_{w(CLKH)}$	Pulse duration, VIN[x]A_CLK low (45% of t_c)	2.73		ns
4	$t_{su(DE-CLK)}$	Input setup time, control valid to VIN[x]A_CLK high/low	3		ns
	$t_{su(VSYNC-CLK)}$				
	$t_{su(FLD-CLK)}$				
	$t_{su(HSYNC-CLK)}$				
	$t_{su(D-CLK)}$	Input setup time, data valid to VIN[x]A_CLK high/low	3		
5	$t_{h(CLK-DE)}$	Input hold time, control valid from VIN[x]A_CLK high/low	0.1		ns
	$t_{h(CLK-VSYNC)}$				
	$t_{h(CLK-FLD)}$				
	$t_{h(CLK-HSYNC)}$				
	$t_{h(CLK-D)}$	Input hold time, data valid from VIN[x]A_CLK high/low	0.1		
VIN[x]B_CLK					
1	$t_{c(CLK)}$	Cycle time, VIN[x]B_CLK	6.06 (1)		ns
2	$t_{w(CLKH)}$	Pulse duration, VIN[x]B_CLK high (45% of t_c)	2.73		ns
3	$t_{w(CLKH)}$	Pulse duration, VIN[x]B_CLK low (45% of t_c)	2.73		ns
4	$t_{su(DE-CLK)}$	Input setup time, control valid to VIN[x]B_CLK high/low	3		ns
	$t_{su(VSYNC-CLK)}$				
	$t_{su(FLD-CLK)}$				
	$t_{su(HSYNC-CLK)}$				
	$t_{su(D-CLK)}$	Input setup time, data valid to VIN[x]B_CLK high/low	3		
5	$t_{h(CLK-DE)}$	Input hold time, control valid from VIN[x]B_CLK high/low	0.1		ns
	$t_{h(CLK-VSYNC)}$				
	$t_{h(CLK-FLD)}$				
	$t_{h(CLK-HSYNC)}$				
	$t_{h(CLK-D)}$	Input hold time, data valid from VIN[x]B_CLK high/low	0.1		

(1) For maximum frequency of 165 MHz.

Copyright © 2011–2013, Texas Instruments Incorporated

Table 8-43. Switching Characteristics Over Recommended Operating Conditions for HDVPSS Output

(see Figure 8-38 and Figure 8-40)

NO.	PARAMETER		OPP100/120/166		UNIT
			MIN	MAX	
1	$t_{c(CLK)}$	Cycle time, VOUT[x]_CLK	6.06 (1)		ns
2	$t_{w(CLKH)}$	Pulse duration, VOUT[x]_CLK high (45% of t_c)	2.73		ns
3	$t_{w(CLKL)}$	Pulse duration, VOUT[x]_CLK low (45% of t_c)	2.73		ns
7	$t_{t(CLK)}$	Transition time, VOUT[x]_CLK (10%-90%)		2.64	ns
6	$t_{d(CLK-AVID)}$	Delay time, VOUT[x]_CLK low (falling) to control valid	-1.2	2	ns
	$t_{d(CLK-FLD)}$				
	$t_{d(CLK-VSYNC)}$				
	$t_{d(CLK-HSYNC)}$				
	$t_{d(CLK-RCR)}$	Delay time, VOUT[0]_CLK low (falling) to data valid	-1.2	2	ns
	$t_{d(CLK-GYYC)}$				
	$t_{d(CLK-BCBC)}$				
	$t_{d(CLK-YYC)}$	Delay time, VOUT[1]_CLK low (falling) to data valid			
	$t_{d(CLK-C)}$				

(1) For maximum frequency of 165 MHz.

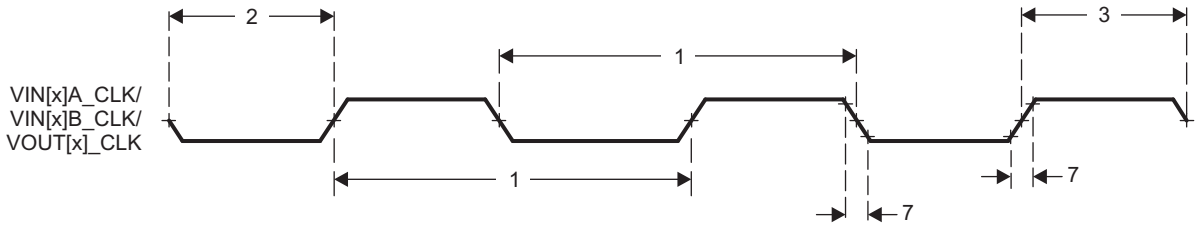

Figure 8-38. HDVPSS Clock Timing

Copyright © 2011–2013, Texas Instruments Incorporated

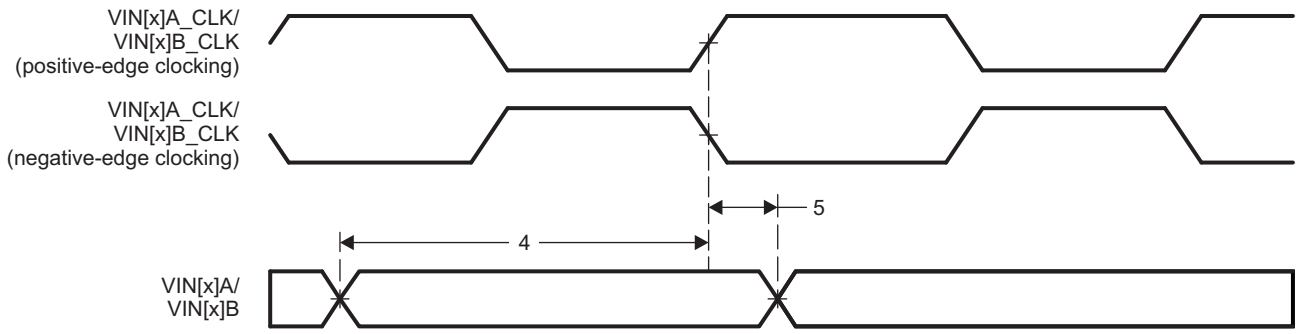

Figure 8-39. HDVPSS Input Timing

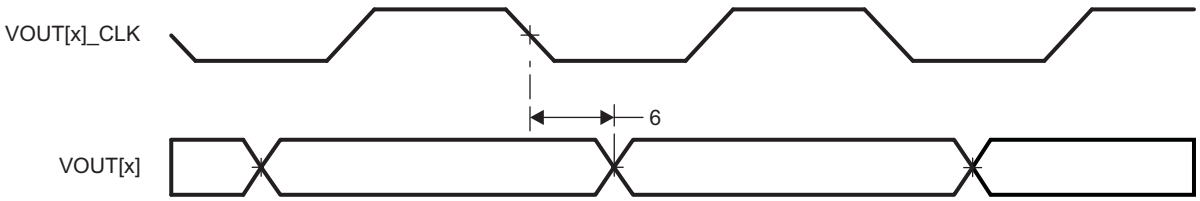

Figure 8-40. HDVPSS Output Timing

8.10.2 Video DAC Guidelines and Electrical Data/Timing

The analog video DAC outputs of the device can be operated in one of two modes: Normal mode and TVOUT Bypass mode. In Normal mode, the device's internal video amplifier is used. In TVOUT Bypass mode, the internal video amplifier is bypassed and an external amplifier is required.

Figure 8-41 shows a typical circuit that permits connecting the analog video output from the device to standard 75-Ω impedance video systems in Normal mode. Figure 8-42 shows a typical circuit that permits connecting the analog video output from the device to standard 75-Ω impedance video systems in TVOUT Bypass mode.

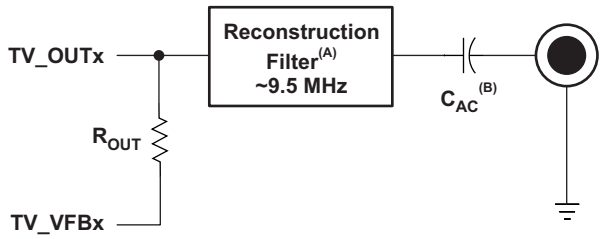

A. Reconstruction Filter (optional)
B. AC coupling capacitor (optional)

Figure 8-41. TV Output (Normal Mode)

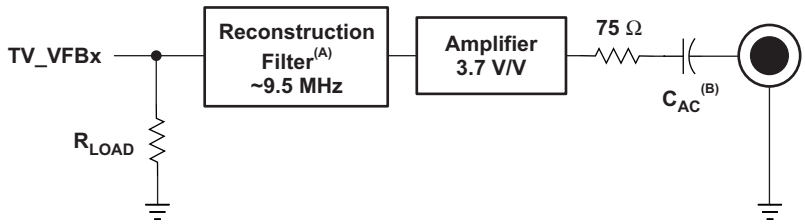

A. Reconstruction Filter (optional). Note: An amplifier with an integrated reconstruction filter can alternatively be used instead of a discrete reconstruction filter.
B. AC coupling capacitor (optional)

Figure 8-42. TV Output (TVOUT Bypass Mode)

During board design, the onboard traces and parasitics must be matched for the channel. The video DAC output pins (TV_OUTx/TV_VFBx) are very high-frequency analog signals and must be routed with extreme care. As a result, the paths of these signals must be as short as possible, and as isolated as possible from other interfering signals. In TVOUT Bypass mode, the load resistor and amplifier/buffer should be placed as close as possible to the TV_VFBx pins. Other layout guidelines include:

- Take special care to bypass the VDDA_VDAC_1P8 power supply pin with a capacitor. For more information, see Section 7.2.9, *Power-Supply Decoupling*.
- In **TVOUT Bypass mode**, place the R_{LOAD} resistor as close as possible to the Reconstruction Filter and Amplifier. In addition, place the 75-Ω resistor as close as possible (< 0.5 ") to the Amplifier/buffer output pin. To maintain a high-quality video signal, the onboard traces after the 75-Ω resistor should have a characteristic impedance of 75 Ω (± 20%).
- In **Normal mode**, TV_VFBx is the most sensitive pin in the TV out system. The R_{OUT} resistor should be placed as close as possible to the device pins. To maintain a high-quality video signal, the onboard traces leading to the TV_OUTx pin should have a characteristic impedance of 75 Ω (± 20%) starting from the closest possible place to the device pin output.
- Minimize input trace lengths to the device to reduce parasitic capacitance.
- Include solid ground return paths.
- Match trace lengths as close as possible within a video format group (that is, Y and C for S-Video output should match each other).

 Copyright © 2011–2013, Texas Instruments Incorporated

For additional Video DAC Design guidelines, see the *High Definition Video Processing Subsystem* chapter of the *TMS320DM814x DaVinci Digital Media Processors Technical Reference Manual* (Literature Number: SPRUGZ8).

Table 8-44. Static and Dynamic DAC Specifications

VDAC STATIC SPECIFICATIONS					
PARAMETER	**TEST CONDITIONS**	**MIN**	**TYP**	**MAX**	**UNIT**
Reference Current Setting Resistor (R_{SET})	Normal Mode	4653	4700	4747	Ω
	TVOUT Bypass Mode	9900	10000	10100	Ω
Output resistor between TV_OUTx and TV_VFBx pins (R_{OUT})	Normal Mode	2673	2700	2727	Ω
	TVOUT Bypass Mode	N/A			
Load Resistor (R_{LOAD})	Normal Mode	75-Ω Inside the Display			
	TVOUT Bypass Mode	1485	1500	1515	Ω
AC-Coupling Capacitor (Optional) [C_{AC}]	Normal Mode	220			uF
	TVOUT Bypass Mode	See External Amplifier Specification			
Total Capacitance from TV_OUTx to VSSA_VDAC_1P8	Normal Mode			300	pF
	TVOUT Bypass Mode	N/A			
Resolution			10		Bits
Integral Non-Linearity (INL), Best Fit	Normal Mode	-4		4	LSB
	TVOUT Bypass Mode	-1		1	LSB
Differential Non-Linearity (DNL)	Normal Mode	-2.5		2.5	LSB
	TVOUT Bypass Mode	-1		1	LSB
Full-Scale Output Voltage	Normal Mode (R_{LOAD} = 75 Ω)		1.3		V
	TVOUT Bypass Mode (R_{LOAD} = 1.5 kΩ)		0.7		V
Full-Scale Output Current	Normal Mode	N/A			
	TVOUT Bypass Mode		470		uA
Gain Error	Normal Mode (Composite) and TVOUT Bypass Mode	-10		10	%FS
	Normal Mode (S-Video)	-20		20	%FS
Gain Mismatch (Luma-to-Chroma)	Normal Mode (Composite)	N/A			
	Normal Mode (S-Video)	-10		10	%
Output Impedance	Looking into TV_OUTx nodes		75		Ω
VDAC DYNAMIC SPECIFICATIONS					
PARAMETER	**TEST CONDITIONS**	**MIN**	**TYP**	**MAX**	**UNIT**
Output Update Rate (F_{CLK})			54	60	MHz
Signal Bandwidth	3 dB		6		MHz
Spurious-Free Dynamic Range (SFDR) within bandwidth	F_{CLK} = 54 MHz, F_{OUT} = 1 MHz		50		dBc
Signal-to-Noise Ration (SNR)	F_{CLK} = 54 MHz, F_{OUT} = 1 MHz		54		dB
Power Supply Rejection (PSR)	Normal Mode, 100 mVpp @ 6 MHz on VDDA_VDAC_1P8		6		dB
	TVOUT Bypass Mode, 100 mVpp @ 6 MHz on VDDA_VDAC_1P8		20		

8.11 Inter-Integrated Circuit (I2C)

The device includes four inter-integrated circuit (I2C) modules which provide an interface to other devices compliant with Philips Semiconductors Inter-IC bus (I2C-bus™) specification version 2.1. External components attached to this 2-wire serial bus can transmit/receive 8-bit data to/from the device through the I2C module. The I2C port *does not* support CBUS compatible devices.

The I2C port supports the following features:

- Compatible with Philips I2C Specification Revision 2.1 (January 2000)
- Standard and fast modes from 10 - 400 Kbps (no fail-safe I/O buffers)
- Noise filter to remove noise 50 ns or less
- Seven- and ten-bit device addressing modes
- Multimaster transmitter/slave receiver mode
- Multimaster receiver/slave transmitter mode
- Combined master transmit/receive and receive/transmit modes
- Two DMA channels, one interrupt line
- Built-in FIFO (32 byte) for buffered read or write.

For more detailed information on the I2C peripheral, see the *Inter-Integrated Circuit (I2C) Controller Module* chapter of the *TMS320DM814x DaVinci Digital Media Processors Technical Reference Manual* (Literature Number: SPRUGZ8).

8.11.1 I2C Peripheral Register Descriptions

Table 8-45. I2C Registers

HEX ADDRESS					
I2C0	**I2C1**	**I2C2**	**I2C3**	**ACRONYM**	**REGISTER NAME**
0x4802 8000	0x4802 A000	0x4819 C000	0x4819 E000	I2C_REVNB_LO	Module Revision (LOW BYTES)
0x4802 8004	0x4802 A004	0x4819 C004	0x4819 E004	I2C_REVNB_HI	Module Revision (HIGH BYTES)
0x4802 8010	0x4802 A010	0x4819 C010	0x4819 E010	I2C_SYSC	System configuration
0x4802 8020	0x4802 A020	0x4819 C020	0x4819 E020	I2C_EOI	I2C End of Interrupt
0x4802 8024	0x4802 A024	0x4819 C024	0x4819 E024	I2C_IRQSTATUS_RAW	I2C Status Raw
0x4802 8028	0x4802 A028	0x4819 C028	0x4819 E028	I2C_IRQSTATUS	I2C Status
0x4802 802C	0x4802 A02C	0x4819 C02C	0x4819 E02C	I2C_IRQENABLE_SET	I2C Interrupt Enable Set
0x4802 8030	0x4802 A030	0x4819 C030	0x4819 E030	I2C_IRQENABLE_CLR	I2C Interrupt Enable Clear
0x4802 8034	0x4802 A034	0x4819 C034	0x4819 E034	I2C_WE	I2C Wakeup Enable
0x4802 8038	0x4802 A038	0x4819 C038	0x4819 E038	I2C_DMARXENABLE_SET	Receive DMA Enable Set
0x4802 803C	0x4802 A03C	0x4819 C03C	0x4819 E03C	I2C_DMATXENABLE_SET	Transmit DMA Enable Set
0x4802 8040	0x4802 A040	0x4819 C040	0x4819 E040	I2C_DMARXENABLE_CLR	Receive DMA Enable Clear
0x4802 8044	0x4802 A044	0x4819 C044	0x4819 E044	I2C_DMATXENABLE_CLR	Transmit DMA Enable Clear
0x4802 8048	0x4802 A048	0x4819 C048	0x4819 E048	I2C_DMARXWAKE_EN	Receive DMA Wakeup
0x4802 804C	0x4802 A04C	0x4819 C04C	0x4819 E04C	I2C_DMATXWAKE_EN	Transmit DMA Wakeup
0x4802 8090	0x4802 A090	0x4819 C090	0x4819 E090	I2C_SYSS	System Status
0x4802 8094	0x4802 A094	0x4819 C094	0x4819 E094	I2C_BUF	Buffer Configuration
0x4802 8098	0x4802 A098	0x4819 C098	0x4819 E098	I2C_CNT	Data Counter
0x4802 809C	0x4802 A09C	0x4819 C09C	0x4819 E09C	I2C_DATA	Data Access
0x4802 80A4	0x4802 A0A4	0x4819 C0A4	0x4819 E0A4	I2C_CON	I2C Configuration
0x4802 80A8	0x4802 A0A8	0x4819 C0A8	0x4819 E0A8	I2C_OA	I2C Own Address

Copyright © 2011–2013, Texas Instruments Incorporated

Table 8-45. I2C Registers (continued)

HEX ADDRESS					
I2C0	**I2C1**	**I2C2**	**I2C3**	**ACRONYM**	**REGISTER NAME**
0x4802 80AC	0x4802 A0AC	0x4819 C0AC	0x4819 E0AC	I2C_SA	I2C Slave Address
0x4802 80B0	0x4802 A0B0	0x4819 C0B0	0x4819 E0B0	I2C_PSC	I2C Clock Prescaler
0x4802 80B4	0x4802 A0B4	0x4819 C0B4	0x4819 E0B4	I2C_SCLL	I2C SCL Low Time
0x4802 80B8	0x4802 A0B8	0x4819 C0B8	0x4819 E0B8	I2C_SCLH	I2C SCL High Time
0x4802 80BC	0x4802 A0BC	0x4819 C0BC	0x4819 E0BC	I2C_SYSTEST	System Test
0x4802 80C0	0x4802 A0C0	0x4819 C0C0	0x4819 E0C0	I2C_BUFSTAT	I2C Buffer Status
0x4802 80C4	0x4802 A0C4	0x4819 C0C4	0x4819 E0C4	I2C_OA1	I2C Own Address 1
0x4802 80C8	0x4802 A0C8	0x4819 C0C8	0x4819 E0C8	I2C_OA2	I2C Own Address 2
0x4802 80CC	0x4802 A0CC	0x4819 C0CC	0x4819 E0CC	I2C_OA3	I2C Own Address 3
0x4802 80D0	0x4802 A0D0	0x4819 C0D0	0x4819 E0D0	I2C_ACTOA	Active Own Address
0x4802 80D4	0x4802 A0D4	0x4819 C0D4	0x4819 E0D4	I2C_SBLOCK	I2C Clock Blocking Enable

Copyright © 2011–2013, Texas Instruments Incorporated

8.11.2 I2C Electrical Data/Timing

Table 8-46. Timing Requirements for I2C Input Timings (1)

(see Figure 8-43)

NO.			OPP100/120/166				UNIT
			STANDARD MODE		FAST MODE		
			MIN	MAX	MIN	MAX	
1	$t_{c(SCL)}$	Cycle time, SCL	10		2.5		µs
2	$t_{su(SCLH-SDAL)}$	Setup time, SCL high before SDA low (for a repeated START condition)	4.7		0.6		µs
3	$t_{h(SDAL-SCLL)}$	Hold time, SCL low after SDA low (for a START and a repeated START condition)	4		0.6		µs
4	$t_{w(SCLL)}$	Pulse duration, SCL low	4.7		1.3		µs
5	$t_{w(SCLH)}$	Pulse duration, SCL high	4		0.6		µs
6	$t_{su(SDAV-SCLH)}$	Setup time, SDA valid before SCL high	250		100 (2)		ns
7	$t_{h(SCLL-SDAV)}$	Hold time, SDA valid after SCL low	0 (3)	3.45 (4)	0 (3)	0.9 (4)	µs
8	$t_{w(SDAH)}$	Pulse duration, SDA high between STOP and START conditions	4.7		1.3		µs
9	$t_{r(SDA)}$	Rise time, SDA		1000	$20 + 0.1C_b$ (5)	300	ns
10	$t_{r(SCL)}$	Rise time, SCL		1000	$20 + 0.1C_b$ (5)	300	ns
11	$t_{f(SDA)}$	Fall time, SDA		300	$20 + 0.1C_b$ (5)	300	ns
12	$t_{f(SCL)}$	Fall time, SCL		300	$20 + 0.1C_b$ (5)	300	ns
13	$t_{su(SCLH-SDAH)}$	Setup time, SCL high before SDA high (for STOP condition)	4		0.6		µs
14	$t_{w(SP)}$	Pulse duration, spike (must be suppressed)			0	50	ns
15	C_b (5)	Capacitive load for each bus line		400		400	pF

(1) The I2C pins SDA and SCL do not feature fail-safe I/O buffers. These pins could potentially draw current when the device is powered down.
(2) A Fast-mode I^2C-bus™ device can be used in a Standard-mode I^2C-bus system, but the requirement $t_{su(SDA-SCLH)} \geq 250$ ns must then be met. This will automatically be the case if the device does not stretch the LOW period of the SCL signal. If such a device does stretch the LOW period of the SCL signal, it must output the next data bit to the SDA line t_r max + $t_{su(SDA-SCLH)}$= 1000 + 250 = 1250 ns (according to the Standard-mode I^2C-Bus Specification) before the SCL line is released.
(3) A device must internally provide a hold time of at least 300 ns for the SDA signal (referred to the V_{IHmin} of the SCL signal) to bridge the undefined region of the falling edge of SCL.
(4) The maximum $t_{h(SDA-SCLL)}$ has only to be met if the device does not stretch the low period [$t_{w(SCLL)}$] of the SCL signal.
(5) C_b = total capacitance of one bus line in pF. If mixed with HS-mode devices, faster fall-times are allowed.

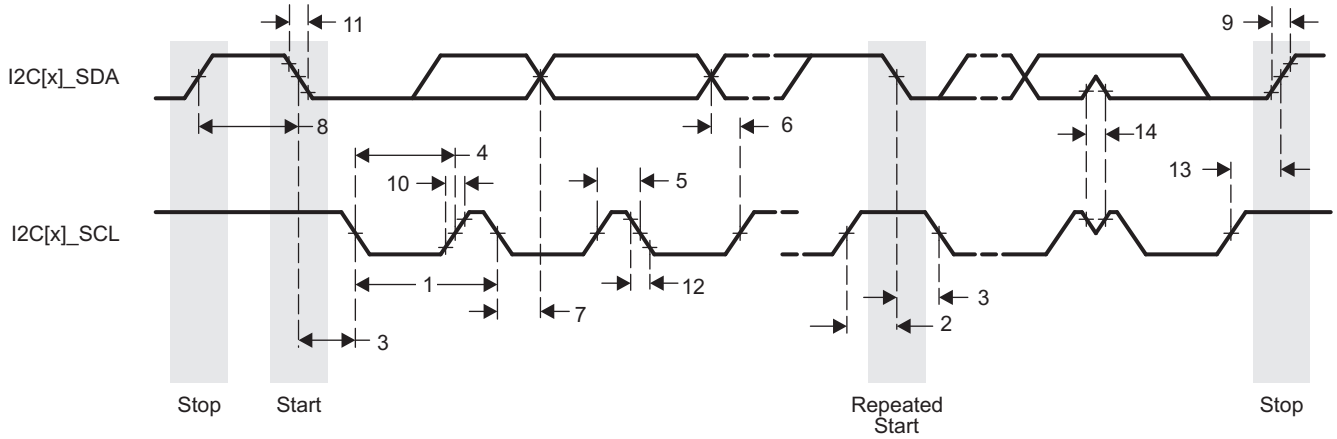

Figure 8-43. I2C Receive Timing

Copyright © 2011–2013, Texas Instruments Incorporated

Table 8-47. Switching Characteristics Over Recommended Operating Conditions for I2C Output Timings

(see Figure 8-44)

NO.	PARAMETER		OPP100/120/166				UNIT
			STANDARD MODE		FAST MODE		
			MIN	MAX	MIN	MAX	
16	$t_{c(SCL)}$	Cycle time, SCL	10		2.5		µs
17	$t_{su(SCLH-SDAL)}$	Setup time, SCL high before SDA low (for a repeated START condition)	4.7		0.6		µs
18	$t_{h(SDAL-SCLL)}$	Hold time, SCL low after SDA low (for a START and a repeated START condition)	4		0.6		µs
19	$t_{w(SCLL)}$	Pulse duration, SCL low	4.7		1.3		µs
20	$t_{w(SCLH)}$	Pulse duration, SCL high	4		0.6		µs
21	$t_{su(SDAV-SCLH)}$	Setup time, SDA valid before SCL high	250		100		ns
22	$t_{h(SCLL-SDAV)}$	Hold time, SDA valid after SCL low (for I2C bus devices)	0	3.45	0	0.9	µs
23	$t_{w(SDAH)}$	Pulse duration, SDA high between STOP and START conditions	4.7		1.3		µs
24	$t_{r(SDA)}$	Rise time, SDA		1000	$20 + 0.1C_b$ (1)	300	ns
25	$t_{r(SCL)}$	Rise time, SCL		1000	$20 + 0.1C_b$ (1)	300	ns
26	$t_{f(SDA)}$	Fall time, SDA		300	$20 + 0.1C_b$ (1)	300	ns
27	$t_{f(SCL)}$	Fall time, SCL		300	$20 + 0.1C_b$ (1)	300	ns
28	$t_{su(SCLH-SDAH)}$	Setup time, SCL high before SDA high (for STOP condition)	4		0.6		µs
29	C_p	Capacitance for each I2C pin		10		10	pF

(1) C_b = total capacitance of one bus line in pF. If mixed with HS-mode devices, faster fall-times are allowed.

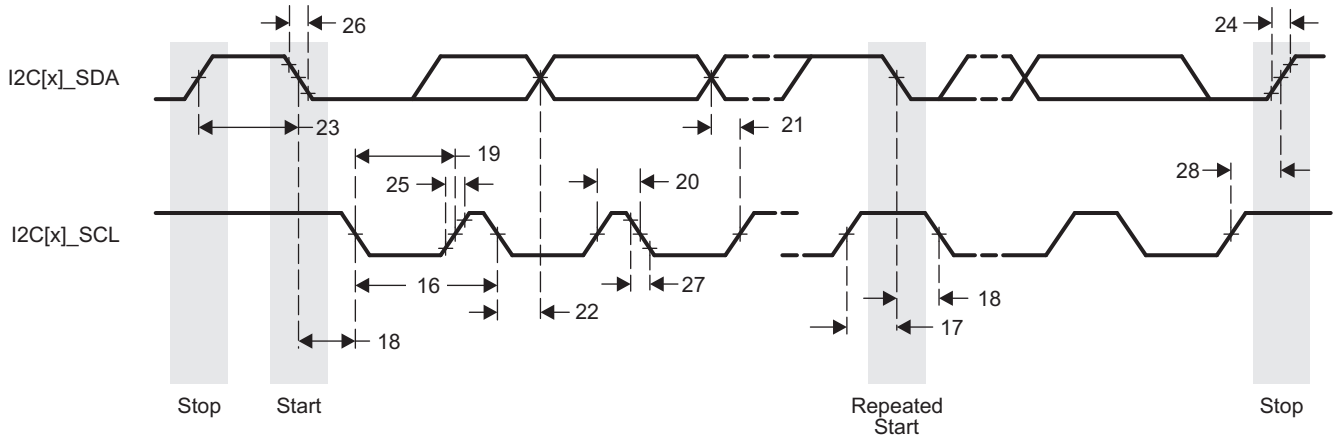

Figure 8-44. I2C Transmit Timing

8.12 Imaging Subsystem (ISS)

The device Imaging Subsystem captures and processes pixel data from external image and video inputs. The inputs can be connected to the Image Processing block through the Parallel Camera Interface (CAM). . In addition, a Timing control module provides flash strobe and mechanical shutter interfaces. The features of each component of the ISS are described below.

- Parallel Camera (CAM) interface features:
  - Input format
    - Bayer pattern Raw (up to 16bit) or YCbCr 422 (8bit or 16bit) data.
    - ITU-R BT.656/1120 standard format
  - Generates HD/VD timing signals and field ID to an external timing generator, or can synchronize to the external timing generator.
  - Support for progressive and interlaced sensors (hardware support for up to 2 fields and firmware supports for higher number of fields, typically 3-, 4-, and 5-field sensors.
- Image Sensor Interface (ISIF) features:
  - Support for up to 32K pixels (image size) in both the horizontal and vertical direction
  - Color space conversion for non-Bayer pattern Raw data
  - Digital black clamping with Horizontal/Vertical offset drift compensation
  - Vertical Line defect correction based on a lookup table
  - Color-dependent gain control and black level offset control
  - Ability to control output to the DDR2/DDR3 via an external write enable signal
  - Down sampling via programmable culling patterns
  - A-law/DPCM compression
  - Generating 16-, 12- or 8-bit output to memory
- Two independent Resizers
  - Providing two different sizes of outputs simultaneously on one input
  - Maximum line width is 5376 and 2336, respectively
  - YUV422 to YUV420 conversion
  - Data output format: RGB565, ARGB888, YUV422 co sited and YUV4:2:0 planar
  - Resizer Ratio: x1/4096 approximately x20
  - Input from memory
- Timing control module features:
  - STROBE signal for flash pre-strobe and flash strobe
  - SHUTTER signal for mechanical shutter control
  - Global reset control

For more detailed information on the ISS, see the ISS Overview section, the ISS Interfaces section, and the ISS ISP section of the *Watchdog Timer* chapter of the *TMS320DM814x DaVinci Digital Media Processors Technical Reference Manual* (Literature Number: SPRUGZ8).

 Copyright © 2011–2013, Texas Instruments Incorporated

8.12.1 ISSCAM Electrical Data/Timing

Table 8-48. Timing Requirements for ISSCAM (see Figure 8-45)

NO.			OPP100/120/166			UNIT
			MIN	NOM	MAX	
1	$t_{c(PCLK)}$	Cycle time, PCLK	6.06			ns
2	$t_{w(PCLKH)}$	Pulse duration, PCLK high	2.73			ns
3	$t_{w(PCLKL)}$	Pulse duration, PCLK low	2.73			ns
4	$t_{t(PCLK)}$	Transition time, PCLK			2.64	ns
5	$t_{su(DATA-PCLK)}$	Input setup time, Data/Control valid before PCLK high/low	3.11			ns
	$t_{su(DE-PCLK)}$		3.11			ns
	$t_{su(VS-PCLK)}$		3.11			ns
	$t_{su(HS-PCLK)}$		3.11			ns
	$t_{su(FLD-PCLK)}$		3.11			ns
6	$t_{h(PCLK-DATA)}$	Input hold time, Data/Control valid after PCLK high/low	-0.15			ns
	$t_{h(PCLK-DE)}$		-0.15			ns
	$t_{h(PCLK-VS)}$		-0.15			ns
	$t_{h(PCLK-HS)}$		-0.15			ns
	$t_{h(PCLK-FLD)}$		-0.15			ns

Copyright © 2011–2013, Texas Instruments Incorporated

Table 8-49. Switching Characteristics Over Recommended Operating Conditions for ISSCAM (see Figure 8-45)

NO.	PARAMETER		OPP100/120/166		UNIT
			MIN	MAX	
15	$t_{d(PCLK-FLD)}$	Delay time, PCLK rising/falling clock edge to Control valid	3	11.5	ns
16	$t_{d(PCLK-VS)}$	Delay time, PCLK rising/falling clock edge to Control valid	3	11.5	ns
17	$t_{d(PCLK-HS)}$	Delay time, PCLK rising/falling clock edge to Control valid	3	11.5	ns
18	$t_{d(PCLK-STROBE)}$	Delay time, PCLK rising/falling clock edge to Control valid	3	11.5	ns
19	$t_{d(PCLK-SHUTTER)}$	Delay time, PCLK rising/falling clock edge to Control valid	3	11.5	ns

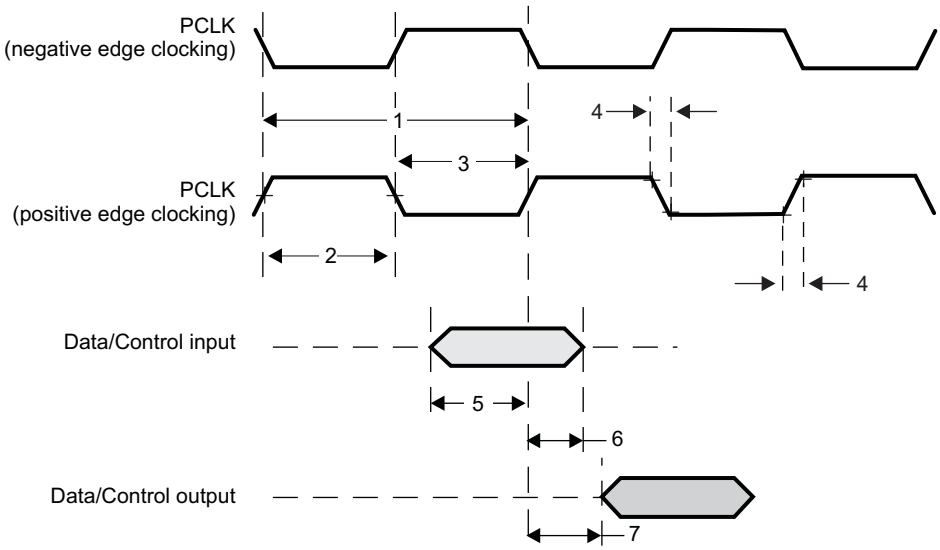

Figure 8-45. ISSCAM Timings

Copyright © 2011–2013, Texas Instruments Incorporated

8.13 DDR2/DDR3 Memory Controller

The device has a dedicated interface to DDR3 and DDR2 SDRAM. The device dedicated interface also supports JEDEC standard compliant DDR2 and DDR3 SDRAM devices with the following features:

- 16-bit or 32-bit data path to external SDRAM memory
- Memory device capacity: 64Mb, 128Mb, 256Mb, 512Mb, 1Gb, 2Gb, and 4Gb devices
- Support for two independent chip selects, with their corresponding register sets, and independent page tracking
- Two interfaces with associated DDR2/DDR3 PHYs
- Dynamic memory manager allows for interleaving of data between the two DDR interfaces.

For details on the DDR2/DDR3 Memory Controller, see the *DDR2/DDR3 Memory Controller* chapter of the *TMS320DM814x DaVinci Digital Media Processors Technical Reference Manual* (Literature Number: SPRUGZ8).

8.13.1 DDR2/3 Memory Controller Register Descriptions

Table 8-50. DDR2/3 Memory Controller Registers

DDR0 HEX ADDRESS	DDR1 HEX ADDRESS	ACRONYM	REGISTER NAME
0x4C00 0004	0x4D00 0004	SDRSTAT	SDRAM Status Register
0x4C00 0008	0x4D00 0008	SDRCR	SDRAM Configuration Register
0x4C00 000C	0x4D00 000C	SDRCR2	SDRAM Configuration Register 2
0x4C00 0010	0x4D00 0010	SDRRCR	SDRAM Refresh Control Register
0x4C00 0014	0x4D00 0014	SDRRCSR	SDRAM Refresh Control Shadow Register
0x4C00 0018	0x4D00 0018	SDRTIM1	SDRAM Timing 1 Register
0x4C00 001C	0x4D00 001C	SDRTIM1SR	SDRAM Timing 1 Shadow Register
0x4C00 0020	0x4D00 0020	SDRTIM2	SDRAM Timing 2 Register
0x4C00 0024	0x4D00 0024	SDRTIM2SR	SDRAM Timing 2 Shadow Register
0x4C00 0028	0x4D00 0028	SDRTIM3	SDRAM Timing 3 Register
0x4C00 002C	0x4D00 002C	SDRTIM3SR	SDRAM Timing 3 Shadow Register
0x4C00 0038	0x4D00 0038	PMCR	Power Management Control Register
0x4C00 003C	0x4D00 003C	PMCSR	Power Management Control Shadow Register
0x4C00 0054	0x4D00 0054	PBBPR	Peripheral Bus Burst Priority Register
0x4C00 00A0	0x4D00 00A0	EOI	End of Interrupt Register
0x4C00 00A4	0x4D00 00A4	SOIRSR	System OCP Interrupt Raw Status Register
0x4C00 00AC	0x4D00 00AC	SOISR	System OCP Interrupt Status Register
0x4C00 00B4	0x4D00 00B4	SOIESR	System OCP Interrupt Enable Set Register
0x4C00 00BC	0x4D00 00BC	SOIECR	System OCP Interrupt Enable Clear Register
0x4C00 00C8	0x4D00 00C8	ZQCR	SDRAM Output Impedance Calibration Configuration Register
0x4C00 00D4	0x4D00 00D4	RDWR_LVL_RMP_WIN	Read-Write Leveling Ramp Window Register
0x4C00 00D8	0x4D00 00D8	RDWR_LVL_RMP_CTRL	Read-Write Leveling Ramp Control Register
0x4C00 00DC	0x4D00 00DC	RWLCR	Read-Write Leveling Control Register
0x4C00 00E4	0x4D00 00E4	DDRPHYCR	DDR PHY Control Register
0x4C00 00E8	0x4D00 00E8	DDRPHYCSR	DDR PHY Control Shadow Register
0x4C00 0100	0x4D00 0100	PRI_COS_MAP	Priority to Class of Service Mapping Register
0x4C00 0104	0x4D00 0104	CONNID_COS_1_MAP	Connection ID to Class of Service 1 Mapping Register
0x4C00 0108	0x4D00 0108	CONNID_COS_2_MAP	Connection ID to Class of Service 2 Mapping Register
0x4C00 0120	0x4D00 0120	RD_WR_EXEC_THRSH	Read Write Execution Threshold Register

8.13.2 DDR2/DDR3 PHY Register Descriptions

Table 8-51. DDR2/DDR3 PHY Registers

DDR0 HEX ADDRESS	DDR1 HEX ADDRESS	ACRONYM	REGISTER NAME
0x47C0_C41C	0x47C0_C81C	CMD0_REG_PHY_CTRL_SLAVE_RATIO_0	DDR PHY Command 0 Address/Command Slave Ratio Register
0x47C0_C428	0x47C0_C828	CMD0_REG_PHY_DLL_LOCK_DIFF_0	DDR PHY Command 0 Address/Command DLL Lock Difference Register
0x47C0_C42C	0x47C0_C82C	CMD0_REG_PHY_INVERT_CLKOUT_0	DDR PHY Command 0 Invert Clockout Selection Register
0x47C0_C450	0x47C0_C850	CMD1_REG_PHY_CTRL_SLAVE_RATIO_0	DDR PHY Command 1 Address/Command Slave Ratio Register
0x47C0_C45C	0x47C0_C85C	CMD1_REG_PHY_DLL_LOCK_DIFF_0	DDR PHY Command 1 Address/Command DLL Lock Difference Register

Copyright © 2011–2013, Texas Instruments Incorporated

Table 8-51. DDR2/DDR3 PHY Registers (continued)

DDR0 HEX ADDRESS	DDR1 HEX ADDRESS	ACRONYM	REGISTER NAME
0x47C0_C460	0x47C0_C860	CMD1_REG_PHY_INVERT_CLKOUT_0	DDR PHY Command 1 Invert Clockout Selection Register
0x47C0_C484	0x47C0_C884	CMD2_REG_PHY_CTRL_SLAVE_RATIO_0	DDR PHY Command 2 Address/Command Slave Ratio Register
0x47C0_C490	0x47C0_C890	CMD2_REG_PHY_DLL_LOCK_DIFF_0	DDR PHY Command 2 Address/Command DLL Lock Difference Register
0x47C0_C494	0x47C0_C894	CMD2_REG_PHY_INVERT_CLKOUT_0	DDR PHY Command 2 Invert Clockout Selection Register
0x47C0_C4C8	0x47C0_C8C8	DATA0_REG_PHY_RD_DQS_SLAVE_RATIO _0	DDR PHY Data Macro 0 Read DQS Slave Ratio Register
0x47C0_C4DC	0x47C0_C8DC	DATA0_REG_PHY_WR_DQS_SLAVE_RATI O_0	DDR PHY Data Macro 0 Write DQS Slave Ratio Register
0x47C0_C4F0	0x47C0_C8F0	DATA0_REG_PHY_WRLVL_INIT_RATIO_0	DDR PHY Data Macro 0 Write Leveling Init Ratio Register
0x47C0_C4F8	0x47C0_C8F8	DATA0_REG_PHY_WRLVL_INIT_MODE_0	DDR PHY Data Macro 0 Write Leveling Init Mode Ratio Selection Register
0x47C0_C4FC	0x47C0_C8FC	DATA0_REG_PHY_GATELVL_INIT_RATIO_0	DDR PHY Data Macro 0 DQS Gate Training Init Ratio Register
0x47C0_C504	0x47C0_C904	DATA0_REG_PHY_GATELVL_INIT_MODE_0	DDR PHY Data Macro 0 DQS Gate Training Init Mode Ratio Selection Register
0x47C0_C508	0x47C0_C908	DATA0_REG_PHY_FIFO_WE_SLAVE_RATI O_0	DDR PHY Data Macro 0 DQS Gate Slave Ratio Register
0x47C0_C51C	0x47C0_C91C	DATA0_REG_PHY_DQ_OFFSET_0	Offset Value From DQS to DQ for Data Macro 0
0x47C0_C520	0x47C0_C920	DATA0_REG_PHY_WR_DATA_SLAVE_RATI O_0	DDR PHY Data Macro 0 Write Data Slave Ratio Register
0x47C0_C534	0x47C0_C934	DATA0_REG_PHY_USE_RANK0_DELAYS	DDR PHY Data Macro 0 Delay Selection Register
0x47C0_C538	0x47C0_C938	DATA0_REG_PHY_DLL_LOCK_DIFF_0	DDR PHY Data Macro 0 DLL Lock Difference Register
0x47C0_C56C	0x47C0_C96C	DATA1_REG_PHY_RD_DQS_SLAVE_RATIO _0	DDR PHY Data Macro 1 Read DQS Slave Ratio Register
0x47C0_C580	0x47C0_C980	DATA1_REG_PHY_WR_DQS_SLAVE_RATI O_0	DDR PHY Data Macro 1 Write DQS Slave Ratio Register
0x47C0_C594	0x47C0_C994	DATA1_REG_PHY_WRLVL_INIT_RATIO_0	DDR PHY Data Macro 1 Write Leveling Init Ratio Register
0x47C0_C59C	0x47C0_C99C	DATA1_REG_PHY_WRLVL_INIT_MODE_0	DDR PHY Data Macro 1 Write Leveling Init Mode Ratio Selection Register
0x47C0_C5A0	0x47C0_C9A0	DATA1_REG_PHY_GATELVL_INIT_RATIO_0	DDR PHY Data Macro 1 DQS Gate Training Init Ratio Register
0x47C0_C5A8	0x47C0_C9A8	DATA1_REG_PHY_GATELVL_INIT_MODE_0	DDR PHY Data Macro 1 DQS Gate Training Init Mode Ratio Selection Register
0x47C0_C5AC	0x47C0_C9AC	DATA1_REG_PHY_FIFO_WE_SLAVE_RATI O_0	DDR PHY Data Macro 1 DQS Gate Slave Ratio Register
0x47C0_C5C0	0x47C0_C9C0	DATA1_REG_PHY_DQ_OFFSET_1	Offset Value From DQS to DQ for Data Macro 1
0x47C0_C5C4	0x47C0_C9C4	DATA1_REG_PHY_WR_DATA_SLAVE_RATI O_0	DDR PHY Data Macro 1 Write Data Slave Ratio Register
0x47C0_C5D8	0x47C0_C9D8	DATA1_REG_PHY_USE_RANK0_DELAYS	DDR PHY Data Macro 1 Delay Selection Register
0x47C0_C5DC	0x47C0_C9DC	DATA1_REG_PHY_DLL_LOCK_DIFF_0	DDR PHY Data Macro 1 DLL Lock Difference Register

Copyright © 2011–2013, Texas Instruments Incorporated

Table 8-51. DDR2/DDR3 PHY Registers (continued)

DDR0 HEX ADDRESS	DDR1 HEX ADDRESS	ACRONYM	REGISTER NAME
0x47C0_C610	0x47C0_CA10	DATA2_REG_PHY_RD_DQS_SLAVE_RATIO _0	DDR PHY Data Macro 2 Read DQS Slave Ratio Register
0x47C0_C624	0x47C0_CA24	DATA2_REG_PHY_WR_DQS_SLAVE_RATI O_0	DDR PHY Data Macro 2 Write DQS Slave Ratio Register
0x47C0_C638	0x47C0_CA38	DATA2_REG_PHY_WRLVL_INIT_RATIO_0	DDR PHY Data Macro 2 Write Leveling Init Ratio Register
0x47C0_C640	0x47C0_CA40	DATA2_REG_PHY_WRLVL_INIT_MODE_0	DDR PHY Data Macro 2 Write Leveling Init Mode Ratio Selection Register
0x47C0_C644	0x47C0_CA44	DATA2_REG_PHY_GATELVL_INIT_RATIO_0	DDR PHY Data Macro 2 DQS Gate Training Init Ratio Register
0x47C0_C64C	0x47C0_CA4C	DATA2_REG_PHY_GATELVL_INIT_MODE_0	DDR PHY Data Macro 2 DQS Gate Training Init Mode Ratio Selection Register
0x47C0_C650	0x47C0_CA50	DATA2_REG_PHY_FIFO_WE_SLAVE_RATI O_0	DDR PHY Data Macro 2 DQS Gate Slave Ratio Register
0x47C0_C664	0x47C0_CA64	DATA2_REG_PHY_DQ_OFFSET_2	Offset value from DQS to DQ for Data Macro 2
0x47C0_C668	0x47C0_CA68	DATA2_REG_PHY_WR_DATA_SLAVE_RATI O_0	DDR PHY Data Macro 2 Write Data Slave Ratio Register
0x47C0_C67C	0x47C0_CA7C	DATA2_REG_PHY_USE_RANK0_DELAYS	DDR PHY Data Macro 2 Delay Selection Register
0x47C0_C680	0x47C0_CA80	DATA2_REG_PHY_DLL_LOCK_DIFF_0	DDR PHY Data Macro 2 DLL Lock Difference Register
0x47C0_C6B4	0x47C0_CAB4	DATA3_REG_PHY_RD_DQS_SLAVE_RATIO _0	DDR PHY Data Macro 3 Read DQS Slave Ratio Register
0x47C0_C6C8	0x47C0_CAC8	DATA3_REG_PHY_WR_DQS_SLAVE_RATI O_0	DDR PHY Data Macro 3 Write DQS Slave Ratio Register
0x47C0_C6DC	0x47C0_CADC	DATA3_REG_PHY_WRLVL_INIT_RATIO_0	DDR PHY Data Macro 3 Write Leveling Init Ratio Register
0x47C0_C6E4	0x47C0_CAE4	DATA3_REG_PHY_WRLVL_INIT_MODE_0	DDR PHY Data Macro 3 Write Leveling Init Mode Ratio Selection Register
0x47C0_C6E8	0x47C0_CAE8	DATA3_REG_PHY_GATELVL_INIT_RATIO_0	DDR PHY Data Macro 3 DQS Gate Training Init Ratio Register
0x47C0_C6F0	0x47C0_CAF0	DATA3_REG_PHY_GATELVL_INIT_MODE_0	DDR PHY Data Macro 3 DQS Gate Training Init Mode Ratio Selection Register
0x47C0_C6F4	0x47C0_CAF4	DATA3_REG_PHY_FIFO_WE_SLAVE_RATI O_0	DDR PHY Data Macro 3 DQS Gate Slave Ratio Register
0x47C0_C708	0x47C0_CB08	DATA3_REG_PHY_DQ_OFFSET_3	Offset Value From DQS to DQ for Data Macro 3
0x47C0_C70C	0x47C0_CB0C	DATA3_REG_PHY_WR_DATA_SLAVE_RATI O_0	DDR PHY Data Macro 3 Write Data Slave Ratio Register
0x47C0_C720	0x47C0_CB20	DATA3_REG_PHY_USE_RANK0_DELAYS	DDR PHY Data Macro 3 Delay Selection Register
0x47C0_C724	0x47C0_CB24	DATA3_REG_PHY_DLL_LOCK_DIFF_0	DDR PHY Data Macro 3 DLL Lock Difference Register

8.13.3 DDR-Related Control Module Registers Description

Table 8-52. DDR-Related Control Module Registers

HEX ADDRESS RANGE	ACRONYM	REGISTER NAME
0x4814 0694	EMIF_CLK_GATE	EMIF0/1 PHY Clock Gate Control Register
0x4814 0E04	DDR0_IO_CTRL	DDR Memory Controller_0 IO Control Register
0x4814 0E08	DDR1_IO_CTRL	DDR Memory Controller_1 IO Control Register

Copyright © 2011–2013, Texas Instruments Incorporated

Table 8-52. DDR-Related Control Module Registers (continued)

HEX ADDRESS RANGE	ACRONYM	REGISTER NAME
0x4814 0E0C	DDR_VTP_CTRL_0	DDR0 VTP Control Register
0x4814 0E10	DDR_VTP_CTRL_1	DDR1 VTP Control Register

8.13.4 DDR2/DDR3 Memory Controller Electrical Data/Timing

TI only supports board designs that follow the DDR2 and DDR3 Routing Specifications outlined in this document. The switching characteristics and the timing diagram for the DDR2 memory controller are shown in Table 8-53 and Figure 8-46.

Table 8-53. Switching Characteristics Over Recommended Operating Conditions for DDR2/DDR3 Memory Controller (1)

NO.				OPP100/120/166		UNIT
				MIN	MAX	
1	$t_{c(DDR_CLK)}$	Cycle time, DDR[x]_CLK	DDR2 mode	2.5		ns
			DDR3 mode	1.876		

(1) The PLL_DDR Controller *must* be programmed such that the resulting DDR[x]_CLK clock frequency is within the specified range.

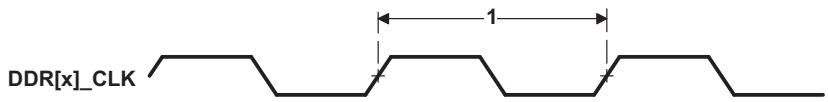

Figure 8-46. DDR2/DDR3 Memory Controller Clock Timing

8.13.4.1 DDR2 Routing Specifications

8.13.4.1.1 DDR2 Interface

This section provides the timing specification for the DDR2 interface as a PCB design and manufacturing specification. The design rules constrain PCB trace length, PCB trace skew, signal integrity, cross-talk, and signal timing. These rules, when followed, result in a reliable DDR2 memory system without the need for a complex timing closure process. For more information regarding the guidelines for using this DDR2 specification, see the *Understanding TI's PCB Routing Rule-Based DDR Timing Specification* Application Report (Literature Number: SPRAAV0).

8.13.4.1.1.1 DDR2 Interface Schematic

Figure 8-47 shows the DDR2 interface schematic for a x32 DDR2 memory system. In Figure 8-48 the x16 DDR2 system schematic is identical except that the high-word DDR2 device is deleted.

When not using all or part of a DDR2 interface, the proper method of handling the unused pins is to tie off the DDR[x]_DQS[n] pins to the corresponding DVDD_DDR[x] supply via a 1k-Ω resistor and pulling the DDR[x]_DQS[n] pins to ground via a 1k-Ω resistor. This needs to be done for each byte not used. Also, include the 50-Ω pulldown for DDR[x]_VTP. The DVDD_DDR[x] and VREFSSTL_DDR[x] power supply pins need to be connected to their respective power supplies even if DDR[x] is not being used. All other DDR interface pins can be left unconnected. Note that the supported modes for use of the DDR EMIF are 32-bits wide, 16-bits wide, or not used.

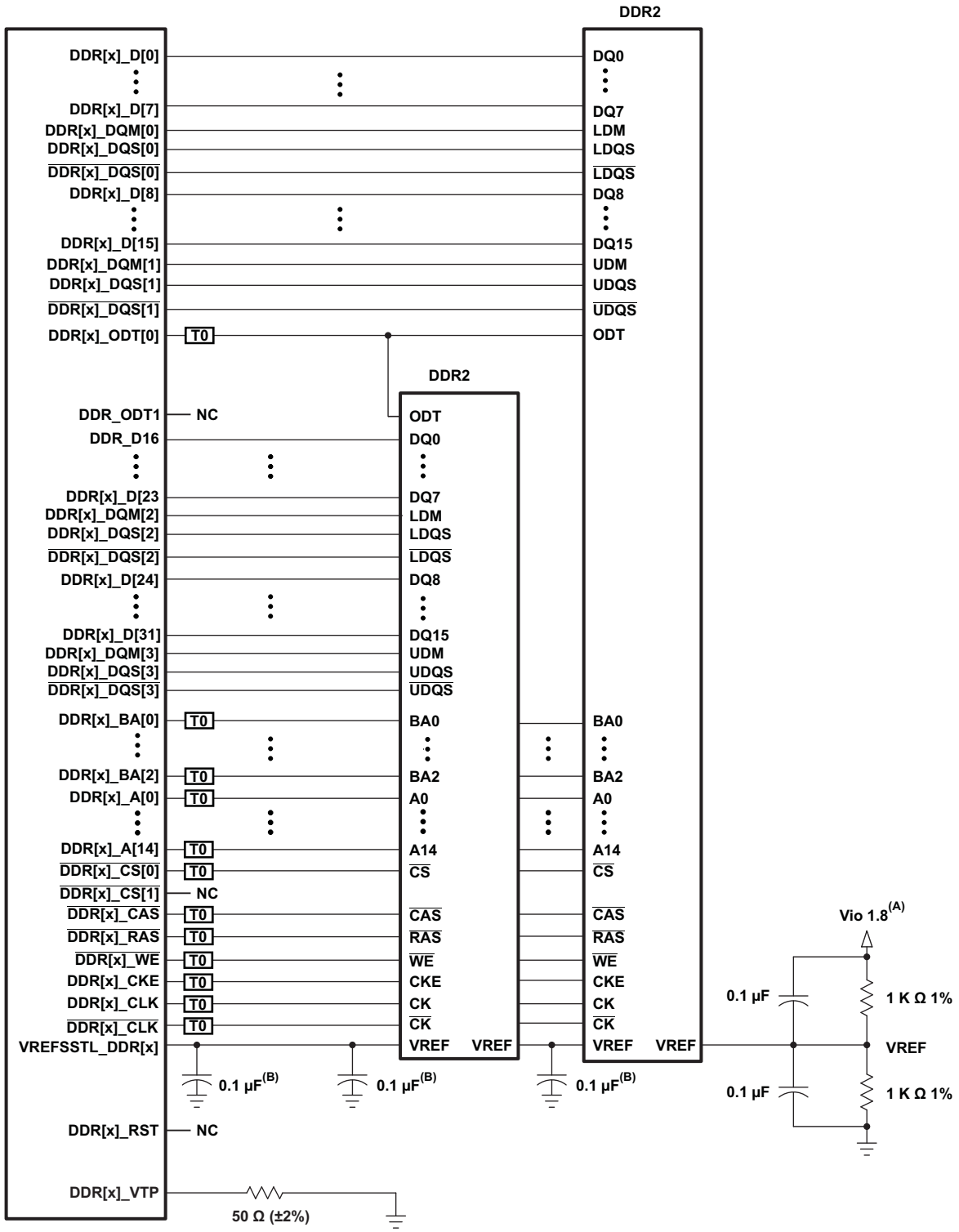

T0 Termination is required. See terminator comments.

A. Vio1.8 is the power supply for the DDR2 memories and the DM814x DDR2 interface.

B. One of these capacitors can be eliminated if the divider and its capacitors are placed near a VREF pin.

Figure 8-47. 32-Bit DDR2 High-Level Schematic

Copyright © 2011–2013, Texas Instruments Incorporated

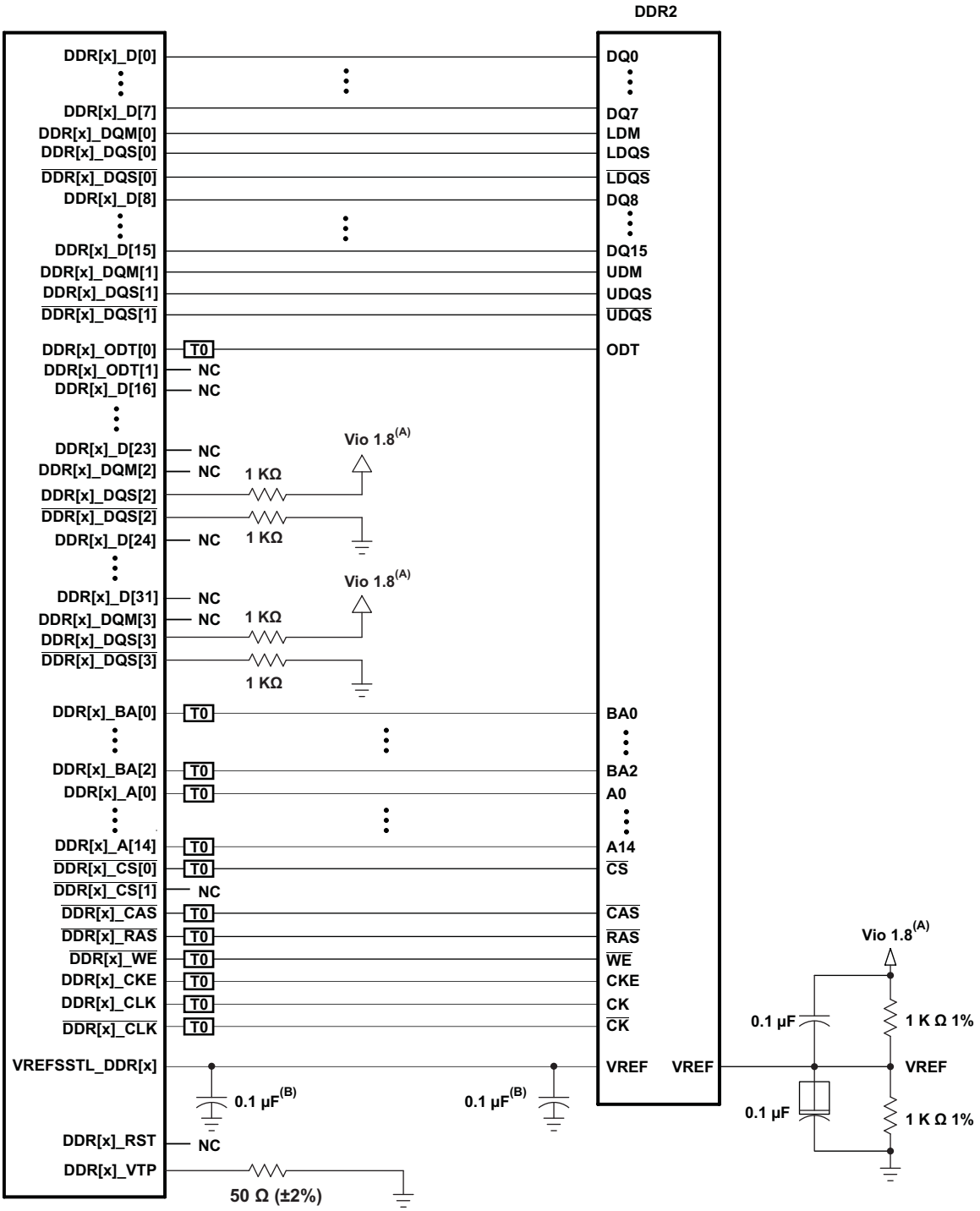

T0 Termination is required. See terminator comments.

A. Vio1.8 is the power supply for the DDR2 memories and the DM814x DDR2 interface.

B. One of these capacitors can be eliminated if the divider and its capacitors are placed near a VREF pin.

Figure 8-48. 16-Bit DDR2 High-Level Schematic

8.13.4.1.1.2 Compatible JEDEC DDR2 Devices

Table 8-54 shows the parameters of the JEDEC DDR2 devices that are compatible with this interface. Generally, the DDR2 interface is compatible with x16 DDR2-800 speed grade DDR2 devices.

Table 8-54. Compatible JEDEC DDR2 Devices (Per Interface)

NO.	PARAMETER	MIN	MAX	UNIT
1	JEDEC DDR2 device speed grade(1)	DDR2-800		
2	JEDEC DDR2 device bit width	x16	x16	Bits
3	JEDEC DDR2 device count(2)	1	2	Devices
4	JEDEC DDR2 device ball count(3)	84	92	Balls

(1) Higher DDR2 speed grades are supported due to inherent JEDEC DDR2 backwards compatibility.
(2) One DDR2 device is used for a 16-bit DDR2 memory system. Two DDR2 devices are used for a 32-bit DDR2 memory system.
(3) The 92-ball devices are retained for legacy support. New designs will migrate to 84-ball DDR2 devices. Electrically, the 92- and 84-ball DDR2 devices are the same.

8.13.4.1.1.3 PCB Stackup

The minimum stackup required for routing the DM814x device is a six-layer stackup as shown in Table 8-55. Additional layers may be added to the PCB stackup to accommodate other circuitry or to reduce the size of the PCB footprint.

Table 8-55. Minimum PCB Stackup

LAYER	TYPE	DESCRIPTION
1	Signal	Top routing mostly horizontal
2	Plane	Ground
3	Plane	Power
4	Signal	Internal routing
5	Plane	Ground
6	Signal	Bottom routing mostly vertical

Copyright © 2011–2013, Texas Instruments Incorporated

Complete stackup specifications are provided in Table 8-56.

Table 8-56. PCB Stackup Specifications

NO.	PARAMETER	MIN	TYP	MAX	UNIT
1	PCB routing/plane layers	6			
2	Signal routing layers	3			
3	Full ground layers under DDR2 routing region	2			
4	Number of ground plane cuts allowed within DDR routing region			0	
5	Number of ground reference planes required for each DDR2 routing layer	1			
6	Number of layers between DDR2 routing layer and reference ground plane			0	
7	PCB routing feature size		4		Mils
8	PCB trace width, w		4		Mils
9	PCB BGA escape via pad size(1)		18	20	Mils
10	PCB BGA escape via hole size(1)		10		Mils
11	Processor BGA pad size		0.4		mm
13	Single-ended impedance, Zo	50		75	Ω
14	Impedance control(2)	Z-5	Z	Z+5	Ω

(1) A 20/10 via may be used if enough power routing resources are available. An 18/10 via allows for more flexible power routing to the processor.
(2) Z is the nominal singled-ended impedance selected for the PCB specified by item 13.

8.13.4.1.1.4 Placement

Figure 8-49 shows the required placement for the processor as well as the DDR2 devices. The dimensions for this figure are defined in Table 8-57. The placement does not restrict the side of the PCB on which the devices are mounted. The ultimate purpose of the placement is to limit the maximum trace lengths and allow for proper routing space. For a 16-bit DDR memory system, the high-word DDR2 device is omitted from the placement.

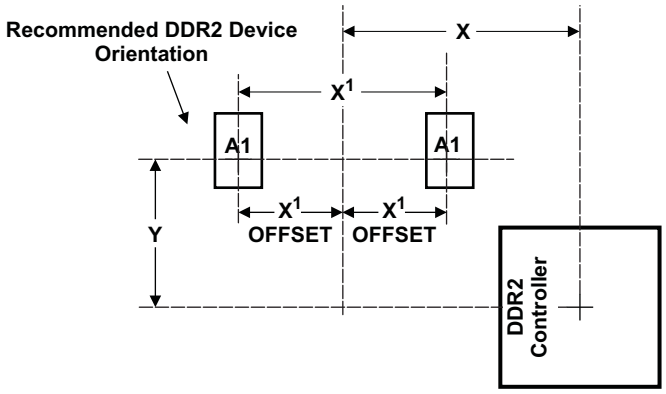

Figure 8-49. DM814x Device and DDR2 Device Placement

Table 8-57. Placement Specifications

NO.	PARAMETER	MIN	MAX	UNIT
1	X + Y (1)(2)		1660	Mils
2	X' (1)(2)		1280	Mils
3	X' Offset (1)(2) (3)		650	Mils
4	DDR2 keepout region (4)			
5	Clearance from non-DDR2 signal to DDR2 keepout region (5)	4		w

(1) For dimension definitions, see Figure 8-47.
(2) Measurements from center of processor to center of DDR2 device.
(3) For 16-bit memory systems, it is recommended that X' offset be as small as possible.
(4) DDR2 keepout region to encompass entire DDR2 routing area.
(5) Non-DDR2 signals allowed within DDR2 keepout region provided they are separated from DDR2 routing layers by a ground plane.

Copyright © 2011–2013, Texas Instruments Incorporated

8.13.4.1.1.5 DDR2 Keepout Region

The region of the PCB used for the DDR2 circuitry must be isolated from other signals. The DDR2 keepout region is defined for this purpose and is shown in Figure 8-50. The size of this region varies with the placement and DDR routing. Additional clearances required for the keepout region are shown in Table 8-57.

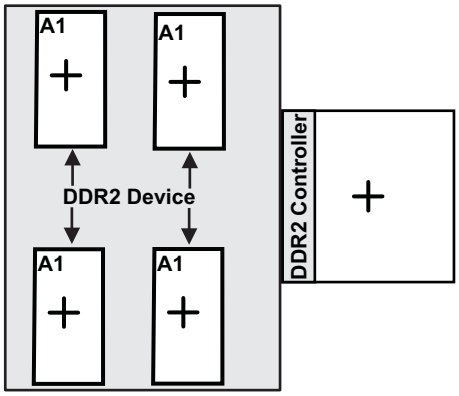

Figure 8-50. DDR2 Keepout Region

NOTE

The region shown in should encompass all the DDR2 circuitry and varies depending on placement. Non-DDR2 signals should not be routed on the DDR signal layers within the DDR2 keepout region. Non-DDR2 signals may be routed in the region, provided t hey are routed on layers separated from DDR2 signal layers by a ground layer. No breaks should be allowed in the reference ground layers in this region. In addition, the 1.8-V power plane should cover the entire keepout region. Routes for the two DDR interfaces must be separated by at least 4x; the more separation, the better.

8.13.4.1.1.6 Bulk Bypass Capacitors

Bulk bypass capacitors are required for moderate speed bypassing of the DDR2 and other circuitry. Table 8-58 contains the minimum numbers and capacitance required for the bulk bypass capacitors. Note that this table only covers the bypass needs of the DDR2 interfaces and DDR2 device. Additional bulk bypass capacitance may be needed for other circuitry.

Table 8-58. Bulk Bypass Capacitors

No.	Parameter	Min	Max	Unit
1	DVDD18 bulk bypass capacitor count(1)	6		Devices
2	DVDD18 bulk bypass total capacitance	60		µF
3	DDR#1 bulk bypass capacitor count(1)	1		Devices
4	DDR#1 bulk bypass total capacitance(1)	10		µF
5	DDR#2 bulk bypass capacitor count(2)	1		Devices
6	DDR#2 bulk bypass total capacitance(1)(2)	10		µF

(1) These devices should be placed near the device they are bypassing, but preference should be given to the placement of the high-speed (HS) bypass capacitors. Use half of these capacitors for DDR[0] and half for DDR[1].
(2) Only used on 32-bit wide DDR2 memory systems.

8.13.4.1.1.7 High-Speed Bypass Capacitors

High-speed (HS) bypass capacitors are critical for proper DDR2 interface operation. It is particularly important to minimize the parasitic series inductance of the HS bypass capacitors, processor/DDR power, and processor/DDR ground connections. Table 8-59 contains the specification for the HS bypass capacitors as well as for the power connections on the PCB.

Table 8-59. High-Speed Bypass Capacitors

NO.	PARAMETER	MIN	MAX	UNIT
1	HS bypass capacitor package size (1)		0402	10 Mils
2	Distance from HS bypass capacitor to device being bypassed		250	Mils
3	Number of connection vias for each HS bypass capacitor (2)	2		Vias
4	Trace length from bypass capacitor contact to connection via	1	30	Mils
5	Number of connection vias for each processor power/ground ball	1		Vias
6	Trace length from processor power/ground ball to connection via		35	Mils
7	Number of connection vias for each DDR2 device power/ground ball	1		Vias
8	Trace length from DDR2 device power/ground ball to connection via		35	Mils
9	DVDD18 HS bypass capacitor count (3) (4)	40		Devices
10	DVDD18 HS bypass capacitor total capacitance (5)	2.4		µF
11	DDR device HS bypass capacitor count (6) (7)	8		Devices
12	DDR device HS bypass capacitor total capacitance (7)	0.4		µF

(1) LxW, 10-mil units, that is, a 0402 is a 40x20-mil surface-mount capacitor.
(2) An additional HS bypass capacitor can share the connection vias only if it is mounted on the opposite side of the board.
(3) These devices should be placed as close as possible to the device being bypassed.
(4) Use half of these capacitors for DDR[0] and half for DDR[1].
(5) Use half of these capacitors for DDR[0] and half for DDR[1].
(6) These devices should be placed as close as possible to the device being bypassed.
(7) Per DDR device.

8.13.4.1.1.8 Net Classes

Table 8-60 lists the clock net classes for the DDR2 interface. Table 8-61 lists the signal net classes, and associated clock net classes, for the signals in the DDR2 interface. These net classes are used for the termination and routing rules that follow.

Table 8-60. Clock Net Class Definitions

CLOCK NET CLASS	PROCESSOR PIN NAMES
CK	DDR[x]_CLK/$\overline{\text{DDR[x]_CLK}}$
DQS0	DDR[x]_DQS[0]/$\overline{\text{DDR[x]_DQS[0]}}$
DQS1	DDR[x]_DQS[1]/$\overline{\text{DDR[x]_DQS[1]}}$
DQS2 (1)	DDR[x]_DQS[2]/$\overline{\text{DDR[x]_DQS[2]}}$
DQS3 (1)	DDR[x]_DQS[3]/$\overline{\text{DDR[x]_DQS[3]}}$

(1) Only used on 32-bit wide DDR2 memory systems.

Copyright © 2011–2013, Texas Instruments Incorporated

Table 8-61. Signal Net Class Definitions

CLOCK NET CLASS	ASSOCIATED CLOCK NET CLASS	PROCESSOR PIN NAMES
ADDR_CTRL	CK	DDR[x]_BA[2:0], DDR[x]_A[14:0], $\overline{\text{DDR[x]_CS[x]}}$, $\overline{\text{DDR[x]_CAS}}$, $\overline{\text{DDR[x]_RAS}}$, $\overline{\text{DDR[x]_WE}}$, DDR[x]_CKE, DDR[x]_ODT[x]
DQ0	DQS0	DDR[x]_D[7:0], DDR[x]_DQM[0]
DQ1	DQS1	DDR[x]_D[15:8], DDR[x]_DQM[1]
DQ2 (1)	DQS2	DDR[x]_D[23:16], DDR[x]_DQM[2]
DQ3 (1)	DQS3	DDR[x]_D[31:24], DDR[x]_DQM[3]

(1) Only used on 32-bit wide DDR2 memory systems.

8.13.4.1.1.9 DDR2 Signal Termination

Signal terminators are required in CK and ADDR_CTRL net classes. Serial terminators may be used on data lines to reduce EMI risk; however, serial terminations are the only type permitted. ODTs are integrated on the data byte net classes. They should be enabled to ensure signal integrity.Table 8-62 shows the specifications for the series terminators.

Table 8-62. DDR2 Signal Terminations

NO.	PARAMETER	MIN	TYP	MAX	UNIT
1	CK net class (1)(2)	0		10	Ω
2	ADDR_CTRL net class (1) (2)(3)(4)	0	22	Zo	Ω
3	Data byte net classes (DQS0-DQS3, DQ0-DQ3) (5)	0		Zo	Ω

(1) Only series termination is permitted, parallel or SST specifically disallowed on board.
(2) Only required for EMI reduction.
(3) Terminator values larger than typical only recommended to address EMI issues.
(4) Termination value should be uniform across net class.
(5) No external terminations allowed for data byte net classes. ODT is to be used.

8.13.4.1.1.10 VREFSSTL_DDR Routing

VREFSSTL_DDR is used as a reference by the input buffers of the DDR2 memories as well as the processor. VREF is intended to be half the DDR2 power supply voltage and should be created using a resistive divider as shown in Figure 8-48. Other methods of creating VREF are not recommended. Figure 8-51 shows the layout guidelines for VREF.

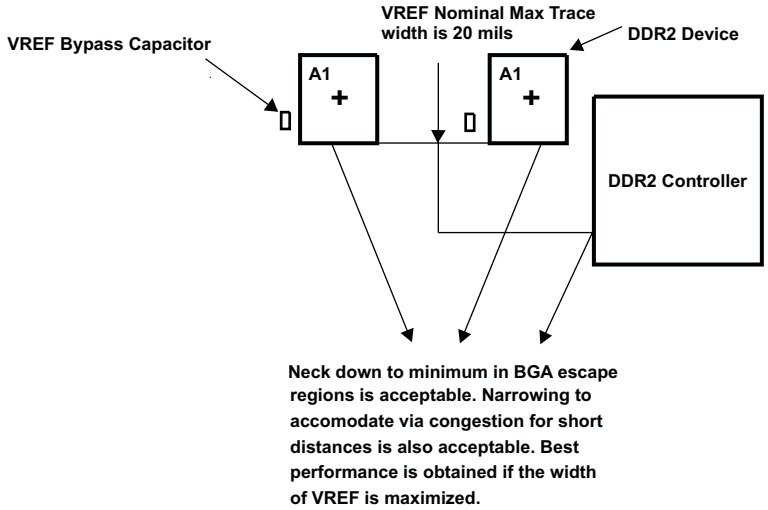

Figure 8-51. VREF Routing and Topology

8.13.4.1.2 DDR2 CK and ADDR_CTRL Routing

Figure 8-52 shows the topology of the routing for the CK and ADDR_CTRL net classes. The route is a balanced *T* as it is intended that the length of segments B and C be equal. In addition, the length of A (A'+A") should be maximized.

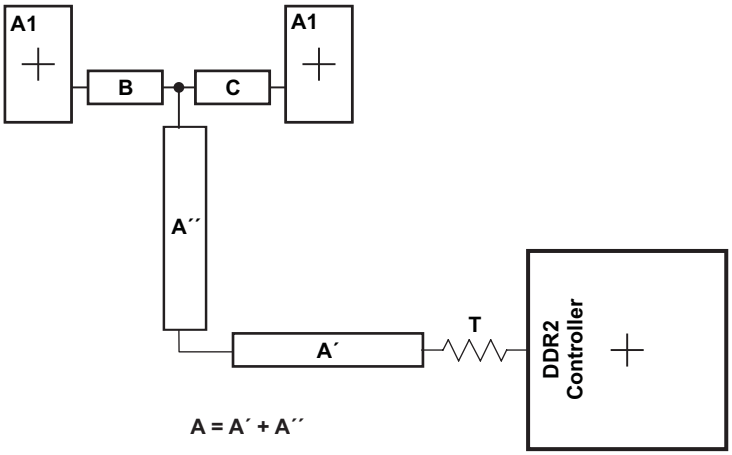

Figure 8-52. CK and ADDR_CTRL Routing and Topology

Table 8-63. CK and ADDR_CTRL Routing Specification (1)

NO.	PARAMETER	MIN	TYP	MAX	UNIT
1	Center-to-center CK-$\overline{CK}$ spacing			2w	
2	CK/$\overline{CK}$ skew(1)			25	Mils
3	CK A-to-B/A-to-C skew length mismatch(2)			25	Mils
4	CK B-to-C skew length mismatch			25	Mils
5	Center-to-center CK to other DDR2 trace spacing(3)	4w			
6	CK/ADDR_CTRL nominal trace length(4)	CACLM-50	CACLM	CACLM+50	Mils
7	ADDR_CTRL-to-CK skew length mismatch			100	Mils
8	ADDR_CTRL-to-ADDR_CTRL skew length mismatch			100	Mils
9	Center-to-center ADDR_CTRL to other DDR2 trace spacing(3)	4w			
10	Center-to-center ADDR_CTRL to other ADDR_CTRL trace spacing(3)	3w			
11	ADDR_CTRL A-to-B/A-to-C skew length mismatch(2)			100	Mils
12	ADDR_CTRL B-to-C skew length mismatch			100	Mils

(1) The length of segment A = A' + A″ as shown in Figure 8-52.
(2) Series terminator, if used, should be located closest to the processor.
(3) Center-to-center spacing is allowed to fall to minimum (w) for up to 500 mils of routed length to accommodate BGA escape and routing congestion.
(4) CACLM is the longest Manhattan distance of the CK and ADDR_CTRL net classes.

Copyright © 2011–2013, Texas Instruments Incorporated

Figure 8-53 shows the topology and routing for the DQS and DQ net classes; the routes are point to point. Skew matching across bytes is not needed nor recommended.

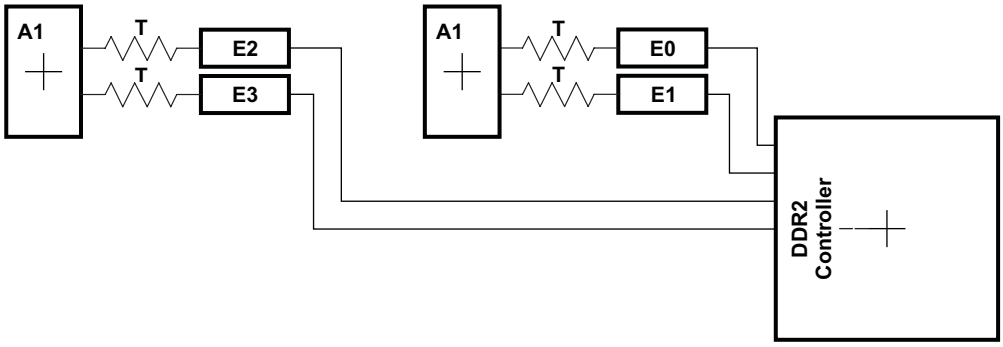

Figure 8-53. DQS and DQ Routing and Topology

Table 8-64. DQS and DQ Routing Specification

NO.	PARAMETER	MIN	TYP	MAX	UNIT
1	Center-to-center DQS-DQSn spacing in E0|E1|E2|E3			2w	
2	DQS-DQSn skew in E0|E1|E2|E3			25	Mils
3	Center-to-center DQS to other DDR2 trace spacing (1)	4w			
4	DQS/DQ nominal trace length (2)(3)(4)	DQLM-50	DQLM	DQLM+50	Mils
5	DQ-to-DQS skew length mismatch (2)(3)(4)			100	Mils
6	DQ-to-DQ skew length mismatch (2)(3)(4)			100	Mils
7	DQ-to-DQ/DQS via count mismatch (2)(3)(4)			1	Vias
8	Center-to-center DQ to other DDR2 trace spacing (1)(5)	4w			
9	Center-to-center DQ to other DQ trace spacing (1)(6)(7)	3w			
10	DQ/DQS E skew length mismatch (2)(3)(4)			100	Mils

(1) Center-to-center spacing is allowed to fall to minimum (w) for up to 500 mils of routed length to accommodate BGA escape and routing congestion.
(2) A 16-bit DDR memory system has two sets of data net classes; one for data byte 0, and one for data byte 1, each with an associated DQS (2 DQSs) per DDR EMIF used.
(3) A 32-bit DDR memory system has four sets of data net classes; one each for data bytes 0 through 3, and each associated with a DQS (4 DQSs) per DDR EMIF used.
(4) There is no need, and it is not recommended, to skew match across data bytes; that is, from DQS0 and data byte 0 to DQS1 and data byte 1.
(5) DQs from other DQS domains are considered *other DDR2 trace*.
(6) DQs from other data bytes are considered *other DDR2 trace*.
(7) DQLM is the longest Manhattan distance of each of the DQS and DQ net classes.

8.13.4.2 DDR3 Routing Specifications

8.13.4.2.1 DDR3 versus DDR2

This specification only covers PCB designs that utilize DDR3 memory. PCB designs using other types of DDR memory should follow the specification appropriate for that type of memory. It is currently not possible to design a single PCB that supports multiple types of DDR memory.

8.13.4.2.2 DDR3 EMIFs

A processor may contain more than one EMIF. This specification covers only one EMIF and needs to be implemented for each additional EMIF. Requirements are identical between the EMIFs, however, the PCB layouts will most likely be different.

8.13.4.2.3 DDR3 Device Combinations

Since there are several possible combinations of device counts and single- or dual-side mounting, Table 8-65 summarizes the supported device configurations.

Table 8-65. Supported DDR3 Device Combinations (1)

NUMBER OF DDR3 DEVICES	DDR3 DEVICE WIDTH (BITS)	MIRRORED?	DDR3 EMIF WIDTH (BITS)
1	16	N	16
2	8	Y (2)	16
2	16	N	32
2	16	Y (2)	32
4	8	N	32
4	8	Y (3)	32

(1) This table is per EMIF.
(2) Two DDR3 devices are mirrored when one device is placed on the top of the board and the second device is placed on the bottom of the board.
(3) This is two mirrored pairs of DDR3 devices.

Copyright © 2011–2013, Texas Instruments Incorporated

8.13.4.2.4 DDR3 Interface Schematic

The DDR3 interface schematic varies, depending upon the width of the DDR3 devices used and the width of the bus used (16 or 32 bits). General connectivity is straightforward and very similar. 16-bit DDR devices look like two 8-bit devices. Figure 8-54 and Figure 8-55 show the schematic connections for 32-bit interfaces using x16 and x8 devices.

Note that a 16-bit wide interface schematic is practically identical to the 32-bit interface; only the high-word DDR memories are removed.

When not using all or part of a DDR3 interface, the proper method of handling the unused pins is to tie off the DDR[x]_DQS[n] pins to the corresponding DVDD_DDR[x] supply via a 1-kΩ resistor and pulling the DDR[x]_DQS[n] pins to ground via a 1k-Ω resistor. This needs to be done for each byte not used. Although these signals have internal pullups and pulldowns, external pullups and pulldowns provide additional protection against external electrical noise causing activity on the signals.Also, include the 50-Ω pulldown for DDR[x]_VTP. The DVDD_DDR[x] and VREFSSTL_DDR[x] power supply pins need to be connected to their respective power supplies even if DDR[x] is not being used. All other DDR interface pins can be left unconnected. Note that the supported modes for use of the DDR EMIF are 32 bits wide, 16 bits wide, or not used.

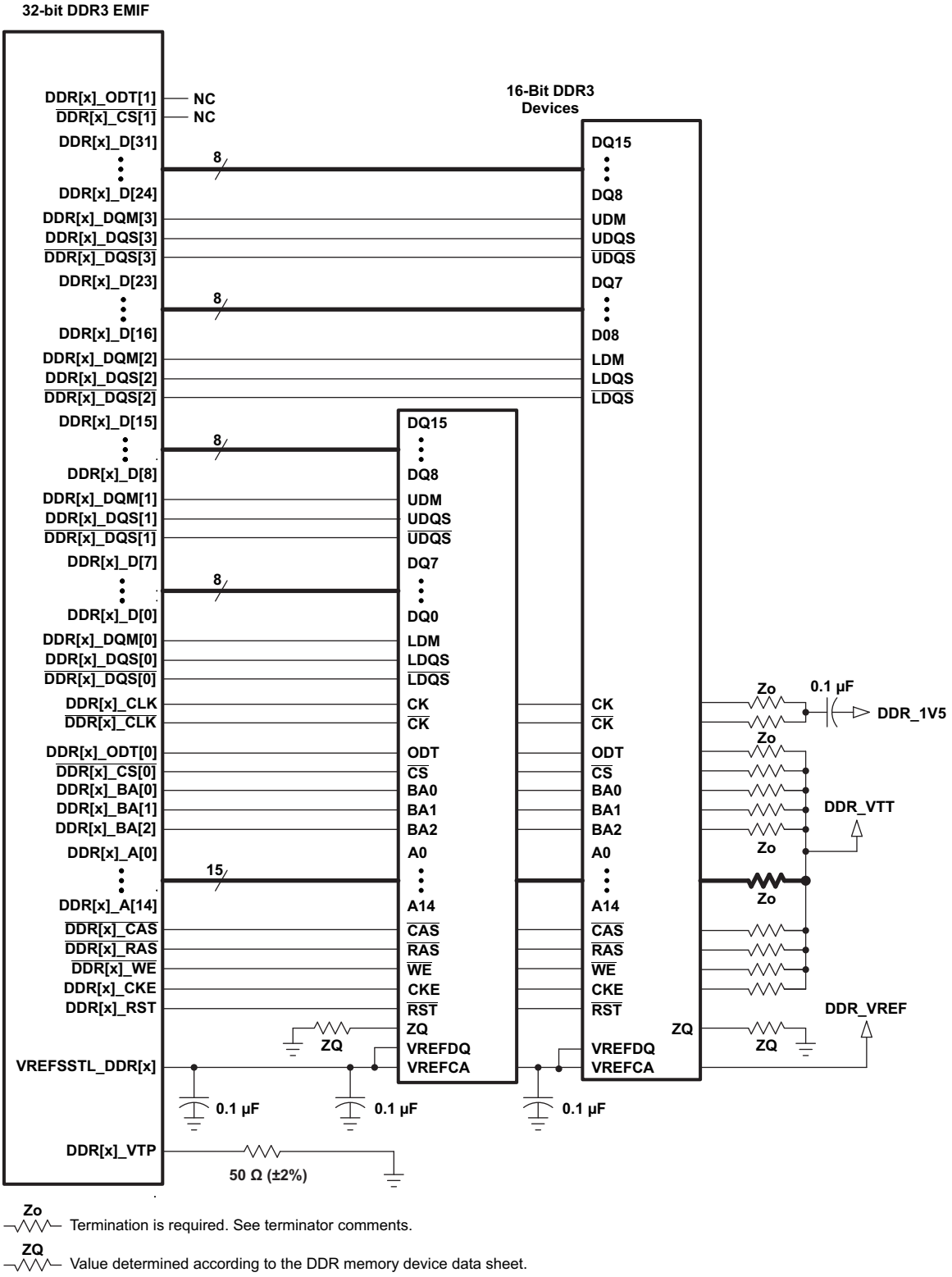

Figure 8-54. 32-Bit, One-Bank DDR3 Interface Schematic Using Two 16-Bit DDR3 Devices

Copyright © 2011–2013, Texas Instruments Incorporated

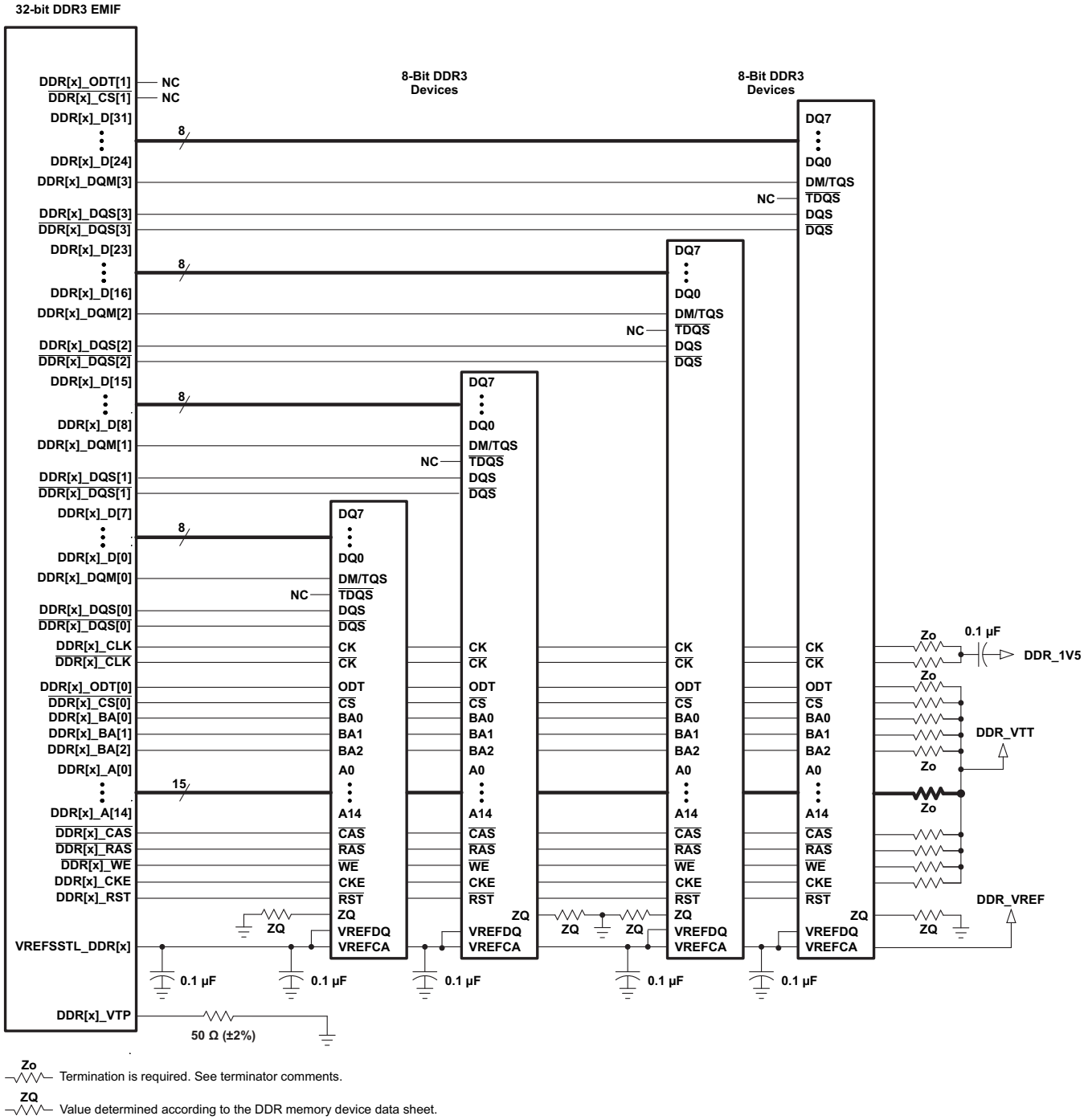

Figure 8-55. 32-Bit, One-Bank DDR3 Interface Schematic Using Four 8-Bit DDR3 Devices

8.13.4.2.4.1 Compatible JEDEC DDR3 Devices

Table 8-66 shows the parameters of the JEDEC DDR3 devices that are compatible with this interface. Generally, the DDR3 interface is compatible with DDR3-1600 devices in the x8 or x16 widths.

Table 8-66. Compatible JEDEC DDR3 Devices (Per Interface)

NO.	PARAMETER	MIN	MAX	UNIT
1	JEDEC DDR3 device speed grade(1)	DDR3-800	DDR3-1600(2)	
2	JEDEC DDR3 device bit width	x8	x16	Bits
3	JEDEC DDR3 device count(3)	2	8	Devices

(1) DDR3 speed grade depends on desired clock rate. Data rate is 2x the clock rate. For DDR3-800, the clock rate is 400 MHz.
(2) DDR3 devices with speed grades up to DDR3-1600 are supported; however, max clock rate will still be limited to 533 MHz as stated in *Switching Characteristics Over Recommended Operating Conditions for DDR3 Memory Controller*.
(3) For valid DDR3 device configurations and device counts, see Section 8.13.4.2.4, Figure 8-54, and Figure 8-55.

8.13.4.2.4.2 PCB Stackup

The minimum stackup for routing the DDR3 interface is a four-layer stack up as shown in Table 8-67. Additional layers may be added to the PCB stackup to accommodate other circuitry, enhance SI/EMI performance, or to reduce the size of the PCB footprint. A six-layer stackup is shown in Table 8-68. Complete stackup specifications are provided in Table 8-69.

Table 8-67. Minimum PCB Stackup

LAYER	TYPE	DESCRIPTION
1	Signal	Top routing mostly vertical
2	Plane	Split power plane
3	Plane	Full ground plane
4	Signal	Bottom routing mostly horizontal

Table 8-68. Six-Layer PCB Stackup Suggestion

LAYER	TYPE	DESCRIPTION
1	Signal	Top routing mostly vertical
2	Plane	Ground
3	Plane	Split power plane
4	Plane	Split power plane or Internal routing
5	Plane	Ground
6	Signal	Bottom routing mostly horizontal

Copyright © 2011–2013, Texas Instruments Incorporated

Table 8-69. PCB Stackup Specifications

NO.	PARAMETER	MIN	TYP	MAX	UNIT
1	PCB routing/plane layers	4	6		
2	Signal routing layers	2			
3	Full ground reference layers under DDR3 routing region (1)	1			
4	Full 1.5-V power reference layers under the DDR3 routing region (1)	1			
5	Number of reference plane cuts allowed within DDR routing region (2)			0	
6	Number of layers between DDR3 routing layer and reference plane (3)			0	
7	PCB routing feature size		4		Mils
8	PCB trace width, w		4		Mils
13	Single-ended impedance, Zo	50		75	Ω
14	Impedance control (4)	Z-5	Z	Z+5	Ω

(1) Ground reference layers are preferred over power reference layers. Be sure to include bypass caps to accommodate reference layer return current as the trace routes switch routing layers.
(2) No traces should cross reference plane cuts within the DDR routing region. High-speed signal traces crossing reference plane cuts create large return current paths which can lead to excessive crosstalk and EMI radiation.
(3) Reference planes are to be directly adjacent to the signal plane to minimize the size of the return current loop.
(4) Z is the nominal singled-ended impedance selected for the PCB specified by item 13.

8.13.4.2.4.3 Placement

Figure 8-56 shows the required placement for the processor as well as the DDR3 devices. The dimensions for this figure are defined in Table 8-70. The placement does not restrict the side of the PCB on which the devices are mounted. The ultimate purpose of the placement is to limit the maximum trace lengths and allow for proper routing space. For a 16-bit DDR memory system, the high-word DDR3 device(s) are omitted from the placement.

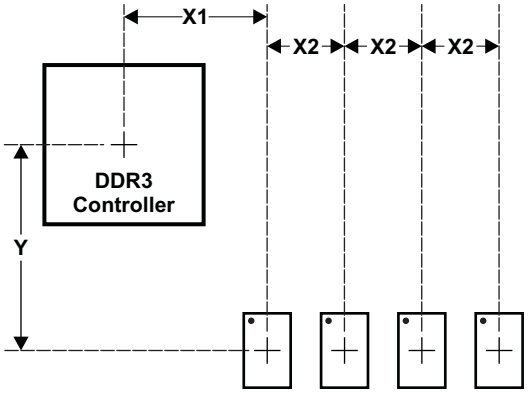

Figure 8-56. Placement Specifications

It is strongly recommended that high-speed bypass capacitors be placed and accommodated for during the placement and route planning phase. It is very difficult to add bypass capacitors once the board has been routed and significant rework may be required to meet the high-speed bypass capacitor requirements in Section 8.13.4.2.4.6, *High-Speed Bypass Capacitors* if the proper planning is not done. A particular challenge to placing bypass capacitors in congested areas is fitting the required vias. It is suggested that each pair of vias support two bypass capacitors by mounting one capacitor on the top of the board and other on the bottom. Do not share vias between capacitors mounted on the same side of the PCB. Another suggestion is to line up the vias for the bypass capacitors for the processor in rows forming channels to allow the signals to escape.

Table 8-70. Placement Specifications

NO.	PARAMETER	MIN	MAX	UNIT
1	X1 (1)(2)(3)		1000	Mils
2	X2 (1)(2)		600	Mils
3	Y Offset (1)(2)(3)		1500	Mils
4	DDR3 keepout region			
5	Clearance from non-DDR3 signal to DDR3 keepout region (4)(5)(6)	4		w

(1) For dimension definitions, see Figure 8-56.
(2) Measurements from center of processor to center of DDR3 device.
(3) Minimizing X1 and Y improves timing margins.
(4) w is defined as the signal trace width.
(5) Non-DDR3 signals allowed within DDR3 keepout region provided they are separated from DDR3 routing layers by a ground plane.
(6) If a device has more than one DDR controller, the signals from the other controller(s) are considered non-DDR3 and should be separated by this specification.

8.13.4.2.4.4 DDR3 Keepout Region

The region of the PCB used for DDR3 circuitry must be isolated from other signals. The DDR3 keepout region is defined for this purpose and is shown in Figure 8-57. The size of this region varies with the placement and DDR routing. Additional clearances required for the keepout region are shown in Table 8-70. Non-DDR3 signals should not be routed on the DDR signal layers within the DDR3 keepout region. Non-DDR3 signals may be routed in the region, provided they are routed on layers separated from the DDR signal layers by a ground layer. No breaks should be allowed in the reference ground layers in this region. In addition, the 1.5-V DDR3 power plane should cover the entire keepout region. Also note that if there is more than one DDR controller, the signals from each controller need to be separated from each other by the specification in Table 8-70, item 5. Each DDR controller should have its own DDR keepout region.

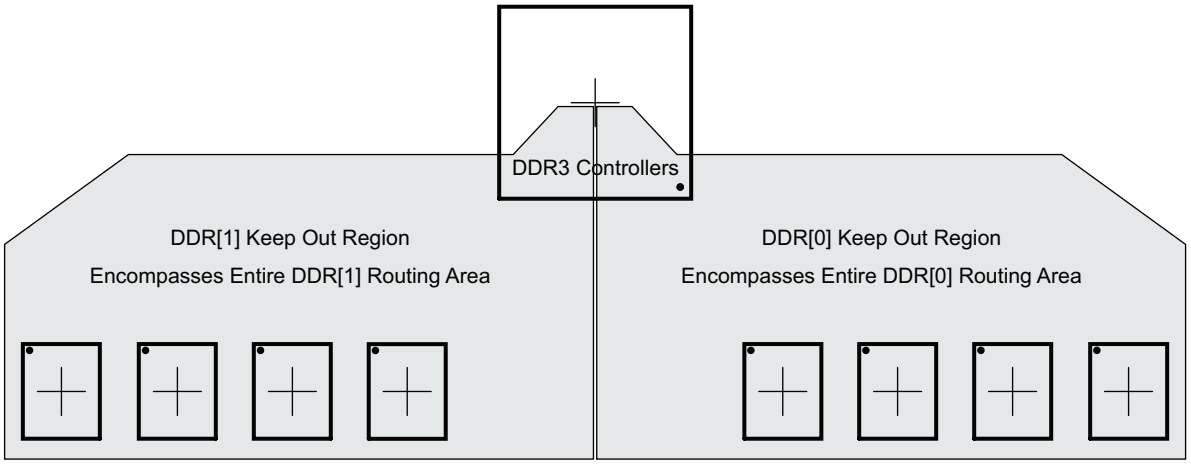

Figure 8-57. DDR3 Keepout Region

Figure 8-57 is an example of a processor with two DDR controllers. Processors with a single DDR controler will have only one DDR keepout region. Each DDR controller should have its own keepout region.

8.13.4.2.4.5 Bulk Bypass Capacitors

Bulk bypass capacitors are required for moderate speed bypassing of the DDR3 and other circuitry. Table 8-71 contains the minimum numbers and capacitance required for the bulk bypass capacitors. Note that this table only covers the bypass needs of the DDR3 controllers and DDR3 device(s). Additional bulk bypass capacitance may be needed for other circuitry.

Copyright © 2011–2013, Texas Instruments Incorporated

Table 8-71. Bulk Bypass Capacitors Per DDR3 EMIF

NO.	PARAMETER	MIN	MAX	UNIT
1	DDR_1V5 bulk bypass capacitor count(1)	3		Devices
2	DDR_1V5 bulk bypass total capacitance	70		µF

(1) These devices should be placed near the devices they are bypassing, but preference should be given to the placement of the high-speed (HS) bypass capacitors and DDR3 signal routing.

8.13.4.2.4.6 High-Speed Bypass Capacitors

High-speed (HS) bypass capacitors are critical for proper DDR3 interface operation. It is particularly important to minimize the parasitic series inductance of the HS bypass capacitors, processor/DDR power, and processor/DDR ground connections. Table 8-72 contains the specification for the HS bypass capacitors as well as for the power connections on the PCB. Generally speaking, it is good to:

1. Fit as many HS bypass capacitors as possible.
2. Minimize the distance from the bypass cap to the pins/balls being bypassed.
3. Use the smallest physical sized capacitors possible with the highest capacitance readily available.
4. Connect the bypass capacitor pads to their vias using the widest traces possible and using the largest hole size via possible.
5. Minimize via sharing. Note the limits on via sharing shown in Table 8-72.

Table 8-72. High-Speed Bypass Capacitors

NO.	PARAMETER	MIN	TYP	MAX	UNIT
1	HS bypass capacitor package size(1)		201	402	10 Mils
2	Distance, HS bypass capacitor to processor being bypassed(2)(3)(4)			400	Mils
3	Processor DDR_1V5 HS bypass capacitor count(5)	35			Per DDR3 EMIF
4	Processor DDR_1V5 HS bypass capacitor total capacitance	5			µF
5	Number of connection vias for each device power/ground ball(6)				Vias
6	Trace length from device power/ground ball to connection via(2)		35	70	Mils
7	Distance, HS bypass capacitor to DDR device being bypassed(7)			150	Mils
8	DDR3 device HS bypass capacitor count(8)	12			Devices
9	DDR3 device HS bypass capacitor total capacitance(8)	0.85			µF
10	Number of connection vias for each HS capacitor(9)(10)	2			Vias
11	Trace length from bypass capacitor connect to connection via(2)(10)		35	100	Mils
12	Number of connection vias for each DDR3 device power/ground ball(11)	1			Vias
13	Trace length from DDR3 device power/ground ball to connection via(2)(9)		35	60	Mils

(1) LxW, 10-mil units, i.e., a 0402 is a 40x20-mil surface-mount capacitor.
(2) Closer/shorter is better.
(3) Measured from the nearest processor power/ground ball to the center of the capacitor package.
(4) Three of these capacitors should be located underneath the processor, between the cluster of DDR_1V5 balls and ground balls, between the DDR interfaces on the package.
(5) Per DDR3 EMIF. For example, a processor with two DDR3 EMIFs would require 70 capacitors. The capacitors should be evenly distributed near the Processor's DDR_1V5 pins.
(6) See the Via Channel™ escape for the processor package.
(7) Measured from the DDR3 device power/ground ball to the center of the capacitor package.
(8) Per DDR3 EMIF.
(9) An additional HS bypass capacitor can share the connection vias only if it is mounted on the opposite side of the board. No sharing of vias is permitted on the same side of the board.
(10) An HS bypass capacitor may share a via with a DDR device mounted on the same side of the PCB. A wide trace should be used for the connection and the length from the capacitor pad to the DDR device pad should be less than 150 mils.
(11) Up to a total of two pairs of DDR power/ground balls may share a via.

Copyright © 2011–2013, Texas Instruments Incorporated

8.13.4.2.4.6.1 Return Current Bypass Capacitors and Vias

If a power plane is used as a reference plane then additional bypass capacitors may be required to accommodate the signal return currents. Care should be taken to minimize the layer transitions during routing. If a layer transition is necessary, it is better to transition to a layer using the same reference plane. If this cannot be accommodated, ensure there is a nearby path to allow the return currents to transition between reference planes. Transitions from power reference planes to ground reference planes must go through a bypass capacitor. Transition between different ground references or DVDD_DDR planes can go through a connecting via. As many of these return current bypass capacitors or vias should be used as possible. The goal is to minimize the size of the return current loops. Generally, this type of situation happens where signals must transition from horizontal to vertical routing and vice-versa.

8.13.4.2.4.7 Net Classes

Table 8-73 lists the clock net classes for the DDR3 interface. Table 8-74 lists the signal net classes, and associated clock net classes, for signals in the DDR3 interface. These net classes are used for the termination and routing rules that follow.

Table 8-73. Clock Net Class Definitions

CLOCK NET CLASS	PROCESSOR PIN NAMES
CK	DDR[x]_CLK/$\overline{\text{DDR[x]_CLK}}$
DQS0	DDR[x]_DQS[0]/$\overline{\text{DDR[x]_DQS[0]}}$
DQS1	DDR[x]_DQS[1]/$\overline{\text{DDR[x]_DQS[1]}}$
DQS2 (1)	DDR[x]_DQS[2]/$\overline{\text{DDR[x]_DQS[2]}}$
DQS3 (1)	DDR[x]_DQS[3]/$\overline{\text{DDR[x]_DQS[3]}}$

(1) Only used on 32-bit wide DDR3 memory systems.

Table 8-74. Signal Net Class Definitions

CLOCK NET CLASS	ASSOCIATED CLOCK NET CLASS	PROCESSOR PIN NAMES
ADDR_CTRL	CK	DDR[x]_BA[2:0], DDR[x]_A[14:0], $\overline{\text{DDR[x]_CS[x]}}$, $\overline{\text{DDR[x]_CAS}}$, $\overline{\text{DDR[x]_RAS}}$, $\overline{\text{DDR[x]_WE}}$, DDR[x]_CKE, DDR[x]_ODT[x]
DQ0	DQS0	DDR[x]_D[7:0], DDR[x]_DQM[0]
DQ1	DQS1	DDR[x]_D[15:8], DDR[x]_DQM[1]
DQ2 (1)	DQS2	DDR[x]_D[23:16], DDR[x]_DQM[2]
DQ3 (1)	DQS3	DDR[x]_D[31:24], DDR[x]_DQM[3]

(1) Only used on 32-bit wide DDR3 memory systems.

8.13.4.2.4.8 DDR3 Signal Termination

Signal terminators are required for the CK and ADDR_CTRL net classes. The data lines are terminated by ODT and, thus, the PCB traces should be unterminated. Detailed termination specifications are covered in the routing rules in the following sections.

8.13.4.2.4.9 VREFSSTL_DDR Routing

VREFSSTL_DDR (VREF) is used as a reference by the input buffers of the DDR3 memories as well as the processor. VREF is intended to be half the DDR3 power supply voltage and is typically generated with the DDR3 1.5-V and VTT power supply. It should be routed as a nominal 20-mil wide trace with 0.1 µF bypass capacitors near each device connection. Narrowing of VREF is allowed to accommodate routing congestion.

Copyright © 2011–2013, Texas Instruments Incorporated

8.13.4.2.4.10 VTT

Like VREF, the nominal value of the VTT supply is half the DDR3 supply voltage. Unlike VREF, VTT is expected to source and sink current, specifically the termination current for the ADDR_CTRL net class Thevinen terminators. VTT is needed at the end of the address bus and it should be routed as a power sub-plane. VTT should be bypassed near the terminator resistors.

8.13.4.2.4.11 CK and ADDR_CTRL Topologies and Routing Definition

The CK and ADDR_CTRL net classes are routed similarly and are length matched to minimize skew between them. CK is a bit more complicated because it runs at a higher transition rate and is differential. The following subsections show the topology and routing for various DDR3 configurations for CK and ADDR_CTRL. Only the components shown in the topologies are allowed. Items such as test points and additional terminations are specifically disallowed. The figures in the following subsections define the terms for the routing specification detailed in Table 8-75.

Care should be taken to minimize layer transitions during routing. If a layer transition is necessary, it is better to transition to a layer using the same reference plane. If this cannot be accommodated, ensure there are nearby ground vias to allow the return currents to transition between reference planes if both reference planes are ground or DVDD_DDR. Ensure there are nearby bypass capacitors to allow the return currents to transition between reference planes if one of the reference planes is ground. The goal is to minimize the size of the return current loops.

8.13.4.2.4.11.1 Four DDR3 Devices

Four DDR3 devices are supported on the DDR EMIF consisting of four x8 DDR3 devices arranged as one bank (CS). These four devices may be mounted on a single side of the PCB, or may be mirrored in two pairs to save board space at a cost of increased routing complexity and parts on the backside of the PCB.

8.13.4.2.4.11.2 CK and ADDR_CTRL Topologies, Four DDR3 Devices

Figure 8-58 shows the topology of the CK net classes and Figure 8-59 shows the topology for the corresponding ADDR_CTRL net classes.

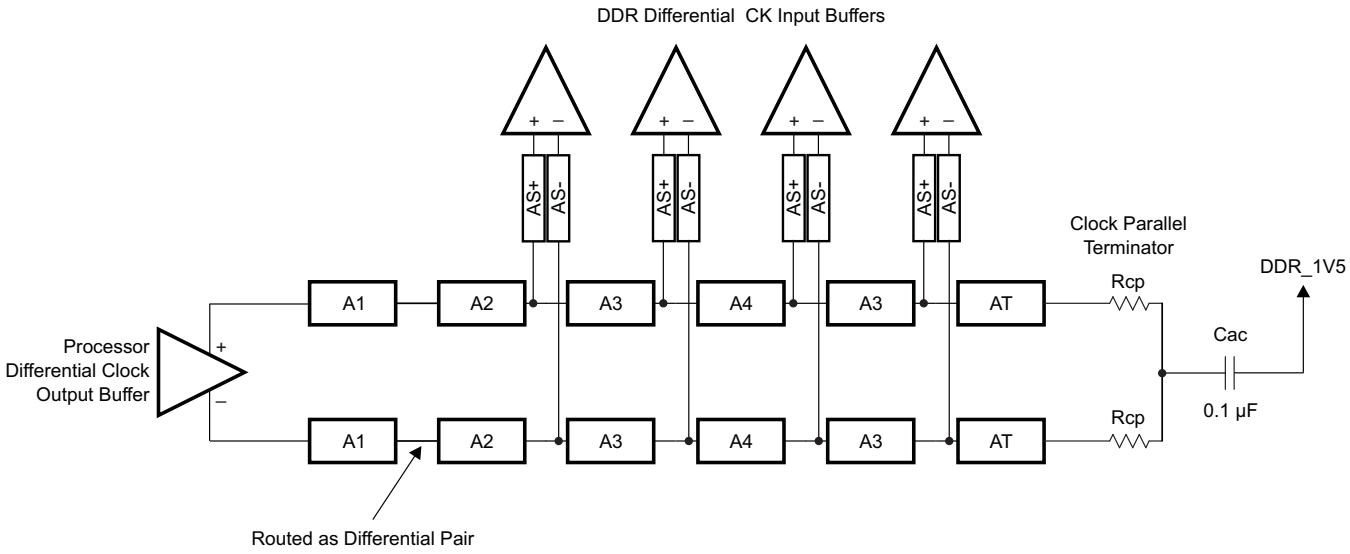

Figure 8-58. CK Topology for Four x8 DDR3 Devices

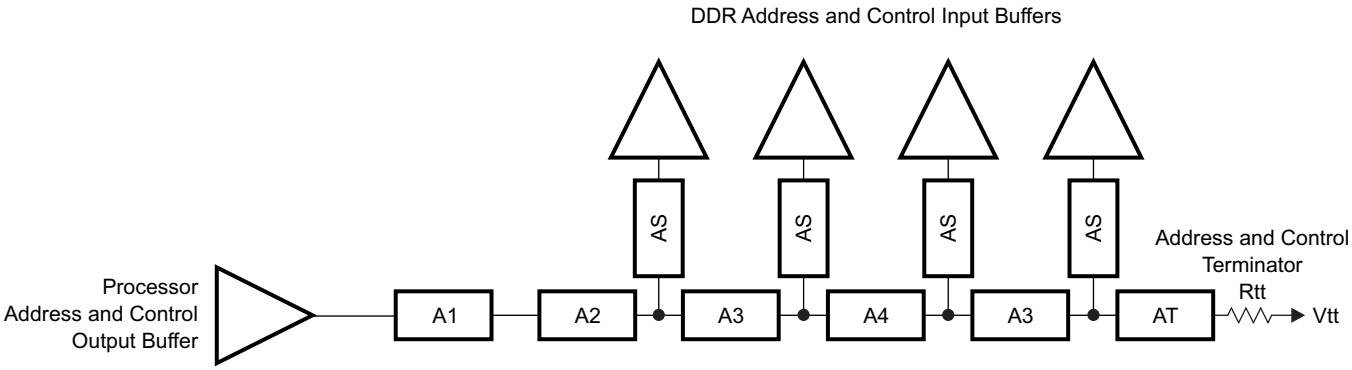

Figure 8-59. ADDR_CTRL Topology for Four x8 DDR3 Devices

8.13.4.2.4.11.3 CK and ADDR_CTRL Routing, Four DDR3 Devices

Figure 8-60 shows the CK routing for four DDR3 devices placed on the same side of the PCB. Figure 8-61 shows the corresponding ADDR_CTRL routing.

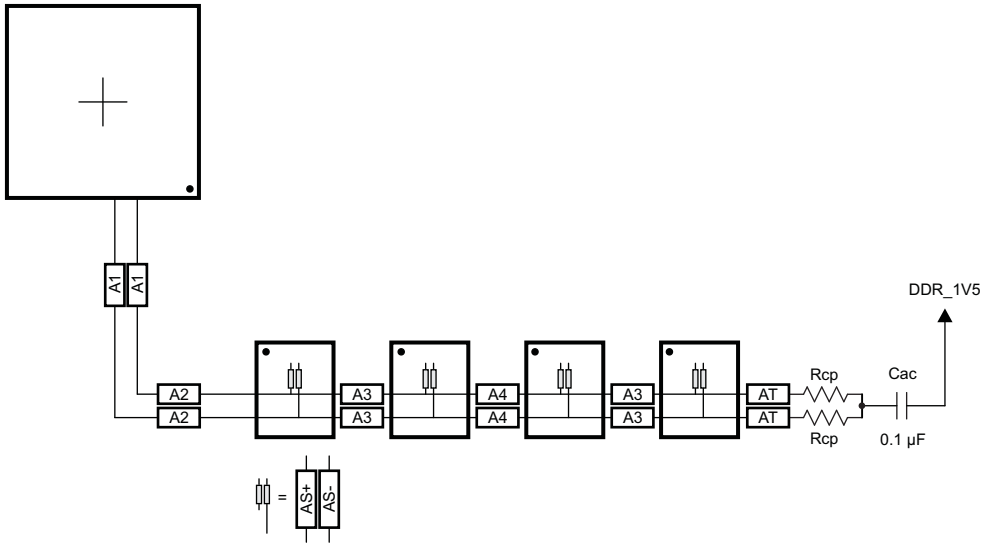

Figure 8-60. CK Routing for Four Single-Side DDR3 Devices

Copyright © 2011–2013, Texas Instruments Incorporated

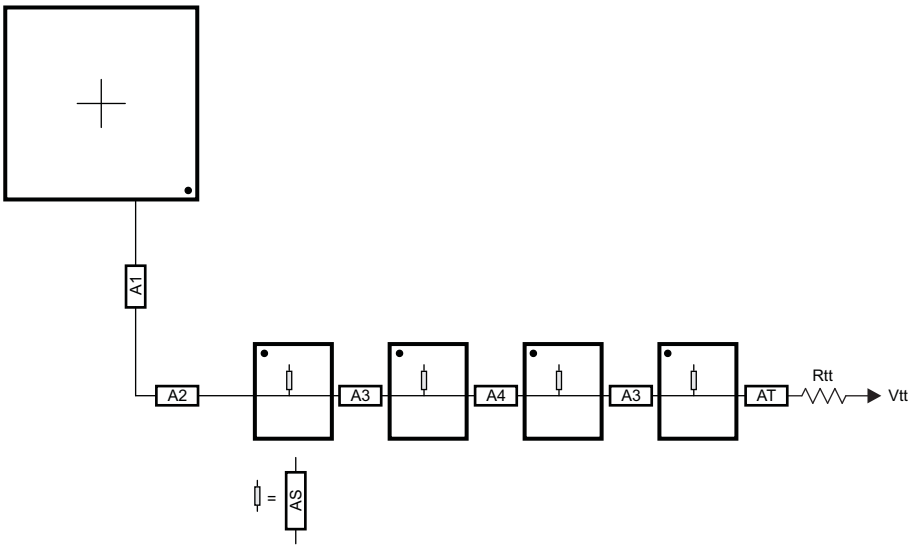

Figure 8-61. ADDR_CTRL Routing for Four Single-Side DDR3 Devices

To save PCB space, the four DDR3 memories may be mounted as two mirrored pairs at a cost of increased routing and assembly complexity. Figure 8-62 and Figure 8-63 show the routing for CK and ADDR_CTRL, respectively, for four DDR3 devices mirrored in a two-pair configuration.

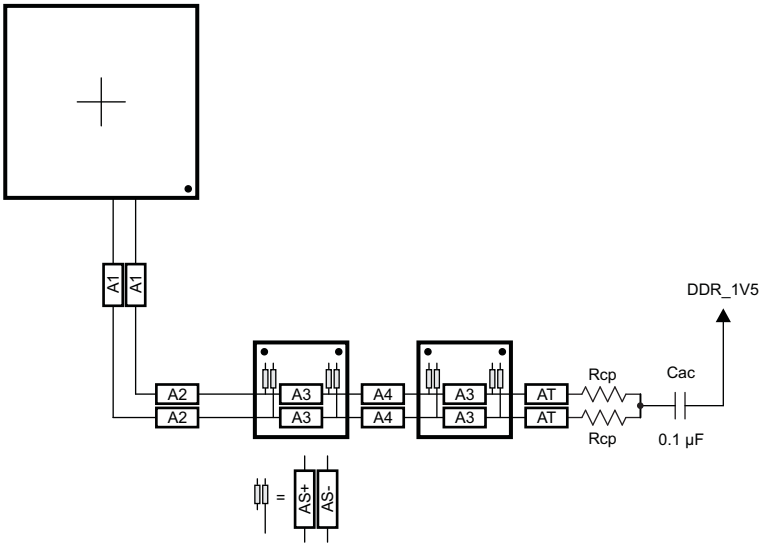

Figure 8-62. CK Routing for Four Mirrored DDR3 Devices

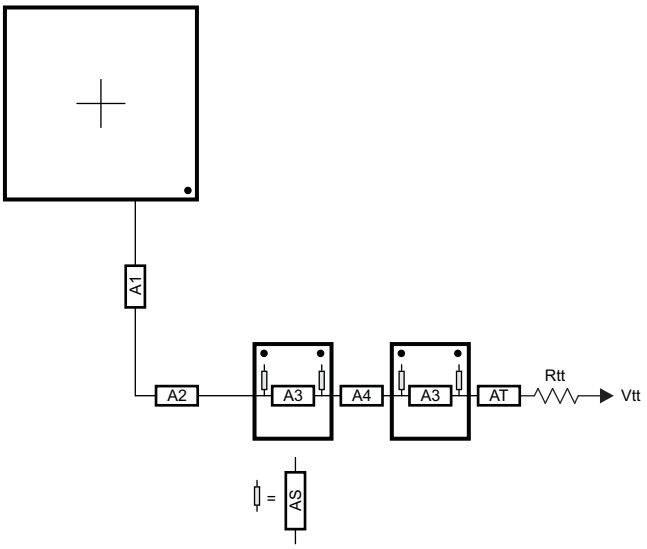

Figure 8-63. ADDR_CTRL Routing for Four Mirrored DDR3 Devices

8.13.4.2.4.11.4 Two DDR3 Devices

Two DDR3 devices are supported on the DDR EMIF consisting of two x8 DDR3 devices arranged as one bank (CS), 16-bits wide, or two x16 DDR3 devices arranged as one bank (CS), 32-bits wide. These two devices may be mounted on a single side of the PCB, or may be mirrored in a pair to save board space at a cost of increased routing complexity and parts on the backside of the PCB.

8.13.4.2.4.11.5 CK and ADDR_CTRL Topologies, Two DDR3 Devices

Figure 8-64 shows the topology of the CK net classes and Figure 8-65 shows the topology for the corresponding ADDR_CTRL net classes.

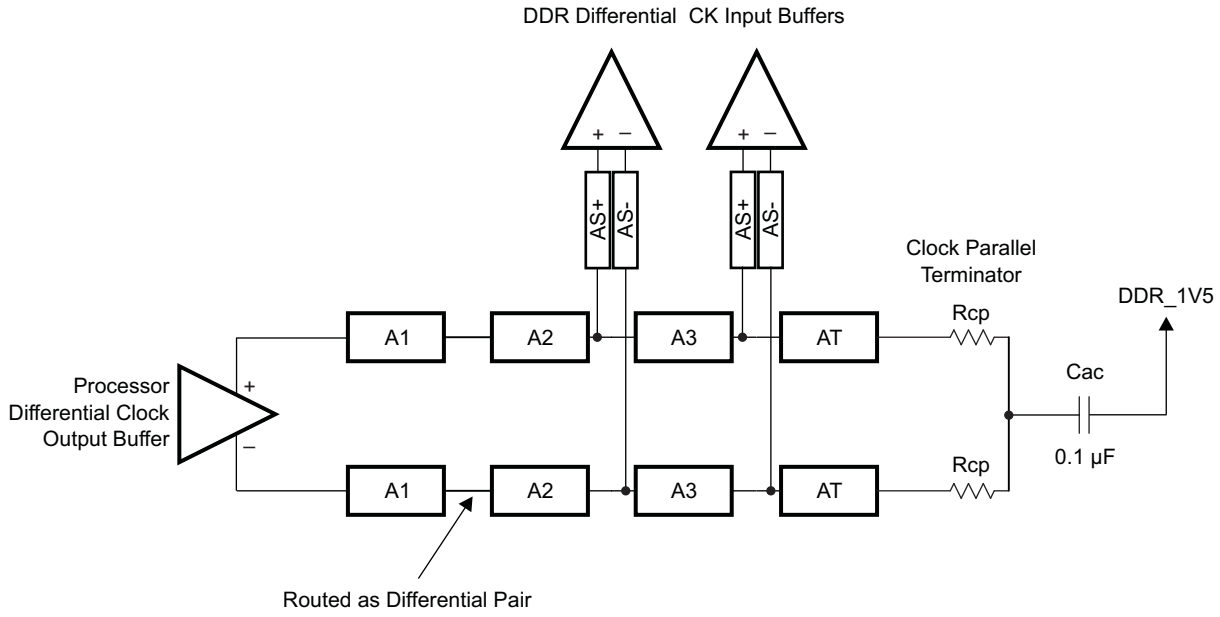

Figure 8-64. CK Topology for Two DDR3 Devices

Copyright © 2011–2013, Texas Instruments Incorporated

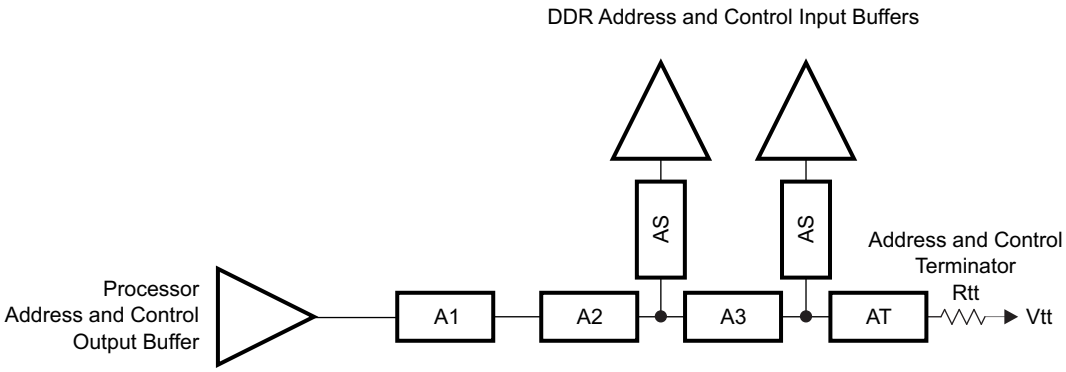

Figure 8-65. ADDR_CTRL Topology for Two DDR3 Devices

8.13.4.2.4.11.6 CK and ADDR_CTRL Routing, Two DDR3 Devices

Figure 8-66 shows the CK routing for two DDR3 devices placed on the same side of the PCB. Figure 8-67 shows the corresponding ADDR_CTRL routing.

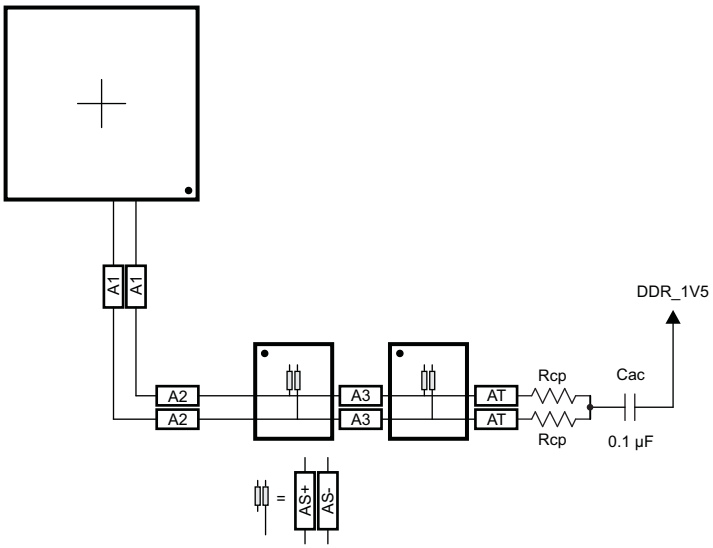

Figure 8-66. CK Routing for Two Single-Side DDR3 Devices

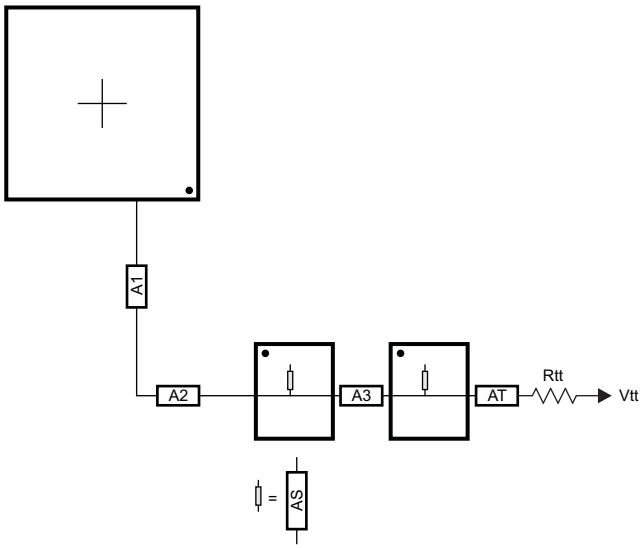

Figure 8-67. ADDR_CTRL Routing for Two Single-Side DDR3 Devices

To save PCB space, the two DDR3 memories may be mounted as a mirrored pair at a cost of increased routing and assembly complexity. Figure 8-68 and Figure 8-69 show the routing for CK and ADDR_CTRL, respectively, for two DDR3 devices mirrored in a single-pair configuration.

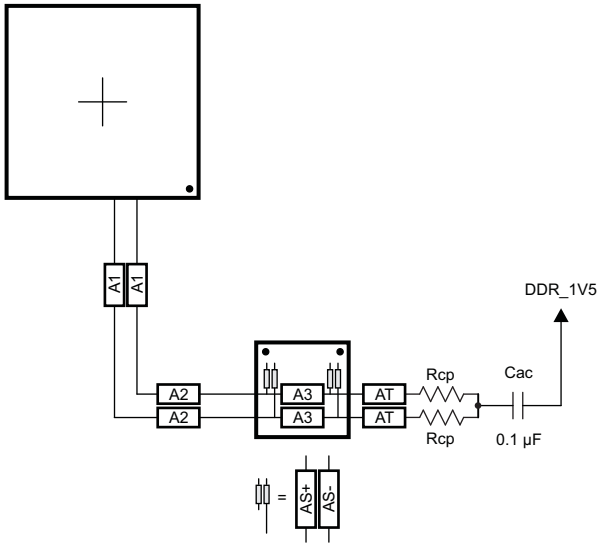

Figure 8-68. CK Routing for Two Mirrored DDR3 Devices

Copyright © 2011–2013, Texas Instruments Incorporated

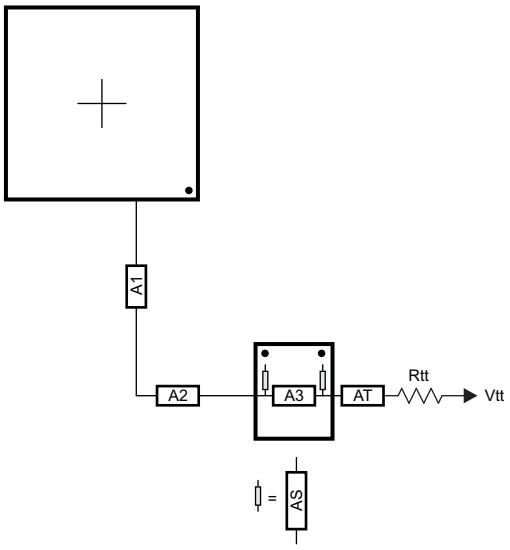

Figure 8-69. ADDR_CTRL Routing for Two Mirrored DDR3 Devices

8.13.4.2.4.11.7 One DDR3 Device

A single DDR3 device is supported on the DDR EMIF consisting of one x16 DDR3 device arranged as one bank (CS), 16-bits wide.

8.13.4.2.4.11.8 CK and ADDR_CTRL Topologies, One DDR3 Device

Figure 8-70 shows the topology of the CK net classes and Figure 8-71 shows the topology for the corresponding ADDR_CTRL net classes.

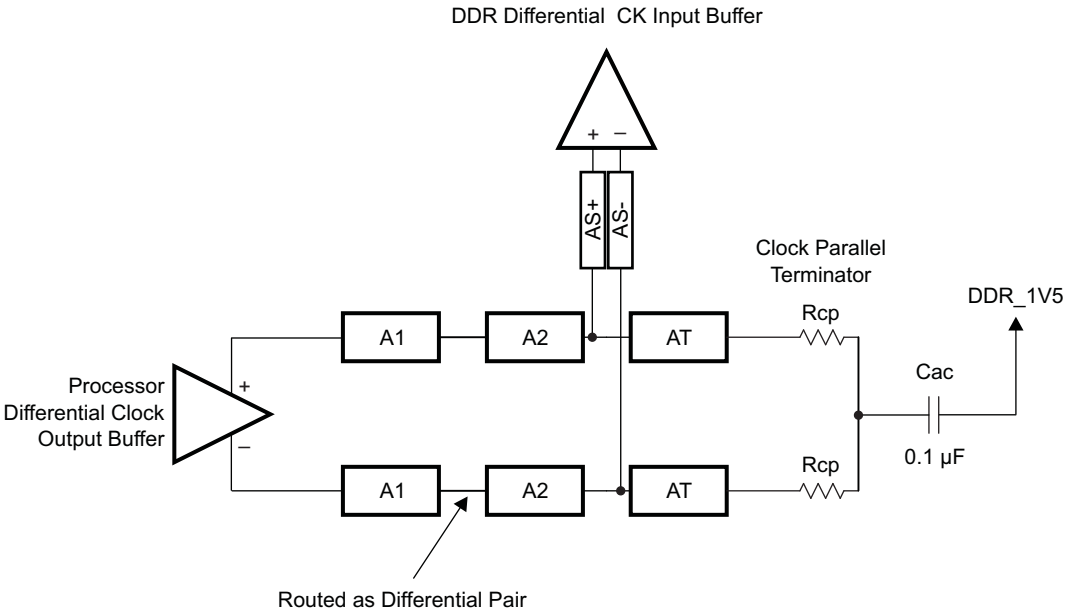

Figure 8-70. CK Topology for One DDR3 Device

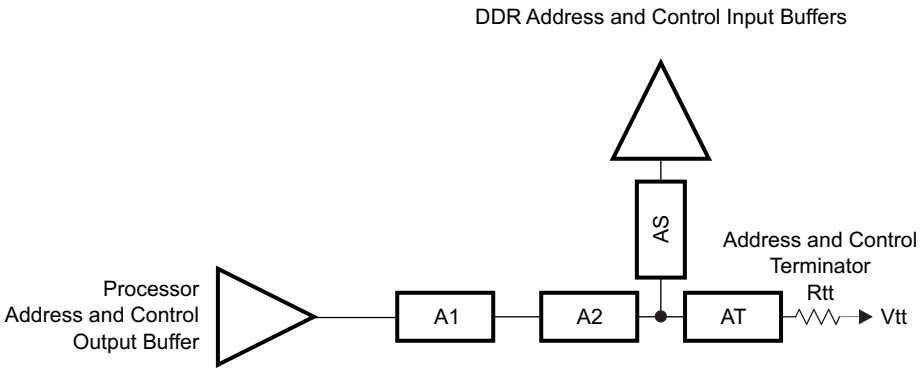

Figure 8-71. ADDR_CTRL Topology for One DDR3 Device

8.13.4.2.4.11.9 CK and ADDR/CTRL Routing, One DDR3 Device

Figure 8-72 shows the CK routing for one DDR3 device placed on the same side of the PCB. Figure 8-73 shows the corresponding ADDR_CTRL routing.

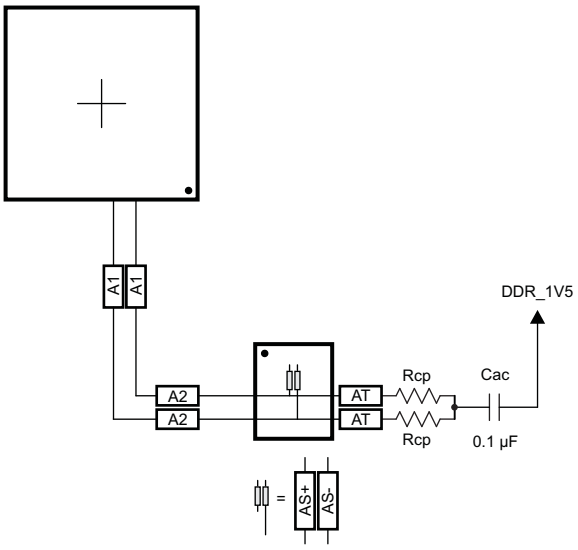

Figure 8-72. CK Routing for One DDR3 Device

Copyright © 2011–2013, Texas Instruments Incorporated

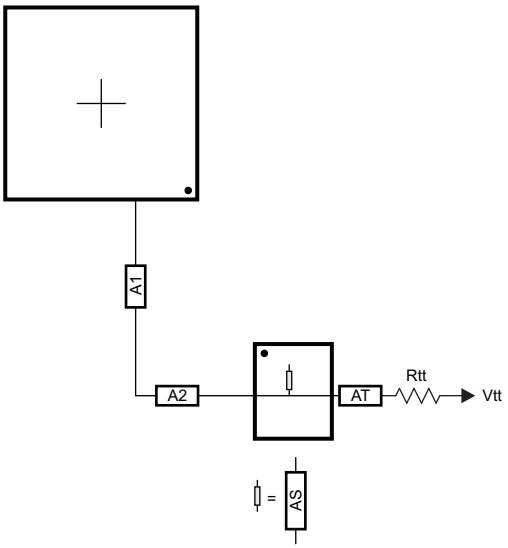

Figure 8-73. ADDR_CTRL Routing for One DDR3 Device

8.13.4.2.4.12 Data Topologies and Routing Definition

No matter the number of DDR3 devices used, the data line topology is always point-to-point, so its definition is simple.

Care should be taken to minimize layer transitions during routing. If a layer transition is necessary, it is better to transition to a layer using the same reference plane. If this cannot be accommodated, ensure there are nearby ground vias to allow the return currents to transition between reference planes if both reference planes are ground or DVDD_DDR. Ensure there are nearby bypass capacitors to allow the return currents to transition between reference planes if one of the reference planes is ground. The goal is to minimize the size of the return current loops.

8.13.4.2.4.12.1 DQS and DQ/DM Topologies, Any Number of Allowed DDR3 Devices

DQS lines are point-to-point differential, and DQ/DM lines are point-to-point singled ended. Figure 8-74 and Figure 8-75 show these topologies.

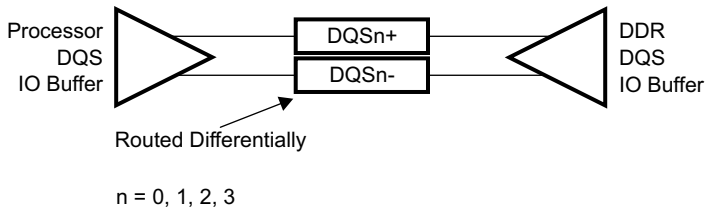

Figure 8-74. DQS Topology

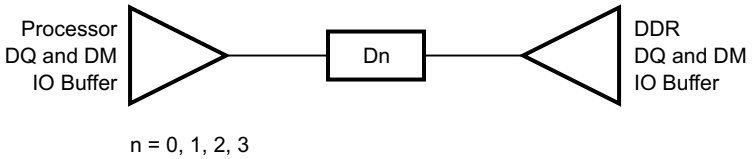

Figure 8-75. DQ/DM Topology

8.13.4.2.4.12.2 DQS and DQ/DM Routing, Any Number of Allowed DDR3 Devices

Figure 8-76 and Figure 8-77 show the DQS and DQ/DM routing.

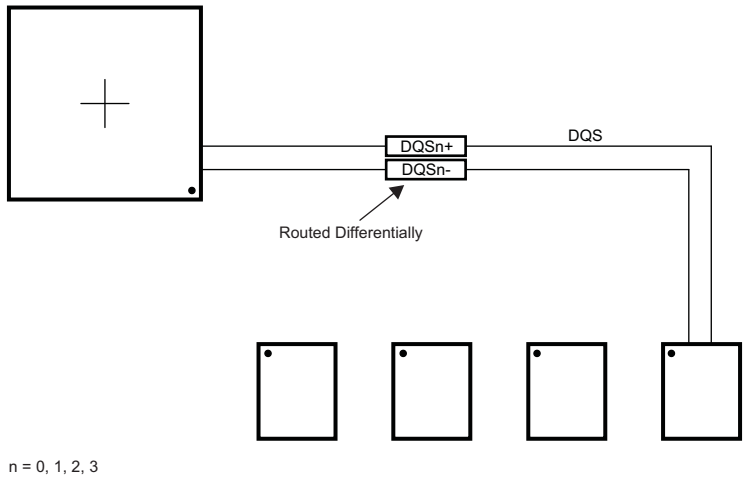

Figure 8-76. DQS Routing With Any Number of Allowed DDR3 Devices

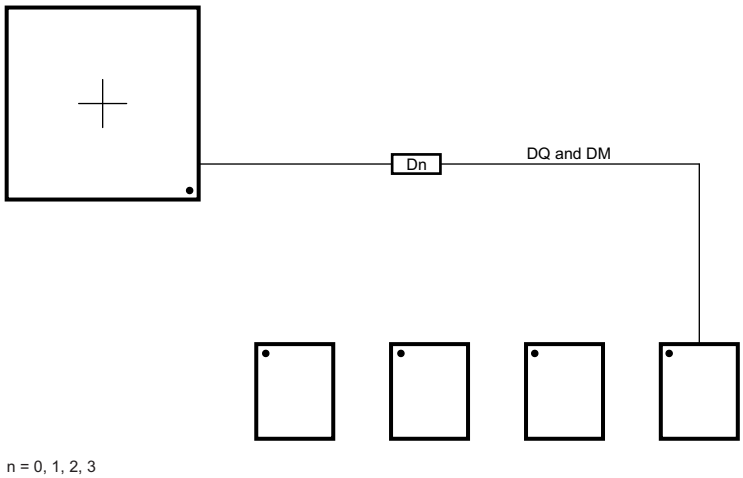

Figure 8-77. DQ/DM Routing With Any Number of Allowed DDR3 Devices

8.13.4.2.4.13 Routing Specification

8.13.4.2.4.13.1 CK and ADDR_CTRL Routing Specification

Skew within the CK and ADDR_CTRL net classes directly reduces setup and hold margin and, thus, this skew must be controlled. The only way to practically match lengths on a PCB is to lengthen the shorter traces up to the length of the longest net in the net class and its associated clock. A metric to establish this maximum length is Manhattan distance. The Manhattan distance between two points on a PCB is the length between the points when connecting them only with horizontal or vertical segments. A reasonable trace route length is to within a percentage of its Manhattan distance. CACLM is defined as Clock Address Control Longest Manhattan distance.

Given the clock and address pin locations on the processor and the DDR3 memories, the maximum possible Manhattan distance can be determined given the placement. Figure 8-78 and Figure 8-79 show this distance for four loads and two loads, respectively. It is from this distance that the specifications on the lengths of the transmission lines for the address bus are determined. CACLM is determined similarly for other address bus configurations; i.e., it is based on the longest net of the CK/ADDR_CTRL net class. For CK and ADDR_CTRL routing, these specifications are contained in Table 8-75.

Copyright © 2011–2013, Texas Instruments Incorporated

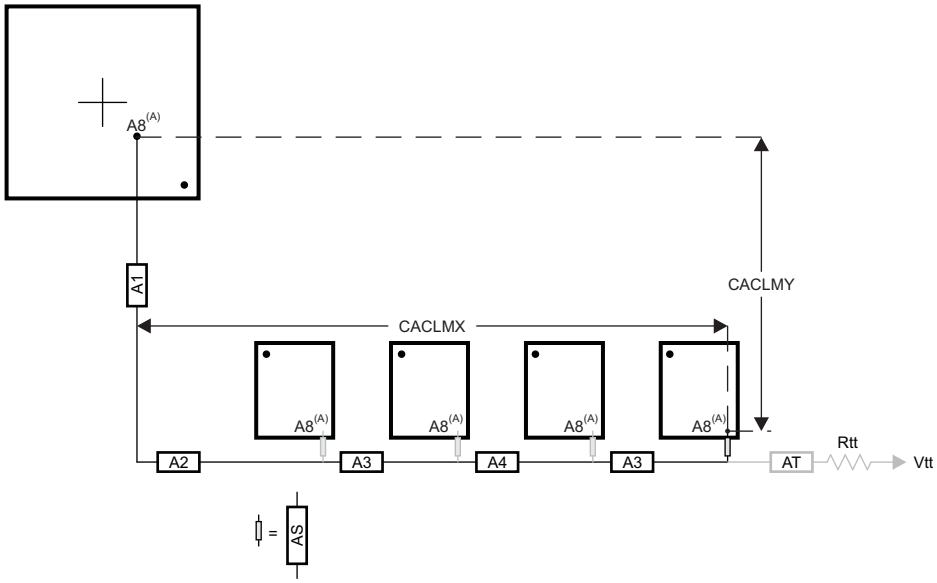

A. It is very likely that the longest CK/ADDR_CTRL Manhattan distance will be for Address Input 8 (A8) on the DDR3 memories. CACLM is based on the longest Manhattan distance due to the device placement. Verify the net class that satisfies this criteria and use as the baseline for CK/ADDR_CTRL skew matching and length control.

The length of shorter CK/ADDR_CTRL stubs as well as the length of the terminator stub are not included in this length calculation. Non-included lengths are grayed out in the figure.

Assuming A8 is the longest, CALM = CACLMY + CACLMX + 300 mils.
The extra 300 mils allows for routing down lower than the DDR3 memories and returning up to reach A8.

Figure 8-78. CACLM for Four Address Loads on One Side of PCB

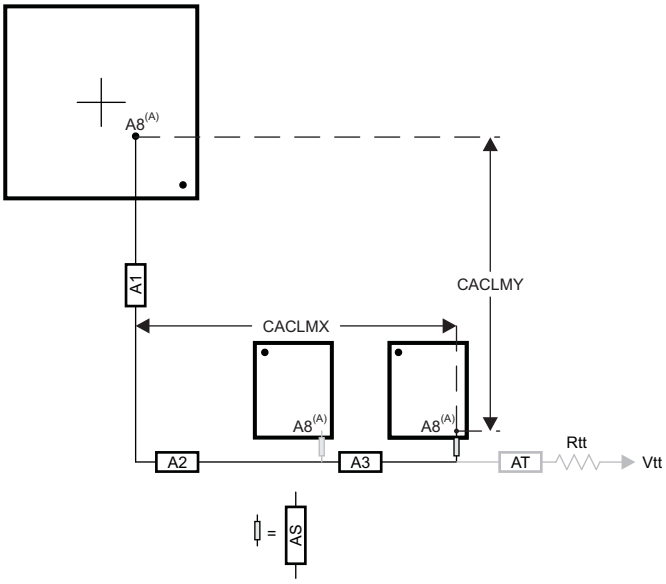

A. It is very likely that the longest CK/ADDR_CTRL Manhattan distance will be for Address Input 8 (A8) on the DDR3 memories. CACLM is based on the longest Manhattan distance due to the device placement. Verify the net class that satisfies this criteria and use as the baseline for CK/ADDR_CTRL skew matching and length control.

The length of shorter CK/ADDR_CTRL stubs as well as the length of the terminator stub are not included in this length calculation. Non-included lengths are grayed out in the figure.

Assuming A8 is the longest, CALM = CACLMY + CACLMX + 300 mils.
The extra 300 mils allows for routing down lower than the DDR3 memories and returning up to reach A8.

Figure 8-79. CACLM for Two Address Loads on One Side of PCB

Table 8-75. CK and ADDR_CTRL Routing Specification(1)(2)

NO.	PARAMETER	MIN	TYP	MAX	UNIT
1	A1+A2 length			2500	mils
2	A1+A2 skew			25	mils
3	A3 length			660	mils
4	A3 skew(3)			25	mils
5	A3 skew(4)			125	mils
6	A4 length			660	mils
7	A4 skew			25	mils
8	AS length			100	mils
9	AS skew			100	mils
10	AS+/AS- length			70	mils
11	AS+/AS- skew			5	mils
12	AT length(5)		500		mils
13	AT skew(6)		100		mils
14	AT skew(7)			5	mils
15	CK/ADDR_CTRL nominal trace length(8)	CACLM-50	CACLM	CACLM+50	mils
16	Center-to-center CK to other DDR3 trace spacing(9)	4w			
17	Center-to-center ADDR_CTRL to other DDR3 trace spacing(9)(10)	4w			
18	Center-to-center ADDR_CTRL to other ADDR_CTRL trace spacing(9)	3w			
19	CK center-to-center spacing(11)		(12)		
20	CK spacing to other net(9)	4w			
21	Rcp(13)	Zo-1	Zo	Zo+	Ω
22	Rtt(13)(14)	Zo-5	Zo	Zo+5	Ω

(1) The use of vias should be minimized.
(2) Additional bypass capacitors are required when using the DDR_1V5 plane as the reference plane to allow the return current to jump between the DDR_1V5 plane and the ground plane when the net class switches layers at a via.
(3) Non-mirrored configuration (all DDR3 memories on same side of PCB).
(4) Mirrored configuration (one DDR3 device on top of the board and one DDR3 device on the bottom).
(5) While this length can be increased for convenience, its length should be minimized.
(6) ADDR_CTRL net class only (not CK net class). Minimizing this skew is recommended, but not required.
(7) CK net class only.
(8) CACLM is the longest Manhattan distance of the CK and ADDR_CTRL net classes + 300 mils. For definition, see Section 8.13.4.2.4.13.1, Figure 8-78, and Figure 8-79.
(9) Center-to-center spacing is allowed to fall to minimum (w) for up to 1250 mils of routed length.
(10) The ADDR_CTRL net class of the other DDR EMIF is considered *other DDR3 trace spacing*.
(11) CK spacing set to ensure proper differential impedance.
(12) The most important thing to do is control the impedance so inadvertent impedance mismatches are not created. Generally speaking, center-to-center spacing should be either 2w or slightly larger than 2w to achieve a differential impedance equal to twice the single-ended impedance, Zo.
(13) Source termination (series resistor at driver) is specifically not allowed.
(14) Termination values should be uniform across the net class.

8.13.4.2.4.13.2 DQS and DQ Routing Specification

Skew within the DQS and DQ/DM net classes directly reduces setup and hold margin and thus this skew must be controlled. The only way to practically match lengths on a PCB is to lengthen the shorter traces up to the length of the longest net in the net class and its associated clock. As with CK and ADDR_CTRL, a reasonable trace route length is to within a percentage of its Manhattan distance. DQLMn is defined as DQ Longest Manhattan distance n, where n is the byte number. For a 32-bit interface, there are four DQLMs, DQLM0–DQLM3. Likewise, for a 16-bit interface, there are two DQLMs, DQLM0–DQLM1.

NOTE

It is not required, nor is it recommended, to match the lengths across all bytes. Length matching is only required within each byte.

Copyright © 2011–2013, Texas Instruments Incorporated

Given the DQS and DQ/DM pin locations on the processor and the DDR3 memories, the maximum possible Manhattan distance can be determined given the placement. Figure 8-80 shows this distance for four loads. It is from this distance that the specifications on the lengths of the transmission lines for the data bus are determined. For DQS and DQ/DM routing, these specifications are contained in Table 8-76.

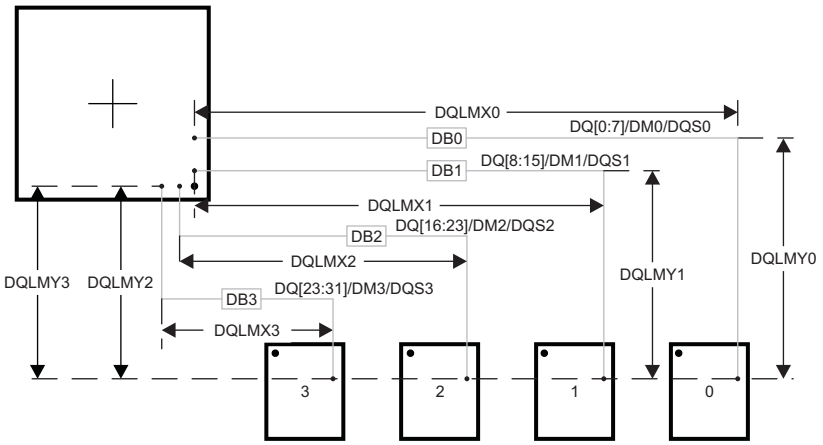

DB0 - DB3 represent data bytes 0 - 3.

There are four DQLMs, one for each byte (32-bit interface). Each DQLM is the longest Manhattan distance of the byte; therefore:
DQLM0 = DQLMX0 + DQLMY0
DQLM1 = DQLMX1 + DQLMY1
DQLM2 = DQLMX2 + DQLMY2
DQLM3 = DQLMX3 + DQLMY3

Figure 8-80. DQLM for Any Number of Allowed DDR3 Devices

Table 8-76. Data Routing Specification(1)

NO.	PARAMETER	MIN	TYP	MAX	UNIT
1	DB0 nominal length(2)(3)			DQLM0	mils
2	DB1 nominal length(2)(4)			DQLM1	mils
3	DB2 nominal length(2)(5)			DQLM2	mils
4	DB3 nominal length(2)(6)			DQLM3	mils
5	DBn skew(7)			25	mils
6	DQSn+ to DQSn- skew			5	mils
7	DQSn to DBn skew(7)(8)			25	mils
8	Center-to-center DBn to other DDR3 trace spacing(9)(10)	4w			
9	Center-to-center DBn to other DBn trace spacing(9)(11)	3w			
10	DQSn center-to-center spacing(12)		(13)		
11	DQSn center-to-center spacing to other net(9)	4w			

(1) External termination disallowed. Data termination should use built-in ODT functionality.
(2) DQLMn is the longest Manhattan distance of a byte. For definition, see Section 8.13.4.2.4.13.2 and Figure 8-80.
(3) DQLM0 is the longest Manhattan length for the net classes of Byte 0.
(4) DQLM1 is the longest Manhattan length for the net classes of Byte 1.
(5) DQLM2 is the longest Manhattan length for the net classes of Byte 2.
(6) DQLM3 is the longest Manhattan length for the net classes of Byte 3.
(7) Length matching is only done within a byte. Length matching across bytes is neither required nor recommended.
(8) Each DQS pair is length matched to its associated byte.
(9) Center-to-center spacing is allowed to fall to minimum (w) for up to 1250 mils of routed length.
(10) Other DDR3 trace spacing means other DDR3 net classes not within the byte.
(11) This applies to spacing within the net classes of a byte.
(12) DQS pair spacing is set to ensure proper differential impedance.
(13) The most important thing to do is control the impedance so inadvertent impedance mismatches are not created. Generally speaking, center-to-center spacing should be either 2w or slightly larger than 2w to achieve a differential impedance equal to twice the single-ended impedance, Zo.

Copyright © 2011–2013, Texas Instruments Incorporated

8.14 Multichannel Audio Serial Port (McASP)

The multichannel audio serial port (McASP) functions as a general-purpose audio serial port optimized for the needs of multichannel audio applications. The McASP is useful for time-division multiplexed (TDM) stream, Inter-Integrated Sound (I2S) protocols, and inter-component digital audio interface transmission (DIT).

8.14.1 McASP Device-Specific Information

The device includes six multichannel audio serial port (McASP) interface peripherals (McASP0, McASP1, McASP2, McASP3, McASP4, and McASP5). The McASP module consists of a transmit and receive section. On McASP0/1, these sections can operate completely independently with different data formats, separate master clocks, bit clocks, and frame syncs or, alternatively, the transmit and receive sections may be synchronized. On McASP2, McASP3, McASP4, and McASP5, the transmit and receive sections must always be synchronized. The McASP module also includes shift registers that may be configured to operate as either transmit data or receive data.

The transmit section of the McASP can transmit data in either a time-division-multiplexed (TDM) synchronous serial format or in a digital audio interface (DIT) format where the bit stream is encoded for S/PDIF, AES-3, IEC-60958, CP-430 transmission. The receive section of the McASP peripheral supports the TDM synchronous serial format.

The McASP module can support one transmit data format (either a TDM format or DIT format) and one receive format at a time. All transmit shift registers use the same format and all receive shift registers use the same format; however, the transmit and receive formats need not be the same. Both the transmit and receive sections of the McASP also support burst mode, which is useful for non-audio data (for example, passing control information between two devices).

The McASP peripheral has additional capability for flexible clock generation and error detection/handling, as well as error management.

The device McASP0 and McASP1 modules have up to 10 serial data pins, while McASP2, McASP3, McASP4, and McASP5 are limited to up to four serial data pins each. The McASP FIFO size is 256 bytes and two DMA and two interrupt requests are supported. Buffers are used transparently to better manage DMA, which can be leveraged to manage data flow more efficiently.

For more detailed information on and the functionality of the McASP peripheral, see the *Multichannel Audio Serial Port (McASP)* chapter of the *TMS320DM814x DaVinci Digital Media Processors Technical Reference Manual* (Literature Number: SPRUGZ8).

8.14.2 McASP0, McASP1, McASP2, McASP3, McASP4, and McASP5 Peripheral Registers Descriptions

Table 8-77. McASP0/1/2/3/4/5 Registers

HEX ADDRESS RANGE						ACRONYM	REGISTER NAME
MCASP0	MCASP1	MCASP2	MCASP3	MCASP4	MCASP5		
0x4803 8000	0x4803 C000	0x4805 0000	0x4A1A 2000	0x4A1A 8000	0x4A1A E000	PID	Peripheral ID
0x4803 8010	0x4803 C010	0x4805 0010	0x4A1A 2010	0x4A1A 8010	0x4A1A E010	PFUNC	Pin Function
0x4803 8014	0x4803 C014	0x4805 0014	0x4A1A 2014	0x4A1A 8014	0x4A1A E014	PDIR	Pin Direction
0x4803 8018	0x4803 C018	0x4805 0018	0x4A1A 2018	0x4A1A 8018	0x4A1A E018	PDOUT	Pin Data Out
0x4803 801C	0x4803 C01C	0x4805 001C	0x4A1A 201C	0x4A1A 801C	0x4A1A E01C	PDIN	Pin Data Input (Read) Read returns pin data input
						PDSET	Pin Data Set (Write) Writes effect pin data set (Alternate Write Address PDOUT)

Copyright © 2011–2013, Texas Instruments Incorporated

Table 8-77. McASP0/1/2/3/4/5 Registers (continued)

HEX ADDRESS RANGE						ACRONYM	REGISTER NAME
MCASP0	MCASP1	MCASP2	MCASP3	MCASP4	MCASP5		
0x4803 8020	0x4803 C020	0x4805 0020	0x4A1A 2020	0x4A1A 8020	0x4A1A E020	PDCLR	Pin Data Clear (Alternate Write Address PDOUT)
0x4803 8044	0x4803 C044	0x4805 0044	0x4A1A 2044	0x4A1A 8044	0x4A1A E044	GBLCTL	Global Control
0x4803 8048	0x4803 C048	0x4805 0048	0x4A1A 2048	0x4A1A 8048	0x4A1A E048	AMUTE	Mute Control
0x4803 804C	0x4803 C04C	0x4805 004C	0x4A1A 204C	0x4A1A 804C	0x4A1A E04C	LBCTL	Loop-Back Test Control
0x4803 8050	0x4803 C050	0x4805 0050	0x4A1A 2050	0x4A1A 8050	0x4A1A E050	TXDITCTL	Transmit DIT Mode Control
0x4803 8060	0x4803 C060	0x4805 0060	0x4A1A 2060	0x4A1A 8060	0x4A1A E060	GBLCTLR	Alias of GBLCTL containing only receiver reset bits; allows transmit to be reset independently from receive
0x4803 8064	0x4803 C064	0x4805 0064	0x4A1A 2064	0x4A1A 8064	0x4A1A E064	RXMASK	Receiver Bit Mask
0x4803 8068	0x4803 C068	0x4805 0068	0x4A1A 2068	0x4A1A 8068	0x4A1A E068	RXFMT	Receive Bitstream Format
0x4803 806C	0x4803 C06C	0x4805 006C	0x4A1A 206C	0x4A1A 806C	0x4A1A E06C	RXFMCTL	Receive Frame Sync Control
0x4803 8070	0x4803 C070	0x4805 0070	0x4A1A 2070	0x4A1A 8070	0x4A1A E070	ACLKRCTL	Receive Clock Control
0x4803 8074	0x4803 C074	0x4805 0074	0x4A1A 2074	0x4A1A 8074	0x4A1A E074	AHCLKRCTL	High Frequency Receive Clock Control
0x4803 8078	0x4803 C078	0x4805 0078	0x4A1A 2078	0x4A1A 8078	0x4A1A E078	RXTDM	Receive TDM Slot 0-31
0x4803 807C	0x4803 C07C	0x4805 007C	0x4A1A 207C	0x4A1A 807C	0x4A1A E07C	EVTCTLR	Receiver Interrupt Control
0x4803 8080	0x4803 C080	0x4805 0080	0x4A1A 2080	0x4A1A 8080	0x4A1A E080	RXSTAT	Status Receiver
0x4803 8084	0x4803 C084	0x4805 0084	0x4A1A 2084	0x4A1A 8084	0x4A1A E084	RXTDMSLOT	Current Receive TDM Slot
0x4803 8088	0x4803 C088	0x4805 0088	0x4A1A 2088	0x4A1A 8088	0x4A1A E088	RXCLKCHK	Receiver Clock Check Control
0x4803 808C	0x4803 C08C	0x4805 008C	0x4A1A 208C	0x4A1A 808C	0x4A1A E08C	REVTCTL	Receiver DMA Event Control
0x4803 80A0	0x4803 C0A0	0x4805 00A0	0x4A1A 20A0	0x4A1A 80A0	0x4A1A E0A0	GBLCTLX	Alias of GBLCTL containing only transmit reset bits; allows transmit to be reset independently from receive
0x4803 80A4	0x4803 C0A4	0x4805 00A4	0x4A1A 20A4	0x4A1A 80A4	0x4A1A E0A4	TXMASK	Transmit Format Unit Bit Mask
0x4803 80A8	0x4803 C0A8	0x4805 00A8	0x4A1A 20A8	0x4A1A 80A8	0x4A1A E0A8	TXFMT	Transmit Bitstream Format
0x4803 80AC	0x4803 C0AC	0x4805 00AC	0x4A1A 20AC	0x4A1A 80AC	0x4A1A E0AC	TXFMCTL	Transmit Frame Sync Control
0x4803 80B0	0x4803 C0B0	0x4805 00B0	0x4A1A 20B0	0x4A1A 80B0	0x4A1A E0B0	ACLKXCTL	Transmit Clock Control
0x4803 80B4	0x4803 C0B4	0x4805 00B4	0x4A1A 20B4	0x4A1A 80B4	0x4A1A E0B4	AHCLKXCTL	High Frequency Transmit Clock Control
0x4803 80B8	0x4803 C0B8	0x4805 00B8	0x4A1A 20B8	0x4A1A 80B8	0x4A1A E0B8	TXTDM	Transmit TDM Slot 0-31
0x4803 80BC	0x4803 C0BC	0x4805 00BC	0x4A1A 20BC	0x4A1A 80BC	0x4A1A E0BC	EVTCTLX	Transmitter Interrupt Control
0x4803 80C0	0x4803 C0C0	0x4805 00C0	0x4A1A 20C0	0x4A1A 80C0	0x4A1A E0C0	TXSTAT	Status Transmitter
0x4803 80C4	0x4803 C0C4	0x4805 00C4	0x4A1A 20C4	0x4A1A 80C4	0x4A1A E0C4	TXTDMSLOT	Current Transmit TDM Slot
0x4803 80C8	0x4803 C0C8	0x4805 00C8	0x4A1A 20C8	0x4A1A 80C8	0x4A1A E0C8	TXCLKCHK	Transmit Clock Check Control
0x4803 80CC	0x4803 C0CC	0x4805 00CC	0x4A1A 20CC	0x4A1A 80CC	0x4A1A E0CC	XEVTCTL	Transmitter DMA Control
0x4803 80D0	0x4803 C0D0	0x4805 00D0	0x4A1A 20D0	0x4A1A 80D0	0x4A1A E0D0	CLKADJEN	One-shot Clock Adjust Enable

Copyright © 2011–2013, Texas Instruments Incorporated

Table 8-77. McASP0/1/2/3/4/5 Registers (continued)

HEX ADDRESS RANGE						ACRONYM	REGISTER NAME
MCASP0	MCASP1	MCASP2	MCASP3	MCASP4	MCASP5		
0x4803 8100	0x4803 C100	0x4805 0100	0x4A1A 2100	0x4A1A 8100	0x4A1A E100	DITCSRA0	Left (Even TDM Slot) Channel Status Register File
0x4803 8104	0x4803 C104	0x4805 0104	0x4A1A 2104	0x4A1A 8104	0x4A1A E104	DITCSRA1	Left (Even TDM Slot) Channel Status Register File
0x4803 8108	0x4803 C108	0x4805 0108	0x4A1A 2108	0x4A1A 8108	0x4A1A E108	DITCSRA2	Left (Even TDM Slot) Channel Status Register File
0x4803 810C	0x4803 C10C	0x4805 010C	0x4A1A 210C	0x4A1A 810C	0x4A1A E10C	DITCSRA3	Left (Even TDM Slot) Channel Status Register File
0x4803 8110	0x4803 C110	0x4805 0110	0x4A1A 2110	0x4A1A 8110	0x4A1A E110	DITCSRA4	Left (Even TDM Slot) Channel Status Register File
0x4803 8114	0x4803 C114	0x4805 0114	0x4A1A 2114	0x4A1A 8114	0x4A1A E114	DITCSRA5	Left (Even TDM Slot) Channel Status Register File
0x4803 8118	0x4803 C118	0x4805 0118	0x4A1A 2118	0x4A1A 8118	0x4A1A E118	DITCSRB0	Right (Odd TDM Slot) Channel Status Register File
0x4803 811C	0x4803 C11C	0x4805 011C	0x4A1A 211C	0x4A1A 811C	0x4A1A E11C	DITCSRB1	Right (Odd TDM Slot) Channel Status Register File
0x4803 8120	0x4803 C120	0x4805 0120	0x4A1A 2120	0x4A1A 8120	0x4A1A E120	DITCSRB2	Right (Odd TDM Slot) Channel Status Register File
0x4803 8124	0x4803 C124	0x4805 0124	0x4A1A 2124	0x4A1A 8124	0x4A1A E124	DITCSRB3	Right (Odd TDM Slot) Channel Status Register File
0x4803 8128	0x4803 C128	0x4805 0128	0x4A1A 2128	0x4A1A 8128	0x4A1A E128	DITCSRB4	Right (Odd TDM Slot) Channel Status Register File
0x4803 812C	0x4803 C12C	0x4805 012C	0x4A1A 212C	0x4A1A 812C	0x4A1A E12C	DITCSRB5	Right (Odd TDM Slot) Channel Status Register File
0x4803 8130	0x4803 C130	0x4805 0130	0x4A1A 2130	0x4A1A 8130	0x4A1A E130	DITUDRA0	Left (Even TDM Slot) User Data Register File
0x4803 8134	0x4803 C134	0x4805 0134	0x4A1A 2134	0x4A1A 8134	0x4A1A E134	DITUDRA1	Left (Even TDM Slot) User Data Register File
0x4803 8138	0x4803 C138	0x4805 0138	0x4A1A 2138	0x4A1A 8138	0x4A1A E138	DITUDRA2	Left (Even TDM Slot) User Data Register File
0x4803 813C	0x4803 C13C	0x4805 013C	0x4A1A 213C	0x4A1A 813C	0x4A1A E13C	DITUDRA3	Left (Even TDM Slot) User Data Register File
0x4803 8140	0x4803 C140	0x4805 0140	0x4A1A 2140	0x4A1A 8140	0x4A1A E140	DITUDRA4	Left (Even TDM Slot) User Data Register File
0x4803 8144	0x4803 C144	0x4805 0144	0x4A1A 2144	0x4A1A 8144	0x4A1A E144	DITUDRA5	Left (Even TDM Slot) User Data Register File
0x4803 8148	0x4803 C148	0x4805 0148	0x4A1A 2148	0x4A1A 8148	0x4A1A E148	DITUDRB0	Right (Odd TDM Slot) User Data Register File
0x4803 814C	0x4803 C14C	0x4805 014C	0x4A1A 214C	0x4A1A 814C	0x4A1A E14C	DITUDRB1	Right (Odd TDM Slot) User Data Register File
0x4803 8150	0x4803 C150	0x4805 0150	0x4A1A 2150	0x4A1A 8150	0x4A1A E150	DITUDRB2	Right (Odd TDM Slot) User Data Register File
0x4803 8154	0x4803 C154	0x4805 0154	0x4A1A 2154	0x4A1A 8154	0x4A1A E154	DITUDRB3	Right (Odd TDM Slot) User Data Register File
0x4803 8158	0x4803 C158	0x4805 0158	0x4A1A 2158	0x4A1A 8158	0x4A1A E158	DITUDRB4	Right (Odd TDM Slot) User Data Register File
0x4803 815C	0x4803 C15C	0x4805 015C	0x4A1A 215C	0x4A1A 815C	0x4A1A E15C	DITUDRB5	Right (Odd TDM Slot) User Data Register File
0x4803 8180 - 0x4803 81BC	0x4803 C180 - 0x4803 C1BC	0x4805 0180 - 0x4805 01BC	0x4A1A 2180 - 0x4A1A 21BC	0x4A1A 8180 - 0x4A1A 81BC	0x4A1A E180 - 0x4A1A E1BC	XRSRCTL0 - XRSRCTL15	Serializer 0 Control - Serializer 15 Control
0x4803 8200 - 0x4803 8 23C	0x4803 C200 - 0x4803 C23C	0x4805 0200 - 0x4805 023C	0x4A1A 2200 - 0x4A1A 223C	0x4A1A 8200 - 0x4A1A 823C	0x4A1A E200 - 0x4A1A E23C	TXBUF0 - TXBUF15	Transmit Buffer for Serializer 0 - Transmit Buffer for Serializer 15

Copyright © 2011–2013, Texas Instruments Incorporated

Table 8-77. McASP0/1/2/3/4/5 Registers (continued)

HEX ADDRESS RANGE						ACRONYM	REGISTER NAME
MCASP0	MCASP1	MCASP2	MCASP3	MCASP4	MCASP5		
0x4803 8280 - 0x4803 82BC	0x4803 C280 - 0x4803 C2BC	0x4805 0280 - 0x4805 02BC	0x4A1A 2280 - 0x4A1A 22BC	0x4A1A 8280 - 0x4A1A 82BC	0x4A1A E280 - 0x4A1A E2BC	RXBUF0 - RXBUF15	Receive Buffer for Serializer 0 - Receive Buffer for Serializer 15
0x4803 9000	0x4803 D000	0x4805 1000	0x4A1A 3000	0x4A1A 9000	0x4A1A F000	BUFFER_CFGRD_WFIFOCTL	Write FIFO Control
0x4803 9004	0x4803 D004	0x4805 1004	0x4A1A 3004	0x4A1A 9004	0x4A1A F004	BUFFER_CFGRD_WFIFOSTS	Write FIFO Status
0x4803 9008	0x4803 D008	0x4805 1008	0x4A1A 3008	0x4A1A 9008	0x4A1A F008	BUFFER_CFGRD_RFIFOCTL	Read FIFO Control
0x4803 900C	0x4803 D00C	0x4805 100C	0x0A1A 300C	0x0A1A 900C	0x0A1A F00C	BUFFER_CFGRD_RFIFOSTS	Read FIFO Status
0x4803 9010 - 0x4803 9FFF	0x4803 D010 - 0x4803 DFFF	0x4805 1010 - 0x4805 1FFF	0x4A1A 3010 - 0x4A1A 3FFF	0x4A1A 9010 - 0x4A1A 9FFF	0x4A1A F010 - 0x4A1A FFFF	–	Reserved

8.14.3 McASP (McASP[5:0]) Electrical Data/Timing

Table 8-78. Timing Requirements for McASP[(1)]

(see Figure 8-81)

NO.				OPP100/120/166				UNIT
				McASP[5:2,0] Only		McASP1 Only		
				MIN	MAX	MIN	MAX	
1	$t_{c(AHCLKRX)}$	Cycle time, MCA[x]_AHCLKR/X		20		20		ns
2	$t_{w(AHCLKRX)}$	Pulse duration, MCA[x]_AHCLKR/X high or low		0.5P - 3[(2)]		0.5P - 3[(2)]		ns
3	$t_{c(ACLKRX)}$	Cycle time, MCA[x]_ACLKR/X	Any Other Conditions	20		20		ns
			ACLKx, AFSX and AXR are all inputs	–		12.5		ns
4	$t_{w(ACLKRX)}$	Pulse duration, MCA[x]_ACLKR/X high or low	Any Other Conditions	0.5R - 3[(3)]		0.5R - 3[(3)]		ns
			ACLKx, AFSX and AXR are all inputs	–		0.5R - 1.5[(3)]		ns
5	$t_{su(AFSRX-ACLKRX)}$	Setup time, MCA[x]_AFSR/X input valid before MCA[X]_ACLKR/X	ACLKR/X int	10.5		10.5		ns
			ACLKR/X ext in	4		2		
			ACLKR/X ext out	4		2		
6	$t_{h(ACLKRX-AFSRX)}$	Hold time, MCA[x]_AFSR/X input valid after MCA[X]_ACLKR/X	ACLKR/X int	-1		-1		ns
			ACLKR/X ext in	1		2		
			ACLKR/X ext out	1		2		
7	$t_{su(AXR-ACLKRX)}$	Setup time, MCA[x]_AXR input valid before MCA[X]_ACLKR/X	ACLKR/X int	10.5		10.5		ns
			ACLKR/X ext in	4		2		
			ACLKR/X ext out	4		2		
8	$t_{h(ACLKRX-AXR)}$	Hold time, MCA[x]_AXR input valid after MCA[X]_ACLKR/X	ACLKR/X int	-1		-1		ns
			ACLKR/X ext in	1		2		
			ACLKR/X ext out	1		2		

(1) ACLKR internal: ACLKRCTL.CLKRM=1, PDIR.ACLKR = 1
ACLKR external input: ACLKRCTL.CLKRM=0, PDIR.ACLKR=0
ACLKR external output: ACLKRCTL.CLKRM=0, PDIR.ACLKR=1
ACLKX internal: ACLKXCTL.CLKXM=1, PDIR.ACLKX = 1
ACLKX external input: ACLKXCTL.CLKXM=0, PDIR.ACLKX=0
ACLKX external output: ACLKXCTL.CLKXM=0, PDIR.ACLKX=1
(2) P = MCA[x]_AHCLKR/X period in nano seconds (ns).
(3) R = MCA[x]_ACLKR/X period in ns.

Copyright © 2011–2013, Texas Instruments Incorporated

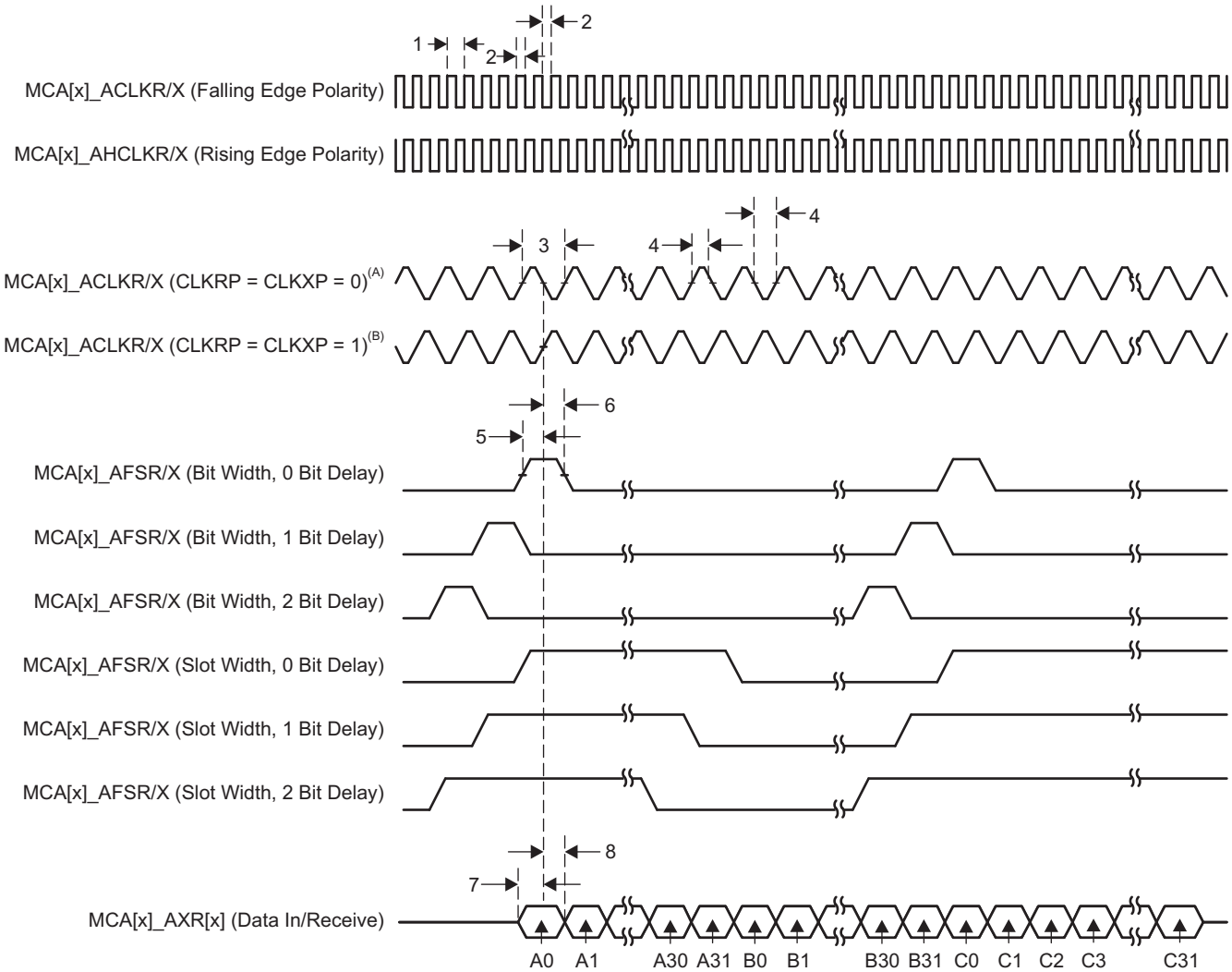

A. For CLKRP = CLKXP = 0, the McASP transmitter is configured for rising edge (to shift data out) and the McASP receiver is configured for falling edge (to shift data in).

B. For CLKRP = CLKXP = 1, the McASP transmitter is configured for falling edge (to shift data out) and the McASP receiver is configured for rising edge (to shift data in).

Figure 8-81. McASP Input Timing

Table 8-79. Switching Characteristics Over Recommended Operating Conditions for McASP[1]

(see Figure 8-82)

NO.	PARAMETER			OPP100/120/166		UNIT
				MIN	MAX	
9	$t_{c(AHCLKRX)}$	Cycle time, MCA[X]_AHCLKR/X		20[2]		ns
10	$t_{w(AHCLKRX)}$	Pulse duration, MCA[X]_AHCLKR/X high or low		0.5P - 2.5[3]		ns
11	$t_{c(ACLKRX)}$	Cycle time, MCA[X]_ACLKR/X		20		ns
12	$t_{w(ACLKRX)}$	Pulse duration, MCA[X]_ACLKR/X high or low		0.5P - 2.5[3]		ns
13	$t_{d(ACLKRX-AFSRX)}$	Delay time, MCA[X]_ACLKR/X transmit edge to MCA[X]_AFSR/X output valid	ACLKR/X int	-2	5	ns
			ACLKR/X ext in	1	11.5	
		Delay time, MCA[X]_ACLKR/X transmit edge to MCA[X]_AFSR/X output valid with Pad Loopback	ACLKR/X ext out	1	11.5	
14	$t_{d(ACLKX-AXR)}$	Delay time, MCA[X]_ACLKX transmit edge to MCA[X]_AXR output valid	ACLKX int	-2	5	ns
			ACLKX ext in	1	11.5	
		Delay time, MCA[X]_ACLKX transmit edge to MCA[X]_AXR output valid with Pad Loopback	ACLKX ext out	1	11.5	
15	$t_{dis(ACLKX-AXR)}$	Disable time, MCA[X]_ACLKX transmit edge to MCA[X]_AXR output high impedance	ACLKX int	-2	5	ns
			ACLKX ext in	1	11.5	
		Disable time, MCA[X]_ACLKX transmit edge to MCA[X]_AXR output high impedance with Pad Loopback	ACLKX ext out	1	11.5	

(1) ACLKR internal: ACLKRCTL.CLKRM=1, PDIR.ACLKR = 1
ACLKR external input: ACLKRCTL.CLKRM=0, PDIR.ACLKR=0
ACLKR external output: ACLKRCTL.CLKRM=0, PDIR.ACLKR=1
ACLKX internal: ACLKXCTL.CLKXM=1, PDIR.ACLKX = 1
ACLKX external input: ACLKXCTL.CLKXM=0, PDIR.ACLKX=0
ACLKX external output: ACLKXCTL.CLKXM=0, PDIR.ACLKX=1
(2) 50 MHz
(3) P = AHCLKR/X period.

Copyright © 2011–2013, Texas Instruments Incorporated

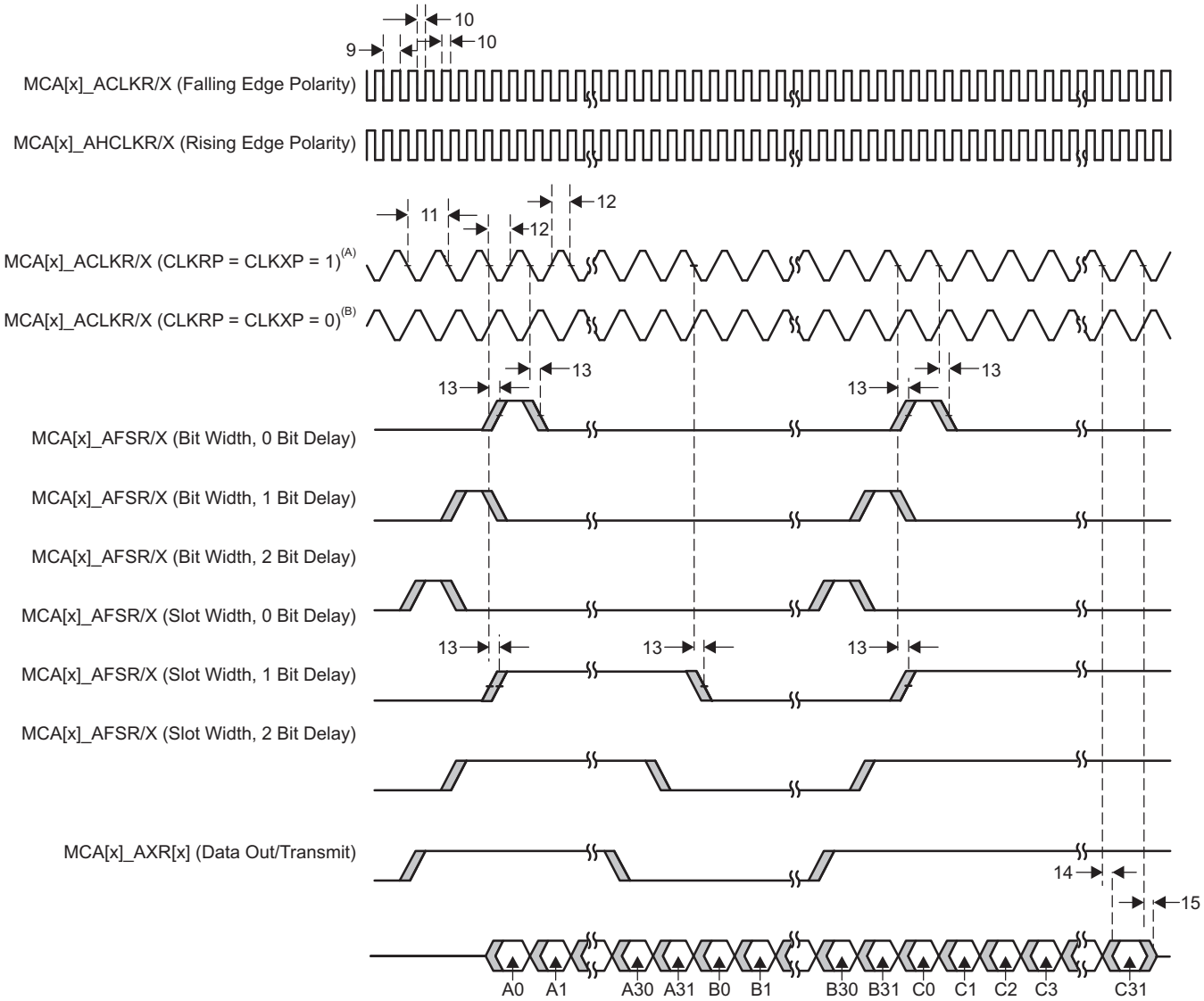

A. For CLKRP = CLKXP = 1, the McASP transmitter is configured for falling edge (to shift data out) and the McASP receiver is configured for rising edge (to shift data in).

B. For CLKRP = CLKXP = 0, the McASP transmitter is configured for rising edge (to shift data out) and the McASP receiver is configured for falling edge (to shift data in).

Figure 8-82. McASP Output Timing

8.15 Multichannel Buffered Serial Port (McBSP)

The McBSP provides these functions:

- Full-duplex communication
- Double-buffered data registers, which allow a continuous data stream
- Independent framing and clocking for receive and transmit
- Direct interface to industry-standard codecs, analog interface chips (AICs), and other serially connected analog-to-digital (A/D) and digital-to-analog (D/A) devices
- Supports TDM, I2S, and similar formats
- External shift clock or an internal, programmable frequency shift clock for data transfer
- 5KB Tx and Rx buffer
- Supports three interrupt and two DMA requests.

The McBSP module may support two types of data transfer at the system level:

- The full-cycle mode, for which one clock period is used to transfer the data, generated on one edge and captured on the same edge (one clock period later).
- The half-cycle mode, for which one half clock period is used to transfer the data, generated on one edge and captured on the opposite edge (one half clock period later). Note that a new data is generated only every clock period, which secures the required hold time. The interface clock (CLKX/CLKR) activation edge (data/frame sync capture and generation) has to be configured accordingly with the external peripheral (activation edge capability) and the type of data transfer required at the system level.

For more detailed information on the McBSP peripheral, see the *Multichannel Buffered Serial Port (McBSP)* chapter of the *TMS320DM814x DaVinci Digital Media Processors Technical Reference Manual* (Literature Number: SPRUGZ8).

The following sections describe the timing characteristics for applications in normal mode (that is, the McBSP connected to one peripheral) and TDM applications in multipoint mode.

8.15.1 McBSP Peripheral Register Descriptions

Table 8-80. McBSP Registers(1)

HEX ADDRESS	ACRONYM	REGISTER NAME
0x4700 0000	REVNB	Revision Number Register
0x4700 0010	SYSCONFIG_REG	System Configuration Register
0x4700 0020	EOI	End of Interrupt Register
0x4700 0024	IRQSTATUS_RAW	Interrupt Status Raw Register
0x4700 0028	IRQSTATUS	Interrupt Status Register
0x4700 002C	IRQENABLE_SET	Interrupt Enable Set Register
0x4700 0030	IRQENABLE_CLR	Interrupt Enable Clear Register
0x4700 0034	DMARXENABLE_SET	DMA Rx Enable Set Register
0x4700 0038	DMATXENABLE_SET	DMA Tx Enable Set Register
0x4700 003C	DMARXENABLE_CLR	DMA Rx Enable Clear Register
0x4700 0040	DMATXENABLE_CLR	DMA Tx Enable Clear Register
0x4700 0048	DMARXWAKE_EN	DMA Rx Wake Enable Register
0x4700 004C	DMATXWAKE_EN	DMA Tx Wake Enable Register
0x4700 0100	DRR_REG	McBSP data receive
0x4700 0108	DXR_REG	McBSP data transmit
0x4700 0110	SPCR2_REG	McBSP serial port control 2
0x4700 0114	SPCR1_REG	McBSP serial port control 1

(1) Note that the McBSP registers are 32-bit aligned.

Copyright © 2011–2013, Texas Instruments Incorporated

Table 8-80. McBSP Registers[(1)] (continued)

HEX ADDRESS	ACRONYM	REGISTER NAME
0x4700 0118	RCR2_REG	McBSP receive control 2
0x4700 011C	RCR1_REG	McBSP receive control 1
0x4700 0120	XCR2_REG	McBSP transmit control 2
0x4700 0124	XCR1_REG	McBSP transmit control 1
0x4700 0128	SRGR2_REG	McBSP sample rate generator 2
0x4700 012C	SRGR1_REG	McBSP sample rate generator 1
0x4700 0130	MCR2_REG	McBSP multichannel 2
0x4700 0134	MCR1_REG	McBSP multichannel 1
0x4700 0138	RCERA_REG	McBSP receive channel enable partition A
0x4700 013C	RCERB_REG	McBSP receive channel enable partition B
0x4700 0140	XCERA_REG	McBSP transmit channel enable partition A
0x4700 0144	XCERB_REG	McBSP transmit channel enable partition B
0x4700 0148	PCR_REG	McBSP pin control
0x4700 014C	RCERC_REG	McBSP receive channel enable partition C
0x4700 0150	RCERD_REG	McBSP receive channel enable partition D
0x4700 0154	XCERC_REG	McBSP transmit channel enable partition C
0x4700 0158	XCERD_REG	McBSP transmit channel enable partition D
0x4700 015C	RCERE_REG	McBSP receive channel enable partition E
0x4700 0160	RCERF_REG	McBSP receive channel enable partition F
0x4700 0164	XCERE_REG	McBSP transmit channel enable partition E
0x4700 0168	XCERF_REG	McBSP transmit channel enable partition F
0x4700 016C	RCERG_REG	McBSP receive channel enable partition G
0x4700 0170	RCERH_REG	McBSP receive channel enable partition H
0x4700 0174	XCERG_REG	McBSP transmit channel enable partition G
0x4700 0178	XCERH_REG	McBSP transmit channel enable partition H
0x4700 017C	REV_REG	McBSP revision number
0x4700 0180	RINTCLR_REG	McBSP receive interrupt clear
0x4700 0184	XINTCLR_REG	McBSP transmit interrupt clear
0x4700 0188	ROVFLCLR_REG	McBSP receive overflow interrupt clear
0x4700 018C	SYSCONFIG_REG	McBSP system configuration
0x4700 0190	THRSH2_REG	McBSP transmit buffer threshold (DMA or IRQ trigger)
0x4700 0194	THRSH1_REG	McBSP receive buffer threshold (DMA or IRQ trigger)
0x4700 01A0	IRQSTATATUS	McBSP interrupt status (OCP compliant IRQ line)
0x4700 01A4	IRQENABLE	McBSP interrupt enable (OCP compliant IRQ line)
0x4700 01A8	WAKEUPEN	McBSP wakeup enable
0x4700 01AC	XCCR_REG	McBSP transmit configuration control
0x4700 01B0	RCCR_REG	McBSP receive configuration control
0x4700 01B4	XBUFFSTAT_REG	McBSP transmit buffer status
0x4700 01B8	RBUFFSTAT_REG	McBSP receive buffer status
0x4700 01C0	STATUS_REG	McBSP status

8.15.2 McBSP Electrical Data/Timing

Table 8-81. Timing Requirements for McBSP - Master Mode(1)

(see Figure 8-83)

NO.			OPP100/120/166		UNIT
			MIN	MAX	
6	$t_{su(DRV-CLKAE)}$	Setup time, MCB_DR valid before MCB_CLK active edge(2)	3.5		ns
7	$t_{h(CLKAE-DRV)}$	Hold time, MCB_DR valid after MCB_CLK active edge(2)	3.5		ns

(1) The timings apply to all configurations regardless of MCB_CLK polarity and which clock edges are used to drive output data and capture input data.
(2) MCB_CLK corresponds to either MCB_CLKX or MCB_CLKR.

Table 8-82. Switching Characteristics Over Recommended Operating Conditions for McBSP - Master Mode(1)

(see Figure 8-83)

NO.	PARAMETER		OPP100/120/166		UNIT
			MIN	MAX	
1	$t_{c(CLK)}$	Cycle time, output MCB_CLK period(2)	20.83		ns
2	$t_{w(CLKL)}$	Pulse duration, output MCB_CLK low(2)	0.5*P - 1(3)		ns
3	$t_{w(CLKH)}$	Pulse duration, output MCB_CLK high(2)	0.5*P - 1(3)		ns
4	$t_{d(CLKAE-FSV)}$	Delay time, output MCB_CLK active edge to output MCB_FS valid(2)(4)	0.3	9.4	ns
5	$t_{d(CLKXAE-DXV)}$	Delay time, output MCB_CLKX active edge to output MCB_DX valid	0.3	9.4	ns

(1) The timings apply to all configurations regardless of MCB_CLK polarity and which clock edges are used to drive output data and capture input data.
(2) MCB_CLK corresponds to either MCB_CLKX or MCB_CLKR.
(3) P = MCB_CLKX/MCB_CLKR output CLK period, in ns; use whichever value is greater. This parameter applies to the maximum McBSP frequency. Operate serial clocks (CLKX/R) in the reasonable range of 40/60 duty cycle.
(4) MCB_FS corresponds to either MCB_FSX or MCB_FSR.

Copyright © 2011–2013, Texas Instruments Incorporated

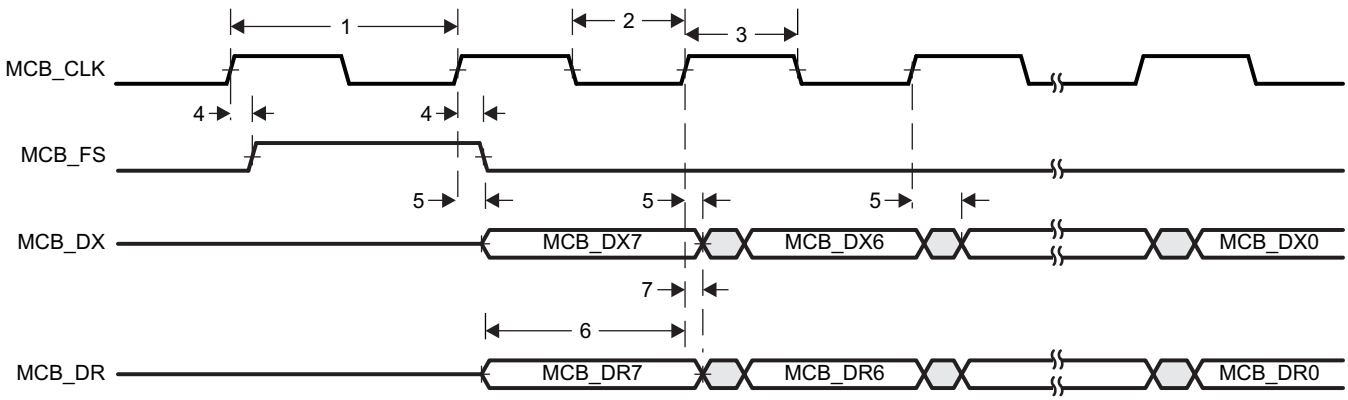

A. The timings apply to all configurations regardless of MCB_CLK polarity and which clock edges are used to drive output data and capture input data.
B. MCBSP_CLK corresponds to either MCBSP_CLKX or MCBSP_CLKR; MCBSP_FS corresponds to either MCBSP_FSX or MCBSP_FSR. McBSP in 6-pin mode: DX and DR as data pins; CLKX, CLKR, FSX and FSR as control pins. McBSP in 4-pin mode: DX and DR as data pins; CLKX and FSX pins as control pins. The CLKX and FSX pins are internally looped back via software configuration, respectively to the CLKR and FSR internal signals for data receive.
C. The polarity of McBSP frame synchronization is software configurable.
D. The active clock edge selection of MCBSP_CLK (rising or falling) on which MCBSP_DX data is latched and MCBSP_DR data is sampled is software configurable.
E. Timing diagrams are for data delay set to 1.
F. For further details about the registers used to configure McBSP, see the *Multichannel Buffered Serial Port (McBSP)* chapter of the *TMS320DM814x DaVinci Digital Media Processors Technical Reference Manual* (Literature Number: SPRUGZ8).

Figure 8-83. McBSP Master Mode Timing

Table 8-83. Timing Requirements for McBSP - Slave Mode(1)

(see Figure 8-84)

NO.			OPP100/120/166		UNIT
			MIN	MAX	
1	$t_{c(CLK)}$	Cycle time, MCB_CLK period(2)	20.83		ns
2	$t_{w(CLKL)}$	Pulse duration, MCB_CLK low(2)	0.5*P - 1(3)		ns
3	$t_{w(CLKH)}$	Pulse duration, MCB_CLK high(2)	0.5*P - 1(3)		ns
4	$t_{su(FSV-CLKAE)}$	Setup time, MCB_FS valid before MCB_CLK active edge(2)(4)	3.8		ns
5	$t_{h(CLKAE-FSV)}$	Hold time, MCB_FS valid after MCB_CLK active edge(2)(4)	0.5		ns
7	$t_{su(DRV-CLKAE)}$	Setup time, MCB_DR valid before MCB_CLK active edge(2)	3.8		ns
8	$t_{h(CLKAE-DRV)}$	Hold time, MCB_DR valid after MCB_CLK active edge(2)	0.5		ns

(1) The timings apply to all configurations regardless of MCB_CLK polarity and which clock edges are used to drive output data and capture input data.
(2) MCB_CLK corresponds to either MCB_CLKX or MCB_CLKR.
(3) P = MCB_CLKX/MCB_CLKR output CLK period, in ns; use whichever value is greater. This parameter applies to the maximum McBSP frequency. Operate serial clocks (CLKX/R) in the reasonable range of 40/60 duty cycle.
(4) MCB_FS corresponds to either MCB_FSX or MCB_FSR.

Table 8-84. Switching Characteristics Over Recommended Operating Conditions for McBSP - Slave Mode(1)

(see Figure 8-84)

NO.	PARAMETER		OPP100/120/166		UNIT
			MIN	MAX	
6	$t_{d(CLKXAE-DXV)}$	Delay time, input MCB_CLKx active edge to output MCB_DX valid	0.5	12.5	ns

(1) The timings apply to all configurations regardless of MCB_CLK polarity and which clock edges are used to drive output data and capture input data.

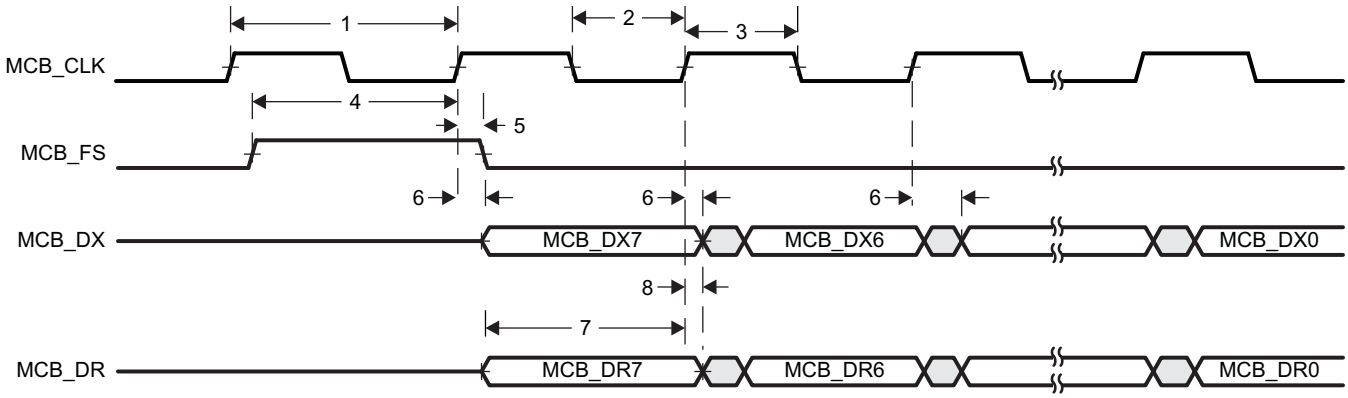

A. The timings apply to all configurations regardless of MCB_CLK polarity and which clock edges are used to drive output data and capture input data.

B. MCBSP_CLK corresponds to either MCBSP_CLKX or MCBSP_CLKR; MCBSP_FS corresponds to either MCBSP_FSX or MCBSP_FSR. McBSP in 6-pin mode: DX and DR as data pins; CLKX, CLKR, FSX and FSR as control pins. McBSP in 4-pin mode: DX and DR as data pins; CLKX and FSX pins as control pins. The CLKX and FSX pins are internally looped back via software configuration, respectively to the CLKR and FSR internal signals for data receive.

C. The polarity of McBSP frame synchronization is software configurable.

D. The active clock edge selection of MCBSP_CLK (rising or falling) on which MCBSP_DX data is latched and MCBSP_DR data is sampled is software configurable.

E. Timing diagrams are for data delay set to 1.

F. For further details about the registers used to configure McBSP, see the *Multichannel Buffered Serial Port (McBSP)* chapter of the *TMS320DM814x DaVinci Digital Media Processors Technical Reference Manual* (Literature Number: SPRUGZ8).

Figure 8-84. McBSP Slave Mode Timing

Copyright © 2011–2013, Texas Instruments Incorporated

8.16 MultiMedia Card/Secure Digital/Secure Digital Input Output (MMC/SD/SDIO)

The device includes 3 MMC/SD/SDIO Controllers which are compliant with MMC V4.3, Secure Digital Part 1 Physical Layer Specification V2.00 and Secure Digital Input Output (SDIO) V2.00 specifications.

The device MMC/SD/SDIO Controller has the following features:

- MultiMedia card (MMC)
- Secure Digital (SD) memory card
- MMC/SD protocol support
- SDIO protocol support
- Programmable clock frequency
- 1024 byte read/write FIFO to lower system overhead
- Slave EDMA transfer capability
- SD High capacity support

8.16.1 MMC/SD/SDIO Peripheral Register Descriptions

Table 8-85. MMC/SD/SDIO Registers(1)

MMC/SD/SDIO0 HEX ADDRESS	MMC/SD/SDIO1 HEX ADDRESS	MMC/SD/SDIO2 HEX ADDRESS	ACRONYM	REGISTER NAME
0x4806 0000	0x481D 8000	0x4781 0000	MMCHS_HL_REV	IP Revision Identifier
0x4806 0004	0x481D 8004	0x4781 0004	MMCHS_HL_HWINFO	Hardware Configuration
0x4806 0010	0x481D 8010	0x4781 0010	MMCHS_HL_SYSCONFIG	Clock Management Configuration
0x4806 0110	0x481D 8110	0x4781 0110	MMCHS_SYSCONFIG	System Configuration
0x4806 0114	0x481D 8114	0x4781 0114	MMCHS_SYSSTATUS	System Status
0x4806 0124	0x481D 8124	0x4781 0124	MMCHS_CSRE	Card status response error
0x4806 0128	0x481D 8128	0x4781 0128	MMCHS_SYSTEST	System Test
0x4806 012C	0x481D 812C	0x4781 012C	MMCHS_CON	Configuration
0x4806 0130	0x481D 8130	0x4781 0130	MMCHS_PWCNT	Power counter
0x4806 0200	0x481D 8200	0x4781 0200	MMCHS_SDMASA	SDMA System address:
0x4806 0204	0x481D 8204	0x4781 0204	MMCHS_BLK	Transfer Length Configuration
0x4806 0208	0x481D 8208	0x4781 0208	MMCHS_ARG	Command argument
0x4806 020C	0x481D 820C	0x4781 020C	MMCHS_CMD	Command and transfer mode
0x4806 0210	0x481D 8210	0x4781 0210	MMCHS_RSP10	Command Response 0 and 1
0x4806 0214	0x481D 8214	0x4781 0214	MMCHS_RSP32	Command Response 2 and 3
0x4806 0218	0x481D 8218	0x4781 0218	MMCHS_RSP54	Command Response 4 and 5
0x4806 021C	0x481D 821C	0x4781 021C	MMCHS_RSP76	Command Response 6 and 7
0x4806 0220	0x481D 8220	0x4781 0220	MMCHS_DATA	Data
0x4806 0224	0x481D 8224	0x4781 0224	MMCHS_PSTATE	Present state
0x4806 0228	0x481D 8228	0x4781 0228	MMCHS_HCTL	Host Control
0x4806 022C	0x481D 822C	0x4781 022C	MMCHS_SYSCTL	SD system control
0x4806 0230	0x481D 8230	0x4781 0230	MMCHS_STAT	Interrupt status
0x4806 0234	0x481D 8234	0x4781 0234	MMCHS_IE	Interrupt SD enable
0x4806 0238	0x481D 8238	0x4781 0238	MMCHS_ISE	Interrupt Signal Enable
0x4806 023C	0x481D 823C	0x4781 023C	MMCHS_AC12	Auto CMD12 Error Status
0x4806 0240	0x481D 8240	0x4781 0240	MMCHS_CAPA	Capabilities
0x4806 0248	0x481D 8248	0x4781 0248	MMCHS_CUR_CAPA	Maximum current capabilities

(1) SD/SDIO registers are limited to 32-bit data accesses; 16-bit and 8-bit accesses are not allowed and can corrupt register content.

Copyright © 2011–2013, Texas Instruments Incorporated

Table 8-85. MMC/SD/SDIO Registers[(1)] (continued)

MMC/SD/SDIO0 HEX ADDRESS	MMC/SD/SDIO1 HEX ADDRESS	MMC/SD/SDIO2 HEX ADDRESS	ACRONYM	REGISTER NAME
0x4806 0250	0x481D 8250	0x4781 0250	MMCHS_FE	Force Event
0x4806 0254	0x481D 8254	0x4781 0254	MMCHS_ADMAES	ADMA Error Status
0x4806 0258	0x481D 8258	0x4781 0258	MMCHS_ADMASAL	ADMA System address Low bits
0x4806 025C	0x481D 825C	0x4781 025C	MMCHS_ADMASAH	ADMA System address High bits
0x4806 02FC	0x481D 82FC	0x4781 02FC	MMCHS_REV	Versions

8.16.2 MMC/SD/SDIO Electrical Data/Timing

Table 8-86. Timing Requirements for MMC/SD/SDIO

(see Figure 8-86, Figure 8-88)

NO.				OPP100/120/166 ALL MODES MIN	OPP100/120/166 ALL MODES MAX	UNIT
1	$t_{su(CMDV-CLKH)}$	Setup time, SD_CMD valid before SD_CLK rising clock edge		4.1		ns
2	$t_{h(CLKH-CMDV)}$	Hold time, SD_CMD valid after SD_CLK rising clock edge	SD1	1.9		ns
			SD0, SD2	2.9		
3	$t_{su(DATV-CLKH)}$	Setup time, SD_DATx valid before SD_CLK rising clock edge		4.1		ns
4	$t_{h(CLKH-DATV)}$	Hold time, SD_DATx valid after SD_CLK rising clock edge	SD1	1.9		ns
			SD0, SD2	2.9		

Table 8-87. Switching Characteristics Over Recommended Operating Conditions for MMC/SD/SDIO

(see Figure 8-85 through Figure 8-88)

NO.	PARAMETER		OPP100/120/166 MODES 3.3 V STD 1.8 V SDR12 MIN	3.3 V STD 1.8 V SDR12 MAX	3.3 V HS 1.8 V SDR25 MIN	3.3 V HS 1.8 V SDR25 MAX	UNIT
7	$f_{op(CLK)}$	Operating frequency, SD_CLK		24		48	MHz
	$t_{c(CLK)}$	Operating period: SD_CLK	41.7		20.8		ns
8	$f_{op(CLKID)}$	Identification mode frequency, SD_CLK		400		400	kHz
	$t_{c(CLKID)}$	Identification mode period: SD_CLK	2500.0		2500.0		ns
9	$t_{w(CLKL)}$	Pulse duration, SD_CLK low	0.5*P[(1)]		0.5*P[(1)]		ns
10	$t_{w(CLKH)}$	Pulse duration, SD_CLK high	0.5*P[(1)]		0.5*P[(1)]		ns
11	$t_{r(CLK)}$	Rise time, All Signals (10% to 90%)		2.2		2.2	ns
12	$t_{f(CLK)}$	Fall time, All Signals (10% to 90%)		2.2		2.2	ns
13	$t_{d(CLKL-CMD)}$	Delay time, SD_CLK rising clock edge to SD_CMD transition	1.5	10	1.5	10	ns
14	$t_{d(CLKL-DAT)}$	Delay time, SD_CLK rising clock edge to SD_DATx transition	1.5	10	1.5	10	ns

(1) P = SD_CLK period.

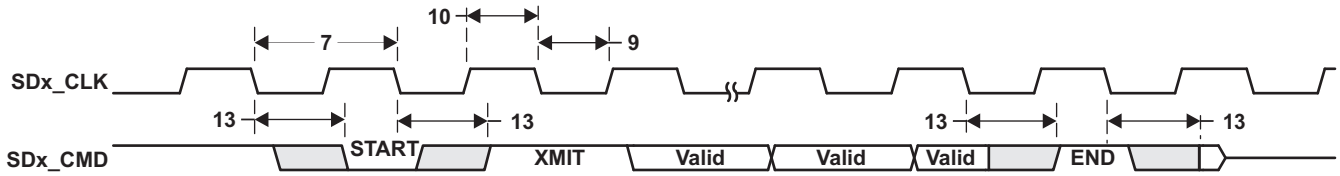

Figure 8-85. MMC/SD/SDIO Host Command Timing

Copyright © 2011–2013, Texas Instruments Incorporated

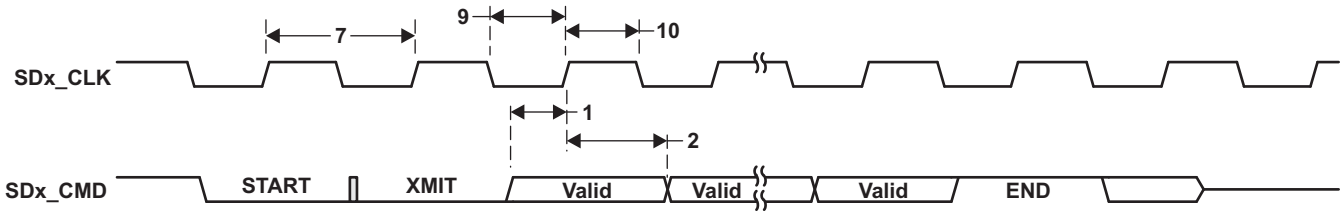

Figure 8-86. MMC/SD/SDIO Card Response Timing

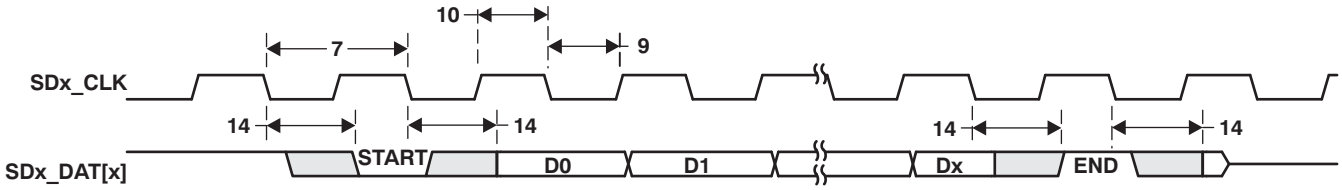

Figure 8-87. MMC/SD/SDIO Host Write Timing

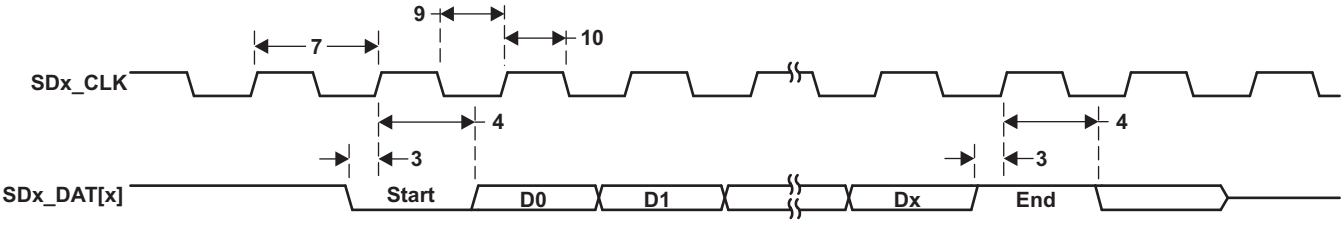

Figure 8-88. MMC/SD/SDIO Host Read and Card CRC Status Timing

8.17 Peripheral Component Interconnect Express (PCIe)

The device supports connections to PCIe-compliant devices via the integrated PCIe master/slave bus interface. The PCIe module is comprised of a dual-mode PCIe core and a SerDes PHY. The device implements a single one-lane PCIe 2.0 (5.0 GT/s) Endpoint/Root Complex port.

The device PCIe supports the following features:

- Supports Gen1/Gen2 in x1 or x2 mode
- One port with one 5 GT/s lane
- Single virtual channel (VC), single traffic class (TC)
- Single function in end-point mode
- Automatic width and speed negotiation and lane reversal
- Max payload: 128 byte outbound, 256 byte inbound
- Automatic credit management
- ECRC generation and checking
- Configurable BAR filtering
- Supports PCIe messages
- Legacy interrupt reception (RC) and generation (EP)
- MSI generation and reception
- PCI device power management, except D3 cold with vaux
- Active state power management state L0 and L1.

For more detailed information on the PCIe port peripheral module, see the *PCI Express (PCIe) Module* chapter of the *TMS320DM814x DaVinci Digital Media Processors Technical Reference Manual* (Literature Number: SPRUGZ8).

The PCIe peripheral on the device conforms to the PCI Express Base 2.0 Specification.

8.17.1 PCIe Peripheral Register Descriptions

Table 8-88. PCIe Registers

HEX ADDRESS	ACRONYM	REGISTER NAME
0x5100 0000	PID	Peripheral Version and ID
0x5100 0004	CMD_STATUS	Command Status
0x5100 0008	CFG_SETUP	Config Transaction Setup
0x5100 000C	IOBASE	IO TLP Base
0x5100 0010	TLPCFG	TLP Attribute Configuration
0x5100 0014	RSTCMD	Reset Command and Status
0x5100 0020	PMCMD	Power Management Command
0x5100 0024	PMCFG	Power Management Configuration
0x5100 0028	ACT_STATUS	Activity Status
0x5100 0030	OB_SIZE	Outbound Size
0x5100 0034	DIAG_CTRL	Diagnostic Control
0x5100 0038	ENDIAN	Endian Mode
0x5100 003C	PRIORITY	CBA Transaction Priority
0x5100 0050	IRQ_EOI	End of Interrupt
0x5100 0054	MSI_IRQ	MSI Interrupt IRQ
0x5100 0064	EP_IRQ_SET	Endpoint Interrupt Request Set
0x5100 0068	EP_IRQ_CLR	Endpoint Interrupt Request Clear
0x5100 006C	EP_IRQ_STATUS	Endpoint Interrupt Status
0x5100 0070	GPRO	General Purpose 0

Copyright © 2011–2013, Texas Instruments Incorporated

Table 8-88. PCIe Registers (continued)

HEX ADDRESS	ACRONYM	REGISTER NAME
0x5100 0074	GPR1	General Purpose 1
0x5100 0078	GPR2	General Purpose 2
0x5100 007C	GPR3	General Purpose 3
0x5100 0100	MSI0_IRQ_STATUS_RAW	MSI 0 Interrupt Raw Status
0x5100 0104	MSI0_IRQ_STATUS	MSI 0 Interrupt Enabled Status
0x5100 0108	MSI0_IRQ_ENABLE_SET	MSI 0 Interrupt Enable Set
0x5100 010C	MSI0_IRQ_ENABLE_CLR	MSI 0 Interrupt Enable Clear
0x5100 0180	IRQ_STATUS_RAW	Raw Interrupt Status
0x5100 0184	IRQ_STATUS	Interrupt Enabled Status
0x5100 0188	IRQ_ENABLE_SET	Interrupt Enable Set
0x5100 018C	IRQ_ENABLE_CLR	Interrupt Enable Clear
0x5100 01C0	ERR_IRQ_STATUS_RAW	Raw ERR Interrupt Status
0x5100 01C4	ERR_IRQ_STATUS	ERR Interrupt Enabled Status
0x5100 01C8	ERR_IRQ_ENABLE_SET	ERR Interrupt Enable Set
0x5100 01CC	ERR_IRQ_ENABLE_CLR	ERR Interrupt Enable Clear
0x5100 01D0	PMRST_IRQ_STATUS_RAW	Power Management and Reset Interrupt Status
0x5100 01D4	PMRST_IRQ_STATUS	Power Management and Reset Interrupt Enabled Status
0x5100 01D8	PMRST_ENABLE_SET	Power Management and Reset Interrupt Enable Set
0x5100 01DC	PMRST_ENABLE_CLR	Power Management and Reset Interrupt Enable Clear
0x5100 0200	OB_OFFSET_INDEXn	Outbound Translation Region N Offset Low and Index
0x5100 0204	OB_OFFSETn_HI	Outbound Translation Region N Offset High
0x5100 0300	IB_BAR0	Inbound Translation Bar Match 0
0x5100 0304	IB_START0_LO	Inbound Translation 0 Start Address Low
0x5100 0308	IB_START0_HI	Inbound Translation 0 Start Address High
0x5100 030C	IB_OFFSET0	Inbound Translation 0 Address Offset
0x5100 0310	IB_BAR1	Inbound Translation Bar Match 1
0x5100 0314	IB_START1_LO	Inbound Translation 1 Start Address Low
0x5100 0318	IB_START1_HI	Inbound Translation 1 Start Address High
0x5100 031C	IB_OFFSET1	Inbound Translation 1 Address Offset
0x5100 0320	IB_BAR2	Inbound Translation Bar Match 2
0x5100 0324	IB_START2_LO	Inbound Translation 2 Start Address Low
0x5100 0328	IB_START2_HI	Inbound Translation 2 Start Address High
0x5100 032C	IB_OFFSET2	Inbound Translation 2 Address Offset
0x5100 0330	IB_BAR3	Inbound Translation Bar Match 3
0x5100 0334	IB_START3_LO	Inbound Translation 3 Start Address Low
0x5100 0338	IB_START3_HI	Inbound Translation 3 Start Address High
0x5100 033C	IB_OFFSET3	Inbound Translation 3 Address Offset
0x5100 0380	PCS_CFG0	PCS Configuration 0
0x5100 0384	PCS_CFG1	PCS Configuration 1
0x5100 0388	PCS_STATUS	PCS Status
0x5100 038C	SERDES_STATUS	SerDes Status
0x5100 0390	SERDES_RXCFG0	SerDes Receive Configuration 0 Register
0x5100 0394	SERDES_RXCFG1	SerDes Receive Configuration 1 Register
0x5100 0398	SERDES_RXCFG2	SerDes Receive Configuration 2 Register
0x5100 039C	SERDES_RXCFG3	SerDes Receive Configuration 3 Register
0x5100 03A0	SERDES_RXCFG4	SerDes Receive Configuration 4 Register
0x5100 03A4	SERDES_TXCFG0	SerDes Transmit Configuration 0 Register

Copyright © 2011–2013, Texas Instruments Incorporated

Table 8-88. PCIe Registers (continued)

HEX ADDRESS	ACRONYM	REGISTER NAME
0x5100 03A8	SERDES_TXCFG1	SerDes Transmit Configuration 1 Register
0x5100 03AC	SERDES_TXCFG2	SerDes Transmit Configuration 2 Register
0x5100 03B0	SERDES_TXCFG3	SerDes Transmit Configuration 3 Register
0x5100 03B4	SERDES_TXCFG4	SerDes Transmit Configuration 4 Register

Table 8-89. Configuration Registers Type 0 Summary

HEX ADDRESS	ACRONYM	NAME
5100_1000	VENDOR_DEVICE_ID	Vendor Device ID Register
5100_1004	STATUS_COMMAND	Status and Command Register
5100_1008	CLASSCODE_REVID	Class Code and Revision Register
5100_100C	BIST_HEADER	BIST, Header Type, Latency Time, and Cache Line Size register
5100_1010	BAR0 (64/-32-Bit Mode)	Base Address Register 0
5100_1014	BAR1 (32-Bit Mode)	Base Address Register 1
	BAR1 (64-Bit Mode)	Base Address Register 1 (64-bit BAR0)
5100_1018	BAR2 (64/-32-Bit Mode)	Base Address Register 2
5100_101C	BAR3 (32-Bit Mode)	Base Address Register 3
	BAR3 (64-Bit Mode)	Base Address Register 3 (64-bit BAR2)
5100_1020	BAR4 (64/-32-Bit Mode)	Base Address Register 4
5100_1024	BAR5 (32-Bit Mode)	Base Address Register 5
	BAR5 (64-Bit Mode)	Base Address Register 5 (64-bit BAR4)
5100_1028	CARDBUS	CardBus CIS Pointer Register
5100_102C	SUBSYS_VNDR_ID	Subsystem and Subsystem Vendor ID Register
5100_1030	EXPNSN_ROM	Expansion ROM Base Address Register
5100_1034	CAP_PTR	Capabilities Pointer Register
5100_103C	INT_PIN	Interrupt Pin Register

Table 8-90. Configuration Registers Type 1 Summary

HEX ADDRESS	ACRONYM	NAME
5100_1000	VENDOR_DEVICE_ID	Vendor Device ID Register
5100_1004	STATUS_COMMAND	Status and Command Register
5100_1008	CLASSCODE_REVID	Class Code and Revision Register
5100_100C	BIST_HEADER	BIST, Header Type, Latency Time, and Cache Line Size register
5100_1010	BAR0 (64/-32-Bit Mode)	Base Address Register 0 (64/32-bit mode)

Copyright © 2011–2013, Texas Instruments Incorporated

Table 8-90. Configuration Registers Type 1 Summary (continued)

HEX ADDRESS	ACRONYM	NAME
5100_1014	BAR1 (32-Bit Mode)	Base Address Register 1 (32-bit mode)
	BAR1 (64-Bit Mode)	Base Address Register 1 (64-bit BAR0)
5100_1018	BUSNUM	Latency Timer and Bus Number Register
5100_101C	SECSTAT	Secondary Status and I/O Base/Limit Register
5100_1020	MEMSPACE	Memory Limit and Base Register
5100_1024	PREFETCH_MEM	Prefetchable Memory Limit and Base Register
5100_1028	PREFETCH_BASE	Prefetchable Memory Base Upper 32-bits Register
5100_102C	PREFETCH_LIMIT	Prefetchable Limit Upper 32-bits Register
5100_1030	IOSPACE	I/O Base and Limit Upper 16-bits Register
5100_1034	CAP_PTR	Capabilities Pointer Register
5100_1038	EXPNSN_ROM	Expansion ROM Base Address Register
5100_103C	BRIDGE_INT	Bridge Control Register

Table 8-91. Power Management Capability Register Summary

HEX ADDRESS	ACRONYM	NAME
5100_1040	PMCAP	Power Management Capability Register
5100_1044	PM_CTL_STAT	Power Management Control and Status Register

Table 8-92. Message Signaled Interrupts (MSI) Register Summary

HEX ADDRESS	ACRONYM	NAME
5100_1050	MSI_CAP	MSI Capabilities Register
5100_1054	MSI_LOW32	MSI Lower 32 bits Register
5100_1058	MSI_UP32	MSI Upper 32 bits Register
5100_105C	MSI_DATA	MSI Data Register

Table 8-93. PCI Express Capabilities Register Summary

HEX ADDRESS	ACRONYM	NAME
5100_1070	PCIES_CAP	PCI Express Capabilities Register
5100_1074	DEVICE_CAP	Device Capabilities Register
5100_1078	DEV_STAT_CTRL	Device Status and Control Register
5100_107C	LINK_CAP	Link Capabilities Register
5100_1080	LINK_STAT_CTRL	Link Status and Control Register
5100_1084	SLOT_CAP	Slot Capabilities Register (RC Mode Only)
5100_1088	SLOT_STAT_CTRL	Slot Status and Control Register (RC Mode Only)
5100_108C	ROOT_CTRL_CAP	Root Control and Capabilities Register (RC Mode Only)
5100_1090	ROOT_STATUS	Root Status and Control Register (RC Mode Only)
5100_1094	DEV_CAP2	Device Capabilities 2 Register
5100_1098	DEV_STAT_CTRL2	Device Status and Control 2 Register
5100_10A0	LINK_CTRL2	Link Control 2 Register

Table 8-94. PCI Express Extended Capabilities Register Summary

HEX ADDRESS	ACRONYM	NAME
5100_1100	PCIE_EXTCAP	PCI Express Extended Capabilities Header Register
5100_1104	PCIE_UNCERR	PCI Express Uncorrectable Error Status Register
5100_1108	PCIE_UNCERR_MASK	PCI Express Uncorrectable Error Mask Register
5100_110C	PCIE_UNCERR_SVRTY	PCI Express Uncorrectable Error Severity Register

Copyright © 2011–2013, Texas Instruments Incorporated

Table 8-94. PCI Express Extended Capabilities Register Summary (continued)

HEX ADDRESS	ACRONYM	NAME
5100_1110	PCIE_CERR	PCI Express Correctable Error Status Register
5100_1114	PCIE_CERR_MASK	PCI Express Correctable Error Mask Register
5100_1118	PCIE_ACCR	PCI Express Advanced Capabilities and Control Register
5100_111C	HDR_LOG0	Header Log 0 Register
5100_1120	HDR_LOG1	Header Log 1 Register
5100_1124	HDR_LOG2	Header Log 2 Register
5100_1128	HDR_LOG3	Header Log 3 Register
5100_112C	RC_ERR_CMD	Root Error Command Register
5100_1130	RC_ERR_ST	Root Error Status Register
5100_1134	ERR_SRC_ID	Error Source Identification Register

Table 8-95. Port Logic Register Summary

HEX ADDRESS	ACRONYM	NAME
5100_1700	PL_ACKTIMER	Ack Latency Time and Replay Timer Register
5100_1704	PL_OMSG	Other Message Register
5100_1708	PL_FORCE_LINK	Port Force Link Register
5100_170C	ACK_FREQ	Ack Frequency Register
5100_1710	PL_LINK_CTRL	Port Link Control Register
5100_1714	LANE_SKEW	Lane Skew Register
5100_1718	SYM_NUM	Symbol Number Register
5100_171C	SYMTIMER_FLTMASK	Symbol Timer and Filter Mask Register
5100_1720	FLT_MASK2	Filter Mask 2 Register
5100_1728	DEBUG0	Debug 0 Register
5100_172C	DEBUG1	Debug 1 Register
5100_180C	PL_GEN2	Gen2 Register

8.17.2 PCIe Electrical Data/Timing

Texas Instruments (TI) has performed the simulation and system characterization to ensure that the PCIe peripheral meets all AC timing specifications as required by the PCI Express Base 2.0 Specification. Therefore, the AC timing specifications are not reproduced here. For more information on the AC timing specifications, see Sections 4.3.3.5 and 4.3.4.4 of the PCI Express Base 2.0 Specification.

8.17.3 PCIe Design and Layout Guidelines

8.17.3.1 Clock Source

A standard 100-MHz PCIe differential clock source must be used for PCIe operation (for more details, see Section 7.4.2, *SERDES CLKN/P Input Clock*).

8.17.3.2 PCIe Connections and Interface Compliance

The PCIe interface on the device is compliant with the PCI Express Base 2.0 Specification. Refer to the PCIe specifications for all connections that are described in it. For coupling capacitor selection, see Section 8.17.3.2.1, *Coupling Capacitors*.

The use of PCIe-compatible bridges and switches is allowed for interfacing with more than one other processor or PCIe device.

 Copyright © 2011–2013, Texas Instruments Incorporated

8.17.3.2.1 Coupling Capacitors

AC coupling capacitors are required on the transmit data pair. Table 8-96 shows the requirements for these capacitors.

Table 8-96. AC Coupling Capacitors Requirements

PARAMETER	MIN	TYP	MAX	UNIT
PCIe AC coupling capacitor value	75		200	nF
PCIe AC coupling capacitor package size (1)		0402	0603	EIA (2)

(1) The physical size of the capacitor should be as small as practical. Use the same size on both lines in each pair, placed side by side.
(2) EIA LxW units; that is, a 0402 is a 40x20 mil (thousandths of an inch) surface-mount capacitor.

8.17.3.2.2 Polarity Inversion

The PCIe specification requires polarity inversion support. This means, for layout purposes, polarity is unimportant since each signal can change its polarity on-die inside the chip. This means polarity within a lane is unimportant for layout.

8.17.3.3 Non-Standard PCIe Connections

The following sections contain suggestions for any PCIe connection that is ***not*** described in the official PCIe specification, such as an on-board device-to-device connection, or device-to-other PCIe-compliant processor connection.

8.17.3.3.1 PCB Stackup Specifications

Table 8-97 shows the stackup and feature sizes required for these types of PCIe connections.

Table 8-97. PCIe PCB Stackup Specifications

PARAMETER	MIN	TYP	MAX	UNIT
PCB Routing/Plane Layers	4	6	-	Layers
Signal Routing Layers	2	3	-	Layers
Number of ground plane cuts allowed within PCIe routing region	-	-	0	Cuts
Number of layers between PCIe routing area and reference plane (1)	-	-	0	Layers
PCB Routing clearance	-	4	-	Mils
PCB Trace width (2)	-	4	-	Mils
PCB BGA escape via pad size	-	20	-	Mils
PCB BGA escape via hole size	-	10		Mils
Processor BGA pad size (3) (4)		0.4		mm

(1) A reference plane may be a ground plane or the power plane referencing the PCIe signals.
(2) In breakout area.
(3) Non-solder mask defined pad.
(4) Per IPC-7351A BGA pad size guideline.

8.17.3.3.2 Routing Specifications

The PCIe data signal traces must be routed to achieve 100 Ω (±20%) differential impedance and 60 Ω (±15%) single-ended impedance. The single-ended impedance is required because differential signals are extremely difficult to closely couple on PCBs and, therefore, single-ended impedance becomes important. These requirements are the same as those recommended in the *PCIe Motherboard Checklist 1.0* document, available from PCI-SIG.

These impedances are impacted by trace width, trace spacing, distance between signals and referencing planes, and dielectric material. Verify with a PCB design tool that the trace geometry for both data signal pairs result in as close to 100 Ω differential impedance and 60 Ω single-ended impedance as possible. For best accuracy, work with your PCB fabricator to ensure this impedance is met.

In general, closely coupled differential signal traces are not an advantage on PCBs. When differential signals are closely coupled, tight spacing and width control is necessary. Very small width and spacing variations affect impedance dramatically, so tight impedance control can be more problematic to maintain in production.

Loosely coupled PCB differential signals make impedance control much easier. Wider traces and spacing make obstacle avoidance easier, and trace width variations do not affect impedance as much; therefore, it is easier to maintain an accurate impedance over the length of the signal. The wider traces also show reduced skin effect and, therefore, often result in better signal integrity.

Table 8-98 shows the routing specifications for the PCIe data signals.

Table 8-98. PCIe Routing Specifications

PARAMETER	MIN	TYP	MAX	UNIT
PCIe signal trace length			10 (1)	Inches
Differential pair trace matching			10 (2)	Mils
Number of stubs allowed on PCIe traces (3)			0	Stubs
TX/RX pair differential impedance	80	100	120	Ω
TX/RX single ended impedance	51	60	69	Ω
Pad size of vias on PCIe trace			25 (4)	Mils
Hole size of vias on PCIe trace			14	Mils
Number of vias on each PCIe trace			3	Vias (5)
PCIe differential pair to any other trace spacing	2*DS (6)			

(1) Beyond this, signal integrity may suffer.
(2) For example, RXP0 within 10 Mils of RXN0.
(3) In-line pads may be used for probing.
(4) 35-Mil antipad max recommended.
(5) Vias must be used in pairs with their distance minimized.
(6) DS = differential spacing of the PCIe traces.

Copyright © 2011–2013, Texas Instruments Incorporated

8.18 Serial ATA Controller (SATA)

The Serial ATA (SATA) peripheral provides a direct interface to one hard disk drive (SATA 300) or up to 15 hard disk drives using a Port Multiplier and supports the following features:

- Serial ATA 1.5 Gbps and 3 Gbps speeds
- Integrated PHY
- Integrated Rx and Tx data buffers
- Supports all SATA power management features
- Hardware-assisted native command queuing (NCQ) for up to 32 entries
- Supports port multiplier with command-based switching
- Activity LED support.

8.18.1 SATA Peripheral Register Descriptions

Table 8-99. SATA Registers

HEX ADDRESS	ACRONYM	REGISTER NAME
0x4A14 0000	CAP	HBA Capabilities
0x4A14 0004	GHC	Global HBA Control
0x4A14 0008	IS	Interrupt Status
0x4A14 000C	PI	Ports Implemented
0x4A14 0010	VS	AHCI Version
0x4A14 0014	CCC_CTL	Command Completion Coalescing Control
0x4A14 0018	CCC_PORTS	Command Completion Coalescing Ports
0x4A14 001C - 0x4A14 009C	-	Reserved
0x4A14 00A0	BISTAFR	BIST Active FIS
0x4A14 00A4	BISTCR	BIST Control
0x4A14 00A8	BISTFCTR	BIST FIS Count
0x4A14 00AC	BISTSR	BIST Status
0x4A14 00B0	BISTDECR	BIST DWORD Error Count
0x4A14 00B4 - 0x4A14 00DF	-	Reserved
0x4A14 00E0	TIMER1MS	BIST DWORD Error Count
0x4A14 00E4	-	Reserved
0x4A14 00E8	GPARAM1R	Global Parameter 1
0x4A14 00EC	GPARAM2R	Global Parameter 2
0x4A14 00F0	PPARAMR	Port Parameter
0x4A14 00F4	TESTR	Test
0x4A14 00F8	VERSIONR	Version
0x4A14 00FC	IDR (PID)	ID
0x4A14 0100	P0CLB	Port 0 Command List Base Address
0x4A14 0104	-	Reserved
0x4A14 0108	P0FB	Port 0 FIS Base Address
0x4A14 010C	-	Reserved
0x4A14 0110	P0IS	Port 0 Interrupt Status
0x4A14 0114	P0IE	Port 0 Interrupt Enable
0x4A14 0118	P0CMD	Port 0 Command
0x4A14 011C	-	Reserved
0x4A14 0120	P0TFD	Port 0 Task File Data
0x4A14 0124	P0SIG	Port 0 Signature
0x4A14 0128	P0SSTS	Port 0 Serial ATA Status (SStatus)

Copyright © 2011–2013, Texas Instruments Incorporated

Table 8-99. SATA Registers (continued)

HEX ADDRESS	ACRONYM	REGISTER NAME
0x4A14 012C	P0SCTL	Port 0 Serial ATA Control (SControl)
0x4A14 0130	P0SERR	Port 0 Serial ATA Error (SError)
0x4A14 0134	P0SACT	Port 0 Serial ATA Active (SActive)
0x4A14 0138	P0CI	Port 0 Command Issue
0x4A14 013C	P0SNTF	Port 0 Serial ATA Notification
0x4A14 0140 - 0x4A14 016C	-	Reserved
0x4A14 0170	P0DMACR	Port 0 DMA Control
0x4A14 0174 - 0x4A14 017C	-	Reserved
0x4A14 0180 - 0x4A14 01FC	-	Reserved
0x4A14 1100	IDLE	Idle and Standby Modes
0x4A14 1104	CFGRX0	PHY Configuration Receive 0 Register
0x4A14 1108	CFGRX1	PHY Configuration Receive 1 Register
0x4A14 110C	CFGRX2	PHY Configuration Receive 2 Register
0x4A14 1110	CFGRX3	PHY Configuration Receive 3 Register
0x4A14 1114	CFGRX4	PHY Configuration Receive 4 Register
0x4A14 1118	STSRX	Receive Bus PHY-to-Controller Status Register (Used for Debug Purposes)
0x4A14 111C	CFGTX0	PHY Configuration Transmit 0 Register
0x4A14 1120	CFGTX1	PHY Configuration Transmit 1 Register
0x4A14 1124	CFGTX2	PHY Configuration Transmit 2 Register
0x4A14 1128	CFGTX3	PHY Configuration Transmit 3 Register
0x4A14 112C	CFGTX4	PHY Configuration Transmit 4 Register
0x4A14 1130	STSTX	Transmit Bus Controller-to-PHY Status Register (Used for Debug Purposes)

8.18.2 SATA Interface Design Guidelines

This section provides PCB design and layout guidelines for the SATA interface. The design rules constrain PCB trace length, PCB trace skew, signal integrity, cross-talk, and signal timing. Simulation and system design work has been done to ensure the SATA interface requirements are met.

A standard 100-MHz differential clock source must be used for SATA operation (for details, see Section 7.4.2, *SERDES_CLKN/P Input Clock*).

8.18.2.1 SATA Interface Schematic

Figure 8-89 shows the data portion of the SATA interface schematic. The specific pin numbers can be obtained from Table 3-26, *Serial ATA Terminal Functions*.

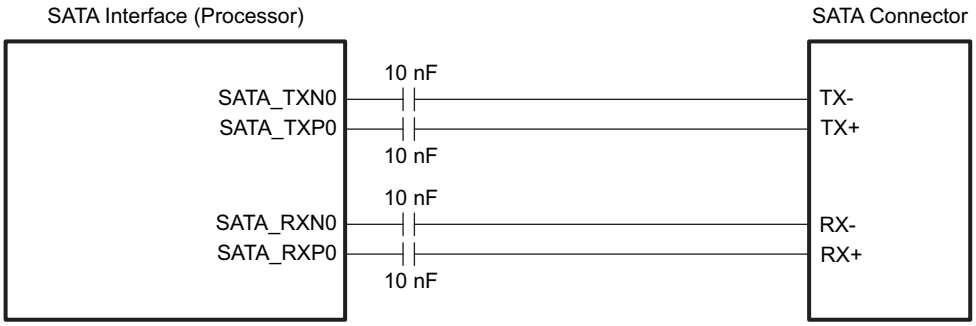

Figure 8-89. SATA Interface High-Level Schematic

Copyright © 2011–2013, Texas Instruments Incorporated

8.18.2.2 Compatible SATA Components and Modes

Table 8-100 shows the compatible SATA components and supported modes. Note that the only supported configuration is an internal cable from the processor host to the SATA device.

Table 8-100. SATA Supported Modes

PARAMETER	MIN	MAX	UNIT	SUPPORTED
Transfer Rates	1.5	3.0	Gbps	
xSATA	-	-	-	No
Backplane	-	-	-	No
Internal Cable (iSATA)	-	-	-	Yes

8.18.2.3 PCB Stackup Specifications

Table 8-101 shows the PCB stackup and feature sizes required for SATA.

Table 8-101. SATA PCB Stackup Specifications

PARAMETER	MIN	TYP	MAX	UNIT
PCB routing/plane layers	4	6	-	Layers
Signal routing layers	2	3	-	Layers
Number of ground plane cuts allowed within SATA routing region	-	-	0	Cuts
Number of layers between SATA routing region and reference ground plane	-	-	0	Layers
PCB trace width, w	-	4	-	Mils
PCB BGA escape via pad size	-	20	-	Mils
PCB BGA escape via hole size	-	10		Mils
Processor BGA pad size (1)		0.4		mm

(1) NSMD pad, per IPC-7351A BGA pad size guideline.

8.18.2.4 Routing Specifications

The SATA data signal traces must be routed to achieve 100 Ω (±20%) differential impedance and 60 Ω (±15%) single-ended impedance. The single-ended impedance is required because differential signals are extremely difficult to closely couple on PCBs and, therefore, single-ended impedance becomes important. 60 Ω is chosen for the single-ended impedance to minimize problems caused by too low an impedance.

These impedances are impacted by trace width, trace spacing, distance to reference planes, and dielectric material. Verify with a PCB design tool that the trace geometry for both data signal pairs results in as close to 100 Ω differential impedance and 60 Ω single-ended impedance traces as possible. For best accuracy, work with your PCB fabricator to ensure this impedance is met.

Table 8-102 shows the routing specifications for the SATA data signals.

Table 8-102. SATA Routing Specifications

PARAMETER	MIN	TYP	MAX	UNIT
Processor-to-SATA header trace length			10 (1)	Inches
Number of stubs allowed on SATA traces (2)			0	Stubs
TX/RX pair differential impedance	80	100	120	Ω
TX/RX single ended impedance	51	60	69	Ω
Number of vias on each SATA trace			3	Vias (3)
SATA differential pair to any other trace spacing	2*DS (4)			

(1) Beyond this, signal integrity may suffer.
(2) In-line pads may be used for probing.
(3) Vias must be used in pairs with their distance minimized.
(4) DS = differential spacing of the SATA traces.

Copyright © 2011–2013, Texas Instruments Incorporated

8.18.2.5 Coupling Capacitors

AC coupling capacitors are required on the receive data pair. Table 8-103 shows the requirements for these capacitors.

Table 8-103. SATA AC Coupling Capacitors Requirements

PARAMETER	MIN	TYP	MAX	UNIT
SATA AC coupling capacitor value	1	10	12	nF
SATA AC coupling capacitor package size (1)		0402	0603	EIA (2)

(1) The physical size of the capacitor should be as small as practical. Use the same size on both lines in each pair, placed side by side.
(2) EIA LxW units; that is, a 0402 is a 40 x 20 mil surface-mount capacitor.

Copyright © 2011–2013, Texas Instruments Incorporated

8.19 Serial Peripheral Interface (SPI)

The SPI is a high-speed synchronous serial input/output port that allows a serial bit stream of programmed length (4 to 32 bits) to be shifted into and out of the device at a programmed bit-transfer rate. The SPI is normally used for communication between the device and external peripherals. Typical applications include an interface-to-external I/O or peripheral expansion via devices such as shift registers, display drivers, SPI EEPROMs, and Analog-to-Digital Converters (ADCs).

The SPI supports the following features:

- Master/Slave operation
- Four chip selects for interfacing/control to up to four SPI Slave devices and connection to a single external Master
- 32-bit shift register
- Buffered receive/transmit data register per channel (1 word deep), FIFO size is 64 bytes
- Programmable SPI configuration per channel (clock definition, enable polarity and word width)
- Supports one interrupt request and two DMA requests per channel.

For more detailed information on the SPI, see the *Multichannel Serial Port Interface (McSPI)* chapter of the *TMS320DM814x DaVinci Digital Media Processors Technical Reference Manual* (Literature Number: SPRUGZ8).

8.19.1 SPI Peripheral Register Descriptions

Table 8-104. SPI Registers

HEX ADDRESS RANGE				ACRONYM	REGISTER NAME
SPI0	SPI1	SPI2	SPI3		
0x4803 0000	0x481A 0000	0x481A 2000	0x481A 4000	MCSPI_HL_REV	SPI REVISION
0x4803 0004	0x481A 0004	0x481A 2004	0x481A 4004	MCSPI_HL_HWINFO	SPI HARDWARE INFORMATION
0x4803 0008 - 0x4803 000C	0x481A 0008 - 0x481A 000C	0x481A 2008 - 0x481A 200C	0x481A 4008 - 0x481A 400C	-	RESERVED
0x4803 0010	0x481A 0010	0x481A 2010	0x481A 4010	MCSPI_HL_SYSCONFIG	SPI SYSTEM CONFIGURATION
0x4803 0014 - 0x4803 00FF	0x481A 0014 - 0x481A 00FF	0x481A 2014 - 0x481A 20FF	0x481A 4014 - 0x481A 40FF	-	RESERVED
0x4803 0100	0x481A 0100	0x481A 2100	0x481A 4100	MCSPI_REVISION	REVISION
0x4803 0104 - 0x4803 010C	0x481A 0104 - 0x481A 010C	0x481A 2104 - 0x481A 210C	0x481A 4104 - 0x481A 410C	-	RESERVED
0x4803 0110	0x481A 0110	0x481A 2110	0x481A 4110	MCSPI_SYSCONFIG	SYSTEM CONFIGURATION
0x4803 0114	0x481A 0114	0x481A 2114	0x481A 4114	MCSPI_SYSSTATUS	SYSTEM STATUS
0x4803 0118	0x481A 0118	0x481A 2118	0x481A 4118	MCSPI_IRQSTATUS	INTERRUPT STATUS
0x4803 011C	0x481A 011C	0x481A 211C	0x481A 411C	MCSPI_IRQENABLE	INTERRUPT ENABLE
0x4803 0120	0x481A 0120	0x481A 2120	0x481A 4120	MCSPI_WAKEUPENABLE	WAKEUP ENABLE
0x4803 0124	0x481A 0124	0x481A 2124	0x481A 4124	MCSPI_SYST	SYSTEM TEST
0x4803 0128	0x481A 0128	0x481A 2128	0x481A 4128	MCSPI_MODULCTRL	MODULE CONTROL
0x4803 012C	0x481A 012C	0x481A 212C	0x481A 412C	MCSPI_CH0CONF	CHANNEL 0 CONFIGURATION
0x4803 0130	0x481A 0130	0x481A 2130	0x481A 4130	MCSPI_CH0STAT	CHANNEL 0 STATUS
0x4803 0134	0x481A 0134	0x481A 2134	0x481A 4134	MCSPI_CH0CTRL	CHANNEL 0 CONTROL
0x4803 0138	0x481A 0138	0x481A 2138	0x481A 4138	MCSPI_TX0	CHANNEL 0 TRANSMITTER

Table 8-104. SPI Registers (continued)

HEX ADDRESS RANGE				ACRONYM	REGISTER NAME
SPI0	SPI1	SPI2	SPI3		
0x4803 013C	0x481A 013C	0x481A 213C	0x481A 413C	MCSPI_RX0	CHANNEL 0 RECEIVER
0x4803 0140	0x481A 0140	0x481A 2140	0x481A 4140	MCSPI_CH1CONF	CHANNEL 1 CONFIGURATION
0x4803 0144	0x481A 0144	0x481A 2144	0x481A 4144	MCSPI_CH1STAT	CHANNEL 1 STATUS
0x4803 0148	0x481A 0148	0x481A 2148	0x481A 4148	MCSPI_CH1CTRL	CHANNEL 1 CONTROL
0x4803 014C	0x481A 014C	0x481A 214C	0x481A 414C	MCSPI_TX1	CHANNEL 1 TRANSMITTER
0x4803 0150	0x481A 0150	0x481A 2150	0x481A 4150	MCSPI_RX1	CHANNEL 1 RECEIVER
0x4803 0154	0x481A 0154	0x481A 2154	0x481A 4154	MCSPI_CH2CONF	CHANNEL 2 CONFIGURATION
0x4803 0158	0x481A 0158	0x481A 2158	0x481A 4158	MCSPI_CH2STAT	CHANNEL 2 STATUS
0x4803 015C	0x481A 015C	0x481A 215C	0x481A 415C	MCSPI_CH2CTRL	CHANNEL 2 CONTROL
0x4803 0160	0x481A 0160	0x481A 2160	0x481A 4160	MCSPI_TX2	CHANNEL 2 TRANSMITTER
0x4803 0164	0x481A 0164	0x481A 2164	0x481A 4164	MCSPI_RX2	CHANNEL 2 RECEIVER
0x4803 0168	0x481A 0168	0x481A 2168	0x481A 4168	MCSPI_CH3CONF	CHANNEL 3 CONFIGURATION
0x4803 016C	0x481A 016C	0x481A 216C	0x481A 416C	MCSPI_CH3STAT	CHANNEL 3 STATUS
0x4803 0170	0x481A 0170	0x481A 2170	0x481A 4170	MCSPI_CH3CTRL	CHANNEL 3 CONTROL
0x4803 0174	0x481A 0174	0x481A 2174	0x481A 4174	MCSPI_TX3	CHANNEL 3 TRANSMITTER
0x4803 0178	0x481A 0178	0x481A 2178	0x481A 4178	MCSPI_RX3	CHANNEL 3 RECEIVER
0x4803 017C	0x481A 017C	0x481A 217C	0x481A 417C	MCSPI_XFERLEVEL	TRANSFER LEVELS
0x4803 0180	0x481A 0180	0x481A 2180	0x481A 4180	MCSPI_DAFTX	DMA ADDRESS ALIGNED FIFO TRANSMITTER
0x4803 0184 - 0x4803 019C	0x481A 0184 - 0x481A 019C	0x481A 2184 - 0x481A 219C	0x481A 4184 - 0x481A 419C	-	RESERVED
0x4803 01A0	0x481A 01A0	0x481A 21A0	0x481A 41A0	MCSPI_DAFRX	DMA ADDRESS ALIGNED FIFO RECEIVER
0x4803 01A4 - 0x4803 01FF	0x481A 01A4 - 0x481A 01FF	0x481A 21A4 - 0x481A 21FF	0x481A 41A4 - 0x481A 41FF	-	RESERVED

Copyright © 2011–2013, Texas Instruments Incorporated

8.19.2 SPI Electrical Data/Timing

Table 8-105. Timing Requirements for SPI - Master Mode

(see Figure 8-90 and Figure 8-91)

NO.				OPP100/120/166 MIN	OPP100/120/166 MAX	UNIT
MASTER: SPI0, SPI1, SPI2 (M0) and SPI3 (M0)1 LOAD AT A MAXIMUM OF 5 pF						
1	$t_{c(SPICLK)}$	Cycle time, SPI_CLK(1)(2)		20.8(3)		ns
2	$t_{w(SPICLKL)}$	Pulse duration, SPI_CLK low(1)		0.5*P - 1(4)		ns
3	$t_{w(SPICLKH)}$	Pulse duration, SPI_CLK high(1)		0.5*P - 1(4)		ns
4	$t_{su(MISO-SPICLK)}$	Setup time, SPI_D[x] valid before SPI_CLK active edge(1)	SPI0, SPI1	2.29		ns
			SPI2, SPI3	4		
5	$t_{h(SPICLK-MISO)}$	Hold time, SPI_D[x] valid after SPI_CLK active edge(1)		2.67		ns
6	$t_{d(SPICLK-MOSI)}$	Delay time, SPI_CLK active edge to SPI_D[x] transition(1)		-3.57	3.57	ns
7	$t_{d(SCS-MOSI)}$	Delay time, $\overline{\text{SPI_SCS[x]}}$ active edge to SPI_D[x] transition			3.57	ns
8	$t_{d(SCS-SPICLK)}$	Delay time, $\overline{\text{SPI_SCS[x]}}$ active to SPI_CLK first edge(1)	MASTER_PHA0(5)	B-4.2(6)		ns
			MASTER_PHA1(5)	A-4.2(7)		ns
9	$t_{d(SPICLK-SCS)}$	Delay time, SPI_CLK last edge to $\overline{\text{SPI_SCS[x]}}$ inactive(1)	MASTER_PHA0(5)	A-4.2(7)		ns
			MASTER_PHA1(5)	B-4.2(6)		ns
MASTER: SPI0, SPI1, SPI2 (M0) and SPI3 (M0) LOAD AT MAX 25pF MASTER: SPI2 (M1, M2, M3) and SPI3 (M1, M2, M3) 1 to 4 LOAD AT 5 to 25pF						
1	$t_{c(SPICLK)}$	Cycle time, SPI_CLK(1)(2)		41.7(8)		ns
2	$t_{w(SPICLKL)}$	Pulse duration, SPI_CLK low(1)		0.5*P - 2(4)		ns
3	$t_{w(SPICLKH)}$	Pulse duration, SPI_CLK high(1)		0.5*P - 2(4)		ns
4	$t_{su(MISO-SPICLK)}$	Setup time, SPI_D[x] valid before SPI_CLK active edge(1)	SPI0, SPI1	4		ns
			SPI2, SPI3	6		
5	$t_{h(SPICLK-MISO)}$	Hold time, SPI_D[x] valid after SPI_CLK active edge(1)		3.8		ns
6	$t_{d(SPICLK-MOSI)}$	Delay time, SPI_CLK active edge to SPI_D[x] transition(1)		-5.5	5.5	ns
7	$t_{d(SCS-MOSI)}$	Delay time, $\overline{\text{SPI_SCS[x]}}$ active edge to SPI_D[x] transition			5.5	ns
8	$t_{d(SCS-SPICLK)}$	Delay time, $\overline{\text{SPI_SCS[x]}}$ active to SPI_CLK first edge(1)	MASTER_PHA0(5)	B-3.5(6)		ns
			MASTER_PHA1(5)	A-3.5(7)		ns
9	$t_{d(SPICLK-SCS)}$	Delay time, SPI_CLK last edge to $\overline{\text{SPI_SCS[x]}}$ inactive(1)	MASTER_PHA0(5)	A-3.5(7)		ns
			MASTER_PHA1(5)	B-3.5(6)		ns

(1) This timing applies to all configurations regardless of SPI_CLK polarity and which clock edges are used to drive output data and capture input data.
(2) Related to the SPI_CLK maximum frequency.
(3) Maximum frequency = 48 MHz
(4) P = SPICLK period.
(5) SPI_CLK phase is programmable with the PHA bit of the SPI_CH(i)CONF register.
(6) B = (TCS + 0.5) * TSPICLKREF * F_{ratio}, where TCS is a bit field of the SPI_CH(i)CONF register and F_{ratio} = Even ≥2.
(7) When P = 20.8 ns, A = (TCS + 1) * TSPICLKREF, where TCS is a bit field of the SPI_CH(i)CONF register. When P > 20.8 ns, A = (TCS + 0.5) * F_{ratio} * TSPICLKREF, where TCS is a bit field of the SPI_CH(i)CONF register.
(8) Maximum frequency = 24 MHz

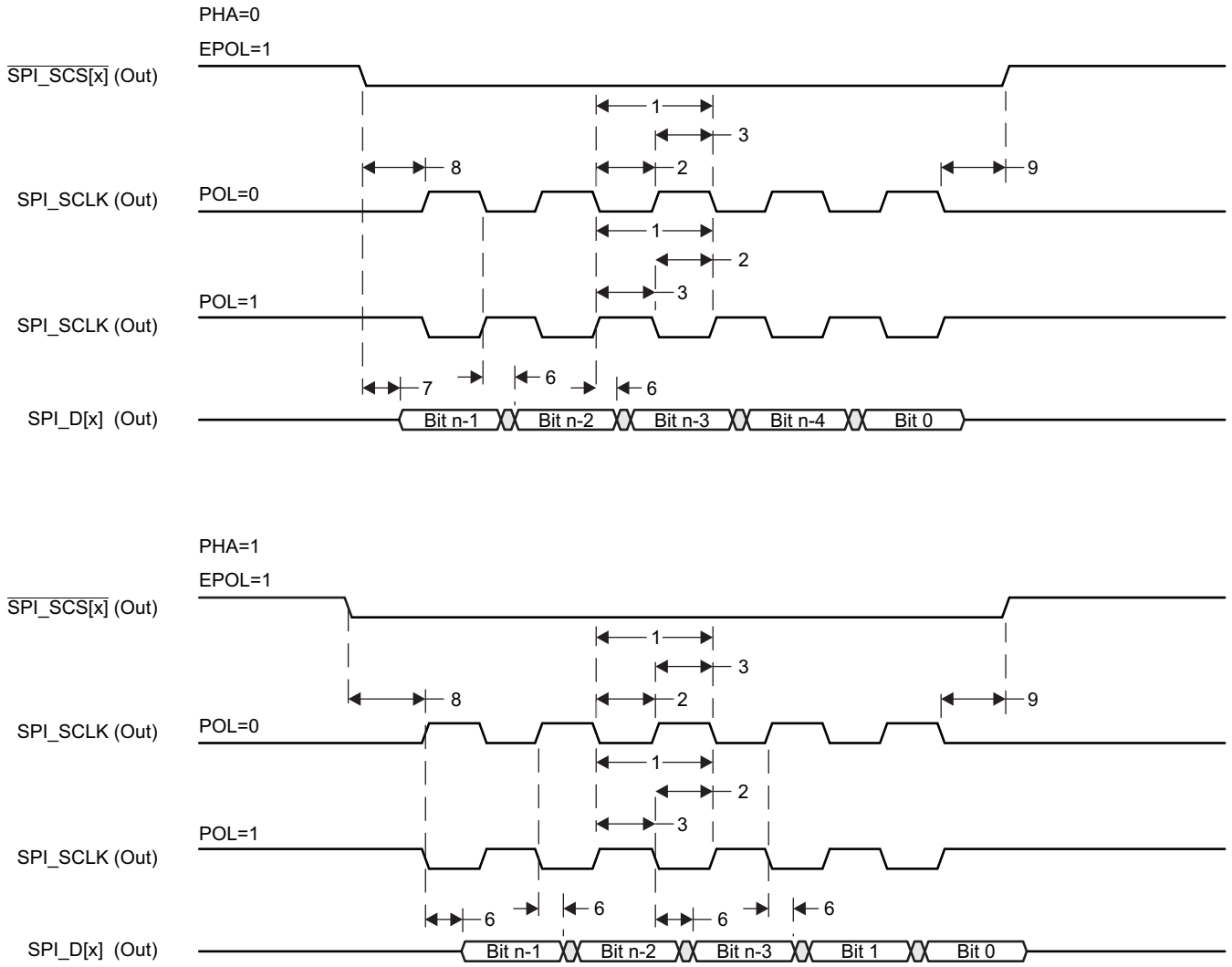

Figure 8-90. SPI Master Mode Transmit Timing

Copyright © 2011–2013, Texas Instruments Incorporated

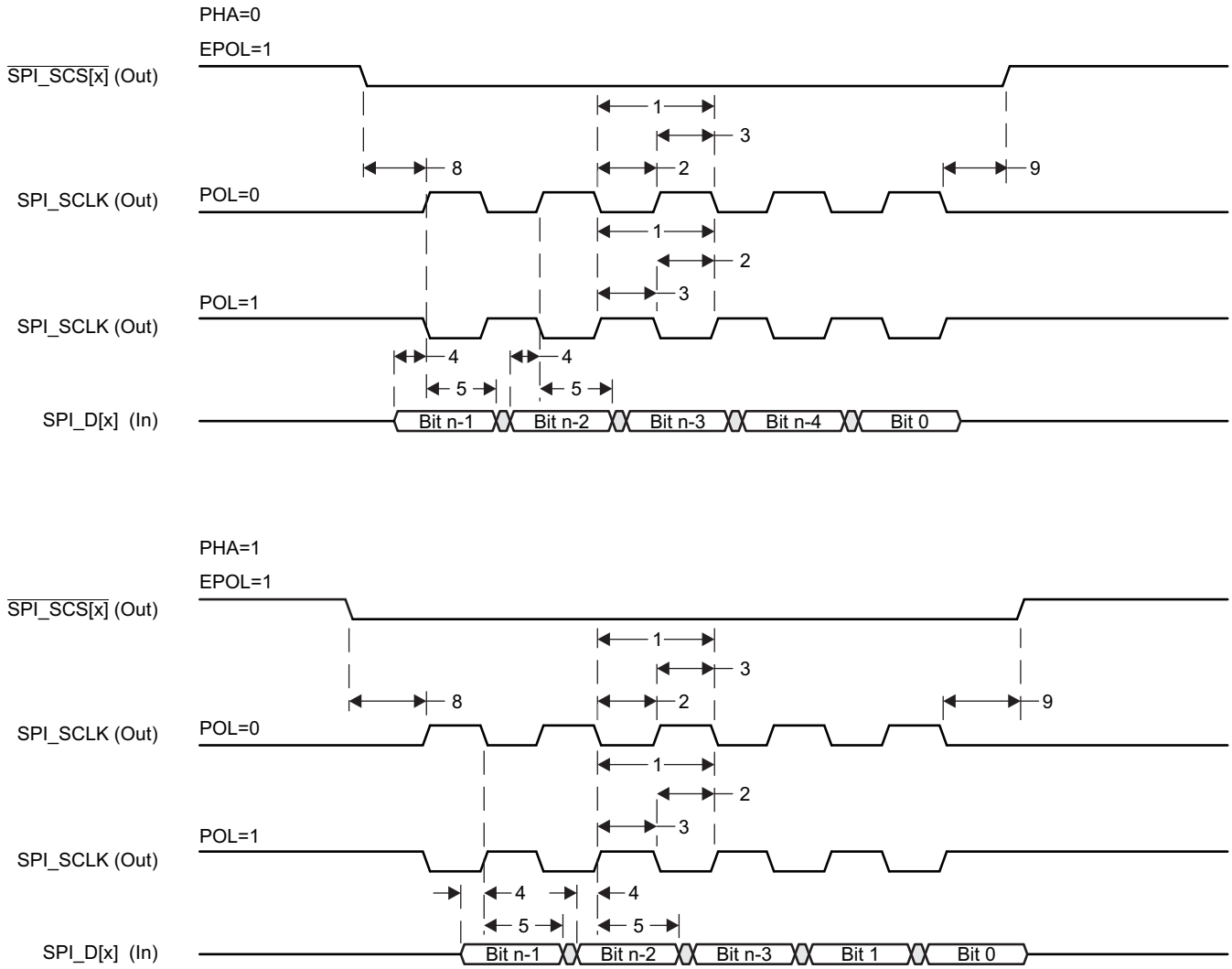

Figure 8-91. SPI Master Mode Receive Timing

Table 8-106. Timing Requirements for SPI - Slave Mode

(see Figure 8-92 and Figure 8-93)

NO.			OPP100/120/166		UNIT
			MIN	MAX	
1	$t_{c(SPICLK)}$	Cycle time, SPI_CLK (1)(2)	62.5 (3)		ns
2	$t_{w(SPICLKL)}$	Pulse duration, SPI_CLK low (1)	0.5*P - 3 (4)		ns
3	$t_{w(SPICLKH)}$	Pulse duration, SPI_CLK high (1)	0.5*P - 3 (4)		ns
4	$t_{su(MOSI-SPICLK)}$	Setup time, SPI_D[x] valid before SPI_CLK active edge (1)	12.92		ns
5	$t_{h(SPICLK-MOSI)}$	Hold time, SPI_D[x] valid after SPI_CLK active edge (1)	12.92		ns
6	$t_{d(SPICLK-MISO)}$	Delay time, SPI_CLK active edge to SPI_D[x] transition (1)	-4.00	17.1	ns
7	$t_{d(SCS-MISO)}$	Delay time, $\overline{\text{SPI_SCS[x]}}$ active edge to SPI_D[x] transition (5)		17.1	ns
8	$t_{su(SCS-SPICLK)}$	Setup time, $\overline{\text{SPI_SCS[x]}}$ valid before SPI_CLK first edge (1)	12.92		ns

(1) This timing applies to all configurations regardless of SPI_CLK polarity and which clock edges are used to drive output data and capture input data.
(2) Related to the input maximum frequency supported by the SPI module.
(3) Maximum frequency = 16 MHz
(4) P = SPICLK period.
(5) PHA = 0; SPI_CLK phase is programmable with the PHA bit of the SPI_CH(i)CONF register.

Copyright © 2011–2013, Texas Instruments Incorporated

Table 8-106. Timing Requirements for SPI - Slave Mode (continued)

(see Figure 8-92 and Figure 8-93)

NO.			OPP100/120/166		UNIT
			MIN	MAX	
9	$t_{h(SPICLK-SCS)}$	Hold time, $\overline{SPI_SCS[x]}$ valid after SPI_CLK last edge (1)	12.92		ns

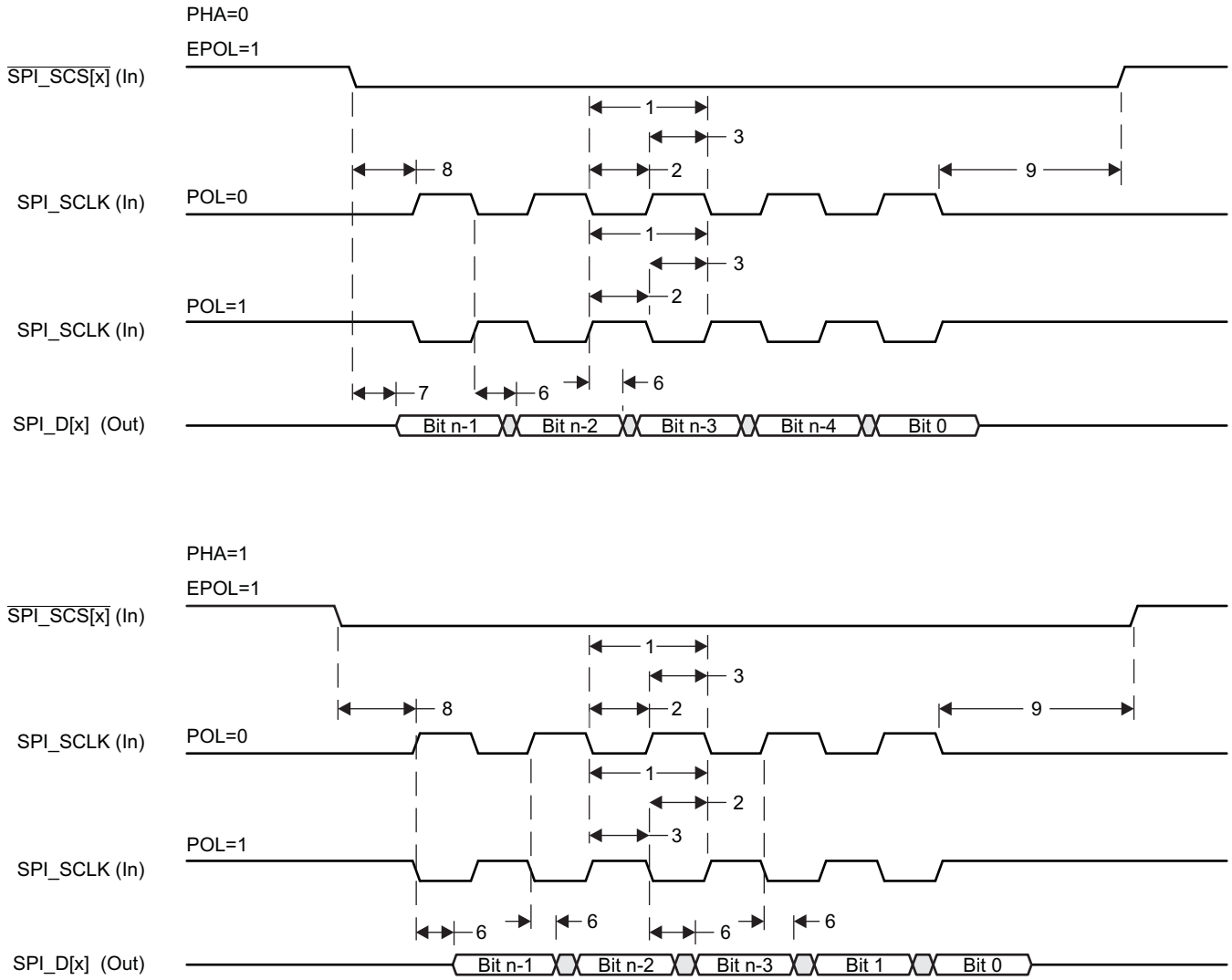

Figure 8-92. SPI Slave Mode Transmit Timing

Copyright © 2011–2013, Texas Instruments Incorporated

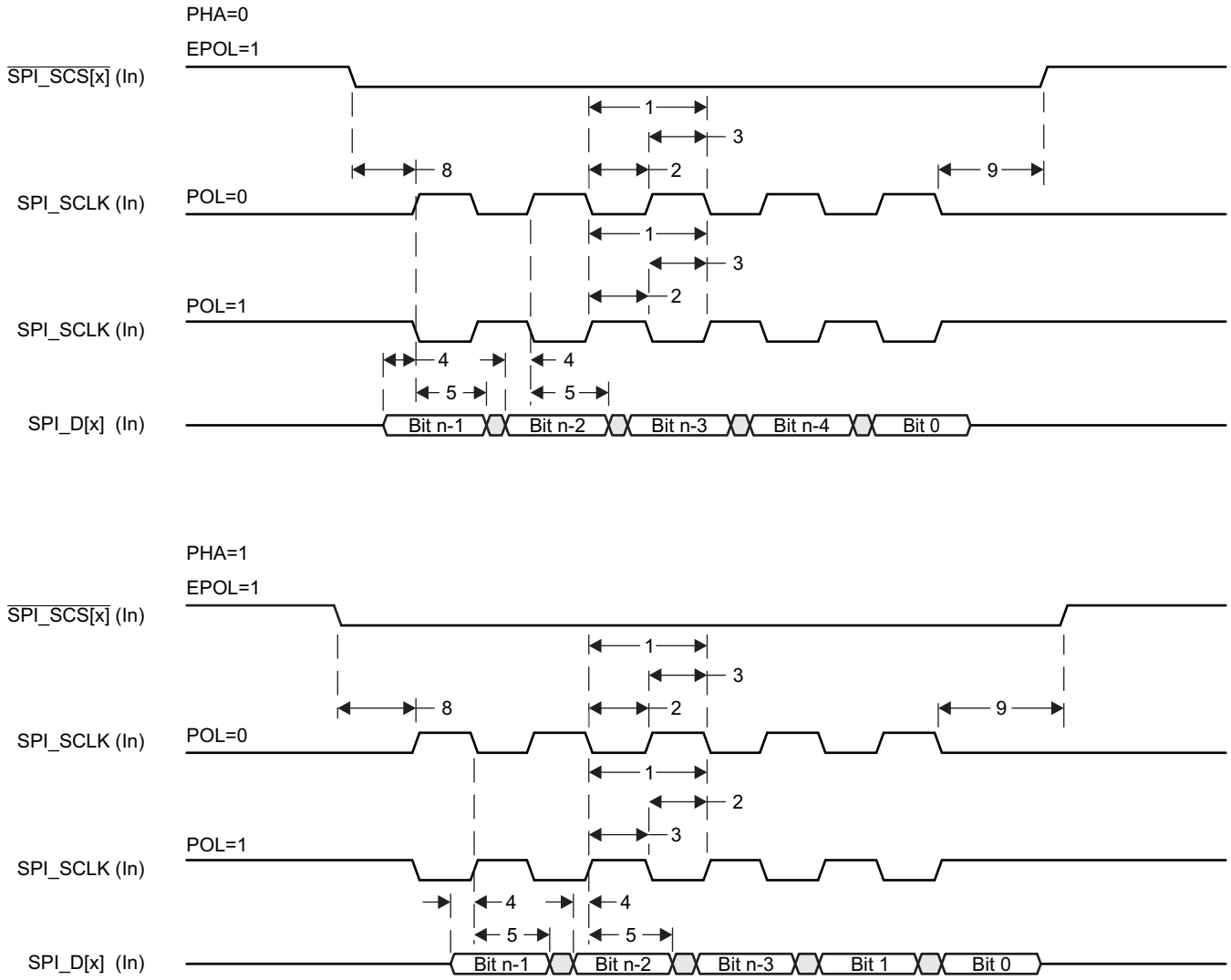

Figure 8-93. SPI Slave Mode Receive Timing

8.20 Timers

The device has eight 32-bit general-purpose (GP) timers (TIMER8 - TIMER1) that have the following features:

- TIMER8, TIMER1 are for software use and do not have an external connection
- Dedicated input trigger for capture mode and dedicated output trigger/pulse width modulation (PWM) signal
- Interrupts generated on overflow, compare, and capture
- Free-running 32-bit upward counter
- Supported modes:
  - Compare and capture modes
  - Auto-reload mode
  - Start-stop mode
- TIMER[8:1] functional clock is sourced from either the DEVOSC, AUXOSC, AUD_CLK2/1/0, TCLKIN, or SYSCLK18 27 MHz as selected by the timer clock multiplexers.
- On-the-fly read/write register (while counting)
- Generates interrupts to the ARM, DSP, and Media Controller.

The device has one system watchdog timer that have the following features:

- Free-running 32-bit upward counter
- On-the-fly read/write register (while counting)
- Reset upon occurrence of a timer overflow condition
- The system watchdog timer has two possible clock sources:
  - RCOSC32K oscillator
  - RTCDIVIDER
- The watchdog timer is used to provide a recovery mechanism for the device in the event of a fault condition, such as a non-exiting code loop.

For more detailed information on the GP and Watchdog Timers, see the *Timers* and *Watchdog Timer* chapters of the *TMS320DM814x DaVinci Digital Media Processors Technical Reference Manual* (Literature Number: SPRUGZ8).

8.20.1 Timer Peripheral Register Descriptions

Copyright © 2011–2013, Texas Instruments Incorporated

8.20.2 Timer Electrical/Data Timing

Table 8-107. Timing Requirements for Timer

(see Figure 8-94)

NO.			OPP100/120/166		UNIT
			MIN	MAX	
1	$t_{w(EVTIH)}$	Pulse duration, high	4P (1)		ns
2	$t_{w(EVTIL)}$	Pulse duration, low	4P (1)		ns

(1) P = module clock.

Table 8-108. Switching Characteristics Over Recommended Operating Conditions for Timer

(see Figure 8-94)

NO.	PARAMETER		OPP100/120/166		UNIT
			MIN	MAX	
3	$t_{w(EVTOH)}$	Pulse duration, high	4P-3 (1)		ns
4	$t_{w(EVTOL)}$	Pulse duration, low	4P-3 (1)		ns

(1) P = module clock.

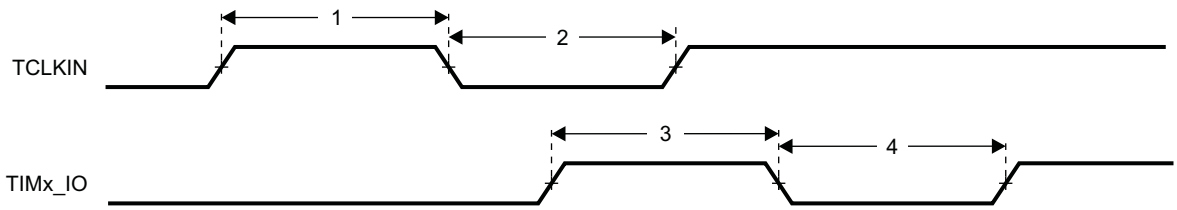

Figure 8-94. Timer Timing

8.21 Universal Asynchronous Receiver/Transmitter (UART)

The UART performs serial-to-parallel conversions on data received from a peripheral device and parallel-to-serial conversion on data received from the CPU. The device provides up to six UART peripheral interfaces, depending on the selected pin multiplexing.

Each UART has the following features:

- Selectable UART/IrDA (SIR/MIR)/CIR modes
- Dual 64-entry FIFOs for received and transmitted data payload
- Programmable and selectable transmit and receive FIFO trigger levels for DMA and interrupt generation
- Baud-rate generation based upon programmable divisors N (N=1…16384)
- Two DMA requests and one interrupt request to the system
- Can connect to any RS-232 compliant device.

UART functions include:

- Baud-rate up to 3.6 Mbit/s on UART0, UART1, and UART2
- Baud-rate up to 12 Mbit/s on UART3, UART4, and UART5
- Programmable serial interfaces characteristics
  - 5, 6, 7, or 8-bit characters
  - Even, odd, or no parity-bit generation and detection
  - 1, 1.5, or 2 stop-bit generation
  - Flow control: hardware (RTS/CTS) or software (XON/XOFF)
- Additional modem control functions (UART0_DTR, UART0_DSR, UART0_DCD, and UART0_RIN) for UART0 only; UART1, UART2, UART3, UART4, and UART5 do not support full-flow control signaling.

IR-IrDA functions include:

- Support of IrDA 1.4 slow infrared (SIR, baud-rate up to 115.2 Kbits/s), medium infrared (MIR, baud-rate up to 1.152 Mbits/s) and fast infrared (FIR baud-rate up to 4.0 Mbits/s) communications
- Supports framing error, cyclic redundancy check (CRC) error, illegal symbol (FIR), and abort pattern (SIR, MIR) detection
- 8-entry status FIFO (with selectable trigger levels) available to monitor frame length and frame errors.

IR-CIR functions include:

- Consumer infrared (CIR) remote control mode with programmable data encoding
- Free data format (supports any remote control private standards)
- Selectable bit rate and configurable carrier frequency.

For more detailed information on the UART peripheral, see the *UART/IrDA/CIR Module* chapter of the *TMS320DM814x DaVinci Digital Media Processors Technical Reference Manual* (Literature Number: SPRUGZ8).

8.21.1 UART Peripheral Register Descriptions

Copyright © 2011–2013, Texas Instruments Incorporated

8.21.2 UART Electrical/Data Timing

Table 8-109. Timing Requirements for UART

(see Figure 8-95)

NO.			OPP100/120/166		UNIT
			MIN	MAX	
4	$t_{w(RX)}$	Pulse width, receive data bit, 15/30/100pF high or low	0.96U (1)	1.05U (1)	ns
5	$t_{w(CTS)}$	Pulse width, receive start bit, 15/30/100pF high or low	0.96U (1)	1.05U (1)	ns
	$t_{d(RTS-TX)}$	Delay time, transmit start bit to transmit data	P (2)		ns
	$t_{d(CTS-TX)}$	Delay time, receive start bit to transmit data	P (2)		ns

(1) U = UART baud time = 1/programmed baud rate
(2) P = Clock period of the reference clock (FCLK, usually 48 MHz).

Table 8-110. Switching Characteristics Over Recommended Operating Conditions for UART

(see Figure 8-95)

NO.	PARAMETER			OPP100/120/166		UNIT
				MIN	MAX	
	$f_{(baud)}$	Maximum programmable baud rate	15 pF (UART0/1/2)		5	MHz
			15 pF (UART3/4/5)		12	
			30 pF		0.23	
			100 pF		0.115	
2	$t_{w(TX)}$	Pulse width, transmit data bit, 15/30/100 pF high or low		U - 2 (1)	U + 2 (1)	ns
3	$t_{w(RTS)}$	Pulse width, transmit start bit, 15/30/100 pF high or low		U - 2 (1)	U + 2 (1)	ns

(1) U = UART baud time = 1/programmed baud rate

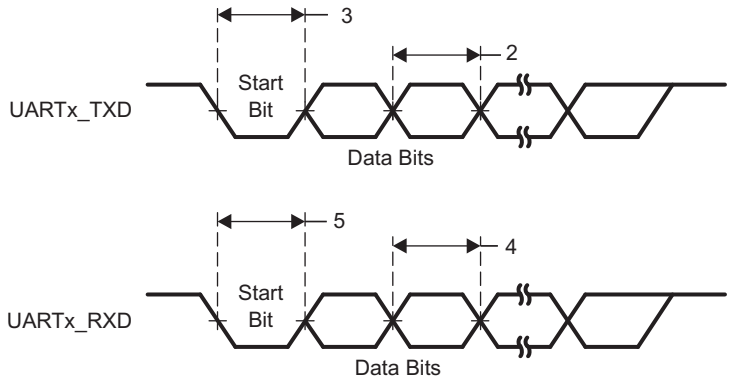

Figure 8-95. UART Timing

8.22 Universal Serial Bus (USB2.0)

The device includes two USB2.0 modules which support the *Universal Serial Bus Specification Revision 2.0.* The following are some of the major USB features that are supported:

- USB 2.0 peripheral at high speed (HS: 480 Mbps) and full speed (FS: 12 Mbps)
- USB 2.0 host at HS, FS, and low speed (LS: 1.5 Mbps)
- Each endpoint (other than endpoint 0, control only) can support all transfer modes (control, bulk, interrupt, and isochronous)
- Supports high-bandwidth ISO mode
- Supports 16 Transmit (TX) and 16 Receive (RX) endpoints including endpoint 0
- FIFO RAM
  - 32K endpoint
  - Programmable size
- Includes two integrated PHYs
- RNDIS-like mode for terminating RNDIS-type protocols without using short-packet termination for support of MSC applications.
- USB OTG extensions — session request protocol (SRP) and host negotiation protocol (HNP)

The USB2.0 peripherals do not support the following features:

- On-chip charge pump (VBUS Power must be generated external to the device.)
- RNDIS mode acceleration for USB sizes that are not multiples of 64 bytes
- Endpoint max USB packet sizes that do not conform to the USB 2.0 spec (for FS/LS: 8, 16, 32, 64, – and 1023 are defined; for HS: 64, 128, 512, and 1024 are defined

For more detailed information on the USB2.0 peripheral, see the *Universal Serial Bus (USB)* chapter of the *TMS320DM814x DaVinci Digital Media Processors Technical Reference Manual* (Literature Number: SPRUGZ8).

8.22.1 USB2.0 Peripheral Register Descriptions

Table 8-111. USB2.0 Submodules

SUBMODULE ADDRESS OFFSET	SUBMODULE NAME
0x0000	USBSS registers
0x1000	USB0 controller registers
0x1800	USB1 controller registers
0x2000	CPPI DMA controller registers
0x3000	CPPI DMA scheduler registers
0x4000	CPPI DMA Queue Manager registers

Table 8-112. USB Subsystem (USBSS) Registers (1)

HEX ADDRESS	ACRONYM	REGISTER NAME
0x4740 0000	REVREG	USBSS REVISION
0x4740 0004 - 0x4740 000C	-	Reserved
0x4740 0010	SYSCONFIG	USBSS SYSCONFIG
0x4740 0014 - 0x4740 001C	-	Reserved
0x4740 0020	EOI	USBSS IRQ_EOI
0x4740 0024	IRQSTATRAW	USBSS IRQ_STATUS_RAW
0x4740 0028	IRQSTAT	USBSS IRQ_STATUS

(1) USBSS registers contain the registers that are used to control at the global level and apply to all sub-modules.

Copyright © 2011–2013, Texas Instruments Incorporated

Table 8-112. USB Subsystem (USBSS) Registers[(1)] (continued)

HEX ADDRESS	ACRONYM	REGISTER NAME
0x4740 002C	IRQENABLER	USBSS IRQ_ENABLE_SET
0x4740 0030	IRQCLEARR	USBSS IRQ_ENABLE_CLR
0x4740 0034 - 0x4740 00FC	-	Reserved
0x4740 0100	IRQDMATHOLDTX00	USBSS IRQ_DMA_THRESHOLD_TX0_0
0x4740 0104	IRQDMATHOLDTX01	USBSS IRQ_DMA_THRESHOLD_TX0_1
0x4740 0108	IRQDMATHOLDTX02	USBSS IRQ_DMA_THRESHOLD_TX0_2
0x4740 010C	IRQDMATHOLDTX03	USBSS IRQ_DMA_THRESHOLD_TX0_3
0x4740 0110	IRQDMATHOLDRX00	USBSS IRQ_DMA_THRESHOLD_RX0_0
0x4740 0114	IRQDMATHOLDRX01	USBSS IRQ_DMA_THRESHOLD_RX0_1
0x4740 0118	IRQDMATHOLDRX02	USBSS IRQ_DMA_THRESHOLD_RX0_2
0x4740 011C	IRQDMATHOLDRX03	USBSS IRQ_DMA_THRESHOLD_RX0_3
0x4740 0120	IRQDMATHOLDTX10	USBSS IRQ_DMA_THRESHOLD_TX1_0
0x4740 0124	IRQDMATHOLDTX11	USBSS IRQ_DMA_THRESHOLD_TX1_1
0x4740 0128	IRQDMATHOLDTX12	USBSS IRQ_DMA_THRESHOLD_TX1_2
0x4740 012C	IRQDMATHOLDTX13	USBSS IRQ_DMA_THRESHOLD_TX1_3
0x4740 0130	IRQDMATHOLDRX10	USBSS IRQ_DMA_THRESHOLD_RX1_0
0x4740 0134	IRQDMATHOLDRX11	USBSS IRQ_DMA_THRESHOLD_RX1_1
0x4740 0138	IRQDMATHOLDRX12	USBSS IRQ_DMA_THRESHOLD_RX1_2
0x4740 013C	IRQDMATHOLDRX13	USBSS IRQ_DMA_THRESHOLD_RX1_3
0x4740 0140	IRQDMAENABLE0	USBSS IRQ_DMA_ENABLE_0
0x4740 0144	IRQDMAENABLE1	USBSS IRQ_DMA_ENABLE_1
0x4740 0148 - 0x4740 01FC	-	Reserved
0x4740 0200	IRQFRAMETHOLDTX00	USBSS IRQ_FRAME_THRESHOLD_TX0_0
0x4740 0204	IRQFRAMETHOLDTX01	USBSS IRQ_FRAME_THRESHOLD_TX0_1
0x4740 0208	IRQFRAMETHOLDTX02	USBSS IRQ_FRAME_THRESHOLD_TX0_2
0x4740 020C	IRQFRAMETHOLDTX03	USBSS IRQ_FRAME_THRESHOLD_TX0_3
0x4740 0210	IRQFRAMETHOLDRX00	USBSS IRQ_FRAME_THRESHOLD_RX0_0
0x4740 0214	IRQFRAMETHOLDRX01	USBSS IRQ_FRAME_THRESHOLD_RX0_1
0x4740 0218	IRQFRAMETHOLDRX02	USBSS IRQ_FRAME_THRESHOLD_RX0_2
0x4740 021C	IRQFRAMETHOLDRX03	USBSS IRQ_FRAME_THRESHOLD_RX0_3
0x4740 0220	IRQFRAMETHOLDTX10	USBSS IRQ_FRAME_THRESHOLD_TX1_0
0x4740 0224	IRQFRAMETHOLDTX11	USBSS IRQ_FRAME_THRESHOLD_TX1_1
0x4740 0228	IRQFRAMETHOLDTX12	USBSS IRQ_FRAME_THRESHOLD_TX1_2
0x4740 022C	IRQFRAMETHOLDTX13	USBSS IRQ_FRAME_THRESHOLD_TX1_3
0x4740 0230	IRQFRAMETHOLDRX10	USBSS IRQ_FRAME_THRESHOLD_RX1_0
0x4740 0234	IRQFRAMETHOLDRX11	USBSS IRQ_FRAME_THRESHOLD_RX1_1
0x4740 0238	IRQFRAMETHOLDRX12	USBSS IRQ_FRAME_THRESHOLD_RX1_2
0x4740 023C	IRQFRAMETHOLDRX13	USBSS IRQ_FRAME_THRESHOLD_RX1_3
0x4740 0240	IRQFRAMEENABLE0	USBSS IRQ_FRAME_ENABLE_0
0x4740 0244	IRQFRAMEENABLE1	USBSS IRQ_FRAME_ENABLE_1
0x4740 0248 - 0x4740 0FFC	-	Reserved

Copyright © 2011–2013, Texas Instruments Incorporated

Table 8-113. USB0 Controller Registers

HEX ADDRESS	ACRONYM	REGISTER NAME
0x4740 1000	USB0REV	USB0 REVISION
0x4740 1004 - 0x4740 1010	-	Reserved
0x4740 1014	USB0CTRL	USB0 Control
0x4740 1018	USB0STAT	USB0 Status
0x4740 101C	-	Reserved
0x4740 1020	USB0IRQMSTAT	USB0 IRQ_MERGED_STATUS
0x4740 1024	USB0IRQEOI	USB0 IRQ_EOI
0x4740 1028	USB0IRQSTATRAW0	USB0 IRQ_STATUS_RAW_0
0x4740 102C	USB0IRQSTATRAW1	USB0 IRQ_STATUS_RAW_1
0x4740 1030	USB0IRQSTAT0	USB0 IRQ_STATUS_0
0x4740 1034	USB0IRQSTAT1	USB0 IRQ_STATUS_1
0x4740 1038	USB0IRQENABLESET0	USB0 IRQ_ENABLE_SET_0
0x4740 103C	USB0IRQENABLESET1	USB0 IRQ_ENABLE_SET_1
0x4740 1040	USB0IRQENABLECLR0	USB0 IRQ_ENABLE_CLR_0
0x4740 1044	USB0IRQENABLECLR1	USB0 IRQ_ENABLE_CLR_1
0x4740 1048 - 0x4740 106C	-	Reserved
0x4740 1070	USB0TXMODE	USB0 Tx Mode
0x4740 1074	USB0RXMODE	USB0 Rx Mode
0x4740 1078 - 0x4740 107C	-	Reserved
0x4740 1080	USB0GENRNDISEP1	USB0 Generic RNDIS Size EP1
0x4740 1084	USB0GENRNDISEP2	USB0 Generic RNDIS Size EP2
0x4740 1088	USB0GENRNDISEP3	USB0 Generic RNDIS Size EP3
0x4740 108C	USB0GENRNDISEP4	USB0 Generic RNDIS Size EP4
0x4740 1090	USB0GENRNDISEP5	USB0 Generic RNDIS Size EP5
0x4740 1094	USB0GENRNDISEP6	USB0 Generic RNDIS Size EP6
0x4740 1098	USB0GENRNDISEP7	USB0 Generic RNDIS Size EP7
0x4740 109C	USB0GENRNDISEP8	USB0 Generic RNDIS Size EP8
0x4740 10A0	USB0GENRNDISEP9	USB0 Generic RNDIS Size EP9
0x4740 10A4	USB0GENRNDISEP10	USB0 Generic RNDIS Size EP10
0x4740 10A8	USB0GENRNDISEP11	USB0 Generic RNDIS Size EP11
0x4740 10AC	USB0GENRNDISEP12	USB0 Generic RNDIS Size EP12
0x4740 10B0	USB0GENRNDISEP13	USB0 Generic RNDIS Size EP13
0x4740 10B4	USB0GENRNDISEP14	USB0 Generic RNDIS Size EP14
0x4740 10B8	USB0GENRNDISEP15	USB0 Generic RNDIS Size EP15
0x4740 10BC - 0x4740 10CC	-	Reserved
0x4740 10D0	USB0AUTOREQ	USB0 Auto Req
0x4740 10D4	USB0SRPFIXTIME	USB0 SRP Fix Time
0x4740 10D8	USB0TDOWN	USB0 Teardown
0x4740 10DC	-	Reserved
0x4740 10E0	USB0UTMI	USB0 PHY UTMI
0x4740 10E4	USB0UTMILB	USB0 MGC UTMI Loopback
0x4740 10E8	USB0MODE	USB0 Mode
0x4740 10E8 - 0x4740 13FF	-	Reserved
0x4740 1400 - 0x4740 1468	-	USB0 Mentor Core Registers/FIFOs
0x4740 146C	USB0_HWVERS	USB0 Mentor Core Hardware Version Register
0x4740 1470 - 0x4740 159C	-	USB0 Mentor Core Registers/FIFOs
0x4740 15A0 - 0x4740 17FC	-	Reserved

Copyright © 2011–2013, Texas Instruments Incorporated

Table 8-114. USB1 Controller Registers

HEX ADDRESS	ACRONYM	REGISTER NAME
0x4740 1800	USB1REV	USB1 Revision
0x4740 1804 - 0x4740 1810	-	Reserved
0x4740 1814	USB1CTRL	USB1 Control
0x4740 1818	USB1STAT	USB1 Status
0x4740 181C	-	Reserved
0x4740 1820	USB1IRQMSTAT	USB1 IRQ_MERGED_STATUS
0x4740 1824	USB1IRQEOI	USB1 IRQ_EOI
0x4740 1828	USB1IRQSTATRAW0	USB1 IRQ_STATUS_RAW_0
0x4740 182C	USB1IRQSTATRAW1	USB1 IRQ_STATUS_RAW_1
0x4740 1830	USB1IRQSTAT0	USB1 IRQ_STATUS_0
0x4740 1834	USB1IRQSTAT1	USB1 IRQ_STATUS_1
0x4740 1838	USB1IRQENABLESET0	USB1 IRQ_ENABLE_SET_0
0x4740 183C	USB1IRQENABLESET1	USB1 IRQ_ENABLE_SET_1
0x4740 1840	USB1IRQENABLECLR0	USB1 IRQ_ENABLE_CLR_0
0x4740 1844	USB1IRQENABLECLR1	USB1 IRQ_ENABLE_CLR_1
0x4740 1848 - 0x4740 186C	-	Reserved
0x4740 1870	USB1TXMODE	USB1 Tx Mode
0x4740 1874	USB1RXMODE	USB1 Rx Mode
0x4740 1878 - 0x4740 187C	-	Reserved
0x4740 1880	USB1GENRNDISEP1	USB1 Generic RNDIS Size EP1
0x4740 1884	USB1GENRNDISEP2	USB1 Generic RNDIS Size EP2
0x4740 1888	USB1GENRNDISEP3	USB1 Generic RNDIS Size EP3
0x4740 188C	USB1GENRNDISEP4	USB1 Generic RNDIS Size EP4
0x4740 1890	USB1GENRNDISEP5	USB1 Generic RNDIS Size EP5
0x4740 1894	USB1GENRNDISEP6	USB1 Generic RNDIS Size EP6
0x4740 1898	USB1GENRNDISEP7	USB1 Generic RNDIS Size EP7
0x4740 189C	USB1GENRNDISEP8	USB1 Generic RNDIS Size EP8
0x4740 18A0	USB1GENRNDISEP9	USB1 Generic RNDIS Size EP9
0x4740 18A4	USB1GENRNDISEP10	USB1 Generic RNDIS Size EP10
0x4740 18A8	USB1GENRNDISEP11	USB1 Generic RNDIS Size EP11
0x4740 18AC	USB1GENRNDISEP12	USB1 Generic RNDIS Size EP12
0x4740 18B0	USB1GENRNDISEP13	USB1 Generic RNDIS Size EP13
0x4740 18B4	USB1GENRNDISEP14	USB1 Generic RNDIS Size EP14
0x4740 18B8	USB1GENRNDISEP15	USB1 Generic RNDIS Size EP15
0x4740 18BC - 0x4740 18CC	-	Reserved
0x4740 18D0	USB1AUTOREQ	USB1 Auto Req
0x4740 18D4	USB1SRPFIXTIME	USB1 SRP Fix Time
0x4740 18D8	USB1TDOWN	USB1 Teardown
0x4740 18DC	-	Reserved
0x4740 18E0	USB1UTMI	USB1 PHY UTMI
0x4740 18E4	USB1UTMILB	USB1 MGC UTMI Loopback
0x4740 18E8	USB1MODE	USB1 Mode
0x4740 18E8 - 0x4740 1BFF	-	Reserved
0x4740 1C00 - 0x4740 1C68	-	USB1 Mentor Core Registers
0x4740 1C6C	USB1HWVERS	USB1 Mentor Core Hardware Version Register
0x4740 1C70 - 0x4740 1D9C	-	USB1 Mentor Core Registers
0x4740 1DA0 - 0x4740 1FFC	-	Reserved

Copyright © 2011–2013, Texas Instruments Incorporated

Table 8-115. CPPI DMA Controller Registers

HEX ADDRESS	ACRONYM	REGISTER NAME
0x4740 2000	DMAREVID	Revision Register
0x4740 2004	TDFDQ	Teardown Free Descriptor Queue Control
0x4740 2008	DMAEMU	Emulation Control Register
0x4740 200C	-	Reserved
0x4740 2010	DMAMEM1BA	CPPI Mem1 Base Address Register
0x4740 2014	DMAMEM1MASK	CPPI Mem1 Mask Address Register
0x4740 200C - 0x4740 27FF	-	Reserved
0x4740 2800	TXGCR0	Tx Channel 0 Global Configuration Register
0x4740 2804	-	Reserved
0x4740 2808	RXGCR0	Rx Channel 0 Global Configuration Register
0x4740 280C	RXHPCRA0	Rx Channel 0 Host Packet Configuration Register A
0x4740 2810	RXHPCRB0	Rx Channel 0 Host Packet Configuration Register B
0x4740 2814 - 0x4740 281C	-	Reserved
0x4740 2820	TXGCR1	Tx Channel 1 Global Configuration Register
0x4740 2824	-	Reserved
0x4740 2828	RXGCR1	Rx Channel 1 Global Configuration Register
0x4740 282C	RXHPCRA1	Rx Channel 1 Host Packet Configuration Register A
0x4740 2830	RXHPCRB1	Rx Channel 1 Host Packet Configuration Register B
0x4740 2834 - 0x4740 283C	-	Reserved
0x4740 2840	TXGCR2	Tx Channel 2 Global Configuration Register
0x4740 2844	-	Reserved
0x4740 2848	RXGCR2	Rx Channel 2 Global Configuration Register
0x4740 284C	RXHPCRA2	Rx Channel 2 Host Packet Configuration Register A
0x4740 2850	RXHPCRB2	Rx Channel 2 Host Packet Configuration Register B
0x4740 2854 - 0x4740 285F	-	Reserved
0x4740 2860	TXGCR3	Tx Channel 3 Global Configuration Register
0x4740 2864	-	Reserved
0x4740 2868	RXGCR3	Rx Channel 3 Global Configuration Register
0x4740 286C	RXHPCRA3	Rx Channel 3 Host Packet Configuration Register A
0x4740 2870	RXHPCRB3	Rx Channel 3 Host Packet Configuration Register B
0x4740 2880 - 0x4740 2B9F	-	...
0x4740 2BA0	TXGCR29	Tx Channel 29 Global Configuration Register
0x4740 2BA4	-	Reserved
0x4740 2BA8	RXGCR29	Rx Channel 29 Global Configuration Register
0x4740 2BAC	RXHPCRA29	Rx Channel 29 Host Packet Configuration Register A
0x4740 2BB0	RXHPCRB29	Rx Channel 29 Host Packet Configuration Register B
0x4740 2BB4 - 0x4740 2FFF	-	Reserved

Table 8-116. CPPI DMA Scheduler Registers

HEX ADDRESS	ACRONYM	REGISTER NAME
0x4740 3000	DMA_SCHED_CTRL	CPPI DMA Scheduler Control Register
0x4740 3804 - 0x4740 38FF	-	Reserved
0x4740 3800	WORD0	CPPI DMA Scheduler Table Word 0
0x4740 3804	WORD1	CPPI DMA Scheduler Table Word 1
…	…	…
0x4740 38F8	WORD62	CPPI DMA Scheduler Table Word 62
0x4740 38FC	WORD63	CPPI DMA Scheduler Table Word 63

Copyright © 2011–2013, Texas Instruments Incorporated

Table 8-116. CPPI DMA Scheduler Registers (continued)

HEX ADDRESS	ACRONYM	REGISTER NAME
0x4740 38FF - 0x4740 3FFF	-	Reserved

Table 8-117. CPPI DMA Queue Manager Registers

HEX ADDRESS	ACRONYM	REGISTER NAME
0x4740 4000	QMGRREVID	Queue Manager Revision
0x4740 4004	-	Reserved
0x4740 4008	DIVERSION	Queue Manager Queue Diversion
0x4740 400C - 0x4740 401F	-	Reserved
0x4740 4020	FDBSC0	Queue Manager Free Descriptor/Buffer Starvation Count 0
0x4740 4024	FDBSC1	Queue Manager Free Descriptor/Buffer Starvation Count 1
0x4740 4028	FDBSC2	Queue Manager Free Descriptor/Buffer Starvation Count 2
0x4740 402C	FDBSC3	Queue Manager Free Descriptor/Buffer Starvation Count 3
0x4740 4030	FDBSC4	Queue Manager Free Descriptor/Buffer Starvation Count 4
0x4740 4034	FDBSC5	Queue Manager Free Descriptor/Buffer Starvation Count 5
0x4740 4038	FDBSC6	Queue Manager Free Descriptor/Buffer Starvation Count 6
0x4740 403C	FDBSC7	Queue Manager Free Descriptor/Buffer Starvation Count 7
0x4740 4030 - 0x4740 407C	-	Reserved
0x4740 4080	LRAM0BASE	Queue Manager Linking RAM Region 0 Base Address
0x4740 4084	LRAM0SIZE	Queue Manager Linking RAM Region 0 Size
0x4740 4088	LRAM1BASE	Queue Manager Linking RAM Region 1 Base Address
0x4740 408C	-	Reserved
0x4740 4090	PEND0	Queue Manager Queue Pending 0
0x4740 4094	PEND1	Queue Manager Queue Pending 1
0x4740 4098	PEND2	Queue Manager Queue Pending 2
0x4740 409C	PEND3	Queue Manager Queue Pending 3
0x4740 40A0	PEND4	Queue Manager Queue Pending 4
0x4740 40A4 - 0x4740 4FFF	-	Reserved
0x4740 5000 + 16xR	QMEMRBASE0	Memory Region 0 Base Address (R ranges from 0 to 15)
0x4740 5000 + 16xR + 4	QMEMRCTRL0	Memory Region 0 Control 0 (R ranges from 0 to 15)
0x4740 5000 + 16xR + 8	-	Reserved
0x4740 5000 + 16xR + C	-	Reserved
0x4740 5010 – 0x4740 50EF	-	...
0x4740 5000 + 16xR	QMEMRBASE15	Memory Region 15 Base Address (R ranges from 0 to 15)
0x4740 5000 + 16xR + 4	QMEMRCTRL15	Memory Region 15 Control (R ranges from 0 to 15)
0x4740 5000 + 16xR + 8	-	Reserved
0x4740 5000 + 16xR + C	-	Reserved
0x4740 5080 - 0x4740 5FFF	-	Reserved
0x4740 6000 + 16xN	-	Reserved
0x4740 6000 + 16xN + 4	-	Reserved
0x4740 6000 + 16xN + 8	-	Reserved
0x4740 6000 + 16xN + C	CTRLD0	Queue N Register D (N ranges from 0 to 155)
0x4740 6010 – 0x4740 69AF	-	...
0x4740 6000 + 16xN	-	Reserved
0x4740 6000 + 16xN + 4	-	Reserved
0x4740 6000 + 16xN + 8	-	Reserved
0x4740 6000 + 16xN + C	CTRLD155	Queue N Register D (N ranges from 0 to 155)
0x4740 69B0 - 0x4740 6FFF	-	Reserved

Copyright © 2011–2013, Texas Instruments Incorporated

Table 8-117. CPPI DMA Queue Manager Registers (continued)

HEX ADDRESS	ACRONYM	REGISTER NAME
0x4740 7000 + 16xN	QSTATA0	Queue N Status A (N ranges from 0 to 155)
0x4740 7000 + 16xN + 4	QSTATB0	Queue N Status B (N ranges from 0 to 155)
0x4740 7000 + 16xN + 8	QSTATC0	Queue N Status C (N ranges from 0 to 155)
0x4740 7000 + 16xN + C	-	Reserved
0x4740 7010 – 0x4740 79AF	-	...
0x4740 7000 + 16xN	QSTATA155	Queue N Status A (N ranges from 0 to 155)
0x4740 7000 + 16xN + 4	QSTATB155	Queue N Status B (N ranges from 0 to 155)
0x4740 7000 + 16xN + 8	QSTATC155	Queue N Status C (N ranges from 0 to 155)
0x4740 7000 + 16xN + C	-	Reserved
0x4740 79B0 - 0x4740 7FFF	-	Reserved

Copyright © 2011–2013, Texas Instruments Incorporated

8.22.2 USB2.0 Electrical Data/Timing

Table 8-118. Switching Characteristics Over Recommended Operating Conditions for USB2.0

(see Figure 8-96)

NO.	PARAMETER		OPP100/120/166						UNIT
			LOW SPEED 1.5 Mbps		FULL SPEED 12 Mbps		HIGH SPEED 480 Mbps		
			MIN	MAX	MIN	MAX	MIN	MAX	
1	$t_{r(D)}$	Rise time, USBx_DP and USBx_DM signals (1)	75	300	4	20	0.5		ns
2	$t_{f(D)}$	Fall time, USBx_DP and USBx_DM signals (1)	75	300	4	20	0.5		ns
3	t_{rfM}	Rise/Fall time, matching (2)	80	125	90	111	–	–	%
4	V_{CRS}	Output signal cross-over voltage (1)	1.3	2	1.3	2	–	–	V
5	$t_{jr(source)NT}$	Source (Host) Driver jitter, next transition		2		2		(3)	ns
	$t_{jr(FUNC)NT}$	Function Driver jitter, next transition		25		2		(3)	ns
6	$t_{jr(source)PT}$	Source (Host) Driver jitter, paired transition (4)		1		1		(3)	ns
	$t_{jr(FUNC)PT}$	Function Driver jitter, paired transition		10		1		(3)	ns
7	$t_{w(EOPT)}$	Pulse duration, EOP transmitter	1250	1500	160	175	–	–	ns
8	$t_{w(EOPR)}$	Pulse duration, EOP receiver (5)	670		82		–		ns
9	$t_{(DRATE)}$	Data Rate		1.5		12		480	Mbps
10	Z_{DRV}	Driver Output Resistance	–	–	28	49.5	40.5	49.5	Ω
11	Z_{INP}	Receiver Input Impedance (6)	300		300	–	–	–	kΩ

(1) Low Speed: C_L = 200 pF, Full Speed: C_L = 50 pF, High Speed: C_L = 50 pF
(2) $t_{RFM} = (t_r/t_f) \times 100$. [Excluding the first transaction from the Idle state.]
(3) For more detailed information, see the Universal Serial Bus Specification Revision 2.0, Chapter 7, *Electrical*.
(4) $t_{jr} = t_{px(1)} - t_{px(0)}$
(5) Must accept as valid EOP.
(6) These values do not include the external resistors required per USB 2.0 specification.

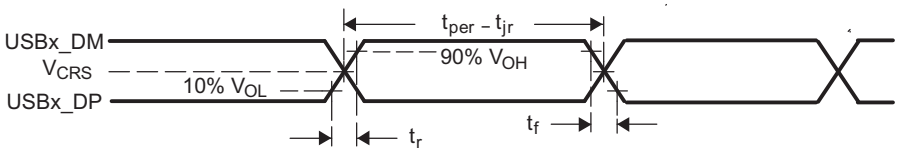

Figure 8-96. USB2.0 Integrated Transceiver Interface Timing

For more detailed information on USB2.0 board design, routing, and layout guidelines, see the *USB 2.0 Board Design and Layout Guidelines* Application Report (Literature Number: SPRAAR7).

9 Device and Documentation Support

9.1 Device Support

9.1.1 Development Support

TI offers an extensive line of development tools, including tools to evaluate the performance of the processors, generate code, develop algorithm implementations, and fully integrate and debug software and hardware modules. The support documentation for the tools is electronically available within the Code Composer Studio™ Integrated Development Environment (IDE).

The following products support development of TMS320DM814x processor applications:

Software Development Tools: Code Composer Studio™ Integrated Development Environment (IDE): including Editor C/C++/Assembly Code Generation, and Debug plus additional development tools Scalable, Real-Time Foundation Software (DSP/BIOS™), which provides the basic run-time target software needed to support any DaVinci Digital Media Processor application.

Hardware Development Tools: Extended Development System (XDS™) Emulator

For a complete listing of development-support tools for the DM814x DaVinci™ Digital Media Processor platform, visit the Texas Instruments website at www.ti.com. For information on pricing and availability, contact the nearest TI field sales office or authorized distributor.

9.1.2 Device and Development-Support Tool Nomenclature

To designate the stages in the product development cycle, TI assigns prefixes to the part numbers of all DSP + ARM devices and support tools. Each DSP + ARM commercial family member has one of three prefixes: TMX, TMP, or TMS (for example, TMX320DM8148BCYE0). Texas Instruments recommends two of three possible prefix designators for its support tools: TMDX and TMDS. These prefixes represent evolutionary stages of product development from engineering prototypes (TMX/TMDX) through fully qualified production devices/tools (TMS/TMDS).

Device development evolutionary flow:

TMX Experimental device that is not necessarily representative of the final device's electrical specifications.

TMP Final silicon die that conforms to the device's electrical specifications but has not completed quality and reliability verification.

TMS Fully-qualified production device.

Support tool development evolutionary flow:

TMDX Development-support product that has not yet completed Texas Instruments internal qualification testing.

TMDS Fully qualified development-support product.

TMX and TMP devices and TMDX development-support tools are shipped against the following disclaimer:

"Developmental product is intended for internal evaluation purposes."

TMS devices and TMDS development-support tools have been characterized fully, and the quality and reliability of the device have been demonstrated fully. TI's standard warranty applies.

Predictions show that prototype devices (TMX or TMP) have a greater failure rate than the standard production devices. Texas Instruments recommends that these devices not be used in any production system because their expected end-use failure rate still is undefined. Only qualified production devices are to be used.

 Copyright © 2011–2013, Texas Instruments Incorporated

TI device nomenclature also includes a suffix with the device family name. This suffix indicates the package type (for example, CYE), the temperature range (for example, "Blank" is the commercial temperature range), and the device speed range in megahertz (for example, "Blank" is the default [600-MHz ARM, 500-MHz DSP]).

Figure 9-1 provides a legend for reading the complete device name for any TMS320DM814x platform member.

For device part numbers and further ordering information of TMS320DM814x devices in the CYE package type, see the TI website (www.ti.com) or contact your TI sales representative.

For additional description of the device nomenclature markings on the die, see the *TMS320DM814x DaVinci™ Digital Media Processors Silicon Errata (Silicon Revision 2.1)* (Literature Number: SPRZ343).

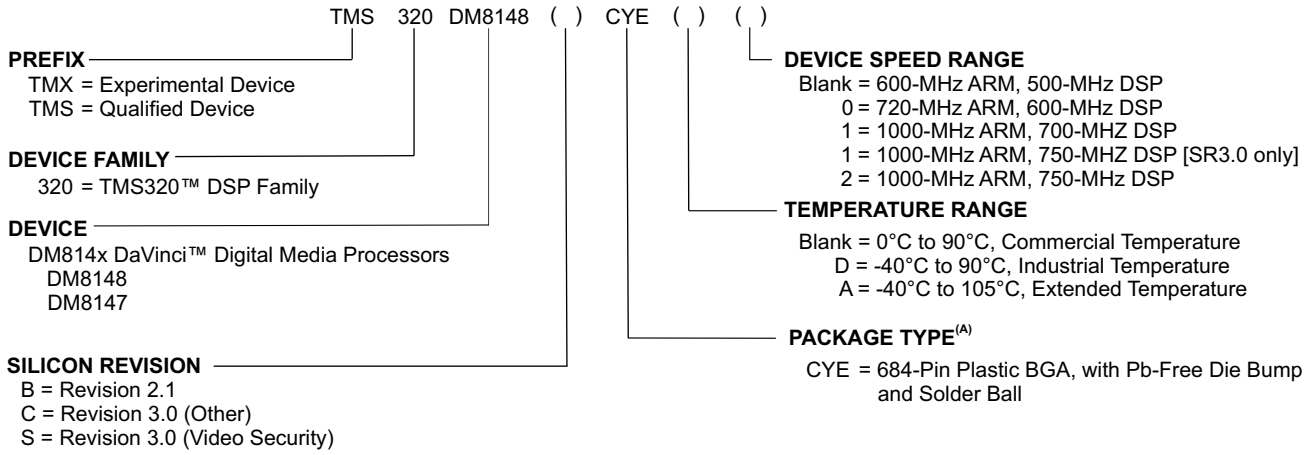

A. BGA = Ball Grid Array
B. For actual device part numbers (P/Ns) and ordering information, see the TI website (http://www.ti.com).
C. The TEMPERATURE RANGE values are specified over operating junction temperature.

Figure 9-1. Device Nomenclature(B)(C)

9.2 Documentation Support

The following document describes the DM814x DaVinci™ Digital Media Processors.

SPRUGZ8 ***TMS320DM814x DaVinci Digital Media Processors Technical Reference Manual.***

9.3 Community Resources

The following links connect to TI community resources. Linked contents are provided "AS IS" by the respective contributors. They do not constitute TI specifications and do not necessarily reflect TI's views; see TI's Terms of Use.

TI E2E Community ***TI's Engineer-to-Engineer (E2E) Community.*** Created to foster collaboration among engineers. At e2e.ti.com, you can ask questions, share knowledge, explore ideas and help solve problems with fellow engineers.

TI Embedded Processors Wiki ***Texas Instruments Embedded Processors Wiki.*** Established to help developers get started with Embedded Processors from Texas Instruments and to foster innovation and growth of general knowledge about the hardware and software surrounding these devices.

10 Mechanical

The device package has been specially engineered with a new technology called Via Channel™. The Via Channel technology allows larger than normal PCB via sizes and reduced PCB signal layers to be used in a PCB design with this 0.8-mm pitch package, and will substantially reduce PCB costs. Via Channel also allows PCB routing in only two signal layers (four layers total) due to the increased layer efficiency of the Via Channel™ BGA technology.

10.1 Thermal Data for CYE-04 (Top Hat)

Table 10-1. Thermal Resistance Characteristics (PBGA Package) [CYE-04] (Thinner Top Hat)

NO.			°C/W(1)	AIR FLOW (m/s)(2)
1	$R\Theta_{JC}$	Junction-to-case	0.39	N/A
2	$R\Theta_{JB}$	Junction-to-board	3.87	N/A
3	$R\Theta_{JA}$	Junction-to-free air	11.67	0.00
5	$R\Theta_{JMA}$	Junction-to-moving air	8.59	1.00
6			7.80	2.00
7			7.33	3.00
8	Psi_{JT}	Junction-to-package top	0.19	0.00
10			0.20	1.00
11			0.20	2.00
12			0.21	3.00
13	Psi_{JB}	Junction-to-board	3.44	0.00
15			3.37	1.00
16			3.26	2.00
17			3.17	3.00

(1) These measurements were conducted in a JEDEC defined 2S2P system (with the exception of the Theta JC [$R\Theta_{JC}$] measurement, which was conducted in a JEDEC defined 1S0P system) and will change based on environment as well as application. For more information, see these EIA/JEDEC standards:
- JESD51-2, *Integrated Circuits Thermal Test Method Environment Conditions - Natural Convection (Still Air)*
- JESD51-3, *Low Effective Thermal Conductivity Test Board for Leaded Surface Mount Packages*
- JESD51-7, *High Effective Thermal Conductivity Test Board for Leaded Surface Mount Packages*
- JESD51-9, *Test Boards for Area Array Surface Mount Packages*

Power dissipation of 2 W and an ambient temperature of 70ºC is assumed.

(2) m/s = meters per second

10.2 Packaging Information

The following packaging information and addendum reflect the most current data available for the designated device(s). This data is subject to change without notice and without revision of this document.

Copyright © 2011–2013, Texas Instruments Incorporated

PACKAGING INFORMATION

Orderable part number	Status (1)	Material type (2)	Package | Pins	Package qty | Carrier	RoHS (3)	Lead finish/ Ball material (4)	MSL rating/ Peak reflow (5)	Op temp (°C)	Part marking (6)
DM8147SCIS0	Active	Production	FCBGA (CYE) | 684	60 | JEDEC TRAY (5+1)	Yes	Call TI	Level-4-250C-72 HR	0 to 90	TMS320DM8147SCYE0 662
MTDM8148CCYE2	Active	Production	FCBGA (CYE) | 684	60 | JEDEC TRAY (5+1)	Yes	Call TI	Level-4-250C-72 HR	0 to 90	TMS320DM8148CCYE2 662
TMS320DM8147SCYE0	Active	Production	FCBGA (CYE) | 684	60 | JEDEC TRAY (5+1)	Yes	Call TI	Level-4-250C-72 HR	0 to 90	TMS320DM8147SCYE0 662
TMS320DM8147SCYE0.B	Active	Production	FCBGA (CYE) | 684	60 | JEDEC TRAY (5+1)	Yes	Call TI	Level-4-250C-72 HR	0 to 90	TMS320DM8147SCYE0 662
TMS320DM8147SCYE1	Active	Production	FCBGA (CYE) | 684	60 | JEDEC TRAY (5+1)	Yes	Call TI	Level-4-250C-72 HR	0 to 90	TMS320DM8147SCYE1 662
TMS320DM8147SCYE1.B	Active	Production	FCBGA (CYE) | 684	60 | JEDEC TRAY (5+1)	Yes	Call TI	Level-4-250C-72 HR	0 to 90	TMS320DM8147SCYE1 662
TMS320DM8147SCYE2	Active	Production	FCBGA (CYE) | 684	60 | JEDEC TRAY (5+1)	Yes	Call TI	Level-4-250C-72 HR	0 to 90	TMS320DM8147SCYE2 662
TMS320DM8147SCYE2.B	Active	Production	FCBGA (CYE) | 684	60 | JEDEC TRAY (5+1)	Yes	Call TI	Level-4-250C-72 HR	0 to 90	TMS320DM8147SCYE2 662
TMS320DM8148CCYE0	Active	Production	FCBGA (CYE) | 684	60 | JEDEC TRAY (5+1)	Yes	Call TI	Level-4-250C-72 HR	0 to 90	TMS320DM8148CCYE0 662
TMS320DM8148CCYE0.B	Active	Production	FCBGA (CYE) | 684	60 | JEDEC TRAY (5+1)	Yes	Call TI	Level-4-250C-72 HR	0 to 90	TMS320DM8148CCYE0 662
TMS320DM8148CCYE1	Active	Production	FCBGA (CYE) | 684	60 | JEDEC TRAY (5+1)	Yes	Call TI	Level-4-250C-72 HR	0 to 90	TMS320DM8148CCYE1 662
TMS320DM8148CCYE1.B	Active	Production	FCBGA (CYE) | 684	60 | JEDEC TRAY (5+1)	Yes	Call TI	Level-4-250C-72 HR	0 to 90	TMS320DM8148CCYE1 662
TMS320DM8148CCYE2	Active	Production	FCBGA (CYE) | 684	60 | JEDEC TRAY (5+1)	Yes	Call TI	Level-4-250C-72 HR	0 to 90	TMS320DM8148CCYE2 662
TMS320DM8148CCYE2.B	Active	Production	FCBGA (CYE) | 684	60 | JEDEC TRAY (5+1)	Yes	Call TI	Level-4-250C-72 HR	0 to 90	TMS320DM8148CCYE2 662
TMS320DM8148CCYEA0	Active	Production	FCBGA (CYE) | 684	60 | JEDEC TRAY (5+1)	Yes	SNAGCU	Level-4-250C-72 HR	0 to 90	TMS320DM8148CCYEA0 662
TMS320DM8148CCYEA0.B	Active	Production	FCBGA (CYE) | 684	60 | JEDEC TRAY (5+1)	Yes	SNAGCU	Level-4-250C-72 HR	0 to 90	TMS320DM8148CCYEA0 662

Orderable part number	Status (1)	Material type (2)	Package | Pins	Package qty | Carrier	RoHS (3)	Lead finish/ Ball material (4)	MSL rating/ Peak reflow (5)	Op temp (°C)	Part marking (6)
TMS320DM8148SCYE0	Active	Production	FCBGA (CYE) | 684	60 | JEDEC TRAY (5+1)	Yes	Call TI	Level-4-250C-72 HR	0 to 90	TMS320DM8148SCYE0
TMS320DM8148SCYE0.B	Active	Production	FCBGA (CYE) | 684	60 | JEDEC TRAY (5+1)	Yes	Call TI	Level-4-250C-72 HR	0 to 90	TMS320DM8148SCYE0
TMS320DM8148SCYE1	Active	Production	FCBGA (CYE) | 684	60 | JEDEC TRAY (5+1)	Yes	Call TI	Level-4-250C-72 HR	0 to 90	TMS320DM8148SCYE1 662
TMS320DM8148SCYE1.B	Active	Production	FCBGA (CYE) | 684	60 | JEDEC TRAY (5+1)	Yes	Call TI	Level-4-250C-72 HR	0 to 90	TMS320DM8148SCYE1 662
TMS320DM8148SCYE2	Active	Production	FCBGA (CYE) | 684	60 | JEDEC TRAY (5+1)	Yes	Call TI	Level-4-250C-72 HR	0 to 90	TMS320DM8148SCYE2 662
TMS320DM8148SCYE2.B	Active	Production	FCBGA (CYE) | 684	60 | JEDEC TRAY (5+1)	Yes	Call TI	Level-4-250C-72 HR	0 to 90	TMS320DM8148SCYE2 662
TMS320DM8148SCYEA0	Active	Production	FCBGA (CYE) | 684	60 | JEDEC TRAY (5+1)	Yes	SNAGCU	Level-4-250C-72 HR	0 to 90	TMS320DM8148SCYEA0 662
TMS320DM8148SCYEA0.B	Active	Production	FCBGA (CYE) | 684	60 | JEDEC TRAY (5+1)	Yes	SNAGCU	Level-4-250C-72 HR	0 to 90	TMS320DM8148SCYEA0 662

(1) **Status:** For more details on status, see our product life cycle.

(2) **Material type:** When designated, preproduction parts are prototypes/experimental devices, and are not yet approved or released for full production. Testing and final process, including without limitation quality assurance, reliability performance testing, and/or process qualification, may not yet be complete, and this item is subject to further changes or possible discontinuation. If available for ordering, purchases will be subject to an additional waiver at checkout, and are intended for early internal evaluation purposes only. These items are sold without warranties of any kind.

(3) **RoHS values:** Yes, No, RoHS Exempt. See the TI RoHS Statement for additional information and value definition.

(4) **Lead finish/Ball material:** Parts may have multiple material finish options. Finish options are separated by a vertical ruled line. Lead finish/Ball material values may wrap to two lines if the finish value exceeds the maximum column width.

(5) **MSL rating/Peak reflow:** The moisture sensitivity level ratings and peak solder (reflow) temperatures. In the event that a part has multiple moisture sensitivity ratings, only the lowest level per JEDEC standards is shown. Refer to the shipping label for the actual reflow temperature that will be used to mount the part to the printed circuit board.

(6) **Part marking:** There may be an additional marking, which relates to the logo, the lot trace code information, or the environmental category of the part.

Multiple part markings will be inside parentheses. Only one part marking contained in parentheses and separated by a "~" will appear on a part. If a line is indented then it is a continuation of the previous line and the two combined represent the entire part marking for that device.

Important Information and Disclaimer: The information provided on this page represents TI's knowledge and belief as of the date that it is provided. TI bases its knowledge and belief on information provided by third parties, and makes no representation or warranty as to the accuracy of such information. Efforts are underway to better integrate information from third parties. TI has taken and continues to take reasonable steps to provide representative and accurate information but may not have conducted destructive testing or chemical analysis on incoming materials and chemicals. TI and TI suppliers consider certain information to be proprietary, and thus CAS numbers and other limited information may not be available for release.

In no event shall TI's liability arising out of such information exceed the total purchase price of the TI part(s) at issue in this document sold by TI to Customer on an annual basis.

TRAY

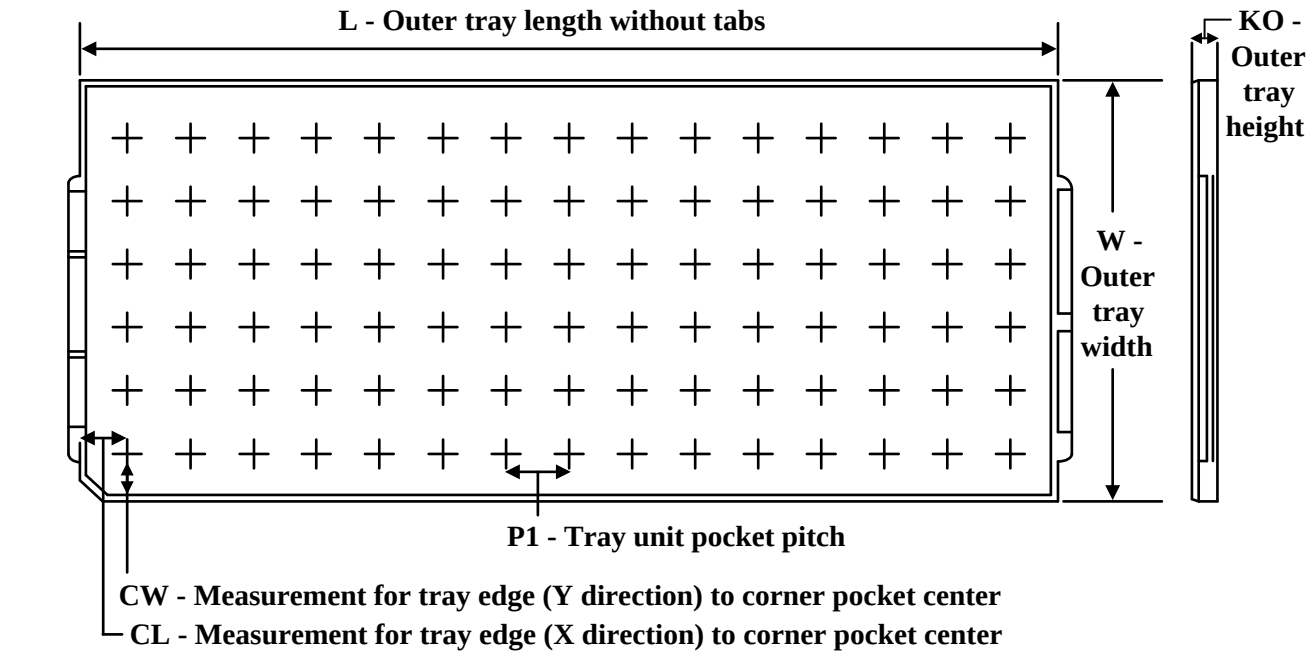

Chamfer on Tray corner indicates Pin 1 orientation of packed units.

*All dimensions are nominal

Device	Package Name	Package Type	Pins	SPQ	Unit array matrix	Max temperature (°C)	L (mm)	W (mm)	K0 (µm)	P1 (mm)	CL (mm)	CW (mm)
DM8147SCIS0	CYE	FCBGA	684	60	5 X 12	150	315	135.9	12190	25.5	17.25	16.95
MTDM8148CCYE2	CYE	FCBGA	684	60	5 X 12	150	315	135.9	12190	25.5	17.25	16.95
TMS320DM8147SCYE0	CYE	FCBGA	684	60	5 X 12	150	315	135.9	12190	25.5	17.25	16.95
TMS320DM8147SCYE0.B	CYE	FCBGA	684	60	5 X 12	150	315	135.9	12190	25.5	17.25	16.95
TMS320DM8147SCYE1	CYE	FCBGA	684	60	5 X 12	150	315	135.9	12190	25.5	17.25	16.95
TMS320DM8147SCYE1.B	CYE	FCBGA	684	60	5 X 12	150	315	135.9	12190	25.5	17.25	16.95
TMS320DM8147SCYE2	CYE	FCBGA	684	60	5 X 12	150	315	135.9	12190	25.5	17.25	16.95
TMS320DM8147SCYE2.B	CYE	FCBGA	684	60	5 X 12	150	315	135.9	12190	25.5	17.25	16.95
TMS320DM8148CCYE0	CYE	FCBGA	684	60	5 X 12	150	315	135.9	12190	25.5	17.25	16.95
TMS320DM8148CCYE0.B	CYE	FCBGA	684	60	5 X 12	150	315	135.9	12190	25.5	17.25	16.95
TMS320DM8148CCYE1	CYE	FCBGA	684	60	5 X 12	150	315	135.9	12190	25.5	17.25	16.95
TMS320DM8148CCYE1.B	CYE	FCBGA	684	60	5 X 12	150	315	135.9	12190	25.5	17.25	16.95
TMS320DM8148CCYE2	CYE	FCBGA	684	60	5 X 12	150	315	135.9	12190	25.5	17.25	16.95
TMS320DM8148CCYE2.B	CYE	FCBGA	684	60	5 X 12	150	315	135.9	12190	25.5	17.25	16.95
TMS320DM8148CCYEA0	CYE	FCBGA	684	60	5 X 12	150	315	135.9	12190	25.5	17.25	16.95
TMS320DM8148CCYEA0.B	CYE	FCBGA	684	60	5 X 12	150	315	135.9	12190	25.5	17.25	16.95
TMS320DM8148SCYE0	CYE	FCBGA	684	60	5 X 12	150	315	135.9	12190	25.5	17.25	16.95

Device	Package Name	Package Type	Pins	SPQ	Unit array matrix	Max temperature (°C)	L (mm)	W (mm)	K0 (µm)	P1 (mm)	CL (mm)	CW (mm)
TMS320DM8148SCYE0.B	CYE	FCBGA	684	60	5 X 12	150	315	135.9	12190	25.5	17.25	16.95
TMS320DM8148SCYE1	CYE	FCBGA	684	60	5 X 12	150	315	135.9	12190	25.5	17.25	16.95
TMS320DM8148SCYE1.B	CYE	FCBGA	684	60	5 X 12	150	315	135.9	12190	25.5	17.25	16.95
TMS320DM8148SCYE2	CYE	FCBGA	684	60	5 X 12	150	315	135.9	12190	25.5	17.25	16.95
TMS320DM8148SCYE2.B	CYE	FCBGA	684	60	5 X 12	150	315	135.9	12190	25.5	17.25	16.95
TMS320DM8148SCYEA0	CYE	FCBGA	684	60	5 X 12	150	315	135.9	12190	25.5	17.25	16.95
TMS320DM8148SCYEA0.B	CYE	FCBGA	684	60	5 X 12	150	315	135.9	12190	25.5	17.25	16.95

CYE (S–PBGA–N684) PLASTIC BALL GRID ARRAY

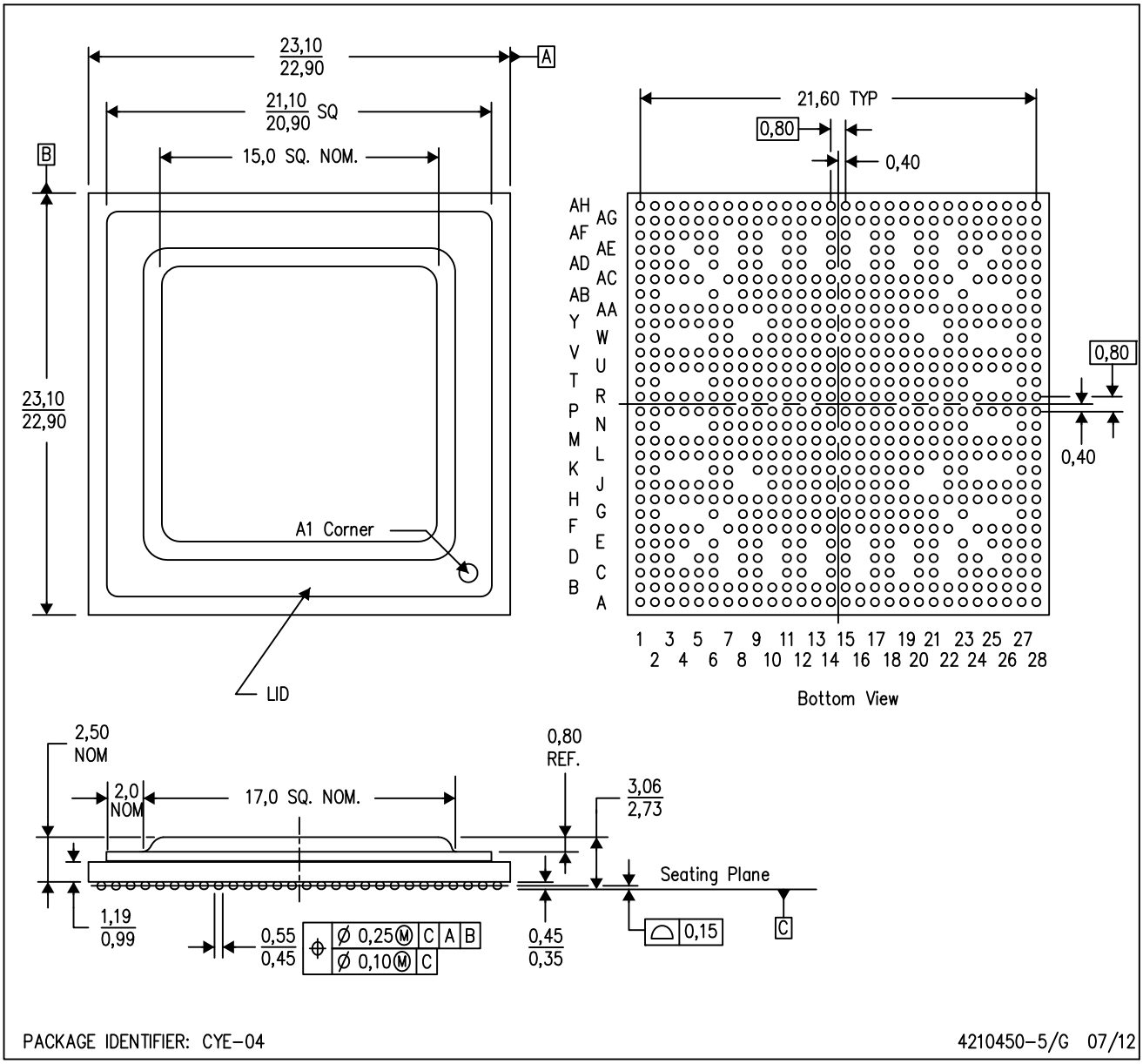

NOTES:
- A. All linear dimensions are in millimeters. Dimensioning and tolerancing per ASME Y14.5M–1994.
- B. This drawing is subject to change without notice.
- C. Flip chip application only.
- D. Thermally enhanced plastic package with lid.
- E. Pb–free die bump and solder ball.

IMPORTANT NOTICE AND DISCLAIMER

TI PROVIDES TECHNICAL AND RELIABILITY DATA (INCLUDING DATASHEETS), DESIGN RESOURCES (INCLUDING REFERENCE DESIGNS), APPLICATION OR OTHER DESIGN ADVICE, WEB TOOLS, SAFETY INFORMATION, AND OTHER RESOURCES “AS IS” AND WITH ALL FAULTS, AND DISCLAIMS ALL WARRANTIES, EXPRESS AND IMPLIED, INCLUDING WITHOUT LIMITATION ANY IMPLIED WARRANTIES OF MERCHANTABILITY, FITNESS FOR A PARTICULAR PURPOSE OR NON-INFRINGEMENT OF THIRD PARTY INTELLECTUAL PROPERTY RIGHTS.

These resources are intended for skilled developers designing with TI products. You are solely responsible for (1) selecting the appropriate TI products for your application, (2) designing, validating and testing your application, and (3) ensuring your application meets applicable standards, and any other safety, security, regulatory or other requirements.

These resources are subject to change without notice. TI grants you permission to use these resources only for development of an application that uses the TI products described in the resource. Other reproduction and display of these resources is prohibited. No license is granted to any other TI intellectual property right or to any third party intellectual property right. TI disclaims responsibility for, and you fully indemnify TI and its representatives against any claims, damages, costs, losses, and liabilities arising out of your use of these resources.

TI’s products are provided subject to TI’s Terms of Sale, TI’s General Quality Guidelines, or other applicable terms available either on ti.com or provided in conjunction with such TI products. TI’s provision of these resources does not expand or otherwise alter TI’s applicable warranties or warranty disclaimers for TI products. Unless TI explicitly designates a product as custom or customer-specified, TI products are standard, catalog, general purpose devices.

TI objects to and rejects any additional or different terms you may propose.

Copyright © 2026, Texas Instruments Incorporated

Last updated 10/2025