TPD1E01B04 1-Channel ESD Protection Diode for USB Type-C and Thunderbolt 3

1 Features

- IEC 61000-4-2 Level 4 ESD Protection
  - ±15-kV Contact Discharge
  - ±17-kV Air Gap Discharge
- IEC 61000-4-4 EFT Protection
  - 80 A (5/50 ns)
- IEC 61000-4-5 Surge Protection
  - 2.5 A (8/20 µs)
- IO Capacitance:
  - 0.18 to 0.20 pF (Typical)
  - 0.20 to 0.23 pF (Maximum)
- DC Breakdown Voltage: 6.4 V (Typical)
- Ultra Low Leakage Current: 10-nA (Maximum)
- Low ESD Clamping Voltage: 15 V at 16 A TLP
- Low Insertion Loss: 26.9 GHz (–3 dB Bandwidth, DPL)
- Supports High Speed Interfaces up to 20 Gbps
- Industrial Temperature Range: –40°C to +125°C
- Industry Standard 0201 and 0402 footprints

2 Applications

- End Equipment
  - Laptops and Desktops
  - Mobile and Tablets
  - Set-Top Boxes
  - TV and Monitors
  - USB Dongles
  - Docking Stations
- Interfaces
  - USB Type-C
  - Thunderbolt 3
  - USB 3.1 Gen 2
  - HDMI 2.0/1.4
  - USB 3.0
  - DisplayPort 1.3
  - PCI Express 3

3 Description

The TPD1E01B04 is a bidirectional TVS ESD protection diode array for USB Type-C and Thunderbolt 3 circuit protection. The TPD1E01B04 is rated to dissipate ESD strikes at the maximum level specified in the IEC 61000-4-2 international standard (Level 4).

This device features a 0.18 to 0.20-pF (typical) IO capacitance making it ideal for protecting high-speed interfaces up to 20 Gbps such as USB 3.1 Gen2 and Thunderbolt 3. The low dynamic resistance and low clamping voltage ensure system level protection against transient events.

The TPD1E01B04 is offered in the industry standard 0201 (DPL) package and 0402 (DPY) packages.

Device Information(1)

PART NUMBER	PACKAGE	BODY SIZE (NOM)
TPD1E01B04	X2SON (2)	0.60 mm x 0.30 mm
	X1SON (2)	1.00 mm x 0.60 mm

(1) For all available packages, see the orderable addendum at the end of the data sheet.

Typical Application

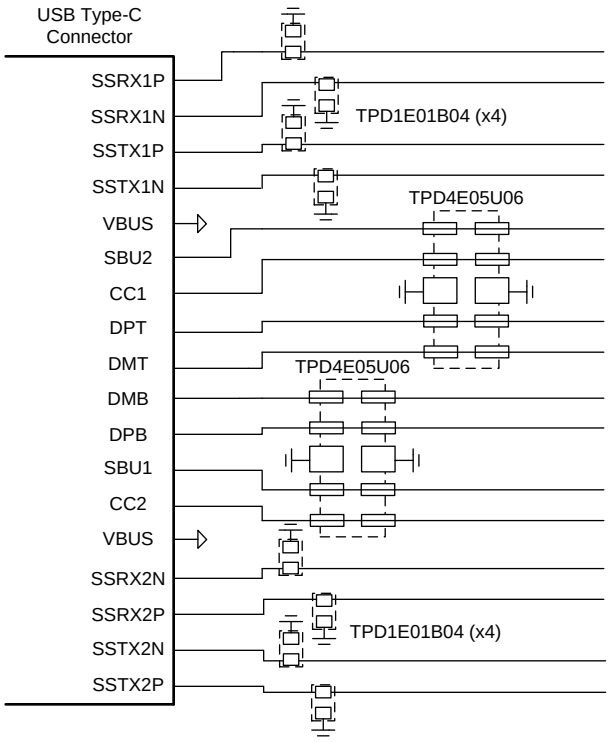

Copyright © 2016, Texas Instruments Incorporated

An IMPORTANT NOTICE at the end of this data sheet addresses availability, warranty, changes, use in safety-critical applications, intellectual property matters and other important disclaimers. PRODUCTION DATA.

Table of Contents

1 Features ... 1
2 Applications ... 1
3 Description ... 1
4 Revision History ... 2
5 Pin Configuration and Functions ... 3
6 Specifications ... 4
6.1 Absolute Maximum Ratings ... 4
6.2 ESD Ratings ... 4
6.3 ESD Ratings—IEC Specification ... 4
6.4 Recommended Operating Conditions ... 4
6.5 Thermal Information ... 4
6.6 Electrical Characteristics ... 5
6.7 Typical Characteristics ... 6
7 Detailed Description ... 9
7.1 Overview ... 9
7.2 Functional Block Diagram ... 9
7.3 Feature Description ... 9
7.4 Device Functional Modes ... 10
8 Application and Implementation ... 11
8.1 Application Information ... 11
8.2 Typical Application ... 11
9 Power Supply Recommendations ... 14
10 Layout ... 14
10.1 Layout Guidelines ... 14
10.2 Layout Example ... 14
11 Device and Documentation Support ... 15
11.1 Documentation Support ... 15
11.2 Community Resources ... 15
11.3 Trademarks ... 15
11.4 Electrostatic Discharge Caution ... 15
11.5 Glossary ... 15
12 Mechanical, Packaging, and Orderable Information ... 15

4 Revision History

NOTE: Page numbers for previous revisions may differ from page numbers in the current version.

Changes from Revision B (May 2016) to Revision C	Page
• Added "and 0402 (DPY) packages." to the *Description*, and package "X1SON (2)" to the *Device Information* table	1
• Added the DPY Package to the *Pin Configuration and Functions*	3
• Added the DPY (X1SON) package to the *Thermal Information* table	4
• Added DPY values to C_L Line capacitance in the *Electrical Characteristics* table	5
• Added "(DPL Package)" to the title of Figure 6	6
• Added Figure 7	6
• Added curves for the DPY package to Figure 10 and Figure 11	6
• Added curve for the DPY package to Figure 17	13

Changes from Revision A (March 2016) to Revision B	Page
• Made changes to the *Electrical Characteristics* table. Updated limits for V_{HOLD}	1

Changes from Original (March 2016) to Revision A	Page
• Changed device status from *Product Preview* to *Production Data*	1

Copyright © 2016, Texas Instruments Incorporated

5 Pin Configuration and Functions

DPL Package
2-Pin X2SON
Top View

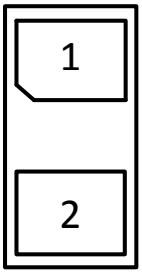

DPY Package
2-Pin X1SON
Top View

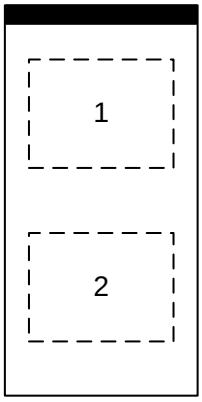

Pin Functions

PIN		TYPE	DESCRIPTION
NO.	NAME		
1	IO	I/O	ESD Protected Channel. If used as ESD IO, connect pin 2 to ground
2	IO	I/O	ESD Protected Channel. If used as ESD IO, connect pin 1 to ground

6 Specifications

6.1 Absolute Maximum Ratings

over operating free-air temperature range (unless otherwise noted)[1]

		MIN	MAX	UNIT
Electrical fast transient	IEC 61000-4-5 (5/50 ns)		80	A
Peak pulse	IEC 61000-4-5 power (t_p - 8/20 µs)		27	W
	IEC 61000-4-5 current (t_p - 8/20 µs)		2.5	A
T_A	Operating free-air temperature	–40	125	°C
T_{stg}	Storage temperature	–65	155	°C

(1) Stresses beyond those listed under *Absolute Maximum Ratings* may cause permanent damage to the device. These are stress ratings only, which do not imply functional operation of the device at these or any other conditions beyond those indicated under *Recommended Operating Conditions*. Exposure to absolute-maximum-rated conditions for extended periods may affect device reliability.

6.2 ESD Ratings

		VALUE	UNIT
$V_{(ESD)}$ Electrostatic discharge	Human-body model (HBM), per ANSI/ESDA/JEDEC JS-001[1]	±2500	V
	Charged-device model (CDM), per JEDEC specification JESD22-C101[2]	±1000	

(1) JEDEC document JEP155 states that 500-V HBM allows safe manufacturing with a standard ESD control process.
(2) JEDEC document JEP157 states that 250-V CDM allows safe manufacturing with a standard ESD control process.

6.3 ESD Ratings—IEC Specification

		VALUE	UNIT
$V_{(ESD)}$ Electrostatic discharge	IEC 61000-4-2 contact discharge	±15000	V
	IEC 61000-4-2 air-gap discharge	±17000	

6.4 Recommended Operating Conditions

over operating free-air temperature range (unless otherwise noted)

		MIN	MAX	UNIT
V_{IO}	Input pin voltage	–3.6	3.6	V
T_A	Operating free-air temperature	–40	125	°C

6.5 Thermal Information

THERMAL METRIC[1]		TPD1E01B04		UNIT
		DPL (X2SON)	DPY (X1SON)	
		2 PINS	2 PINS	
$R_{\theta JA}$	Junction-to-ambient thermal resistance	582	442.6	°C/W
$R_{\theta JC(top)}$	Junction-to-case (top) thermal resistance	264.5	243.8	°C/W
$R_{\theta JB}$	Junction-to-board thermal resistance	394.4	162.5	°C/W
ψ_{JT}	Junction-to-top characterization parameter	36.4	154.1	°C/W
ψ_{JB}	Junction-to-board characterization parameter	394.4	163.0	°C/W
$R_{\theta JC(bot)}$	Junction-to-case (bottom) thermal resistance	n/a	n/a	°C/W

(1) For more information about traditional and new thermal metrics, see the *Semiconductor and IC Package Thermal Metrics* application report.

Copyright © 2016, Texas Instruments Incorporated

6.6 Electrical Characteristics

over operating free-air temperature range (unless otherwise noted)

PARAMETER			TEST CONDITIONS	MIN	TYP	MAX	UNIT
V_{RWM}	Reverse stand-off voltage		I_{IO} < 10 nA	–3.6		3.6	V
V_{BRF}	Breakdown voltage, IO pin to GND		Measured as the maximum voltage before device snaps back into V_{HOLD} voltage		6.4		V
V_{BRR}	Breakdown voltage, GND to IO pin				–6.4		V
V_{HOLD}	Holding voltage		I_{IO} = 1 mA, T_A = 25°C	5	5.9	6.5	V
V_{CLAMP}	Clamping voltage		I_{PP} = 1 A, TLP, from IO to GND		7		V
			I_{PP} = 5 A, TLP, from IO to GND		9.2		
			I_{PP} = 16 A, TLP, from IO to GND		15		
			I_{PP} = 1 A, TLP, from GND to IO		7		
			I_{PP} = 5 A, TLP, from GND to IO		9.2		
			I_{PP} = 16 A, TLP, from GND to IO		15		
I_{LEAK}	Leakage current, IO to GND		V_{IO} = ±2.5 V			10	nA
R_{DYN}	Dynamic resistance		IO to GND		0.57		Ω
			GND to IO		0.57		
C_L	Line capacitance	DPL Package	V_{IO} = 0 V, f = 1 MHz, IO to GND T_A = 25°C		0.18	0.20	pF
		DPY Package			0.20	0.23	

6.7 Typical Characteristics

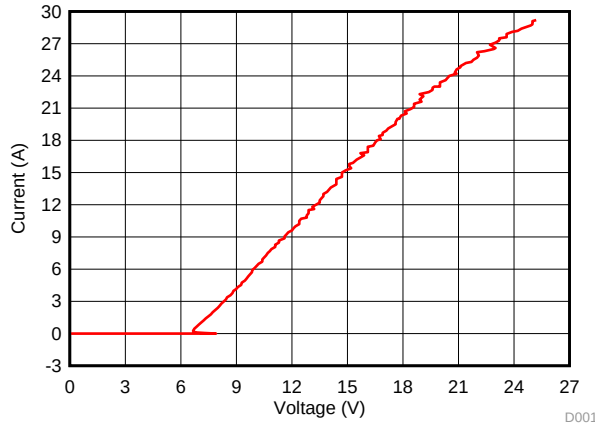

Figure 1. Positive TLP Curve

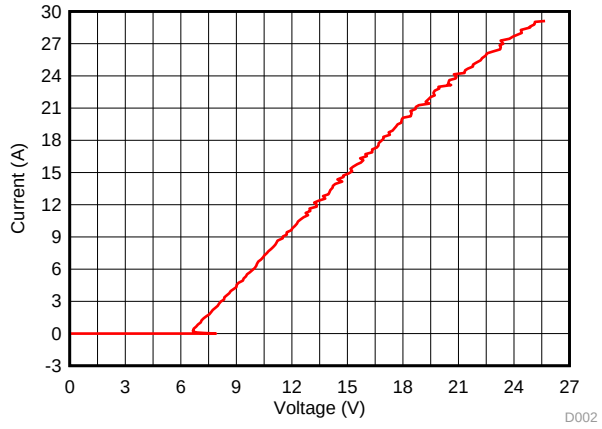

Figure 2. Negative TLP Curve

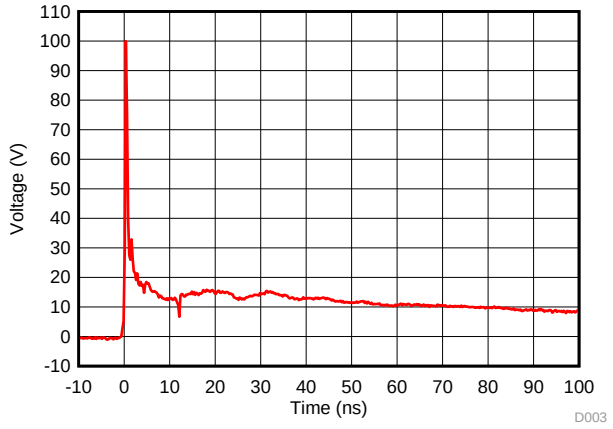

Figure 3. 8-kV IEC Waveform

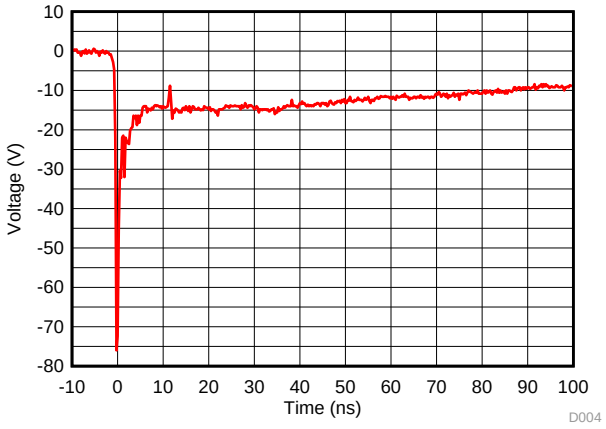

Figure 4. –8-kV IEC Waveform

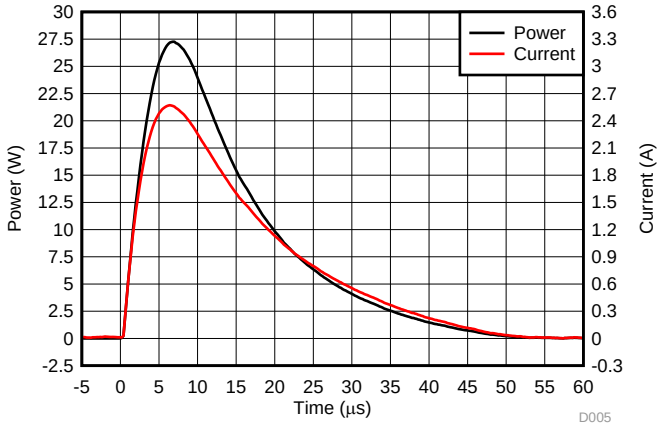

Figure 5. Surge Curve (t_p = 8/20µs), IO pin to GND

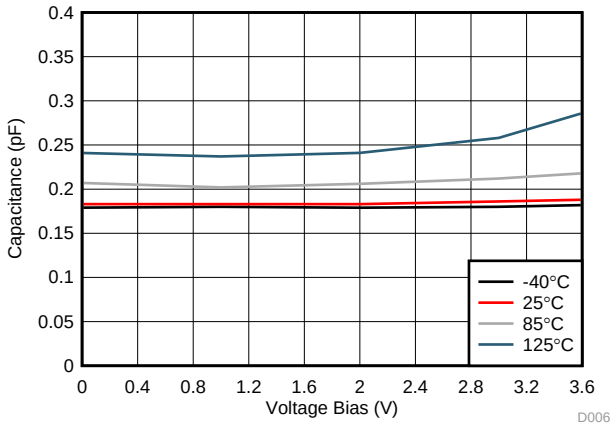

Figure 6. Capacitance vs. Bias Voltage (DPL Package)

Copyright © 2016, Texas Instruments Incorporated

Typical Characteristics (continued)

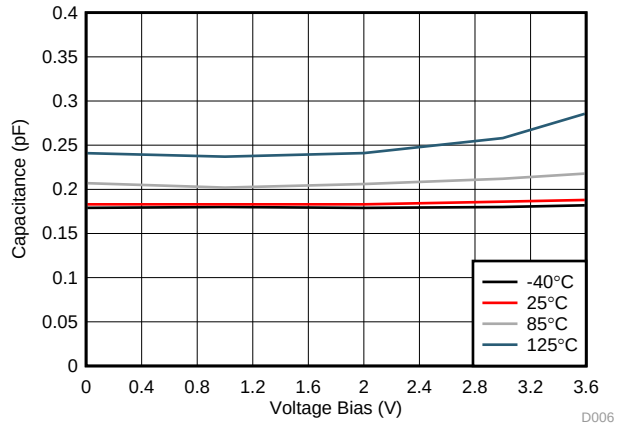

Figure 7. Capacitance vs. Bias Voltage (DPY Package)

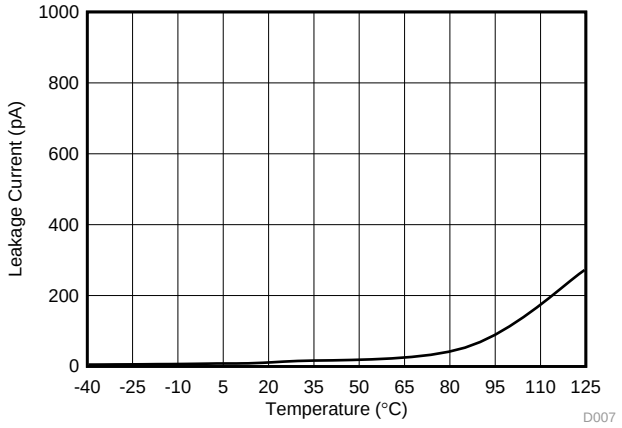

Figure 8. Leakage Current vs. Temperature

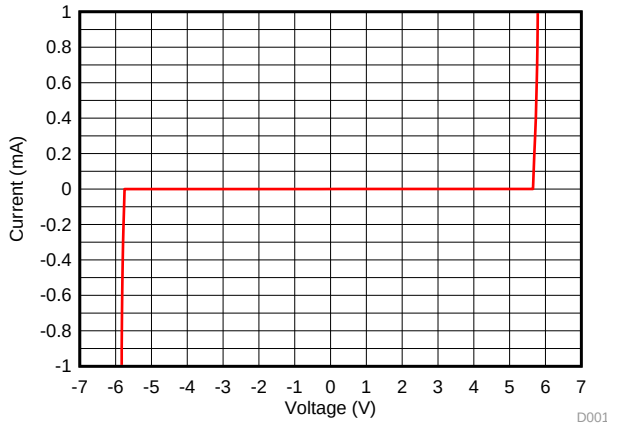

Figure 9. DC Voltage Sweep I-V Curve

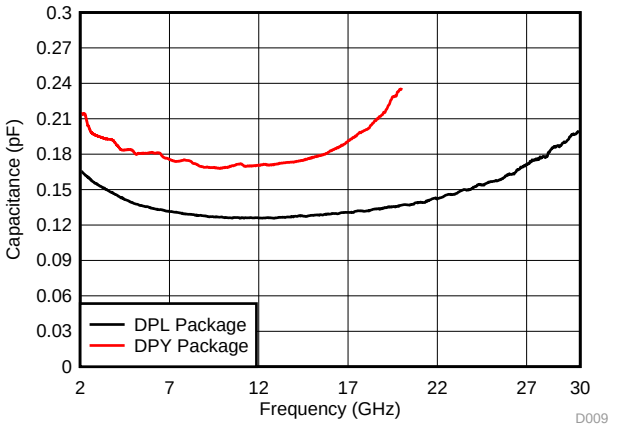

Figure 10. Capacitance vs. Frequency

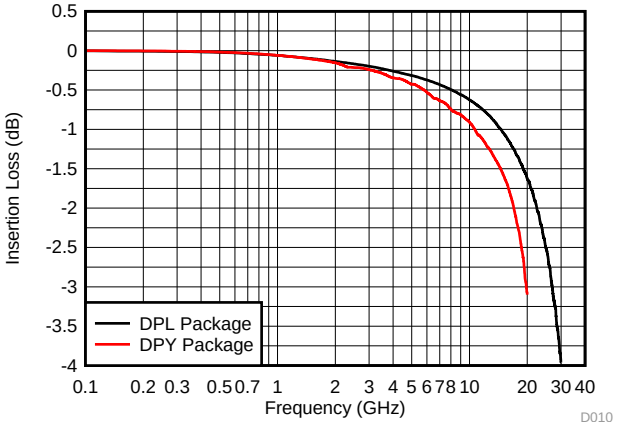

Figure 11. Insertion Loss

Typical Characteristics (continued)

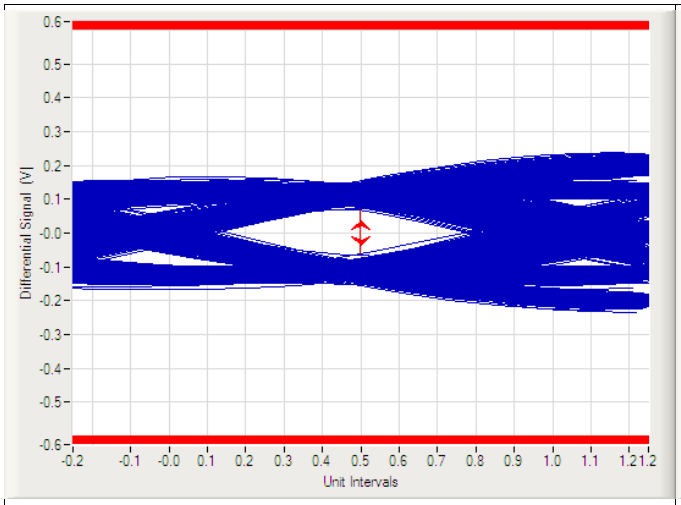

Figure 12. USB3.1 Gen 2 10-Gbps Eye Diagram (Bare Board)

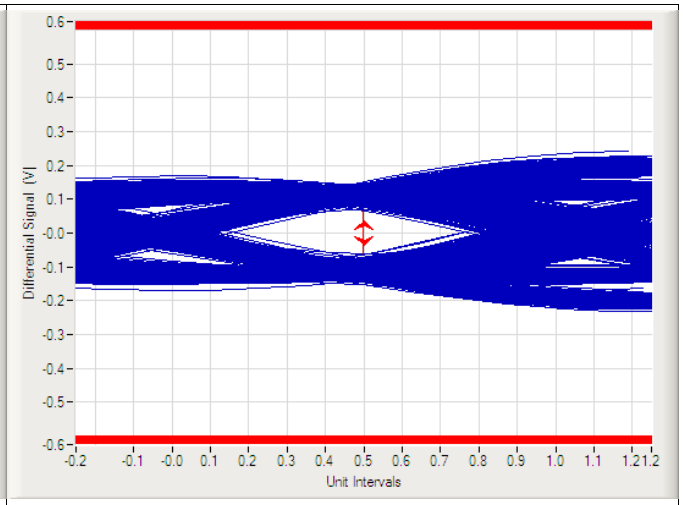

Figure 13. USB3.1 Gen 2 10-Gbps Eye Diagram (with TPD1E01B04DPL)

Copyright © 2016, Texas Instruments Incorporated

7 Detailed Description

7.1 Overview

The TPD1E01B04 device is a bidirectional ESD Protection Diode with ultra-low capacitance. This device can dissipate ESD strikes above the maximum level specified by the IEC 61000-4-2 International Standard. The ultra-low capacitance makes this device ideal for protecting any super high-speed signal pins including Thunderbolt 3. The low capacitance allows for extremely low losses even at RF frequencies such as USB 3.1 Gen 2, Thunderbolt 3, or antenna applications.

7.2 Functional Block Diagram

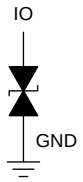

Copyright © 2016, Texas Instruments Incorporated

7.3 Feature Description

7.3.1 IEC 61000-4-2 ESD Protection

The I/O pins can withstand ESD events up to ±15-kV contact and ±17-kV air gap. An ESD-surge clamp diverts the current to ground.

7.3.2 IEC 61000-4-4 EFT Protection

The I/O pins can withstand an electrical fast transient burst of up to 80 A (5/50 ns waveform, 4 kV with 50-Ω impedance). An ESD-surge clamp diverts the current to ground.

7.3.3 IEC 61000-4-5 Surge Protection

The I/O pins can withstand surge events up to 2.5 A and 27 W (8/20 µs waveform). An ESD-surge clamp diverts this current to ground.

7.3.4 IO Capacitance

The capacitance between each I/O pin to ground is 0.18 pF (typical) and 0.20 pF (maximum). This device supports data rates up to 20 Gbps.

7.3.5 DC Breakdown Voltage

The DC breakdown voltage of each I/O pin is ±6.4 V (typical). This ensures that sensitive equipment is protected from surges above the reverse standoff voltage of ±3.6 V.

7.3.6 Ultra Low Leakage Current

The I/O pins feature an ultra-low leakage current of 10 nA (maximum) with a bias of ±2.5 V

7.3.7 Low ESD Clamping Voltage

The I/O pins feature an ESD clamp that is capable of clamping the voltage to 9.2 V (I_{PP} = 5 A).

7.3.8 Supports High Speed Interfaces

This device is capable of supporting high speed interfaces up to 20 Gbps, because of the extremely low IO capacitance.

7.3.9 Industrial Temperature Range

This device features an industrial operating range of –40°C to +125°C.

Feature Description (continued)

7.3.10 Easy Flow-Through Routing Package

The layout of this device makes it simple and easy to add protection to an existing layout. The packages offers flow-through routing, requiring minimal modification to an existing layout.

7.4 Device Functional Modes

The TPD1E01B04 device is a passive integrated circuit that triggers when voltages are above V_{BRF} or below V_{BRR}. During ESD events, voltages as high as ±17 kV (air) can be directed to ground via the internal diode network. When the voltages on the protected line fall below the trigger levels of TPD1E01B04 (usually within 10s of nano-seconds) the device reverts to passive.

Copyright © 2016, Texas Instruments Incorporated

8 Application and Implementation

NOTE

Information in the following applications sections is not part of the TI component specification, and TI does not warrant its accuracy or completeness. TI's customers are responsible for determining suitability of components for their purposes. Customers should validate and test their design implementation to confirm system functionality.

8.1 Application Information

The TPD1E01B04 is a diode type TVS which is used to provide a path to ground for dissipating ESD events on high-speed signal lines between a human interface connector and a system. As the current from ESD passes through the TVS, only a small voltage drop is present across the diode. This is the voltage presented to the protected IC. The low R_{DYN} of the triggered TVS holds this voltage, V_{CLAMP}, to a safe level for the protected IC.

8.2 Typical Application

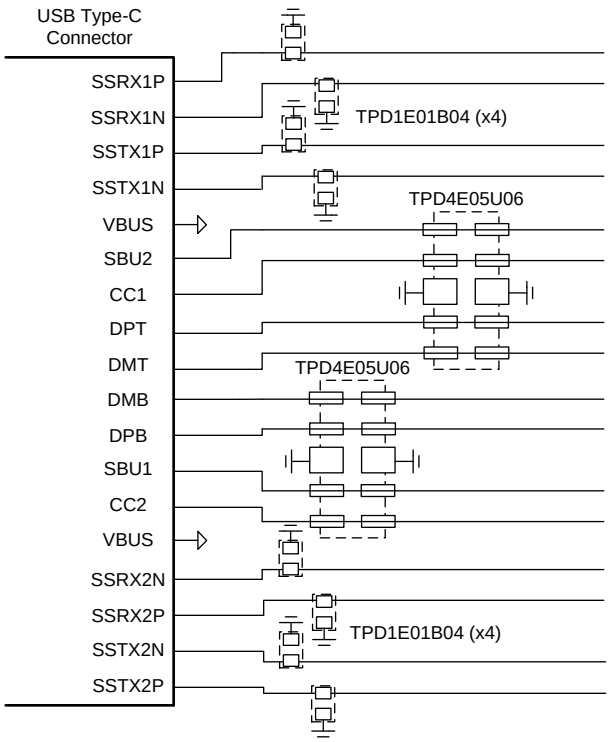

Copyright © 2016, Texas Instruments Incorporated

Figure 14. USB Type-C for Thunderbolt 3 ESD Schematic

Typical Application (continued)

8.2.1 Design Requirements

For this design example eight TPD1E01B04DPL devices and two TPD4E05U06 devices are being used in a USB Type-C for Thunderbolt 3 application. This provides a complete ESD protection scheme.

Given the Thunderbolt 3 application, the parameters listed in Table 1 are known.

Table 1. Design Parameters

DESIGN PARAMETER	VALUE
Signal range on superspeed Lines	0 V to 3.6 V
Operating frequency on superspeed Lines	up to 10 GHz
Signal range on CC, SBU, and DP/DM Lines	0 V to 5 V
Operating frequency on CC, SBU, and DP/DM Lines	up to 480 MHz

8.2.2 Detailed Design Procedure

8.2.2.1 Signal Range

The TPD1E01B04 supports signal ranges between –3.6 V and 3.6 V, which supports the SuperSpeed pairs on the USB Type-C application. The TPD4E05U06 supports signal ranges between 0 V and 5.5 V, which supports the CC, SBU, and DP-DM lines.

8.2.2.2 Operating Frequency

The TPD1E01B04DPL has a 0.18 pF (typical) capacitance, which supports the Thunderbolt 3 data rates of 20 Gbps. The TPD4E05U06 has a 0.5-pF (typical) capacitance, which easily supports the CC, SBU, and DP-DM data rates.

Copyright © 2016, Texas Instruments Incorporated

8.2.3 Application Curves

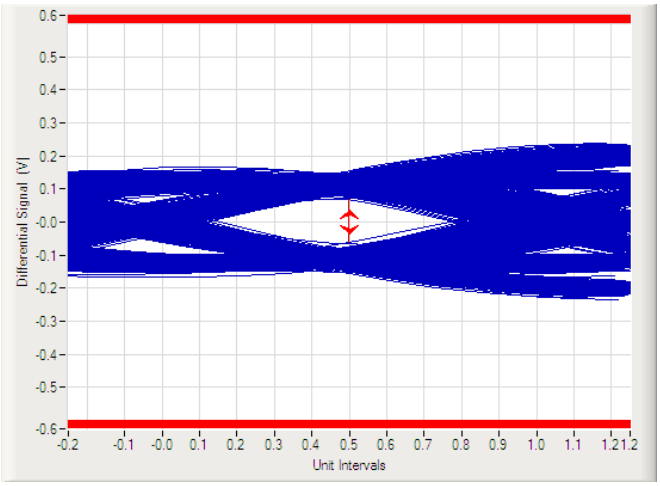

Figure 15. USB 3.1 Gen 2 10-Gbps Eye Diagram (Bare Board)

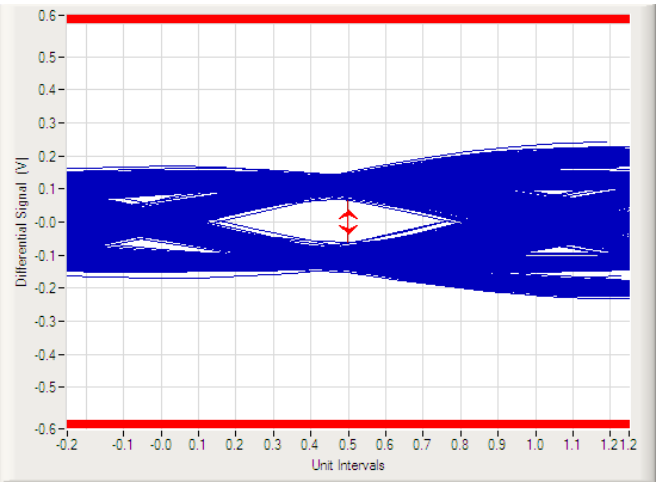

Figure 16. USB 3.1 Gen 2 10-Gbps Eye Diagram (with TPD1E01B04DPL)

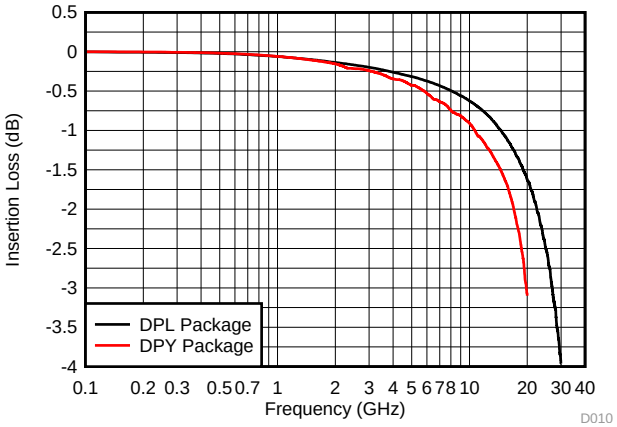

Figure 17. Insertion Loss

9 Power Supply Recommendations

This device is a passive ESD device so there is no need to power it. Take care not to violate the recommended I/O specification to ensure the device functions properly.

10 Layout

10.1 Layout Guidelines

- The optimum placement is as close to the connector as possible.
  - EMI during an ESD event can couple from the trace being struck to other nearby unprotected traces, resulting in early system failures.
  - The PCB designer must minimize the possibility of EMI coupling by keeping any unprotected traces away from the protected traces which are between the TVS and the connector.
- Route the protected traces as straight as possible.
- Eliminate any sharp corners on the protected traces between the TVS and the connector by using rounded corners with the largest radii possible.
  - Electric fields tend to build up on corners, increasing EMI coupling.

10.2 Layout Example

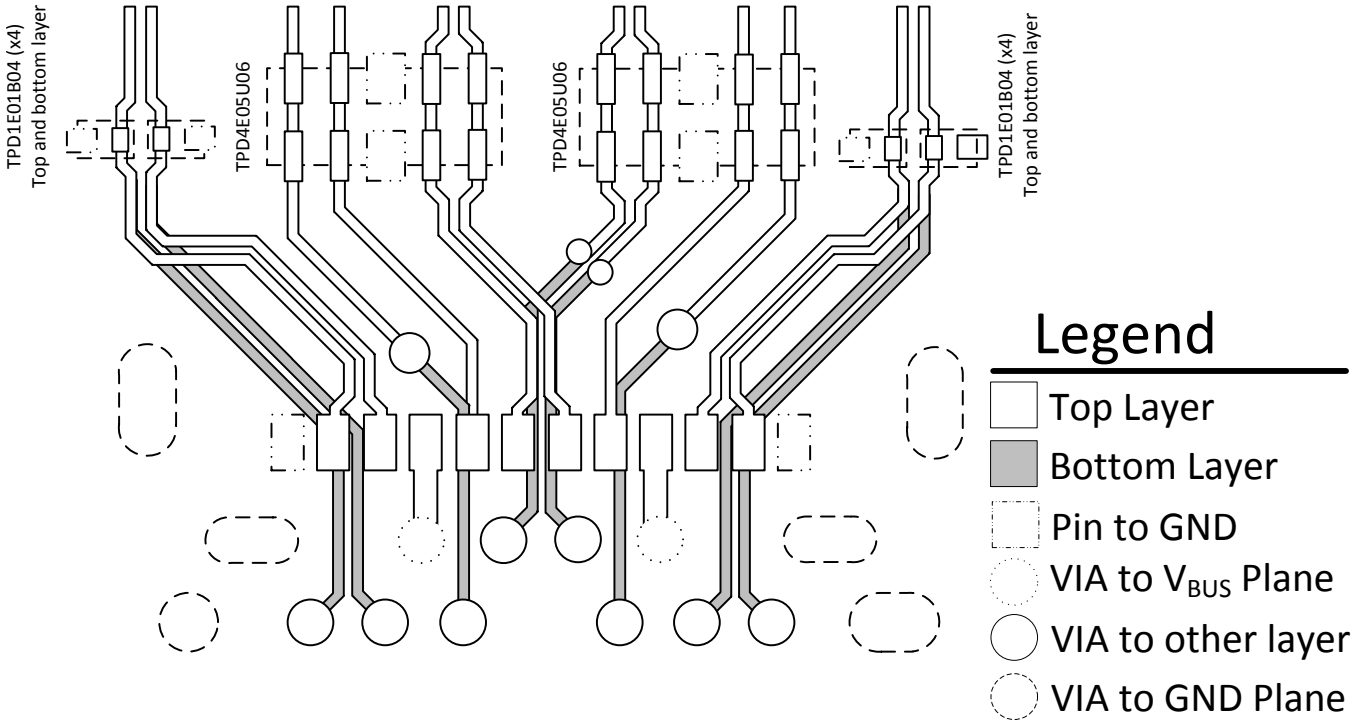

Figure 18. USB Type-C Mid-Mount, Hybrid Connector ESD Layout

Copyright © 2016, Texas Instruments Incorporated

11 Device and Documentation Support

11.1 Documentation Support

11.1.1 Related Documentation

For related documentation see the following:

TPD1E01B04 Evaluation Module User's Guide, SLVUAN5

11.2 Community Resources

The following links connect to TI community resources. Linked contents are provided "AS IS" by the respective contributors. They do not constitute TI specifications and do not necessarily reflect TI's views; see TI's Terms of Use.

TI E2E™ Online Community ***TI's Engineer-to-Engineer (E2E) Community.*** Created to foster collaboration among engineers. At e2e.ti.com, you can ask questions, share knowledge, explore ideas and help solve problems with fellow engineers.

Design Support ***TI's Design Support*** Quickly find helpful E2E forums along with design support tools and contact information for technical support.

11.3 Trademarks

E2E is a trademark of Texas Instruments.
All other trademarks are the property of their respective owners.

11.4 Electrostatic Discharge Caution

These devices have limited built-in ESD protection. The leads should be shorted together or the device placed in conductive foam during storage or handling to prevent electrostatic damage to the MOS gates.

11.5 Glossary

SLYZ022 — *TI Glossary*.

This glossary lists and explains terms, acronyms, and definitions.

12 Mechanical, Packaging, and Orderable Information

The following pages include mechanical, packaging, and orderable information. This information is the most current data available for the designated devices. This data is subject to change without notice and revision of this document. For browser-based versions of this data sheet, refer to the left-hand navigation.

PACKAGING INFORMATION

Orderable part number	Status (1)	Material type (2)	Package | Pins	Package qty | Carrier	RoHS (3)	Lead finish/ Ball material (4)	MSL rating/ Peak reflow (5)	Op temp (°C)	Part marking (6)
TPD1E01B04DPLR	Active	Production	X2SON (DPL) | 2	15000 | LARGE T&R	Yes	NIPDAU	Level-1-260C-UNLIM	-40 to 125	7
TPD1E01B04DPLR.B	Active	Production	X2SON (DPL) | 2	15000 | LARGE T&R	Yes	NIPDAU	Level-1-260C-UNLIM	-40 to 125	7
TPD1E01B04DPLT	Active	Production	X2SON (DPL) | 2	250 | SMALL T&R	Yes	NIPDAU	Level-1-260C-UNLIM	-40 to 125	7
TPD1E01B04DPLT.B	Active	Production	X2SON (DPL) | 2	250 | SMALL T&R	Yes	NIPDAU	Level-1-260C-UNLIM	-40 to 125	7
TPD1E01B04DPLTG4	Active	Production	X2SON (DPL) | 2	250 | SMALL T&R	Yes	NIPDAU	Level-1-260C-UNLIM	-40 to 125	7
TPD1E01B04DPLTG4.B	Active	Production	X2SON (DPL) | 2	250 | SMALL T&R	Yes	NIPDAU	Level-1-260C-UNLIM	-40 to 125	7
TPD1E01B04DPYR	Active	Production	X1SON (DPY) | 2	10000 | LARGE T&R	Yes	NIPDAU | NIPDAUAG	Level-1-260C-UNLIM	-40 to 125	5C
TPD1E01B04DPYR.B	Active	Production	X1SON (DPY) | 2	10000 | LARGE T&R	Yes	NIPDAU	Level-1-260C-UNLIM	-40 to 125	5C
TPD1E01B04DPYT	Active	Production	X1SON (DPY) | 2	250 | SMALL T&R	Yes	NIPDAU | NIPDAUAG	Level-1-260C-UNLIM	-40 to 125	5C
TPD1E01B04DPYT.B	Active	Production	X1SON (DPY) | 2	250 | SMALL T&R	Yes	NIPDAU	Level-1-260C-UNLIM	-40 to 125	5C
TPD1E01B04DPYTG4	Active	Production	X1SON (DPY) | 2	250 | SMALL T&R	Yes	NIPDAU	Level-1-260C-UNLIM	-40 to 125	5C
TPD1E01B04DPYTG4.B	Active	Production	X1SON (DPY) | 2	250 | SMALL T&R	Yes	NIPDAU	Level-1-260C-UNLIM	-40 to 125	5C

(1) **Status:** For more details on status, see our product life cycle.

(2) **Material type:** When designated, preproduction parts are prototypes/experimental devices, and are not yet approved or released for full production. Testing and final process, including without limitation quality assurance, reliability performance testing, and/or process qualification, may not yet be complete, and this item is subject to further changes or possible discontinuation. If available for ordering, purchases will be subject to an additional waiver at checkout, and are intended for early internal evaluation purposes only. These items are sold without warranties of any kind.

(3) **RoHS values:** Yes, No, RoHS Exempt. See the TI RoHS Statement for additional information and value definition.

(4) **Lead finish/Ball material:** Parts may have multiple material finish options. Finish options are separated by a vertical ruled line. Lead finish/Ball material values may wrap to two lines if the finish value exceeds the maximum column width.

(5) **MSL rating/Peak reflow:** The moisture sensitivity level ratings and peak solder (reflow) temperatures. In the event that a part has multiple moisture sensitivity ratings, only the lowest level per JEDEC standards is shown. Refer to the shipping label for the actual reflow temperature that will be used to mount the part to the printed circuit board.

(6) **Part marking:** There may be an additional marking, which relates to the logo, the lot trace code information, or the environmental category of the part.

Multiple part markings will be inside parentheses. Only one part marking contained in parentheses and separated by a "~" will appear on a part. If a line is indented then it is a continuation of the previous line and the two combined represent the entire part marking for that device.

Important Information and Disclaimer: The information provided on this page represents TI's knowledge and belief as of the date that it is provided. TI bases its knowledge and belief on information provided by third parties, and makes no representation or warranty as to the accuracy of such information. Efforts are underway to better integrate information from third parties. TI has taken and continues to take reasonable steps to provide representative and accurate information but may not have conducted destructive testing or chemical analysis on incoming materials and chemicals. TI and TI suppliers consider certain information to be proprietary, and thus CAS numbers and other limited information may not be available for release.

In no event shall TI's liability arising out of such information exceed the total purchase price of the TI part(s) at issue in this document sold by TI to Customer on an annual basis.

OTHER QUALIFIED VERSIONS OF TPD1E01B04 :

- Automotive : TPD1E01B04-Q1

NOTE: Qualified Version Definitions:

- Automotive - Q100 devices qualified for high-reliability automotive applications targeting zero defects

TAPE AND REEL INFORMATION

REEL DIMENSIONS

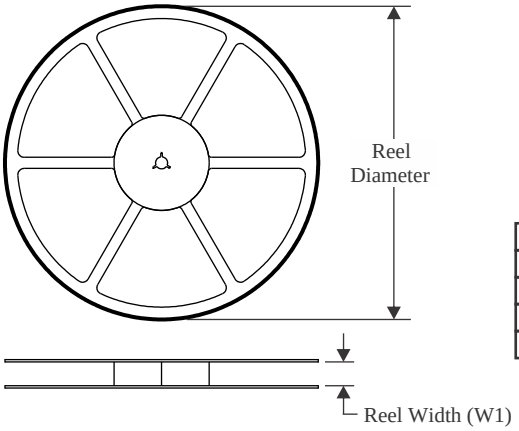

TAPE DIMENSIONS

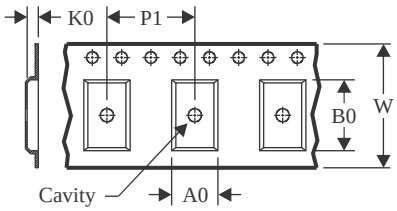

A0	Dimension designed to accommodate the component width
B0	Dimension designed to accommodate the component length
K0	Dimension designed to accommodate the component thickness
W	Overall width of the carrier tape
P1	Pitch between successive cavity centers

QUADRANT ASSIGNMENTS FOR PIN 1 ORIENTATION IN TAPE

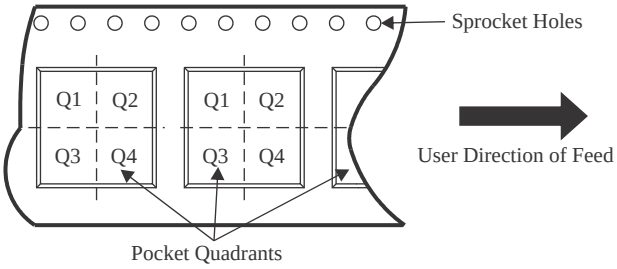

*All dimensions are nominal

Device	Package Type	Package Drawing	Pins	SPQ	Reel Diameter (mm)	Reel Width W1 (mm)	A0 (mm)	B0 (mm)	K0 (mm)	P1 (mm)	W (mm)	Pin1 Quadrant
TPD1E01B04DPLR	X2SON	DPL	2	15000	178.0	8.4	0.36	0.66	0.33	2.0	8.0	Q1
TPD1E01B04DPLT	X2SON	DPL	2	250	178.0	8.4	0.36	0.66	0.33	2.0	8.0	Q1
TPD1E01B04DPLTG4	X2SON	DPL	2	250	178.0	8.4	0.36	0.66	0.33	2.0	8.0	Q1
TPD1E01B04DPYR	X1SON	DPY	2	10000	180.0	8.4	0.67	1.15	0.46	2.0	8.0	Q2
TPD1E01B04DPYT	X1SON	DPY	2	250	180.0	8.4	0.67	1.15	0.46	2.0	8.0	Q2
TPD1E01B04DPYTG4	X1SON	DPY	2	250	180.0	8.4	0.67	1.15	0.46	2.0	8.0	Q2

TAPE AND REEL BOX DIMENSIONS

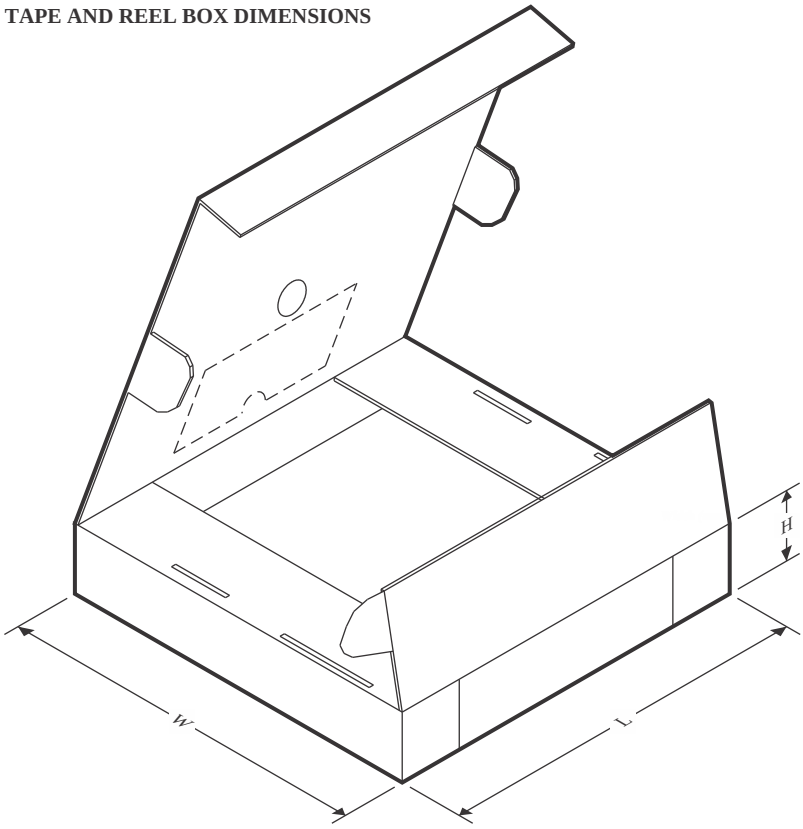

*All dimensions are nominal

Device	Package Type	Package Drawing	Pins	SPQ	Length (mm)	Width (mm)	Height (mm)
TPD1E01B04DPLR	X2SON	DPL	2	15000	205.0	200.0	33.0
TPD1E01B04DPLT	X2SON	DPL	2	250	205.0	200.0	33.0
TPD1E01B04DPLTG4	X2SON	DPL	2	250	205.0	200.0	33.0
TPD1E01B04DPYR	X1SON	DPY	2	10000	210.0	185.0	35.0
TPD1E01B04DPYT	X1SON	DPY	2	250	210.0	185.0	35.0
TPD1E01B04DPYTG4	X1SON	DPY	2	250	210.0	185.0	35.0

GENERIC PACKAGE VIEW

DPY 2

X1SON - 0.45 mm max height

1 x 0.6 mm

PLASTIC SMALL OUTLINE - NO LEAD

This image is a representation of the package family, actual package may vary.
Refer to the product data sheet for package details.

4231484/A

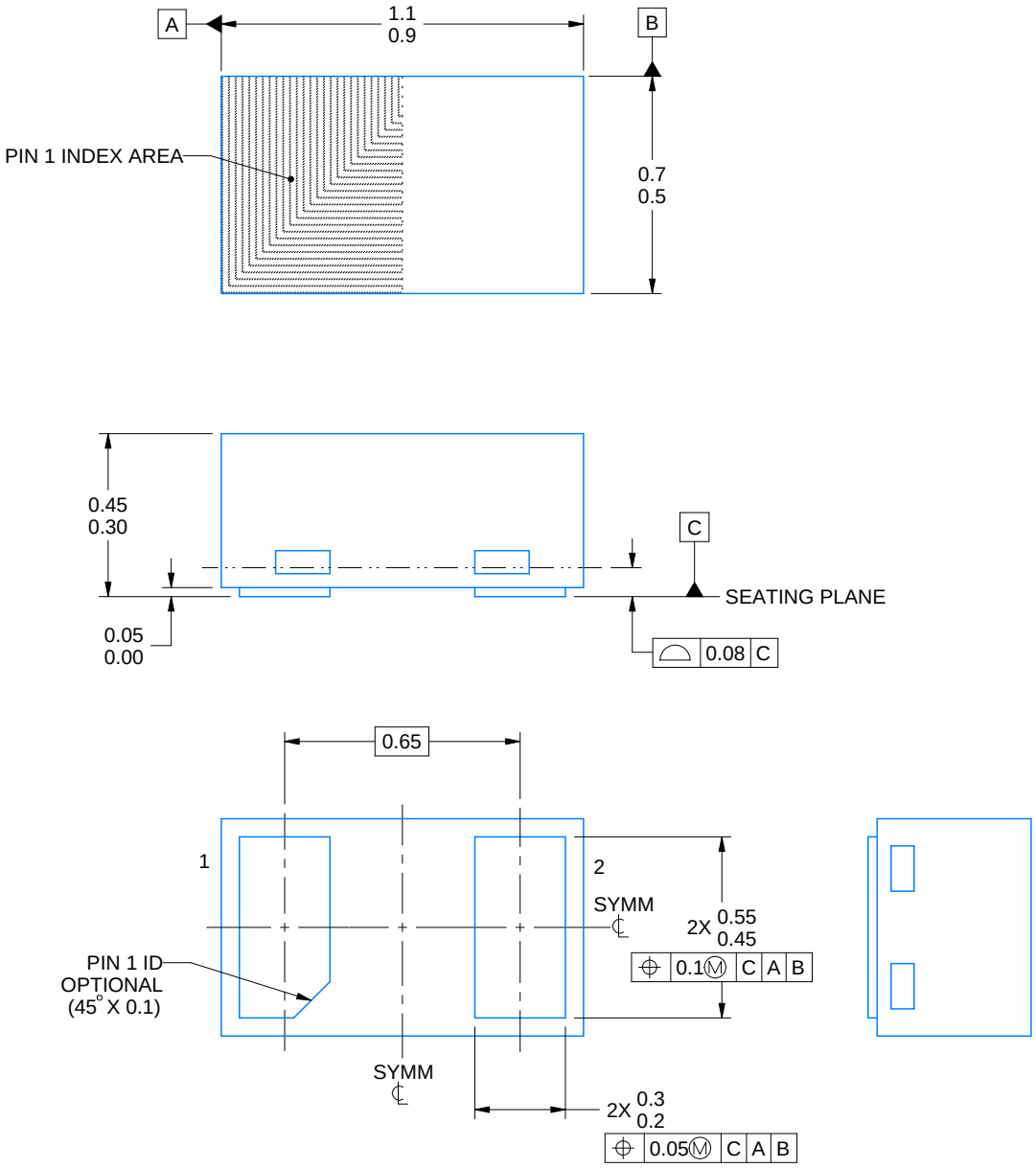

4224561/C 07/2024

NOTES:

1. All linear dimensions are in millimeters. Any dimensions in parenthesis are for reference only. Dimensioning and tolerancing per ASME Y14.5M
2. This drawing is subject to change without notice.

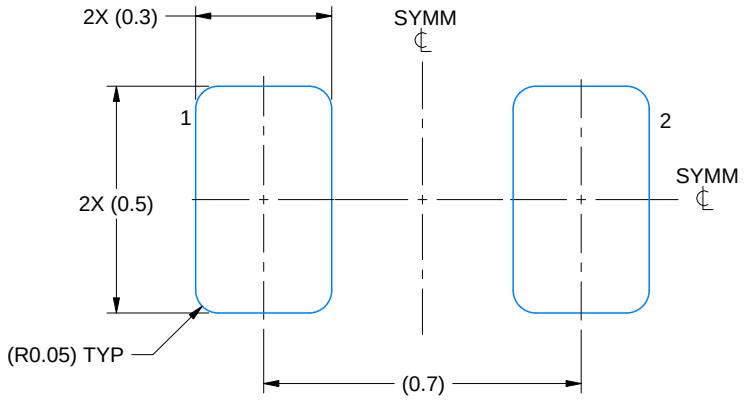

LAND PATTERN EXAMPLE
EXPOSED METAL SHOWN
SCALE:60X

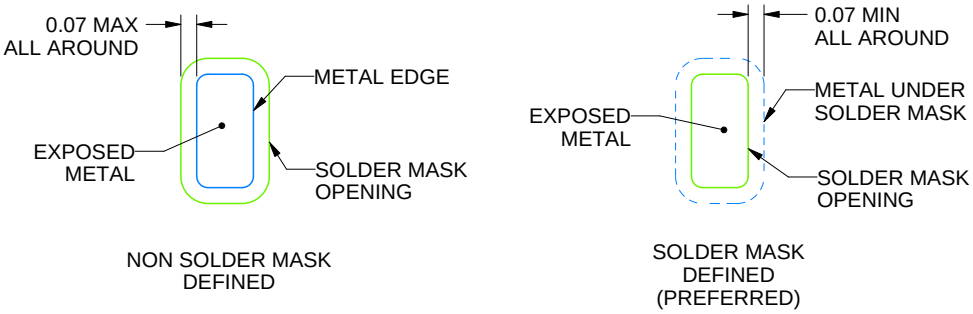

SOLDER MASK DETAILS

4224561/C 07/2024

NOTES: (continued)

3. For more information, see Texas Instruments literature number SLUA271 (www.ti.com/lit/slua271).
4. Vias are optional depending on application, refer to device data sheet. If any vias are implemented, refer to their locations shown on this view. It is recommended that vias under paste be filled, plugged or tented.

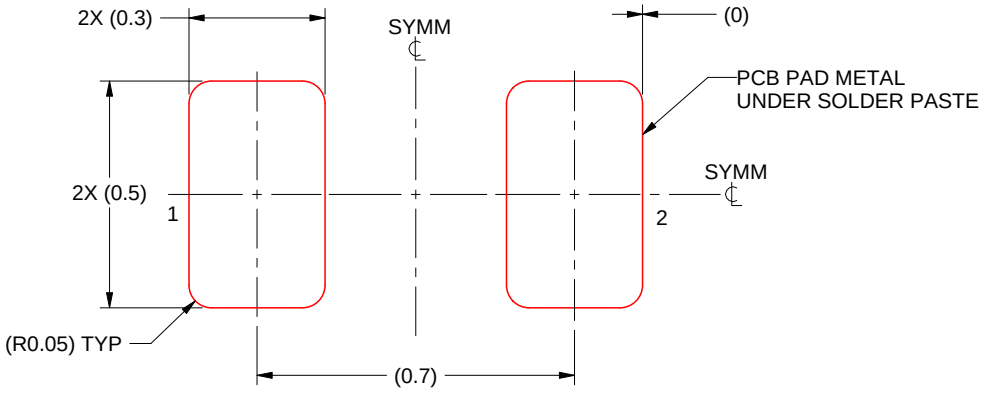

SOLDER PASTE EXAMPLE
BASED ON 0.1 mm THICK STENCIL
SCALE:60X

4224561/C 07/2024

NOTES: (continued)

5. Laser cutting apertures with trapezoidal walls and rounded corners may offer better paste release. IPC-7525 may have alternate design recommendations.

DPL (R-PX2SON-N2) PLASTIC SMALL OUTLINE NO-LEAD

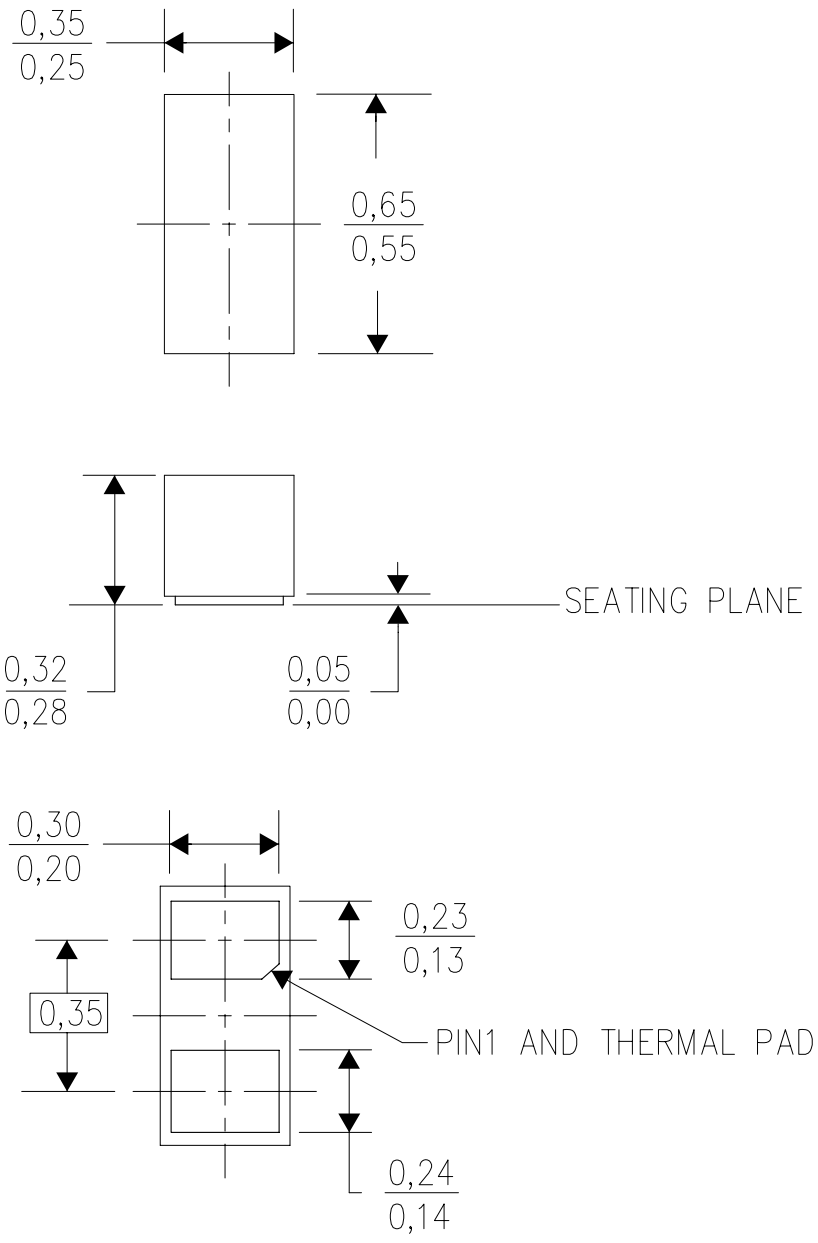

4212149/B 10/11

NOTES:
A. All linear dimensions are in millimeters. Dimensioning and tolerancing per ASME Y14.5M-1994.
B. This drawing is subject to change without notice.
C. Small Outline No-Lead (SON) package configuration.
D. The package thermal pad must be soldered to the board for thermal and mechanical performance.

DPL (R–PX2SON–N2) SMALL PACKAGE OUTLINE NO–LEAD

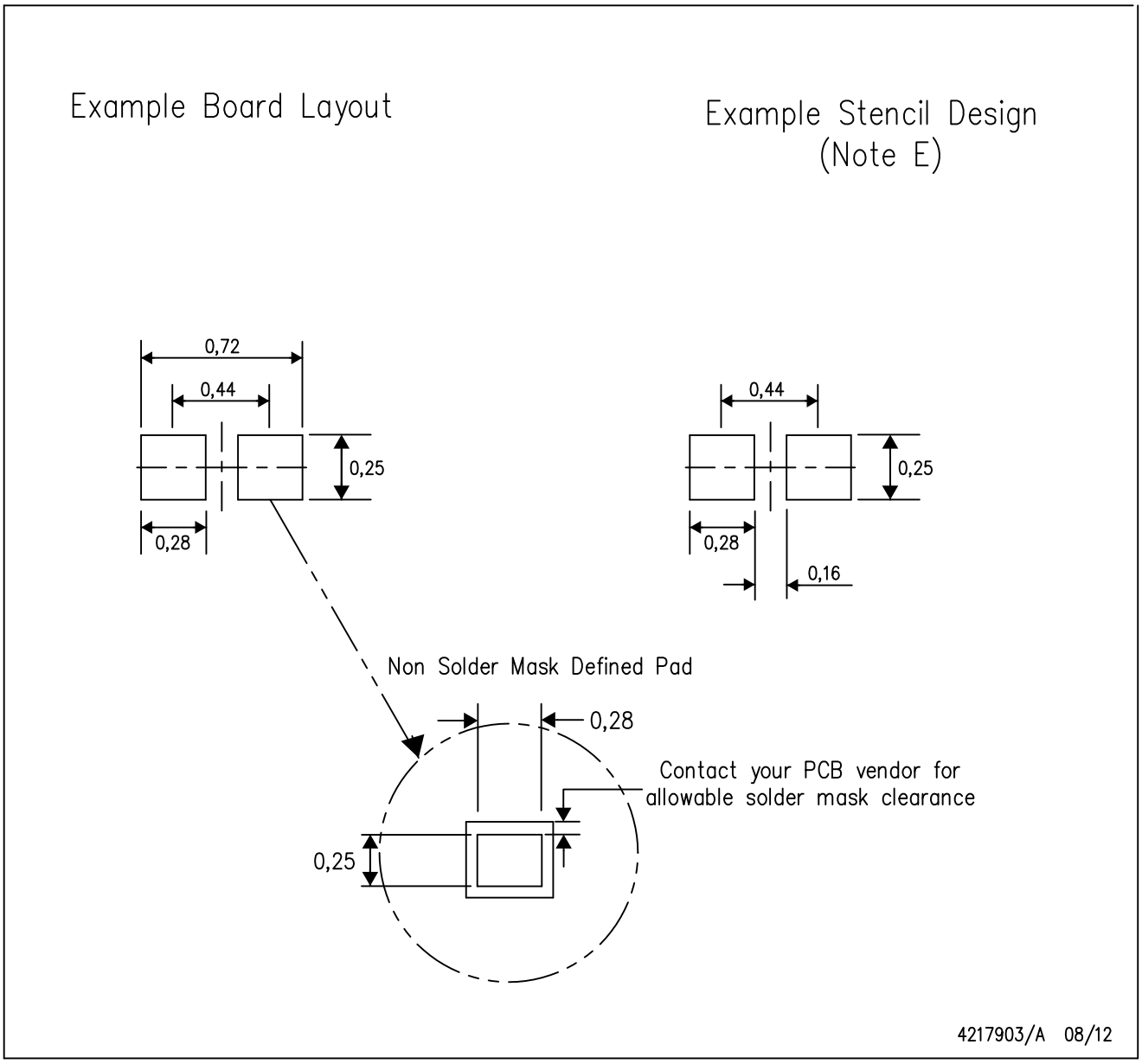

NOTES:
A. All linear dimensions are in millimeters.
B. This drawing is subject to change without notice.
C. Publication IPC–7351 is recommended for alternate designs.
D. Customers should contact their board fabrication site for minimum solder mask web tolerances between signal pads.
E. Maximum stencil thickness 0,127 mm (5 mils). All linear dimensions are in millimeters.
F. Laser cutting apertures with trapezoidal walls and also rounding corners will offer better paste release. Customers should contact their board assembly site for stencil design recommendations. Refer to IPC 7525 for stencil design considerations.
G. Side aperture dimensions over–print land for acceptable area ratio > 0.66. Customer may reduce side aperture dimensions if stencil manufacturing process allows for sufficient release at smaller opening.

IMPORTANT NOTICE AND DISCLAIMER

TI PROVIDES TECHNICAL AND RELIABILITY DATA (INCLUDING DATASHEETS), DESIGN RESOURCES (INCLUDING REFERENCE DESIGNS), APPLICATION OR OTHER DESIGN ADVICE, WEB TOOLS, SAFETY INFORMATION, AND OTHER RESOURCES “AS IS” AND WITH ALL FAULTS, AND DISCLAIMS ALL WARRANTIES, EXPRESS AND IMPLIED, INCLUDING WITHOUT LIMITATION ANY IMPLIED WARRANTIES OF MERCHANTABILITY, FITNESS FOR A PARTICULAR PURPOSE OR NON-INFRINGEMENT OF THIRD PARTY INTELLECTUAL PROPERTY RIGHTS.

These resources are intended for skilled developers designing with TI products. You are solely responsible for (1) selecting the appropriate TI products for your application, (2) designing, validating and testing your application, and (3) ensuring your application meets applicable standards, and any other safety, security, regulatory or other requirements.

These resources are subject to change without notice. TI grants you permission to use these resources only for development of an application that uses the TI products described in the resource. Other reproduction and display of these resources is prohibited. No license is granted to any other TI intellectual property right or to any third party intellectual property right. TI disclaims responsibility for, and you fully indemnify TI and its representatives against any claims, damages, costs, losses, and liabilities arising out of your use of these resources.

TI’s products are provided subject to TI’s Terms of Sale, TI’s General Quality Guidelines, or other applicable terms available either on ti.com or provided in conjunction with such TI products. TI’s provision of these resources does not expand or otherwise alter TI’s applicable warranties or warranty disclaimers for TI products. Unless TI explicitly designates a product as custom or customer-specified, TI products are standard, catalog, general purpose devices.

TI objects to and rejects any additional or different terms you may propose.

Copyright © 2025, Texas Instruments Incorporated

Last updated 10/2025