TPD1E10B06 Single-Channel ESD Protection Diode

1 Features

- Provides system-level ESD protection for low-voltage I/O interface
- IEC 61000-4-2 level 4 ESD protection
  - ±30kV contact discharge
  - ±30kV air-gap discharge
- IEC 61000-4-5 surge: 6A (8/20µs)
- I/O capacitance 12pF (typical)
- R_{DYN} 0.4Ω (typical)
- DC breakdown voltage ±6V (minimum)
- Ultralow leakage current 100nA (maximum)
- 10V clamping voltage (maximum at I_{PP} = 1A)
- Industrial temperature range: –40°C to 125°C
- Small 0402 footprint (1mm × 0.6mm × 0.5mm)
- Industry standard SOD-523 package (0.8mm × 1.2mm)

2 Applications

- End equipment:
  - Portable devices
  - Wearables
  - Set-top boxes
  - Electronic point of sale (EPOS)
  - Appliances
  - Building automation
- Interfaces:
  - Audio lines
  - Push-buttons
  - General-purpose input or output (GPIO)

3 Description

The TPD1E10B06 is a single-channel ESD TVS diode in a small 0402 package convenient for space constrained applications and an industry standard SOD-523 package. This TVS protection product offers ±30kV contact ESD, ±30kV IEC air-gap protection, and has an ESD clamp circuit with a back-to-back TVS diode for bipolar or bidirectional signal support. The 12pF line capacitance of this ESD protection diode is an excellent choice for a wide range of applications supporting data rates up to 400Mbps.

Typical applications of this ESD protection product are circuit protection for audio lines (microphone, earphone, and speakerphone), SD interfacing, keypad or other buttons, VBUS pin and ID pin of USB ports, and general-purpose I/O ports. This ESD clamp is good for the protection of end equipment like portable devices, wearables, set-top boxes, electronic point-of-sale equipment, appliances, and products for building automation.

Package Information

PART NUMBER	PACKAGE(1)	PACKAGE SIZE(2)
TPD1E10B06	DPY (X1SON, 2)	1mm × 0.6mm
	DYA (SOT-5X3, 2)	1.6mm × 0.8mm

(1) For more information, see Section 10.
(2) The package size (length × width) is a nominal value and includes pins, where applicable.

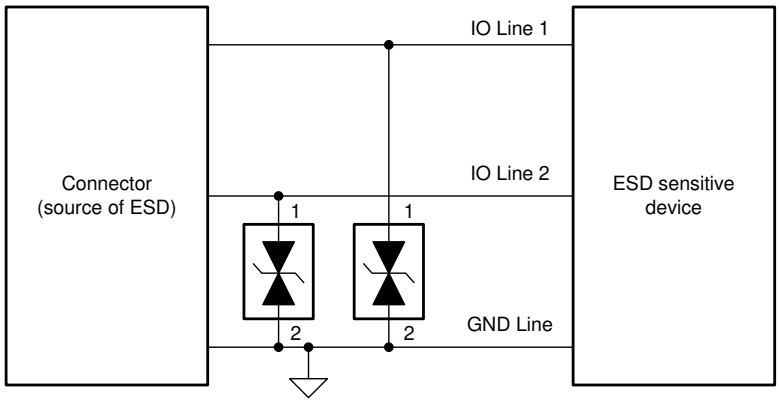

Application Schematic

An IMPORTANT NOTICE at the end of this data sheet addresses availability, warranty, changes, use in safety-critical applications, intellectual property matters and other important disclaimers. PRODUCTION DATA.

Table of Contents

1 Features....1
2 Applications....1
3 Description....1
4 Pin Configuration and Functions....3
5 Specifications....4
5.1 Absolute Maximum Ratings....4
5.2 ESD Ratings - JEDEC Specification....4
5.3 ESD Ratings—IEC Specification....4
5.4 Recommended Operating Conditions....4
5.5 Thermal Information....4
5.6 Electrical Characteristics....5
5.7 Typical Characteristics....6
6 Detailed Description....8
6.1 Overview....8
6.2 Functional Block Diagram....8
6.3 Feature Description....8
6.4 Device Functional Modes....8
7 Application and Implementation....9
7.1 Application Information....9
7.2 Typical Application....9
7.3 Power Supply Recommendations....10
7.4 Layout....11
8 Device and Documentation Support....12
8.1 Receiving Notification of Documentation Updates....12
8.2 Support Resources....12
8.3 Trademarks....12
8.4 Electrostatic Discharge Caution....12
8.5 Glossary....12
9 Revision History....13
10 Mechanical, Packaging, and Orderable Information....13
10.1 Tape and Reel Information....14
10.2 Mechanical Data....16

Copyright © 2024 Texas Instruments Incorporated

4 Pin Configuration and Functions

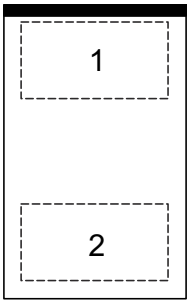

Figure 4-1. DPY Package
2-Pin X1SON
Top View

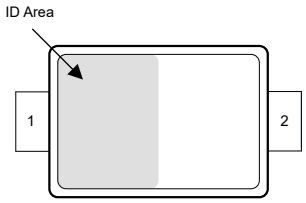

Figure 4-2. DYA Package
2-Pin SOD-523
Top View

Table 4-1. Pin Functions

PIN	I/O	DESCRIPTION
1	I/O	ESD Protected I/O. Connect other pin ground.
2		

5 Specifications

5.1 Absolute Maximum Ratings

over operating free-air temperature range (unless otherwise noted)[1]

		MIN	MAX	UNIT
Peak pulse	IEC 61000-4-5 power (t_p - 8/20 µs) at 25°C		90	W
	IEC 61000-4-5 current (t_p - 8/20 µs) at 25°C		6	A
T_A	Operating free-air temperature	-40	125	°C
T_{stg}	Storage temperature	–65	155	°C

(1) Stresses beyond those listed under *Absolute Maximum Rating* may cause permanent damage to the device. These are stress ratings only, which do not imply functional operation of the device at these or any other conditions beyond those indicated under *Recommended Operating Condition*. Exposure to absolute-maximum-rated conditions for extended periods may affect device reliability.

5.2 ESD Ratings - JEDEC Specification

			VALUE	UNIT
$V_{(ESD)}$	Electrostatic discharge - DPY	Human body model (HBM), per ANSI/ESDA/JEDEC JS-001	±2500	V
		Charged device model (CDM), per JEDEC specification JESD22-C101	±1000	V
$V_{(ESD)}$	Electrostatic discharge - DYA	Human body model (HBM), per ANSI/ESDA/JEDEC JS-001	±2500	V
		Charged device model (CDM), per JEDEC specification JS-002	±1000	V

5.3 ESD Ratings—IEC Specification

			VALUE	UNIT
$V_{(ESD)}$	Electrostatic discharge	IEC 61000-4-2 Contact Discharge, all pins	±30000	V
		IEC 61000-4-2 Air-gap Discharge, all pins	±30000	

5.4 Recommended Operating Conditions

over operating free-air temperature range (unless otherwise noted)

		MIN	NOM	MAX	UNIT
Operating voltage	Pin 1 to 2 or Pin 2 to 1	–5.5		5.5	V
T_A	Operating free-air temperature	-40		125	°C

5.5 Thermal Information

THERMAL METRIC[1]		DPY (X1SON)	DYA (SOD523)	UNIT
		2 PINS	2 PINS	
$R_{\theta JA}$	Junction-to-ambient thermal resistance	615.5	730.8	°C/W
$R_{\theta JC(top)}$	Junction-to-case (top) thermal resistance	404.8	413.4	°C/W
$R_{\theta JB}$	Junction-to-board thermal resistance	493.3	497.7	°C/W
Ψ_{JT}	Junction-to-top characterization parameter	127.7	129.7	°C/W
Ψ_{JB}	Junction-to-board characterization parameter	493.3	491.8	°C/W
$R_{\theta JC(bot)}$	Junction-to-case (bottom) thermal resistance	162	-	°C/W

(1) For more information about traditional and new thermal metrics, see the Semiconductor and IC Package Thermal Metrics application report.

Copyright © 2024 Texas Instruments Incorporated

5.6 Electrical Characteristics

over operating free-air temperature range (unless otherwise noted)

PARAMETER		TEST CONDITION	MIN	TYP	MAX	UNIT
V_{RWM}	Reverse stand-off voltage	Pin 1 to 2 or Pin 2 to 1			5.5	V
I_{LEAK}	Leakage current	Pin 1 = 5 V, Pin 2 = 0 V			100	nA
$V_{Clamp1,2}$	Clamp voltage with surge strike on pin 1, pin 2 grounded.	I_{PP} = 1 A, t_p = 8/20 µs(2)			10	V
$V_{Clamp1,2}$	Clamp voltage with surge strike on pin 1, pin 2 grounded.	I_{PP} =5 A, t_p = 8/20 µs(2)			14	V
$V_{Clamp2,1}$	Clamp voltage with surge strike on pin 2, pin 1 grounded.	I_{PP} = 1 A, t_p = 8/20 µs(2)			8.5	V
		I_{PP} = 5 A, t_p = 8/20 µs(2)			14	
R_{DYN}	Dynamic resistance	Pin 1 to Pin 2(1)		0.32		Ω
		Pin 2 to Pin 1(1)		0.38		
C_{IO}	I/O capacitance	V_{IO} = 2.5 V; f = 1 MHz		12		pF
$V_{BR1,2}$	Break-down voltage, pin 1 to pin 2	I_{IO} = 1 mA	6			V
$V_{BR2,1}$	Break-down voltage, pin 2 to pin 1	I_{IO} = 1 mA	6			V

(1) Extraction of R_{DYN} using least squares fit of TLP characteristics between I_{PP} = 10 A and I_{PP} = 20 A.
(2) Nonrepetitive current pulse 8 to 20 µs exponentially decaying waveform according to IEC 61000-4-5

Copyright © 2024 Texas Instruments Incorporated

5.7 Typical Characteristics

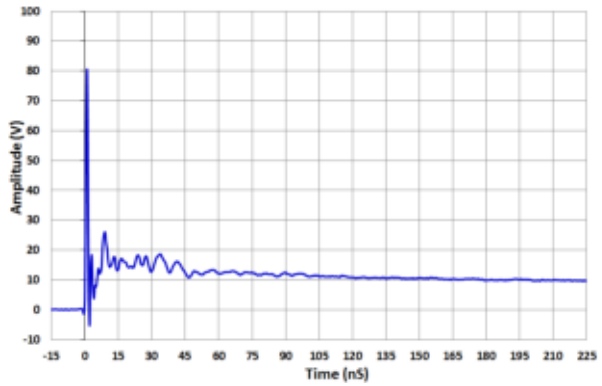

Figure 5-1. IEC 61000-4-2 Clamp Voltage +8 kV Contact ESD

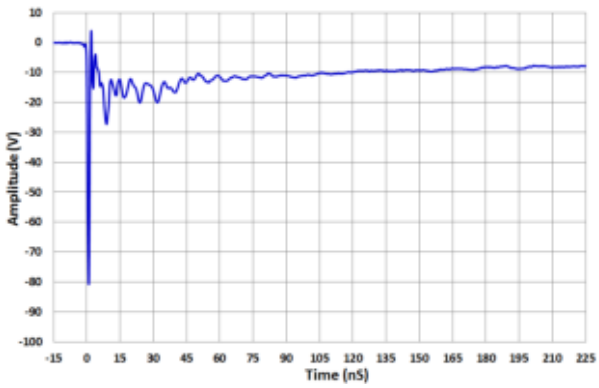

Figure 5-2. IEC 61000-4-2 Clamp Voltage –8-kV Contact ESD

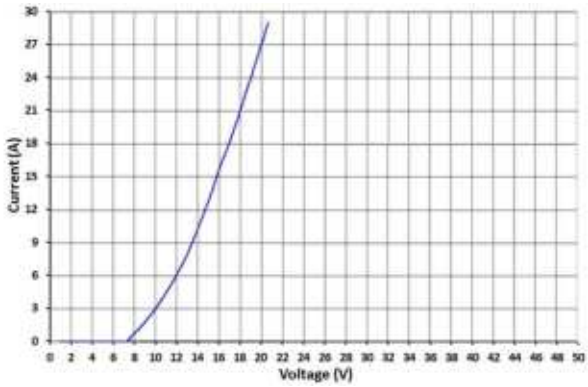

Figure 5-3. Transmission Line Pulse (TLP) Waveform Pin 1 to Pin 2

Figure 5-4. Transmission Line Pulse (TLP) Waveform Pin 2 to Pin 1

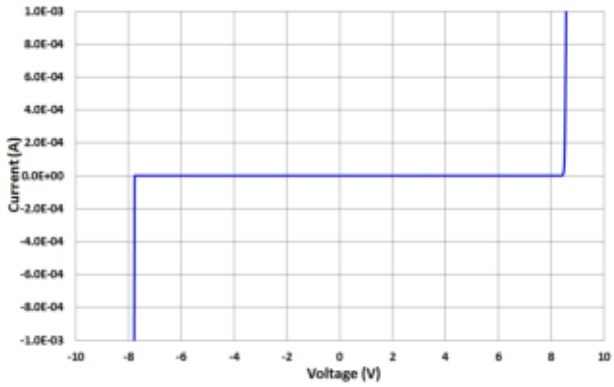

Figure 5-5. IV Curve

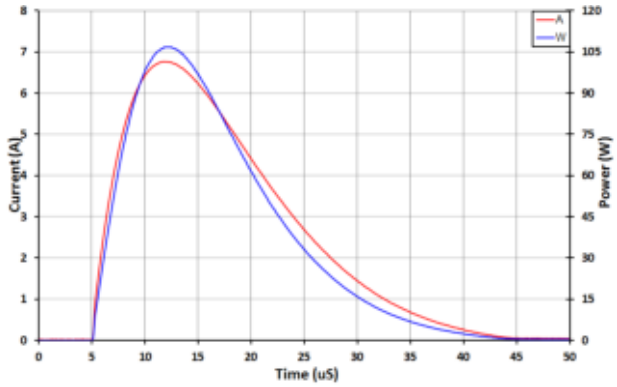

Figure 5-6. Positive Surge Waveform 8 to 20 µs

Copyright © 2024 Texas Instruments Incorporated

5.7 Typical Characteristics (continued)

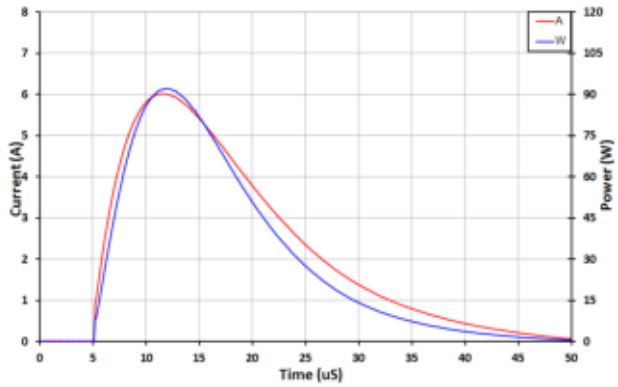

Figure 5-7. Negative Surge Waveform 8 to 20 µs

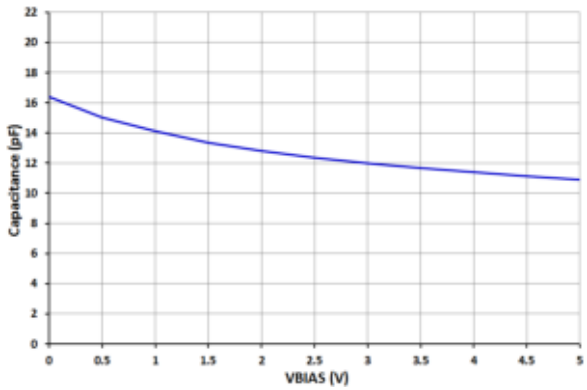

Figure 5-8. Pin Capacitance Across V_{BIAS}

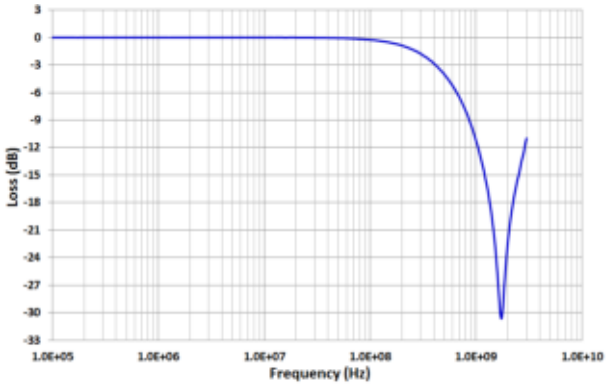

Figure 5-9. Insertion Loss

6 Detailed Description

6.1 Overview

The TPD1E108B06 is a single-channel ESD TVS diode in a small 0402 package convenient for space constrained applications and an industry standard SOD-523 package. This TVS protection product offers ±30 kV IEC air-gap, ±30 kV contact ESD protection, and has an ESD clamp circuit with a back-to-back TVS diode for bipolar or bidirectional signal support. The 12 pF line capacitance of this ESD protection diode is suitable for a wide range of applications supporting data rates up to 400 Mbps.

Typical application of this ESD protection product is the circuit protection for audio lines (microphone, earphone, and speakerphone), SD interfacing, keypad or other buttons, VBUS pin and ID pin of USB ports, and general-purpose I/O ports. This ESD clamp is a good fit for the protection of the end equipment like ebooks, tablets, remote controllers, wearables, set-top boxes, and electronic point of sale equipment.

6.2 Functional Block Diagram

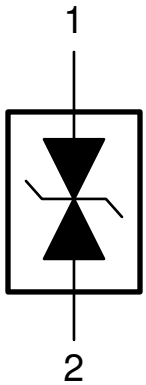

6.3 Feature Description

TPD1E10B06 is a bidirectional TVS with high ESD protection level. This device protects circuit from ESD strikes up to ±30 kV contact and ±30 kV air-gap specified in the IEC 61000-4-2 international standard. The device can also handle up to 6-A surge current (IEC61000-4-5 8/20 µs). The I/O capacitance of 12 pF supports a data rate up to 400 Mbps. This clamping device has a small dynamic resistance of 0.4 Ω typically, which makes the clamping voltage low when the device is actively protecting other circuits. For example, the clamping voltage is only 10 V when the device is taking 1-A transient current. The breakdown is bidirectional so that this protection device is a good fit for GPIO and especially audio lines which carry bidirectional signals. Low leakage allows the diode to conserve power when working below the V_{RWM}. The industrial temperature range of –40°C to 125°C makes this ESD device work at extensive temperatures in most environments. The 0402 package can fit into small electronic devices like mobile equipment and wearables whereas the SOD-523 package is good for industrial applications.

6.4 Device Functional Modes

TPD1E10B06 is a passive clamp that has low leakage during normal operation when the voltage between pin 1 and pin 2 is below V_{RWM} and activates when the voltage between pin 1 and pin 2 goes above V_{BR}. During IEC ESD events, transient voltages as high as ±30 kV can be clamped between the two pins. When the voltages on the protected lines fall below the trigger voltage, the device reverts back to the low leakage passive state.

Copyright © 2024 Texas Instruments Incorporated

7 Application and Implementation

Note

Information in the following applications sections is not part of the TI component specification, and TI does not warrant its accuracy or completeness. TI's customers are responsible for determining suitability of components for their purposes, as well as validating and testing their design implementation to confirm system functionality.

7.1 Application Information

When a system contains a human interface connector, the system becomes vulnerable to large system-level ESD strikes that standard ICs cannot survive. TVS ESD protection diodes are typically used to suppress ESD at these connectors. TPD1E10B06 is a single-channel ESD protection device containing back-to-back TVS diodes, which is typically used to provide a path to ground for dissipating ESD events on bidirectional signal lines between a human interface connector and a system. As the current from ESD passes through the device, only a small voltage drop is present across the diode structure. This is the voltage presented to the protected IC. The low R_{DYN} of the triggered TVS holds this voltage, V_{CLAMP}, to a tolerable level to the protected IC.

7.2 Typical Application

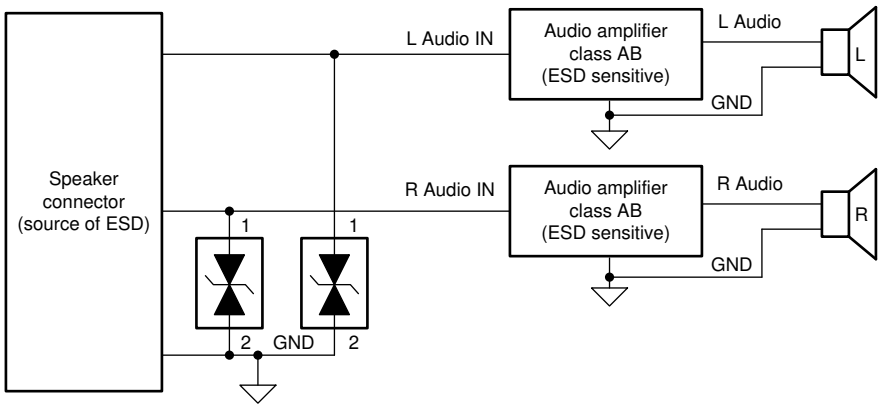

Figure 7-1. Typical Application Schematic

7.2.1 Design Requirements

For this design example, two TPD1E10B06s will be used to protect left and right audio channels. For this audio application, the following system parameters are known.

Table 7-1. Design Parameters

DESIGN PARAMETER	VALUE
Audio Amplifier Class	AB
Audio signal voltage range	–3 V to 3 V
Audio frequency content	20 Hz to 20 kHz
Required IEC 61000-4-2 ESD Protection	±20 kV Contact/ ±25 kV Air-Gap

7.2.2 Detailed Design Procedure

To begin the design process, some parameters must be decided upon; the designer should make sure:

- Voltage range on the protected line must not exceed the reverse standoff voltage of one or more TVS diodes (V_{RWM})
- Operating frequency is supported by the I/O capacitance C_{IO} of the TVS diode
- IEC 61000-4-2 protection requirement is covered by the IEC performance of the TVS diode

For this application, the audio signal voltage range is –3 V to 3 V. The V_{RWM} for the TVS is –5.5 V to 5.5 V; therefore, the bidirectional TVS will not break down during normal operation, and therefore normal operation of the audio signal will not be effected due to the signal voltage range. In this application, a bidirectional TVS like TPD1E10B06 is required.

Next, consider the frequency content of this audio signal. In this application with the class AB amplifier, the frequency content is from 20 Hz to 20 kHz; ensure that the TVS I/O capacitance will not distort this signal by filtering it. With TPD1E10B06 typical capacitance of 12 pF, which leads to a typical 3-dB bandwidth of 400 MHz, this diode has sufficient bandwidth to pass the audio signal without distorting it.

Finally, the human interface in this application requires above standard Level 4 IEC 61000-4-2 system-level ESD protection (±8 kV Contact/ ±15 kV Air-Gap). A standard TVS cannot survive this level of IEC ESD stress. However, TPD1E10B06 can survive at least ±30 kV Contact/ ±30 kV Air-Gap. Therefore, the device can provide sufficient ESD protection for the interface, even though the requirements are stringent. For any TVS diode to provide the full range of ESD protection capabilities, as well as to minimize the noise and EMI disturbances the board will see during ESD events, a system designer must use proper board layout of their TVS ESD protection diodes. See *Section 7.4* for instructions on properly laying out TPD1E10B06.

7.2.3 Application Curves

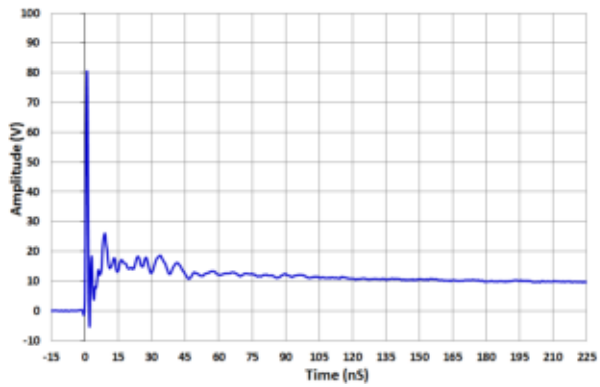

Figure 7-2. IEC 61000-4-2 Clamp Voltage +8 kV Contact ESD

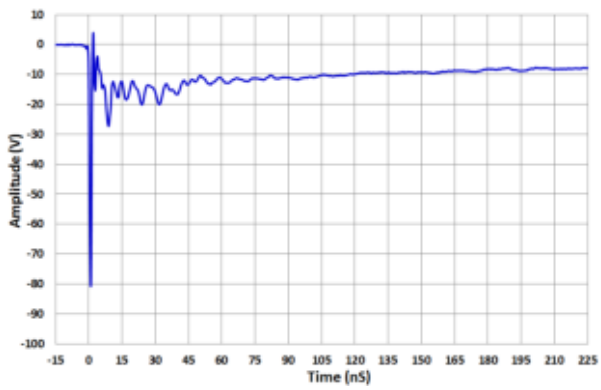

Figure 7-3. IEC 61000-4-2 Clamp Voltage –8 kV Contact ESD

7.3 Power Supply Recommendations

This device is a passive TVS diode-based ESD protection device, therefore there is no requirement to power it. Take care to make sure that the maximum voltage specifications for each pin are not violated.

Copyright © 2024 Texas Instruments Incorporated

7.4 Layout

7.4.1 Layout Guidelines

- The optimum placement is as close to the connector as possible.
  - EMI during an ESD event can couple from the trace being struck to other nearby unprotected traces, resulting in early system failures.
  - The PCB designer must minimize the possibility of EMI coupling by keeping any unprotected traces away from the protected traces which are between the TVS and the connector.
- Route the protected traces as straight as possible.
- Eliminate any sharp corners on the protected traces between the TVS and the connector by using rounded corners with the largest radii possible.
  - Electric fields tend to build up on corners, increasing EMI coupling.
- If pin 1 or pin 2 is connected to ground, use a thick and short trace for this return path

7.4.2 Layout Example

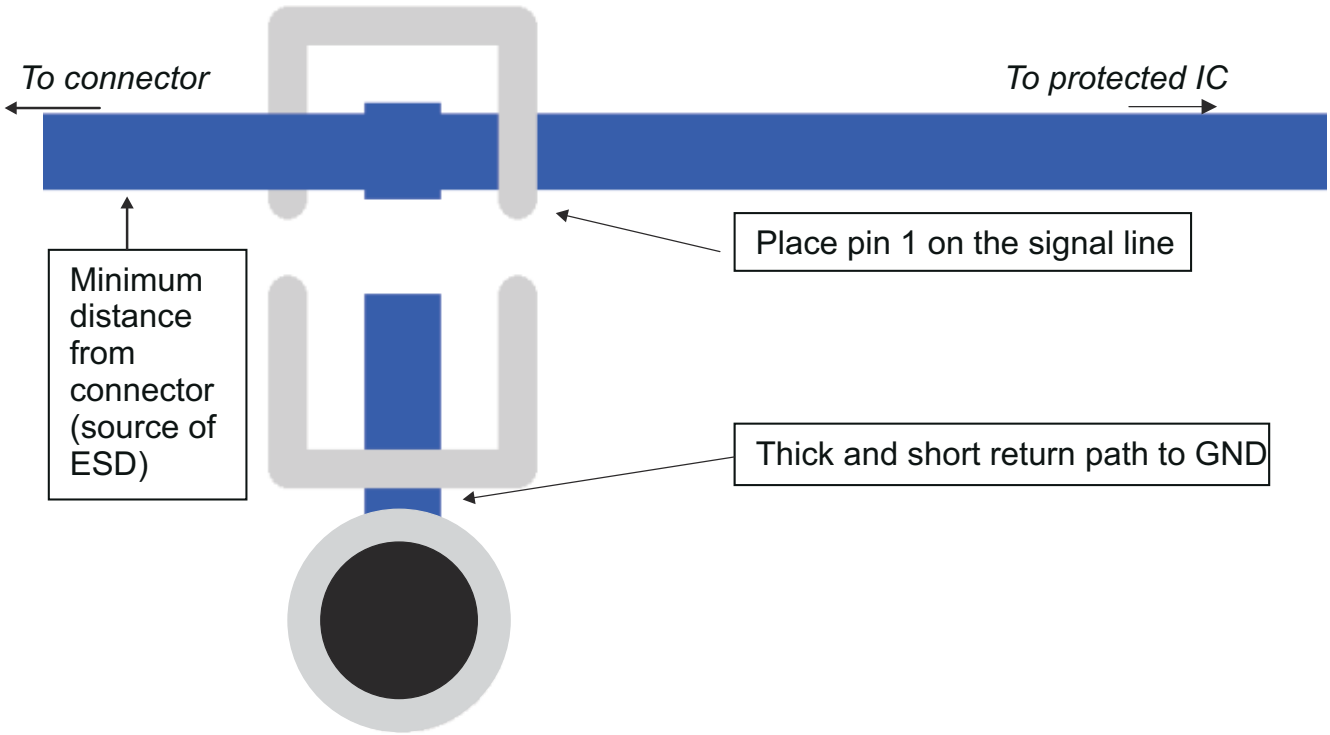

Figure 7-4. Layout Recommendation

8 Device and Documentation Support

8.1 Receiving Notification of Documentation Updates

To receive notification of documentation updates, navigate to the device product folder on ti.com. Click on *Notifications* to register and receive a weekly digest of any product information that has changed. For change details, review the revision history included in any revised document.

8.2 Support Resources

TI E2E™ support forums are an engineer's go-to source for fast, verified answers and design help — straight from the experts. Search existing answers or ask your own question to get the quick design help you need.

Linked content is provided "AS IS" by the respective contributors. They do not constitute TI specifications and do not necessarily reflect TI's views; see TI's Terms of Use.

8.3 Trademarks

TI E2E™ is a trademark of Texas Instruments.
All trademarks are the property of their respective owners.

8.4 Electrostatic Discharge Caution

This integrated circuit can be damaged by ESD. Texas Instruments recommends that all integrated circuits be handled with appropriate precautions. Failure to observe proper handling and installation procedures can cause damage.

ESD damage can range from subtle performance degradation to complete device failure. Precision integrated circuits may be more susceptible to damage because very small parametric changes could cause the device not to meet its published specifications.

8.5 Glossary

TI Glossary	This glossary lists and explains terms, acronyms, and definitions.

Copyright © 2024 Texas Instruments Incorporated

9 Revision History

NOTE: Page numbers for previous revisions may differ from page numbers in the current version.

Changes from Revision F (October 2021) to Revision G (August 2024)	Page
• Updated the *Package Information* table	1

Changes from Revision E (June 2021) to Revision F (October 2021)	Page
• Updated the *Application Schematic* figure	1
• Updated the Description of Pin 1 and pin 2 in the *Pin Configuration and Functions* section	3
• Changed HBM spec to per JS-001 in *ESD Ratings - JEDEC Specification*	4
• Changed CDM spec to per JESD22-C101	4
• Updated the *Typical Application Schematic* figure	9
• Changed the system-level ESD protection from: *±20 kV Contact/± 25 kV Air-Gap* to: *±8 kV Contact/± 15 kV Air-Gap*	10

10 Mechanical, Packaging, and Orderable Information

The following pages include mechanical, packaging, and orderable information. This information is the most current data available for the designated devices. This data is subject to change without notice and revision of this document. For browser-based versions of this data sheet, refer to the left-hand navigation.

10.1 Tape and Reel Information

REEL DIMENSIONS

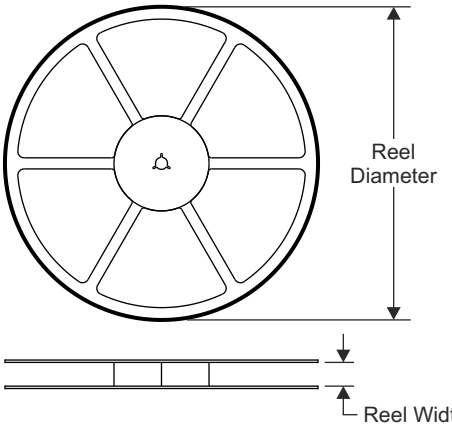

TAPE DIMENSIONS

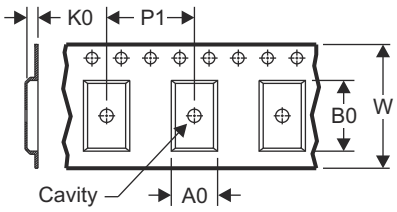

A0	Dimension designed to accommodate the component width
B0	Dimension designed to accommodate the component length
K0	Dimension designed to accommodate the component thickness
W	Overall width of the carrier tape
P1	Pitch between successive cavity centers

QUADRANT ASSIGNMENTS FOR PIN 1 ORIENTATION IN TAPE

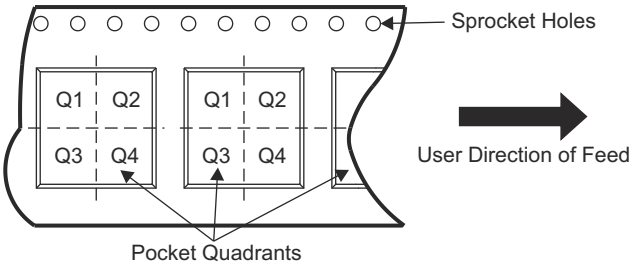

Device	Package Type	Package Drawing	Pins	SPQ	Reel Diameter (mm)	Reel Width W1 (mm)	A0 (mm)	B0 (mm)	K0 (mm)	P1 (mm)	W (mm)	Pin1 Quadrant
TPD1E10B06DPYT	X1SON	DPY	2	250	180.0	9.5	0.66	1.15	0.66	2.0	8.0	Q1
TPD1E10B06DPYR	X1SON	DPY	2	10,000	180.00	8.400	0.67	1.15	0.46	2.0	8.000	Q2
TPD1E10B06DYAR	SOT-5X3	DYA	2	3000	178.0	9.5	0.5	1.94	0.73	2.0	8.0	Q1

Copyright © 2024 Texas Instruments Incorporated

TAPE AND REEL BOX DIMENSIONS

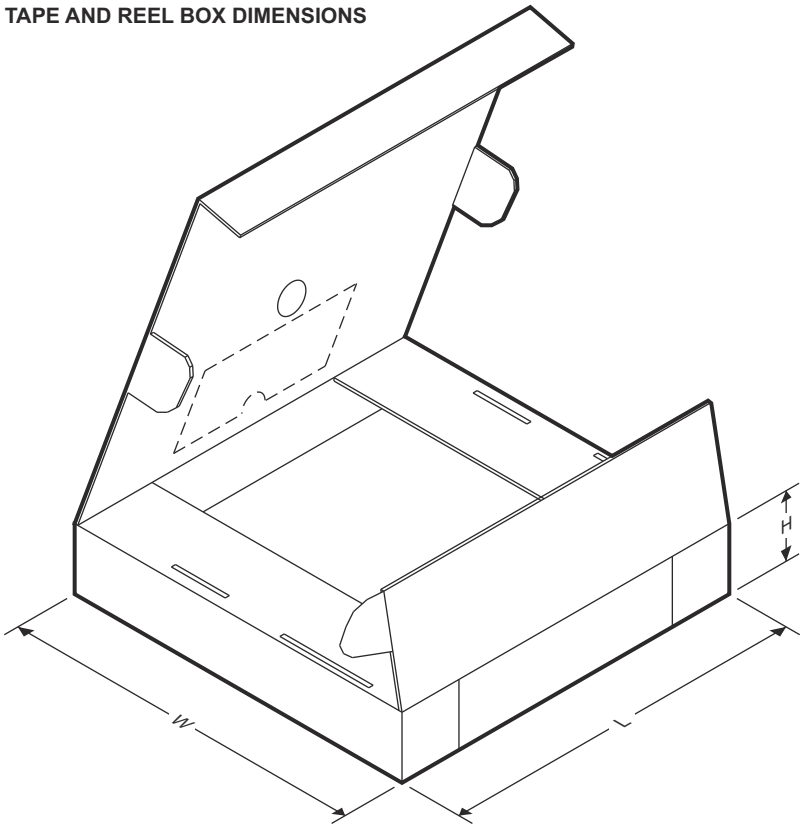

Device	Package Type	Package Drawing	Pins	SPQ	Length (mm)	Width (mm)	Height (mm)
TPD1E10B06DPYT	X1SON	DPY	2	250	184.0	184.0	19.0
TPD1E10B06DPYR	X1SON	DPY	2	10,000	210.000	185.000	35.000
TPD1E10B06DYAR	SOT-5X3	DYA	2	3000	210.0	200.0	42.0

Copyright © 2024 Texas Instruments Incorporated

10.2 Mechanical Data

PACKAGE OUTLINE

DYA0002A **SOT (SOD-523) - 0.77 mm max height**

PLASTIC SMALL OUTLINE

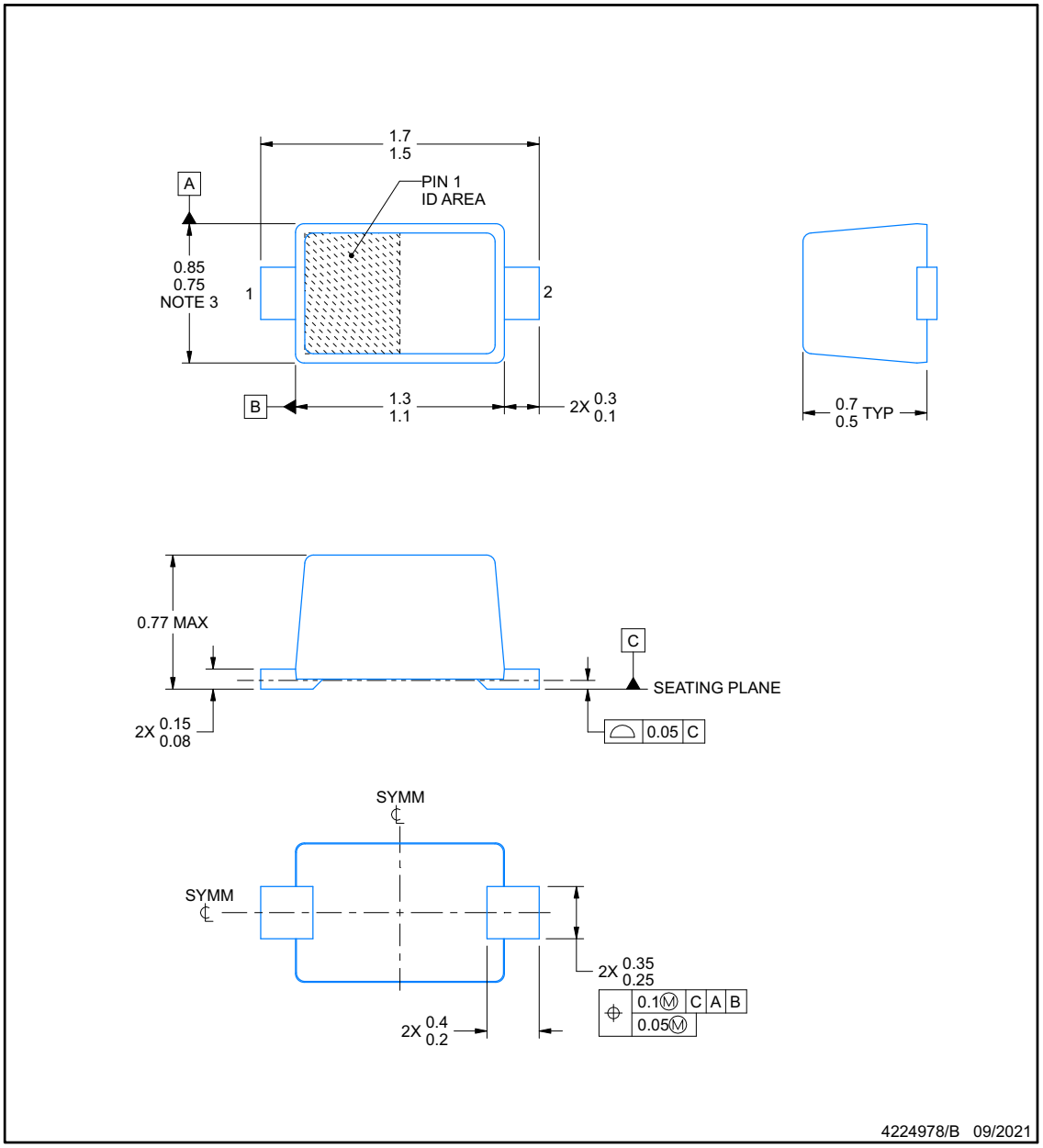

NOTES:

1. All linear dimensions are in millimeters. Any dimensions in parenthesis are for reference only. Dimensioning and tolerancing per ASME Y14.5M.
2. This drawing is subject to change without notice.
3. This dimension does not include mold flash, protrusions, or gate burrs. Mold flash, protrusions, or gate burrs shall not exceed 0.15 mm per side.
4. Reference JEITA SC-79 registration except for package height

Copyright © 2024 Texas Instruments Incorporated

EXAMPLE BOARD LAYOUT

DYA0002A

SOT (SOD-523) - 0.77 mm max height

PLASTIC SMALL OUTLINE

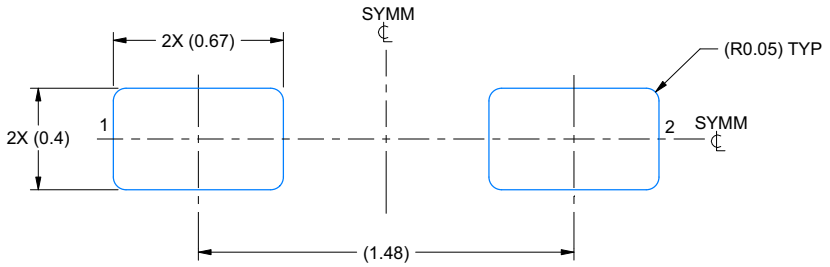

LAND PATTERN EXAMPLE
SCALE:40X

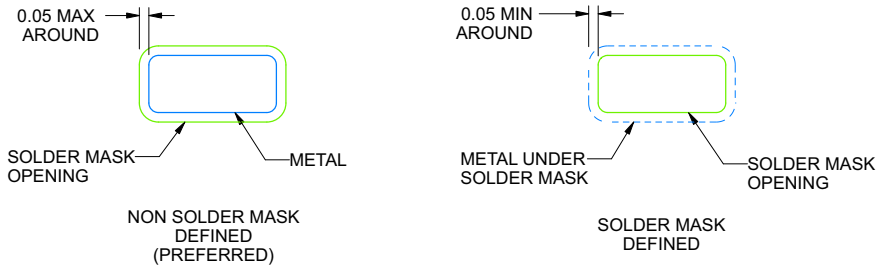

SOLDERMASK DETAILS

4224978/B 09/2021

NOTES: (continued)

5. Publication IPC-7351 may have alternate designs.
6. Solder mask tolerances between and around signal pads can vary based on board fabrication site.

Copyright © 2024 Texas Instruments Incorporated

EXAMPLE STENCIL DESIGN

DYA0002A **SOT (SOD-523) - 0.77 mm max height**

PLASTIC SMALL OUTLINE

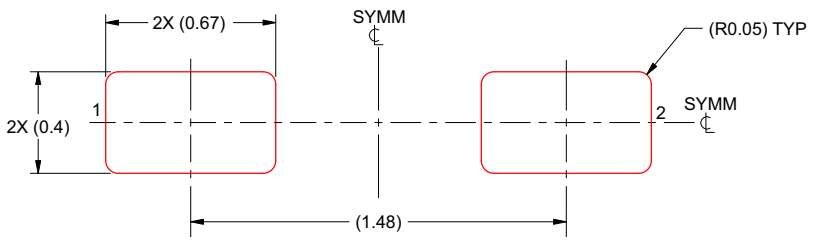

SOLDER PASTE EXAMPLE
BASED ON 0.1 mm THICK STENCIL
SCALE:40X

4224978/B 09/2021

NOTES: (continued)

7. Laser cutting apertures with trapezoidal walls and rounded corners may offer better paste release. IPC-7525 may have alternate design recommendations.
8. Board assembly site may have different recommendations for stencil design.

Copyright © 2024 Texas Instruments Incorporated

PACKAGE OUTLINE

DPY0002A

X1SON - 0.45 mm max height

PLASTIC SMALL OUTLINE - NO LEAD

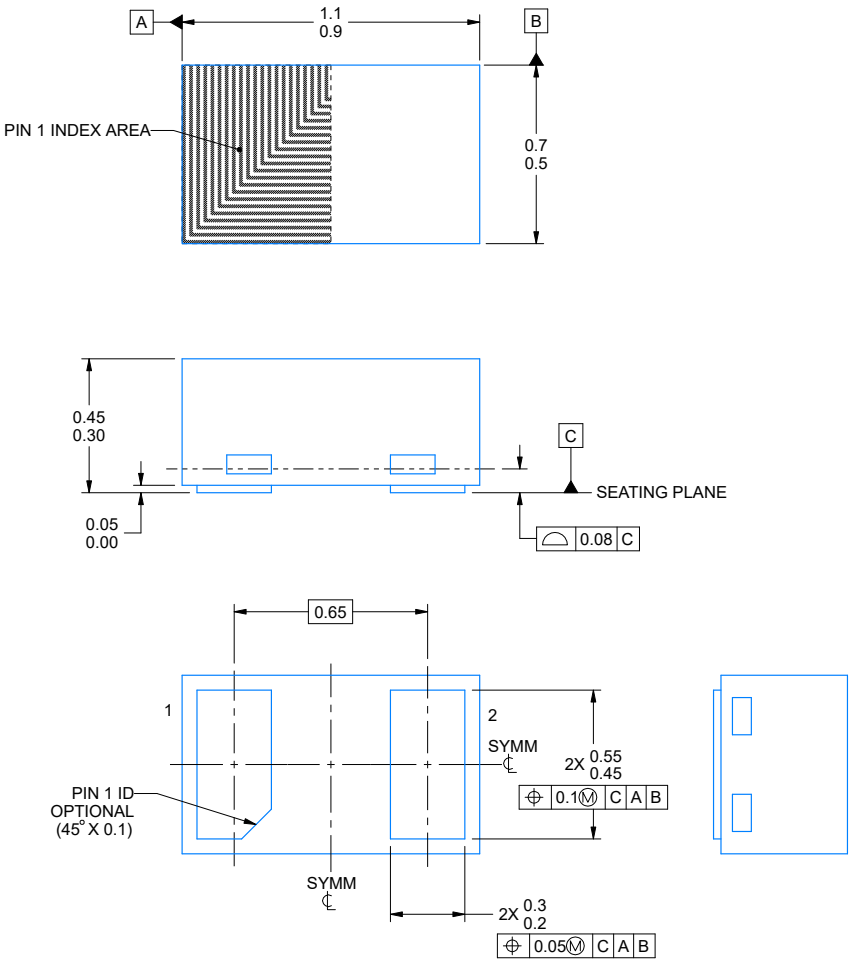

4224561/C 07/2024

NOTES:

1. All linear dimensions are in millimeters. Any dimensions in parenthesis are for reference only. Dimensioning and tolerancing per ASME Y14.5M
2. This drawing is subject to change without notice.

Copyright © 2024 Texas Instruments Incorporated

EXAMPLE BOARD LAYOUT

DPY0002A **X1SON - 0.45 mm max height**

PLASTIC SMALL OUTLINE - NO LEAD

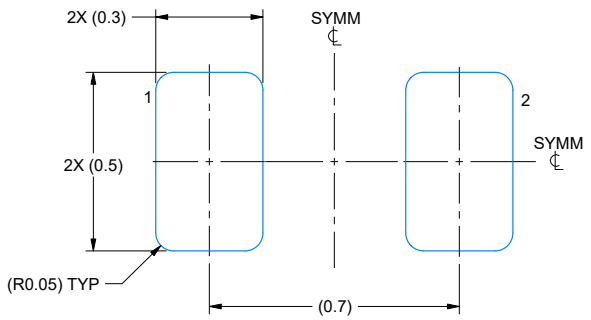

LAND PATTERN EXAMPLE
EXPOSED METAL SHOWN
SCALE:60X

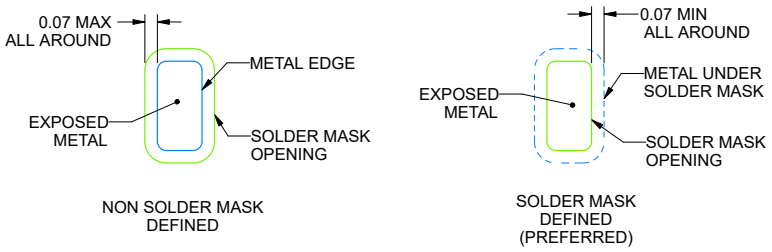

SOLDER MASK DETAILS

4224561/C 07/2024

NOTES: (continued)

3. For more information, see Texas Instruments literature number SLUA271 (www.ti.com/lit/slua271).
4. Vias are optional depending on application, refer to device data sheet. If any vias are implemented, refer to their locations shown on this view. It is recommended that vias under paste be filled, plugged or tented.

Copyright © 2024 Texas Instruments Incorporated

EXAMPLE STENCIL DESIGN

DPY0002A **X1SON - 0.45 mm max height**

PLASTIC SMALL OUTLINE - NO LEAD

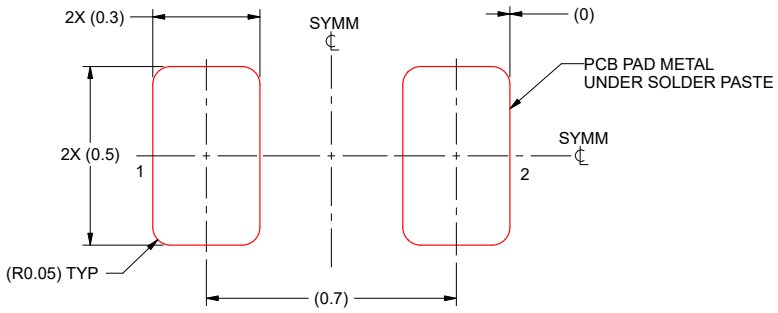

SOLDER PASTE EXAMPLE
BASED ON 0.1 mm THICK STENCIL
SCALE:60X

4224561/C 07/2024

NOTES: (continued)

5. Laser cutting apertures with trapezoidal walls and rounded corners may offer better paste release. IPC-7525 may have alternate design recommendations.

Copyright © 2024 Texas Instruments Incorporated

PACKAGING INFORMATION

Orderable part number	Status (1)	Material type (2)	Package | Pins	Package qty | Carrier	RoHS (3)	Lead finish/ Ball material (4)	MSL rating/ Peak reflow (5)	Op temp (°C)	Part marking (6)
TPD1E10B06DPYR	Active	Production	X1SON (DPY) | 2	10000 | LARGE T&R	Yes	NIPDAU	Level-1-260C-UNLIM	-40 to 125	(B1, B2, B6, BI)
TPD1E10B06DPYR.B	Active	Production	X1SON (DPY) | 2	10000 | LARGE T&R	Yes	NIPDAU	Level-1-260C-UNLIM	-40 to 125	(B1, B2, B6, BI)
TPD1E10B06DPYRG4	Active	Production	X1SON (DPY) | 2	10000 | LARGE T&R	Yes	NIPDAU	Level-1-260C-UNLIM	-40 to 125	B1
TPD1E10B06DPYRG4.B	Active	Production	X1SON (DPY) | 2	10000 | LARGE T&R	Yes	NIPDAU	Level-1-260C-UNLIM	-40 to 125	B1
TPD1E10B06DPYT	Last Time Buy	Production	X1SON (DPY) | 2	250 | SMALL T&R	Yes	NIPDAU	Level-1-260C-UNLIM	-40 to 125	(B1, B2, B6, BI)
TPD1E10B06DPYT.B	Last Time Buy	Production	X1SON (DPY) | 2	250 | SMALL T&R	Yes	NIPDAU	Level-1-260C-UNLIM	-40 to 125	(B1, B2, B6, BI)
TPD1E10B06DYAR	Active	Production	SOT-5X3 (DYA) | 2	3000 | LARGE T&R	Yes	SN	Level-3-260C-168 HR	-40 to 125	1KF
TPD1E10B06DYAR.B	Active	Production	SOT-5X3 (DYA) | 2	3000 | LARGE T&R	Yes	SN	Level-3-260C-168 HR	-40 to 125	1KF

(1) **Status:** For more details on status, see our product life cycle.

(2) **Material type:** When designated, preproduction parts are prototypes/experimental devices, and are not yet approved or released for full production. Testing and final process, including without limitation quality assurance, reliability performance testing, and/or process qualification, may not yet be complete, and this item is subject to further changes or possible discontinuation. If available for ordering, purchases will be subject to an additional waiver at checkout, and are intended for early internal evaluation purposes only. These items are sold without warranties of any kind.

(3) **RoHS values:** Yes, No, RoHS Exempt. See the TI RoHS Statement for additional information and value definition.

(4) **Lead finish/Ball material:** Parts may have multiple material finish options. Finish options are separated by a vertical ruled line. Lead finish/Ball material values may wrap to two lines if the finish value exceeds the maximum column width.

(5) **MSL rating/Peak reflow:** The moisture sensitivity level ratings and peak solder (reflow) temperatures. In the event that a part has multiple moisture sensitivity ratings, only the lowest level per JEDEC standards is shown. Refer to the shipping label for the actual reflow temperature that will be used to mount the part to the printed circuit board.

(6) **Part marking:** There may be an additional marking, which relates to the logo, the lot trace code information, or the environmental category of the part.

Multiple part markings will be inside parentheses. Only one part marking contained in parentheses and separated by a "~" will appear on a part. If a line is indented then it is a continuation of the previous line and the two combined represent the entire part marking for that device.

Important Information and Disclaimer: The information provided on this page represents TI's knowledge and belief as of the date that it is provided. TI bases its knowledge and belief on information provided by third parties, and makes no representation or warranty as to the accuracy of such information. Efforts are underway to better integrate information from third parties. TI has taken and continues to take reasonable steps to provide representative

and accurate information but may not have conducted destructive testing or chemical analysis on incoming materials and chemicals. TI and TI suppliers consider certain information to be proprietary, and thus CAS numbers and other limited information may not be available for release.

In no event shall TI's liability arising out of such information exceed the total purchase price of the TI part(s) at issue in this document sold by TI to Customer on an annual basis.

OTHER QUALIFIED VERSIONS OF TPD1E10B06 :

- Automotive : TPD1E10B06-Q1

NOTE: Qualified Version Definitions:

- Automotive - Q100 devices qualified for high-reliability automotive applications targeting zero defects

TAPE AND REEL INFORMATION

REEL DIMENSIONS

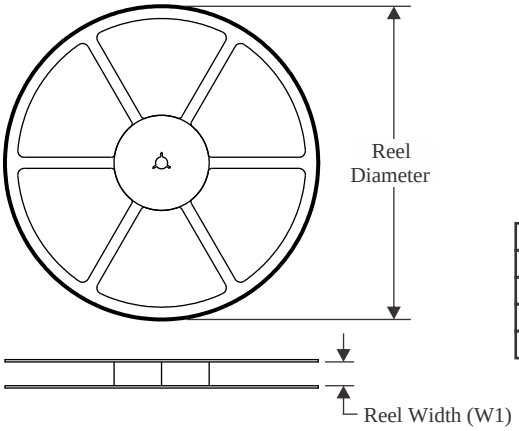

TAPE DIMENSIONS

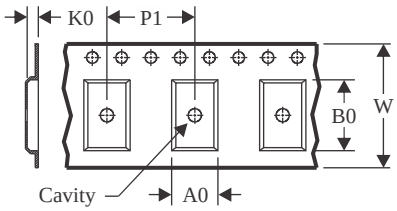

A0	Dimension designed to accommodate the component width
B0	Dimension designed to accommodate the component length
K0	Dimension designed to accommodate the component thickness
W	Overall width of the carrier tape
P1	Pitch between successive cavity centers

QUADRANT ASSIGNMENTS FOR PIN 1 ORIENTATION IN TAPE

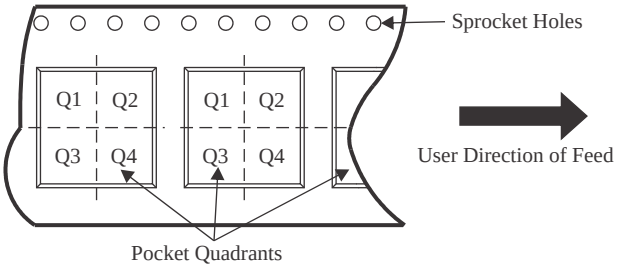

*All dimensions are nominal

Device	Package Type	Package Drawing	Pins	SPQ	Reel Diameter (mm)	Reel Width W1 (mm)	A0 (mm)	B0 (mm)	K0 (mm)	P1 (mm)	W (mm)	Pin1 Quadrant
TPD1E10B06DPYR	X1SON	DPY	2	10000	180.0	8.4	0.67	1.15	0.46	2.0	8.0	Q2
TPD1E10B06DPYRG4	X1SON	DPY	2	10000	180.0	8.4	0.67	1.15	0.46	2.0	8.0	Q2
TPD1E10B06DPYT	X1SON	DPY	2	250	178.0	8.4	0.7	1.15	0.47	2.0	8.0	Q1
TPD1E10B06DPYT	X1SON	DPY	2	250	180.0	9.5	0.66	1.15	0.66	2.0	8.0	Q1
TPD1E10B06DYAR	SOT-5X3	DYA	2	3000	178.0	9.5	0.5	1.94	0.73	2.0	8.0	Q1

TAPE AND REEL BOX DIMENSIONS

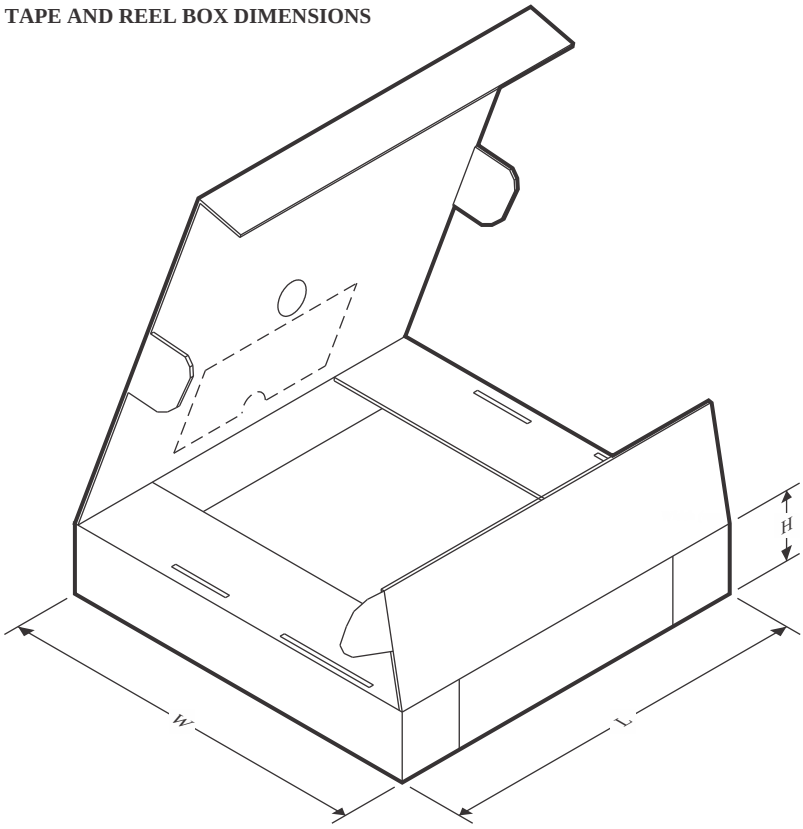

*All dimensions are nominal

Device	Package Type	Package Drawing	Pins	SPQ	Length (mm)	Width (mm)	Height (mm)
TPD1E10B06DPYR	X1SON	DPY	2	10000	210.0	185.0	35.0
TPD1E10B06DPYRG4	X1SON	DPY	2	10000	210.0	185.0	35.0
TPD1E10B06DPYT	X1SON	DPY	2	250	205.0	200.0	33.0
TPD1E10B06DPYT	X1SON	DPY	2	250	184.0	184.0	19.0
TPD1E10B06DYAR	SOT-5X3	DYA	2	3000	210.0	200.0	42.0

GENERIC PACKAGE VIEW

DPY 2

X1SON - 0.45 mm max height

1 x 0.6 mm

PLASTIC SMALL OUTLINE - NO LEAD

This image is a representation of the package family, actual package may vary.
Refer to the product data sheet for package details.

4231484/A

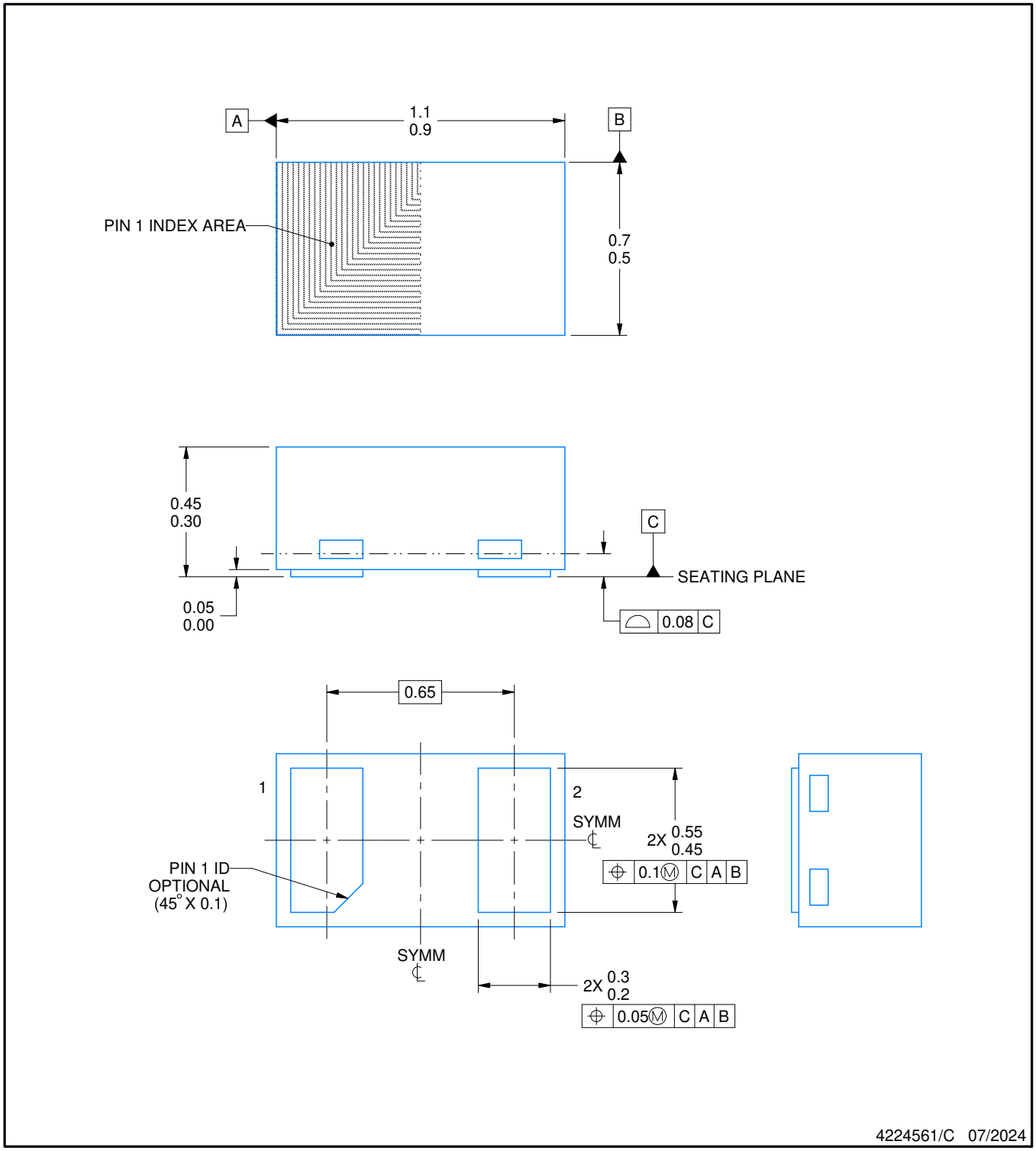

NOTES:

1. All linear dimensions are in millimeters. Any dimensions in parenthesis are for reference only. Dimensioning and tolerancing per ASME Y14.5M
2. This drawing is subject to change without notice.

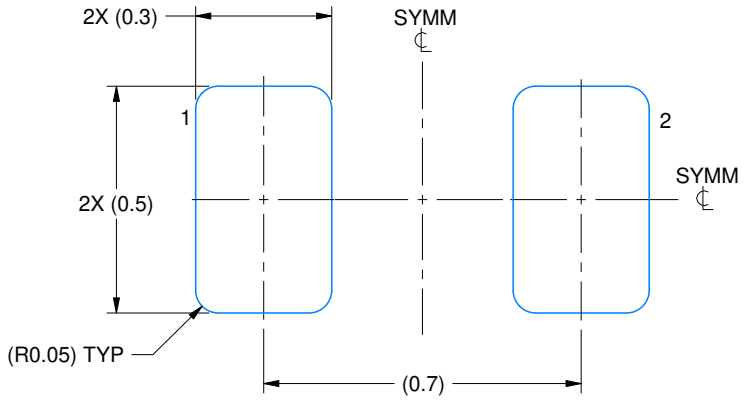

LAND PATTERN EXAMPLE
EXPOSED METAL SHOWN
SCALE:60X

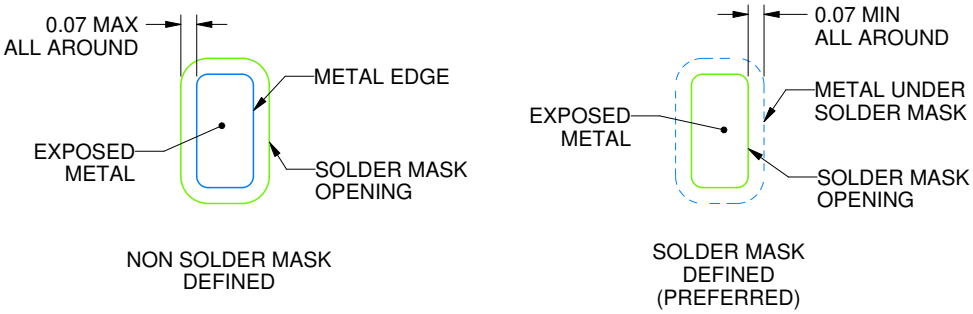

SOLDER MASK DETAILS

4224561/C 07/2024

NOTES: (continued)

3. For more information, see Texas Instruments literature number SLUA271 (www.ti.com/lit/slua271).
4. Vias are optional depending on application, refer to device data sheet. If any vias are implemented, refer to their locations shown on this view. It is recommended that vias under paste be filled, plugged or tented.

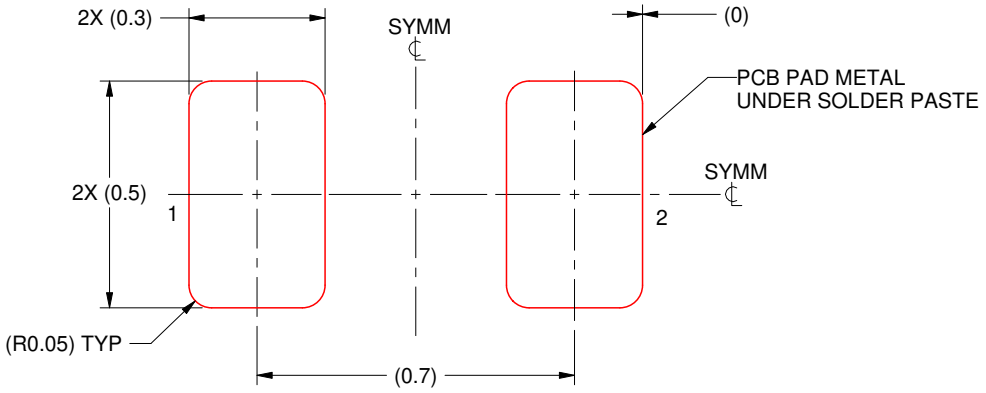

SOLDER PASTE EXAMPLE
BASED ON 0.1 mm THICK STENCIL
SCALE:60X

4224561/C 07/2024

NOTES: (continued)

5. Laser cutting apertures with trapezoidal walls and rounded corners may offer better paste release. IPC-7525 may have alternate design recommendations.

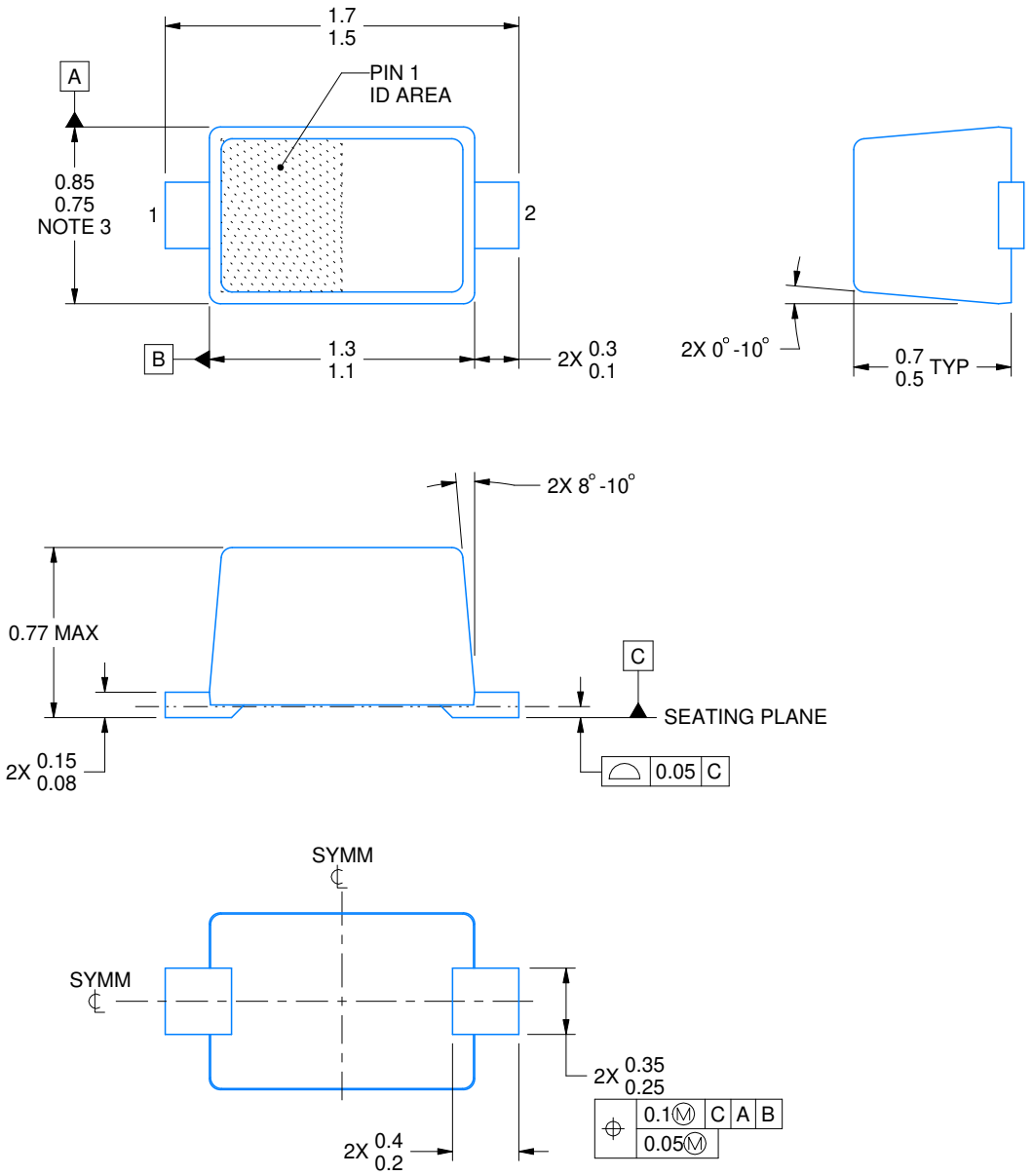

4224978/C 11/2024

NOTES:

1. All linear dimensions are in millimeters. Any dimensions in parenthesis are for reference only. Dimensioning and tolerancing per ASME Y14.5M.
2. This drawing is subject to change without notice.
3. This dimension does not include mold flash, protrusions, or gate burrs. Mold flash, protrusions, or gate burrs shall not exceed 0.15 mm per side.
4. Reference JEITA SC-79 registration except for package height

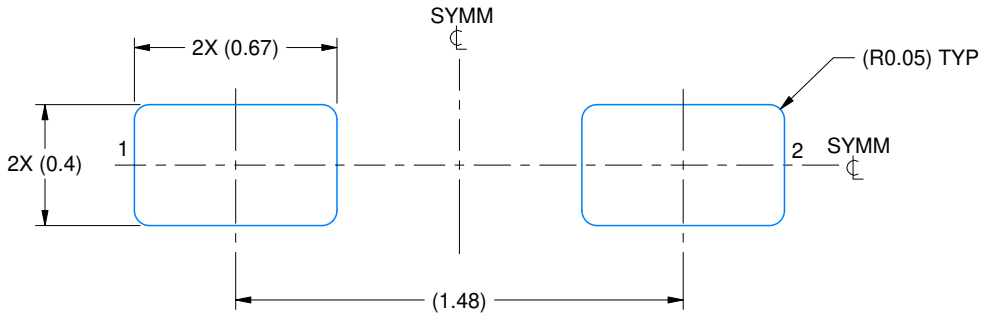

LAND PATTERN EXAMPLE
SCALE:40X

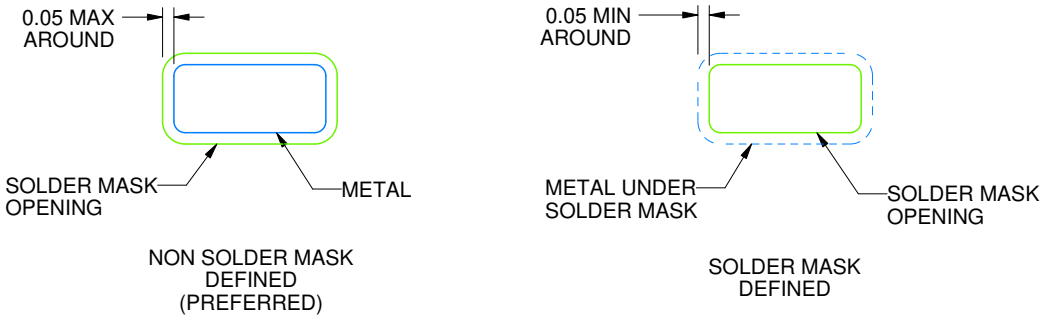

SOLDERMASK DETAILS

4224978/C 11/2024

NOTES: (continued)

5. Publication IPC-7351 may have alternate designs.
6. Solder mask tolerances between and around signal pads can vary based on board fabrication site.

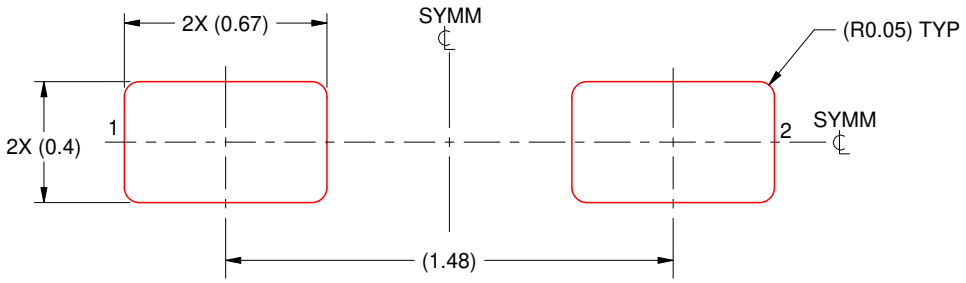

SOLDER PASTE EXAMPLE
BASED ON 0.1 mm THICK STENCIL
SCALE:40X

4224978/C 11/2024

NOTES: (continued)

7. Laser cutting apertures with trapezoidal walls and rounded corners may offer better paste release. IPC-7525 may have alternate design recommendations.
8. Board assembly site may have different recommendations for stencil design.

IMPORTANT NOTICE AND DISCLAIMER

TI PROVIDES TECHNICAL AND RELIABILITY DATA (INCLUDING DATASHEETS), DESIGN RESOURCES (INCLUDING REFERENCE DESIGNS), APPLICATION OR OTHER DESIGN ADVICE, WEB TOOLS, SAFETY INFORMATION, AND OTHER RESOURCES “AS IS” AND WITH ALL FAULTS, AND DISCLAIMS ALL WARRANTIES, EXPRESS AND IMPLIED, INCLUDING WITHOUT LIMITATION ANY IMPLIED WARRANTIES OF MERCHANTABILITY, FITNESS FOR A PARTICULAR PURPOSE OR NON-INFRINGEMENT OF THIRD PARTY INTELLECTUAL PROPERTY RIGHTS.

These resources are intended for skilled developers designing with TI products. You are solely responsible for (1) selecting the appropriate TI products for your application, (2) designing, validating and testing your application, and (3) ensuring your application meets applicable standards, and any other safety, security, regulatory or other requirements.

These resources are subject to change without notice. TI grants you permission to use these resources only for development of an application that uses the TI products described in the resource. Other reproduction and display of these resources is prohibited. No license is granted to any other TI intellectual property right or to any third party intellectual property right. TI disclaims responsibility for, and you fully indemnify TI and its representatives against any claims, damages, costs, losses, and liabilities arising out of your use of these resources.

TI’s products are provided subject to TI’s Terms of Sale, TI’s General Quality Guidelines, or other applicable terms available either on ti.com or provided in conjunction with such TI products. TI’s provision of these resources does not expand or otherwise alter TI’s applicable warranties or warranty disclaimers for TI products. Unless TI explicitly designates a product as custom or customer-specified, TI products are standard, catalog, general purpose devices.

TI objects to and rejects any additional or different terms you may propose.

Copyright © 2026, Texas Instruments Incorporated

Last updated 10/2025