TPL0102 Two 256-Taps Digital Potentiometers With Non-Volatile Memory

1 Features

- Two Potentiometers with 256-Position Resolution
- Non-volatile Memory Stores Wiper Settings
- 100 kΩ End-to-End Resistance (TPL0102-100)
- Fast Power-up Response Time to Wiper Setting: <100 µs
- ±0.5 LSB INL, ±0.25 LSB DNL (Voltage-Divider Mode)
- 4 ppm/°C Ratiometric Temperature Coefficient
- I^2C-compatible Serial Interface
- 2.7 V to 5.5 V Single-Supply Operation
- ±2.25 V to ±2.75 V Dual-Supply Operation
- Operating Temperature Range from –40°C to 85°C
- Shutdown Mode
- ESD Performance Tested Per JESD 22
  - 2000-V Human Body Model (A114-B, Class II)
  - 1000-V Charged-Device Model (C101)

2 Applications

- Adjustable Gain Amplifiers and Offset Trimming
- Adjustable Power Supplies
- Precision Calibration of Set Point Thresholds
- Sensor Trimming and Calibration
- Mechanical Potentiometer Replacement

3 Description

The TPL0102 has two linear-taper digital potentiometers (DPOTs) with 256 wiper positions. Each potentiometer can be used as a three-terminal potentiometer or as a two-terminal rheostat. The TPL0102-100 has an end-to-end resistance of 100 kΩ.

The TPL0102 has non-volatile memory (EEPROM) which can be used to store the wiper position. This is beneficial because the wiper position is stored even during power-off and is automatically reinstated after power-on. The internal registers of the TPL0102 can be accessed using the I^2C interface.

The TPL0102 is available in a 14-pin MicroQFN and 14-pin TSSOP package with a specified temperature range of –40°C to 85°C.

Device Information(1)

PART NUMBER	PACKAGE	BODY SIZE (NOM)
TPL0102	X2QFN (14)	2.00 mm × 2.00 mm
	TSSOP (14)	5.00 mm × 4.40 mm

(1) For all available packages, see the orderable addendum at the end of the data sheet.

Simplified Schematic

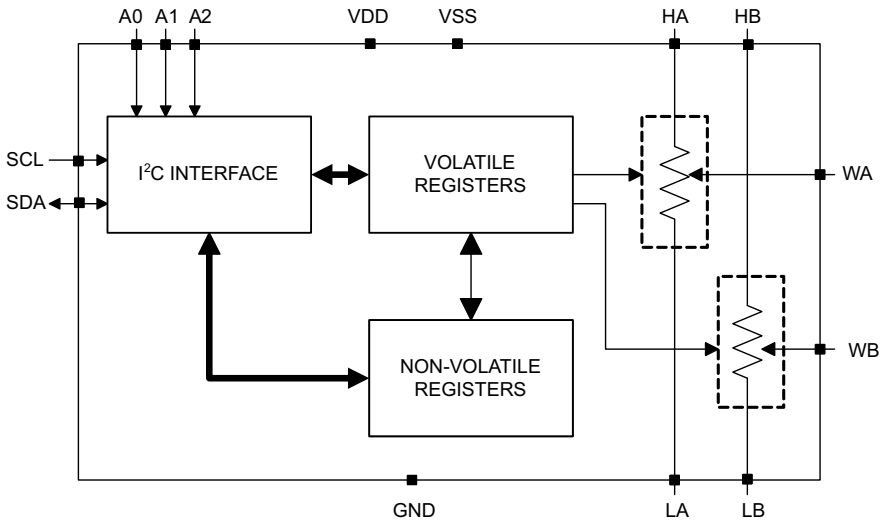

An IMPORTANT NOTICE at the end of this data sheet addresses availability, warranty, changes, use in safety-critical applications, intellectual property matters and other important disclaimers. PRODUCTION DATA.

Table of Contents

1 Features ... 1
2 Applications ... 1
3 Description ... 1
4 Revision History ... 2
5 Pin Configuration and Functions ... 3
6 Specifications ... 4
6.1 Absolute Maximum Ratings ... 4
6.2 ESD Ratings ... 4
6.3 Recommended Operating Conditions ... 4
6.4 Thermal Information ... 4
6.5 Electrical Characteristics ... 5
6.6 Operating Characteristics ... 6
6.7 Timing Requirements ... 7
6.8 Typical Characteristics ... 8
7 Detailed Description ... 11
7.1 Overview ... 11
7.2 Functional Block Diagram ... 12
7.3 Feature Description ... 12
7.4 Device Functional Modes ... 13
7.5 Programming with I^2C ... 20
7.6 Register Maps ... 25
8 Application and Implementation ... 28
8.1 Application Information ... 28
8.2 Typical Applications ... 28
9 Power Supply Recommendations ... 34
9.1 Power Sequence ... 34
9.2 Wiper Position Upon Power Up ... 34
9.3 Dual-Supply vs Single-Supply ... 34
10 Layout ... 35
10.1 Layout Guidelines ... 35
10.2 Layout Example ... 35
11 Device and Documentation Support ... 36
11.1 Community Resources ... 36
11.2 Trademarks ... 36
11.3 Electrostatic Discharge Caution ... 36
11.4 Glossary ... 36
12 Mechanical, Packaging, and Orderable Information ... 36

4 Revision History

NOTE: Page numbers for previous revisions may differ from page numbers in the current version.

Changes from Revision B (August 2011) to Revision C **Page**

- Added *ESD Ratings* table, *Feature Description* section, *Device Functional Modes*, *Application and Implementation* section, *Power Supply Recommendations* section, *Layout* section, *Device and Documentation Support* section, and *Mechanical, Packaging, and Orderable Information* section ... 1

Changes from Revision A (March 2011) to Revision B **Page**

- Added *Recommended Operating Conditions* table. ... 4

Copyright © 2011–2015, Texas Instruments Incorporated

5 Pin Configuration and Functions

RUC Package
14-Pin MicroQFN
Top View

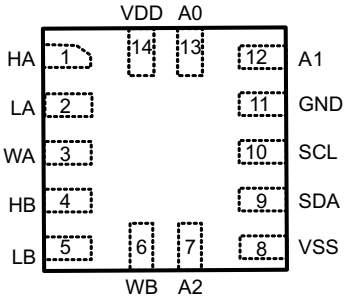

PW Package
14-Pin TSSOP
Top View

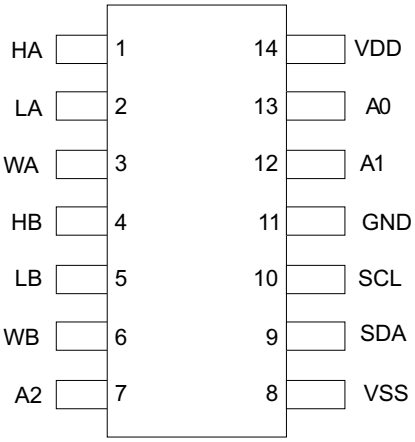

Pin Functions

PIN		I/O	DESCRIPTION
NAME	NO.		
HA	1	I/O	High terminal of potentiometer A
LA	2	I/O	Low terminal of potentiometer A
WA	3	I/O	Wiper terminal of potentiometer A
HB	4	I/O	High terminal of potentiometer B
LB	5	I/O	Low terminal of potentiometer B
WB	6	I/O	Wiper terminal of potentiometer B
A2	7	I	I^2C address bit 2
VSS	8	–	Negative power supply pin (Dual-Supply Operation) or tied to GND (Single-Supply Operation)
SDA	9	I/O	I^2C data I/O
SCL	10	I	I^2C clock Input
GND	11	–	Ground
A1	12	I	I^2C address bit 1
A0	13	I	I^2C address bit 0
VDD	14	–	Positive power supply pin

Copyright © 2011–2015, Texas Instruments Incorporated

6 Specifications

6.1 Absolute Maximum Ratings (1)(2)(3)

		MIN	MAX	UNIT
V_{DD} to GND	Supply voltage	–0.3	7	V
V_{SS} to GND		–7	0.3	V
V_{DD} to V_{SS}			7	V
V_H, V_L, V_W	Voltage at resistor terminals	V_{SS} – 0.3	V_{DD} + 0.3	V
V_I	Digital input voltage	–0.3	V_{DD} + 0.3	V
I_H, I_L, I_W	Pulse current		±20	mA
	Continuous current		±2	mA
T_{stg}	Storage temperature	-65	150	°C

(1) Stresses above these ratings may cause permanent damage. Exposure to absolute maximum conditions for extended periods may degrade device reliability. These are stress ratings only, and functional operation of the device at these or any other conditions beyond those specified is not implied.
(2) The algebraic convention, whereby the most negative value is a minimum and the most positive value is a maximum.
(3) All voltages are with respect to ground, unless otherwise specified.

6.2 ESD Ratings

			VALUE	UNIT
$V_{(ESD)}$	Electrostatic discharge	Human-body model (HBM), per ANSI/ESDA/JEDEC JS-001 (1)	±2000	V
		Charged-device model (CDM), per JEDEC specification JESD22-C101 (2)	±1000	

(1) JEDEC document JEP155 states that 500-V HBM allows safe manufacturing with a standard ESD control process. Manufacturing with less than 500-V HBM is possible with the necessary precautions.
(2) JEDEC document JEP157 states that 250-V CDM allows safe manufacturing with a standard ESD control process. Manufacturing with less than 250-V CDM is possible with the necessary precautions.

6.3 Recommended Operating Conditions

over operating free-air temperature range (unless otherwise noted)

		MIN	MAX	UNIT
V_{DD}	Single supply operation (V_{SS} = 0 V)	2.7	5.5	V
	Dual supply operation (V_{SS} = –V_{DD})	2.25	2.75	
V_H, V_L	Terminal voltage range	V_{SS}	V_{DD}	V
V_{IH}	Digital input voltage high (SCL, SDA, A0, A1, A2)	0.7 × V_{DD}	5.5	V
V_{IL}	Digital input voltage low (SCL, SDA, A0, A1, A2)	0	0.3 × V_{DD}	V
I_W	Wiper current		±2	mA
T_A	Ambient temperature	–40	85	°C

6.4 Thermal Information

THERMAL METRIC (1)		TPL0102		UNIT
		PW (TSSOP)	RUC (X2QFN)	
		14 PINS	14 PINS	
$R_{\theta JA}$	Junction-to-ambient thermal resistance	112.9	119.4	°C/W
$R_{\theta JC(top)}$	Junction-to-case (top) thermal resistance	39.9	51.3	°C/W
$R_{\theta JB}$	Junction-to-board thermal resistance	55.9	59.0	°C/W
ψ_{JT}	Junction-to-top characterization parameter	3.5	1.2	°C/W
ψ_{JB}	Junction-to-board characterization parameter	55.2	59.0	°C/W

(1) For more information about traditional and new thermal metrics, see the *IC Package Thermal Metrics* application report, SPRA953.

Copyright © 2011–2015, Texas Instruments Incorporated

6.5 Electrical Characteristics

V_{DD} = 2.7 V to 5.5 V, V_{SS} = 0 V, V_H = V_{DD}, V_L = GND, T_A = –40°C to 85°C (unless otherwise noted). Typical values are at V_{DD} = 5 V, T_A = 25°C (unless otherwise noted).

PARAMETER		TEST CONDITIONS	MIN	TYP	MAX	UNIT
R_{TOT}	End-to-End resistance (Between H and L Terminals)		80	100	120	kΩ
R_H, R_L	Terminal resistance			60	200	Ω
R_W	Wiper resistance			25	100	Ω
C_H, C_L (1) (2)	Terminal capacitance			22		pF
C_W (1) (2)	Wiper capacitance			16		pF
I_{LKG}	Terminal leakage current	V_H = V_{SS} to V_{DD}, V_L = Floating OR V_L = V_{SS} to V_{DD}, V_H = Floating		0.1	1	µA
TC_R	Resistance temperature coefficient	Input Code = 0x80h		92		ppm/°C
$R_{TOT,MATCH}$	Channel-to-channel resistance match			0.1		%
Voltage Divider Mode						
INL (3) (4)	Integral non-linearity		–0.5		0.5	LSB
DNL (3) (5)	Differential non-linearity		–0.25		0.25	LSB
ZS_{ERROR} (6) (7)	Zero-scale error		0	0.1	2	LSB
FS_{ERROR} (6) (8)	Full-scale error		–2	–0.1	0	LSB
$MATCH_{VDM}$ (6) (9)	Channel-to-Channel matching	Wiper at the same tap position, same voltage at all H and same voltage at all L terminals	–2		2	LSB
TC_{VDM}	Ratiometric temperature coefficient	Wiper set at mid-scale		4		ppm/°C
BW	Bandwidth	Wiper set at mid-scale C_{LOAD} = 10 pF		229		kHz
t_{SW}	Wiper setting time			3.6		µs
THD	Total harmonic distortion	V_H = 1 V_{RMS} at 1 kHz, V_L = (V_{DD} – V_{SS})/2, Measurement at pin W		0.03		%
X_{TALK}	Cross talk	f_H = 1 kHz, V_L = GND, Measurement at pin W		–82		dB

(1) Terminal and Wiper Capacitance extracted from self admittance of three port network measurement

$$Y_{ii} = \frac{I_i}{V_i}\Big|_{V_k=0 \text{ for } k\neq i}$$

(2) Digital Potentiometer Macromodel

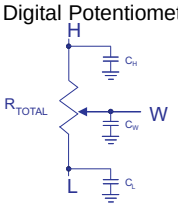

(3) LSB = ($V_{MEAS[code\ 255]}$ – $V_{MEAS[code\ 0]}$) / 255
(4) INL = (($V_{MEAS[code\ x]}$ – $V_{MEAS[code\ 0]}$) / LSB) - [code x]
(5) DNL = (($V_{MEAS[code\ x]}$ – $V_{MEAS[code\ x-1]}$) / LSB) – 1
(6) IDEAL_LSB = (V_H-V_L) / 256
(7) ZS_{ERROR} = $V_{MEAS[code\ 0]}$ / IDEAL_LSB
(8) FS_{ERROR} = [($V_{MEAS[code\ 255]}$ – (V_H-V_L)) / IDEAL_LSB] + 1
(9) $MATCH_{VDM}$ = ($V_{MEAS_A[code\ x]}$ – $V_{MEAS_B[code\ x]}$) / IDEAL_LSB

Copyright © 2011–2015, Texas Instruments Incorporated

Electrical Characteristics (continued)

V_{DD} = 2.7 V to 5.5 V, V_{SS} = 0 V, V_H = V_{DD}, V_L = GND, T_A = –40°C to 85°C (unless otherwise noted). Typical values are at V_{DD} = 5 V, T_A = 25°C (unless otherwise noted).

PARAMETER		TEST CONDITIONS	MIN	TYP	MAX	UNIT
RHEOSTAT MODE (Measurements between W and L with H not connected, or between W and H with L not connected)						
RINL (10) (11)	Integral non-linearity		–1		1	LSB
RDNL (10) (12)	Differential non-linearity		–0.5		0.5	LSB
$OFFSET_{RM}$ (13) (14)	Offset		0	0.2	2	LSB
$MATCH_{RM}$ (13) (15)	Channel-to-Channel matching		–2		2	LSB
BW	Bandwidth	Code = 0x00h, L Floating, Input applied to W, Measure at H, C_{LOAD} = 10 pF		54		kHz

(10) RLSB = ($R_{MEAS[code\ 255]}$ – $R_{MEAS[code\ 0]}$) / 255
(11) RINL =(($R_{MEAS[code\ x]}$ – $R_{MEAS[code\ 0]}$) / RLSB) - [code x]
(12) RDNL =(($R_{MEAS[code\ x]}$ – $R_{MEAS[code\ x-1]}$) / RLSB)– 1
(13) IDEAL_RLSB = R_{TOT} / 256
(14) $OFFSET_{RM}$ = $R_{MEAS[code\ 0]}$ / IDEAL_RLSB
(15) $MATCH_{RM}$ = ($R_{MEAS_A[code\ x]}$ – $R_{MEAS_B[code\ x]}$) / IDEAL_RLSB

6.6 Operating Characteristics

V_{DD} = 2.7 V to 5.5 V, V_{SS} = 0 V, V_H = V_{DD}, V_L = GND, T_A = –40°C to 85°C (unless otherwise noted). Typical values are at V_{DD} = 5 V, T_A = 25°C (unless otherwise noted).

PARAMETER		TEST CONDITIONS	MIN	TYP	MAX	UNIT
$I_{DD(STBY)}$	V_{DD} standby current	V_{DD} = 2.75 V, V_{SS} = –2.75, I^2C interface in standby mode		0.2	1	µA
$I_{SS(STBY)}$	V_{SS} standby current	V_{DD} = 2.75 V, V_{SS} = –2.75, I^2C interface in standby mode	–1	–0.2		µA
$I_{DD(SHUTDOWN)}$	V_{DD} shutdown current	V_{DD} = 2.75 V, V_{SS} = –2.75, I^2C interface in standby mode		0.2	1	µA
$I_{SS(SHUTDOWN)}$	V_{SS} shutdown current	V_{DD} = 2.75 V, V_{SS} = –2.75, I^2C interface in standby mode	–1	–0.2		µA
I_{DD}	V_{DD} current during non-volatile write	V_{DD} = 2.75 V, V_{SS} = –2.75		200		µA
I_{SS}	V_{SS} current during non-volatile write	V_{DD} = 2.75 V, V_{SS} = –2.75	–200			µA
$I_{LKG(DIG)}$	Digital pins leakage current (A0, A1, A2, SDA, and SCL)		–1		1	µA
V_{POR}	Power-on recall voltage	Minimum V_{DD} at which memory recall occurs		23		V
EEPROM Specification						
	EEPROM endurance			100 000		Cycles
	EEPROM retention	T_A = 85°C		100		Years
t_{WC}	Non-volatile write cycle time			20		ms
Wiper Timing Characteristics						
$t_{(WRT)}$	Wiper response time	SCL falling edge of last bit of wiper data byte to wiper new position		600		ns
$t_{(SR)}$	Wiper position recall time from shut-down mode	SCL falling edge of last bit of ACR data byte to wiper stored position and H connection		800		ns
$t_{(D)}$	Power-up delay	V_{DD} above V_{POR}, to wiper initial value register recall completed, and I^2C interface in standby mode		35	100	µs
$C_{(PIN)}$	Pin capacitance	A0, A1, A2, SDA, SCL pins		7		pF

Copyright © 2011–2015, Texas Instruments Incorporated

Operating Characteristics (continued)

V_{DD} = 2.7 V to 5.5 V, V_{SS} = 0 V, V_H = V_{DD}, V_L = GND, T_A = –40°C to 85°C (unless otherwise noted). Typical values are at V_{DD} = 5 V, T_A = 25°C (unless otherwise noted).

PARAMETER		TEST CONDITIONS	MIN	TYP	MAX	UNIT
I²C Interface Specifications						
V_{IH}	Input high voltage		0.7 x V_{DD}		5.5	V
V_{IL}	Input low voltage		0		0.3 x V_{DD}	V
V_{OL}	Output low voltage	SDA pin, I_{OL} = 4 mA			0.4	V
C_{IN}	Pin capacitance	A0, A1, A2, SDA, SCL pins		7		pF

6.7 Timing Requirements

V_{DD} = 2.7 V to 5.5 V, V_{SS} = 0 V, V_H = V_{DD}, V_L = GND, T_A = –40°C to 85°C (unless otherwise noted). Typical values are at V_{DD} = 5 V, T_A = 25°C (unless otherwise noted).

		STANDARD MODE I²C BUS		FAST MODE I²C BUS		UNIT
		MIN	MAX	MIN	MAX	
I²C Interface Timing Requirements						
f_{SCL}	I²C clock frequency	0	100	0	400	kHz
t_{SCH}	I²C clock high time	4		0.6		µs
t_{SCL}	I²C clock low time	4.7		1.3		µs
tsp	I²C spike time	0	50	0	50	ns
t_{SDS}	I²C serial data setup time	250		100		ns
t_{SDH}	I²C serial data hold time	0		0		ns
t_{ICR}	I²C input rise time		1000	20 + 0.1C_b (1)	300	ns
t_{ICF}	I²C input fall time		300	20 + 0.1C_b (1)	300	ns
t_{ICF}	I²C output fall time, 10 pF to 400 pF bus		300	20 + 0.1C_b (1)	300	ns
t_{BUF}	I²C bus free time between stop and start	4.7		1.3		µs
t_{STS}	I²C start or repeater start condition setup time	4.7		1.3		µs
t_{STH}	I²C start or repeater start condition hold time	4		0.6		µs
t_{SPS}	I²C stop condition setup time	4		0.6		µs
$t_{VD(DATA)}$	Valid data time, SCL low to SDA output valid		1		1	µs
$3t_{VD(ACK)}$	Valid data time of ACK condition, ACK signal from SCL low to SDA (out) low		1		1	µs

(1) C_b = total capacitance of one bus line in pF

Copyright © 2011–2015, Texas Instruments Incorporated

6.8 Typical Characteristics

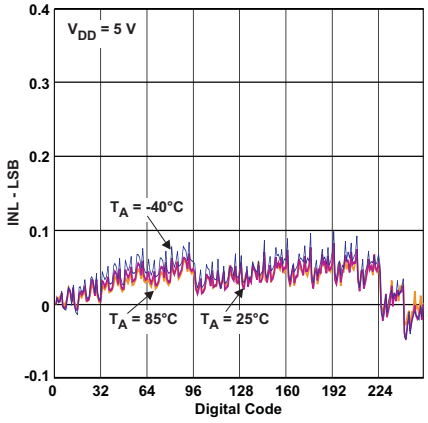

Figure 1. Voltage Divider Mode INL vs Digital Code (V_{DD} = 5 V)

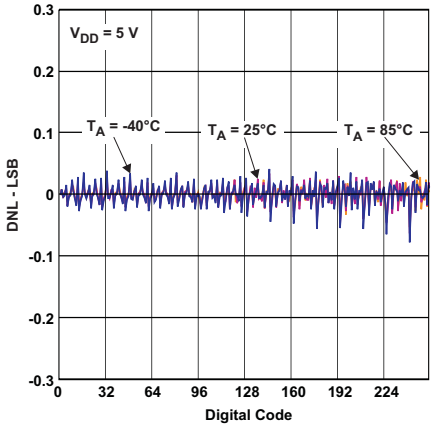

Figure 2. Voltage Divider Mode DNL vs Digital Code (V_{DD} = 5 V)

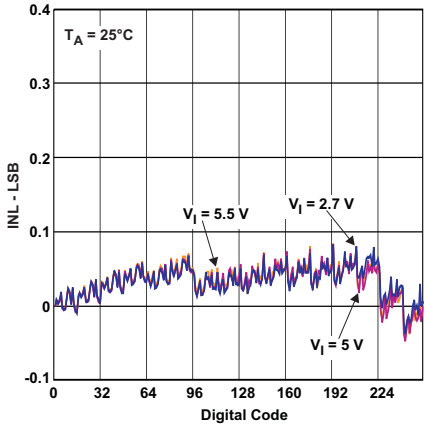

Figure 3. Voltage Divider Mode INL vs Digital Code (25°C)

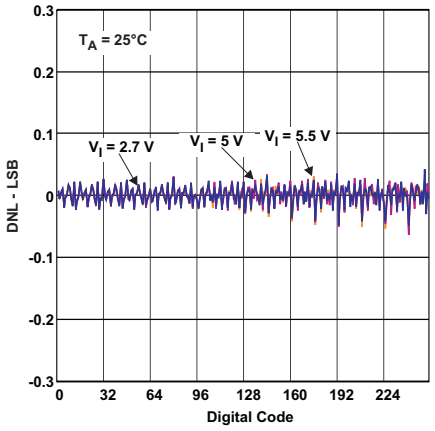

Figure 4. Voltage Divider Mode DNL vs Digital Code (25°C)

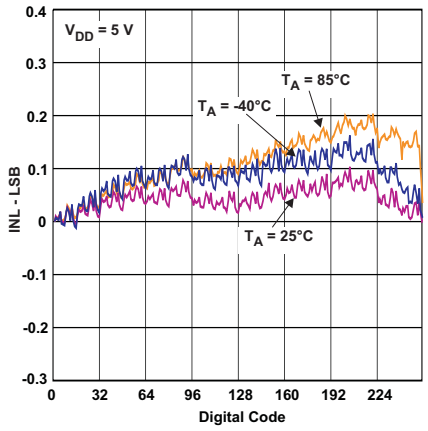

Figure 5. Rheostat Mode RINL vs Digital Code (V_{DD} = 5 V)

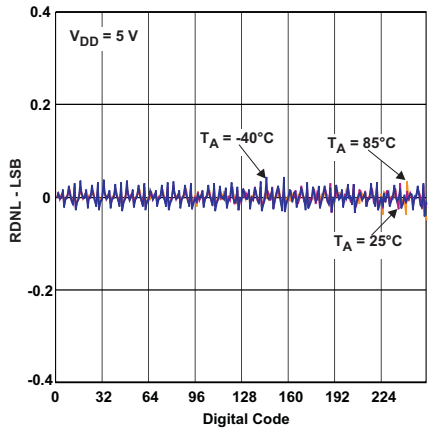

Figure 6. Rheostat Mode RDNL vs Digital Code (V_{DD} = 5 V)

Copyright © 2011–2015, Texas Instruments Incorporated

Typical Characteristics (continued)

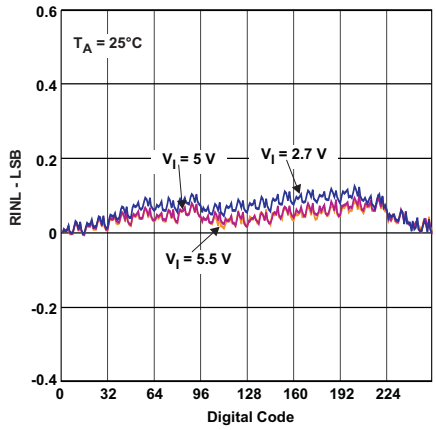

Figure 7. Rheostat Mode RINL vs Digital Code (25°C)

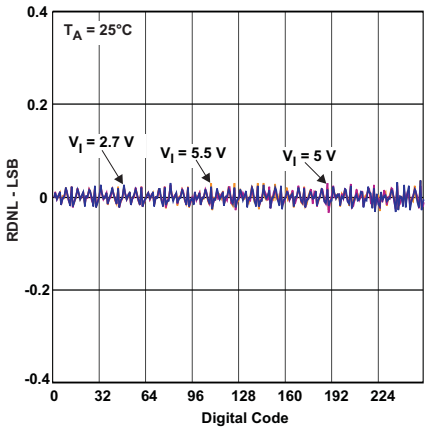

Figure 8. Rheostat Mode RDNL vs Digital Code (25°C)

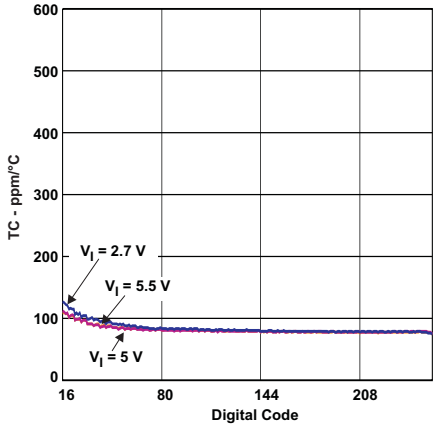

Figure 9. Rheostat Mode TC_R vs Digital Code

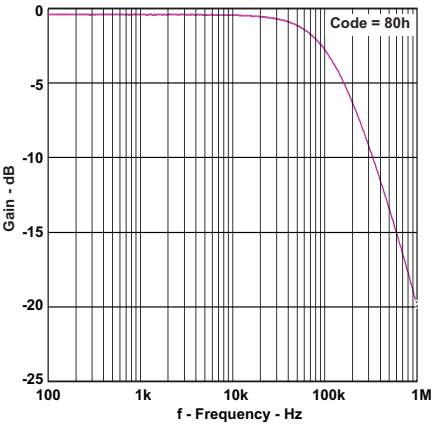

Figure 10. Rheostat Mode Gain vs Frequency

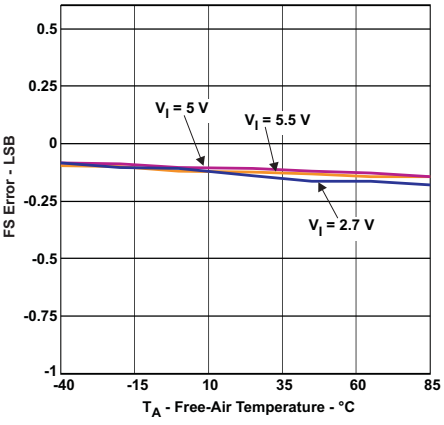

Figure 11. Voltage Divider Mode FS Error vs Temperature

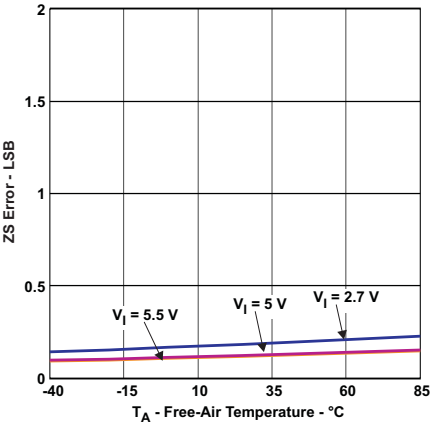

Figure 12. Voltage Divider Mode ZS Error vs Temperature

Copyright © 2011–2015, Texas Instruments Incorporated

Typical Characteristics (continued)

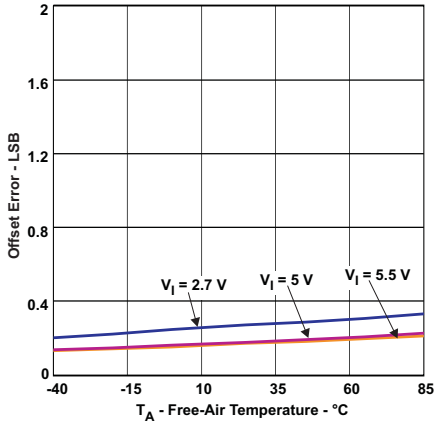

Figure 13. Rheostat Mode Offset Error vs Temperature

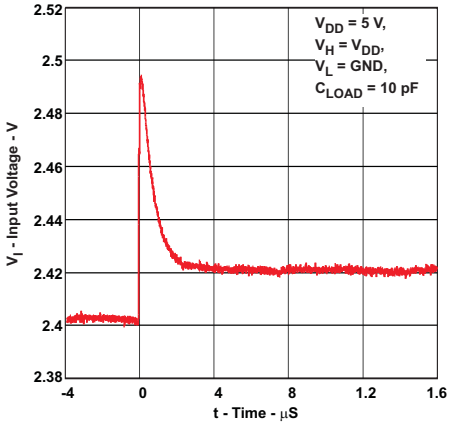

Figure 14. Midscale Wiper Glitch (0x7Fh to 0x80h)

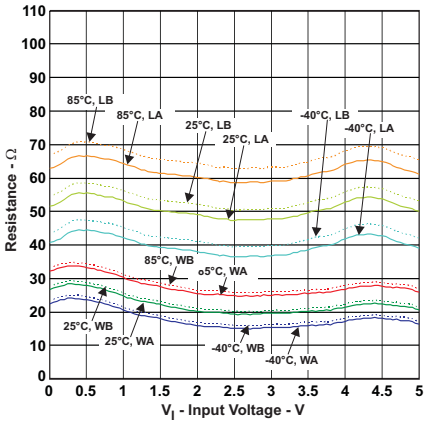

Figure 15. Wiper to Low Terminal Resistance (V_{DD} = 5 V)

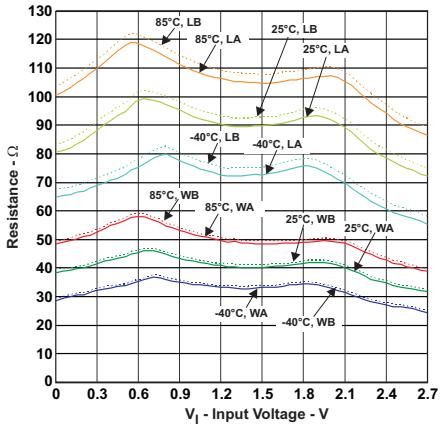

Figure 16. Wiper to Low Terminal Resistance (V_{DD} = 2.7 V)

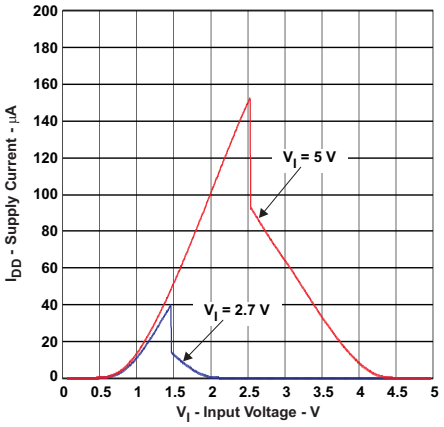

Figure 17. Supply Current vs Digital Input Voltage

Copyright © 2011–2015, Texas Instruments Incorporated

7 Detailed Description

7.1 Overview

The TPL0102 has two linear-taper digital potentiometers with 256 wiper positions and an end-to-end resistance of 100 kΩ. Each potentiometer can be used as a three-terminal potentiometer or as a two-terminal rheostat. The two potentiometers can both be used in Voltage Divider Mode, Rheostat Mode, or Shutdown Mode at the same time, or any combination of those modes. For example, potentiometer A can be used in Voltage Divider Mode and potentiometer B can be used in Voltage Divider Mode, or potentiometer A can be used in Voltage Divider Mode and potentiometer B can be used in Rheostat Mode. The two potentiometers are functionally independent of one another.

The High (H) and Low (L) terminals of the TPL0102 are equivalent to the fixed terminals of a mechanical potentiometer. The H and L terminals do not have any polarity restrictions (H can be at a higher voltage than L, or L can be at a higher voltage than H). The position of the wiper (W) terminal is controlled by the value in the Wiper Resistance (WR) 8-bit register. When the WR register contains all zeroes (zero-scale), the wiper terminal is closest to its L terminal. As the value of the WR register increases from all zeroes to all ones (full-scale), the wiper moves monotonically from the position closest to L terminal to the position closest to the H terminal. At the same time, the resistance between W and L increases monotonically, whereas the resistance between W and H decreases monotonically.

The TPL0102 has non-volatile memory (EEPROM) which can be used to store the wiper position. When the device is powered down, the last value stored in the Initial Value Register (IVR) will be maintained in the non-volatile memory. When power is restored, the contents of the IVR are automatically recalled and loaded into the corresponding WR register to set the wipers . The internal registers of the TPL0102 can be accessed using the I^2C interface. The factory-programmed default value for the IVR upon power up is 0x80h (1000 0000). The WR register can be written to directly without first writing to the IVR, depending upon the setting of the volatile memory (VOL) in the *ACR (Access Control Register)*. If the WR register is written to directly without writing to the IVR as well, this results in the wiper position changing to a desired position, but the position will not be stored in memory and will not be reloaded upon powering up the device.

With one TPL0102, a variable resistor with 512 settings can be used since there are two potentiometers in one TPL0102. In order to achieve this, the two potentiometers should be in Rheostat Mode and wired so that terminal L of potentiometer B is tied to terminal W of potentiometer A. This will provide 512 settings between terminal L of potentiometer A and terminal W of potentiometer B.

Copyright © 2011–2015, Texas Instruments Incorporated

7.2 Functional Block Diagram

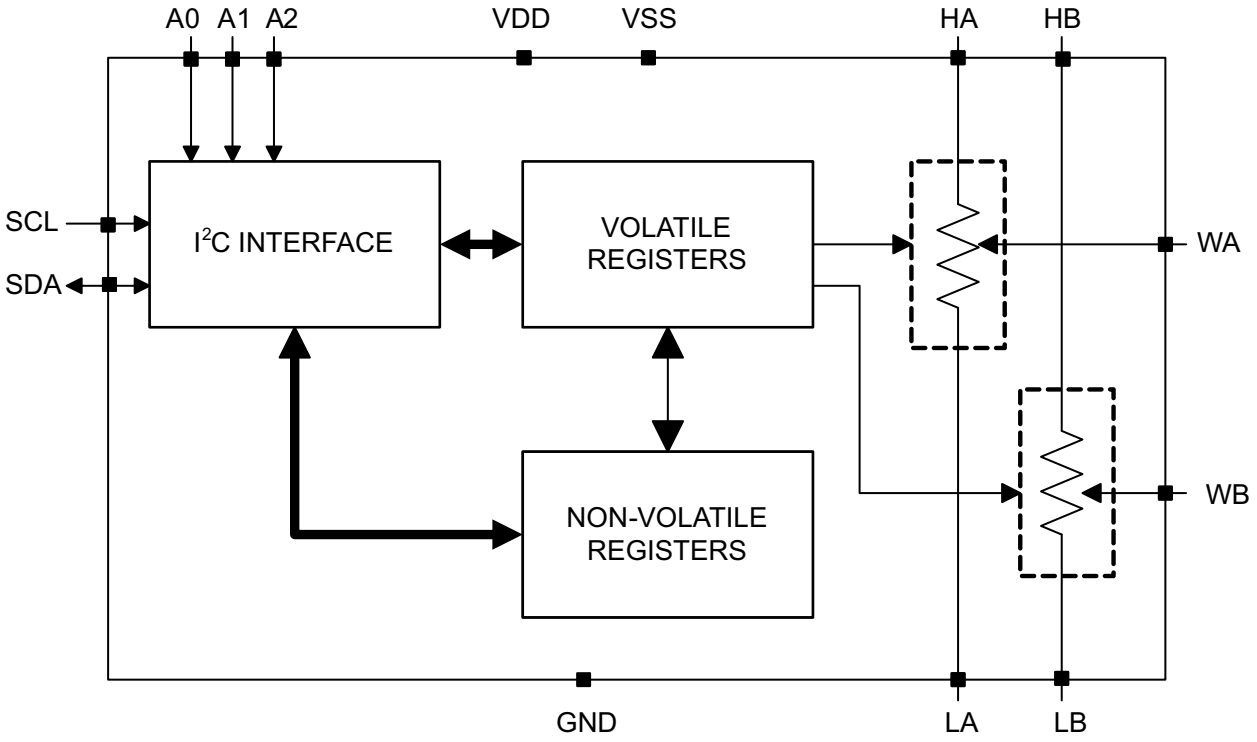

7.3 Feature Description

The TPL0102 has two linear-taper digital potentiometers (DPOTs) with 256 wiper positions. Each potentiometer can be used as a three-terminal potentiometer or a two-terminal rheostat. The TPL0102-100 has an end-to-end resistance of 100 kΩ with a 20% end-to-end resistance tolerance. Non-volatile memory (EEPROM) can be used to store the wiper position allowing the wiper position to be stored even during power-off and automatically reinstated after power-on. The internal registers of the TPL0102 can be accessed using the I^2C digital interface. The TPL0102 is available in a 14-pin MicroQFN (2.00 mm x 2.00 mm) and 14-pin TSSOP package.

Copyright © 2011–2015, Texas Instruments Incorporated

7.4 Device Functional Modes

7.4.1 Shutdown Mode

The TPL0102 can be put in Shutdown Mode by executing the proper command in the *ACR (Access Control Register)*. Please see the *TPL0102 Register Map* for more details. When active, this feature causes terminal H to become high impedance.

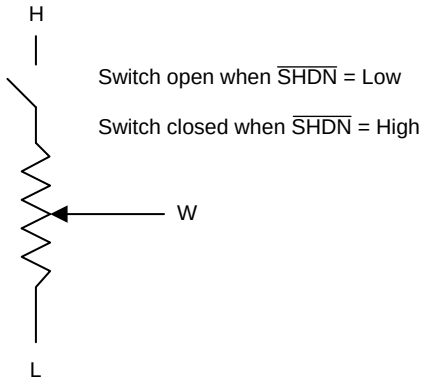

Figure 18. Equivalent Circuit for Shutdown Mode

7.4.2 Voltage Divider Mode

The digital potentiometer generates a voltage divider when all three terminals are used. The voltage divider at wiper-to-H and wiper-to-L is proportional to the input voltage at H to L.

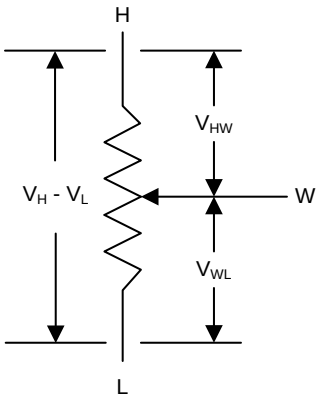

Figure 19. Equivalent Circuit for Voltage Divider Mode

For example, connecting terminal H to 5 V and terminal L to ground, the output voltage at terminal W can range from 0 V to 5 V. The general equation defining the output voltage at terminal W for any valid input voltage applied to terminal H and terminal L is

$$V_W = V_{WL} = (V_H - V_L) \times \frac{D}{256} \quad (1)$$

The voltage difference between terminal H and terminal W can also be calculated

$$V_{HW} = (V_H - V_L) \times \left(1 - \left(\frac{D}{256}\right)\right) \quad (2)$$

where

- D is the decimal value of the wiper code.

Device Functional Modes (continued)

7.4.3 Rheostat Mode

The TPL0102 operates in rheostat mode when only two terminals are used as a variable resistor. The variable resistance can either be between terminal H and terminal W or between terminal L and terminal W. The unused terminal can be left floating or it can be tied to terminal W. The nominal resistance between terminal H and terminal L is 100 kΩ and has 256 tap points accessed by the wiper terminal. The 8-bit volatile register value is used to determine one of the 256 possible wiper positions.

In rheostat mode, to set the resistance between terminal H and terminal W, the potentiometer can be configured in two possible ways.

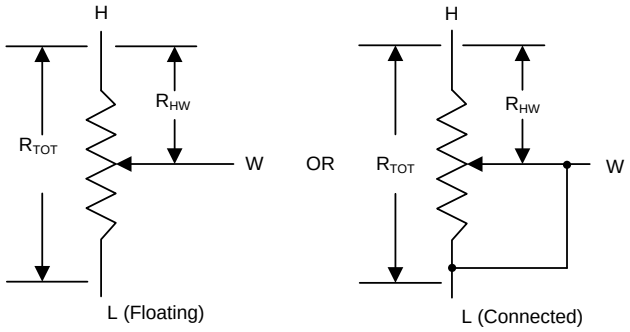

Figure 20. Equivalent Circuit for Rheostat Mode with Terminal H to Terminal W Resistance

The general equation for determining the digitally programmed output resistance between Terminal H and Terminal W is:

$$R_{HW} = R_{TOT} \times \left(1 - \left(\frac{D}{256}\right)\right) \quad (3)$$

where

- R_{TOT} is the end-to-end resistance between terminal H and terminal L.
- D is the decimal value of the wiper code.

Similarly, to set the resistance between terminal L and terminal W, the potentiometer can be configured in two possible ways.

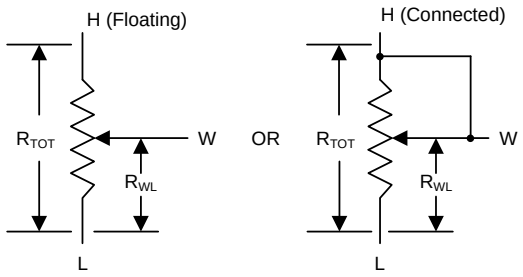

Figure 21. Equivalent Circuit for Rheostat Mode with Terminal L to Terminal W Resistance

The general equation for determining the digitally programmed output resistance between terminal L and terminal W is

$$R_{WL} = R_{TOT} \times \frac{D}{256} \quad (4)$$

where

- R_{TOT} is the end-to-end resistance between terminal H and terminal L.
- D is the decimal value of the wiper code.

Copyright © 2011–2015, Texas Instruments Incorporated

Device Functional Modes (continued)

The following table shows the ideal values for DPOT with End-to End resistance of 100 kΩ. The absolute values of resistance can vary significantly but the Ratio (R_{WL}/R_{HW}) is extremely accurate.

The linearity values are "relative" linearity values (i.e. linearity after zero-scale and full-scale offset errors are removed). Please take this into account when expecting a certain absolute accuracy since some error will be introduced once you get close in magnitude to the offset errors.

Step	Hex	Binary	R_{WL} (kΩ)	R_{HW} (kΩ)	R_{WL}/R_{HW}
0 (zero-scale)	0x00h	0000 0000	0.00	100.00	0.00
1	0x01h	0000 0001	0.39	99.61	0.00
2	0x02h	0000 0010	0.78	99.22	0.01
3	0x03h	0000 0011	1.17	98.83	0.01
4	0x04h	0000 0100	1.56	98.44	0.02
5	0x05h	0000 0101	1.95	98.05	0.02
6	0x06h	0000 0110	2.34	97.66	0.02
7	0x07h	0000 0111	2.73	97.27	0.03
8	0x08h	0000 1000	3.13	96.88	0.03
9	0x09h	0000 1001	3.52	96.48	0.04
10	0x0Ah	0000 1010	3.91	96.09	0.04
11	0x0Bh	0000 1011	4.30	95.70	0.04
12	0x0Ch	0000 1100	4.69	95.31	0.05
13	0x0Dh	0000 1101	5.08	94.92	0.05
14	0x0Eh	0000 1110	5.47	94.53	0.06
15	0x0Fh	0000 1111	5.86	94.14	0.06
16	0x10h	0001 0000	6.25	93.75	0.07
17	0x11h	0001 0001	6.64	93.36	0.07
18	0x12h	0001 0010	7.03	92.97	0.08
19	0x13h	0001 0011	7.42	92.58	0.08
20	0x14h	0001 0100	7.81	92.19	0.08
21	0x15h	0001 0101	8.20	91.80	0.09
22	0x16h	0001 0110	8.59	91.41	0.09
23	0x17h	0001 0111	8.98	91.02	0.10
24	0x18h	0001 1000	9.38	90.63	0.10
25	0x19h	0001 1001	9.77	90.23	0.11
26	0x1Ah	0001 1010	10.16	89.84	0.11
27	0x1Bh	0001 1011	10.55	89.45	0.12
28	0x1Ch	0001 1100	10.94	89.06	0.12
29	0x1Dh	0001 1101	11.33	88.67	0.13
30	0x1Eh	0001 1110	11.72	88.28	0.13
31	0x1Fh	0001 1111	12.11	87.89	0.14
32	0x20h	0010 0000	12.50	87.50	0.14
33	0x21h	0010 0001	12.89	87.11	0.15
34	0x22h	0010 0010	13.28	86.72	0.15
35	0x23h	0010 0011	13.67	86.33	0.16
36	0x24h	0010 0100	14.06	85.94	0.16
37	0x25h	0010 0101	14.45	85.55	0.17
38	0x26h	0010 0110	14.84	85.16	0.17
39	0x27h	0010 0111	15.23	84.77	0.18
40	0x28h	0010 1000	15.63	84.38	0.19
41	0x29h	0010 1001	16.02	83.98	0.19

Copyright © 2011–2015, Texas Instruments Incorporated

Step	Hex	Binary	R_{WL} (kΩ)	R_{HW} (kΩ)	R_{WL}/R_{HW}
42	0x2Ah	0010 1010	16.41	83.59	0.20
43	0x2Bh	0010 1011	16.80	83.20	0.20
44	0x2Ch	0010 1100	17.19	82.81	0.21
45	0x2Dh	0010 1101	17.58	82.42	0.21
46	0x2Eh	0010 1110	17.97	82.03	0.22
47	0x2Fh	0010 1111	18.36	81.64	0.22
48	0x30h	0011 0000	18.75	81.25	0.23
49	0x31h	0011 0001	19.14	80.86	0.24
50	0x32h	0011 0010	19.53	80.47	0.24
51	0x33h	0011 0011	19.92	80.08	0.25
52	0x34h	0011 0100	20.31	79.69	0.25
53	0x35h	0011 0101	20.70	79.30	0.26
54	0x36h	0011 0110	21.09	78.91	0.27
55	0x37h	0011 0111	21.48	78.52	0.27
56	0x38h	0011 1000	21.88	78.13	0.28
57	0x39h	0011 1001	22.27	77.73	0.29
58	0x3Ah	0011 1010	22.66	77.34	0.29
59	0x3Bh	0011 1011	23.05	76.95	0.30
60	0x3Ch	0011 1100	23.44	76.56	0.31
61	0x3Dh	0011 1101	23.83	76.17	0.31
62	0x3Eh	0011 1110	24.22	75.78	0.32
63	0x3Fh	0011 1111	24.61	75.39	0.33
64	0x40h	0100 0000	25.00	75.00	0.33
65	0x41h	0100 0001	25.39	74.61	0.34
66	0x42h	0100 0010	25.78	74.22	0.35
67	0x43h	0100 0011	26.17	73.83	0.35
68	0x44h	0100 0100	26.56	73.44	0.36
69	0x45h	0100 0101	26.95	73.05	0.37
70	0x46h	0100 0110	27.34	72.66	0.38
71	0x47h	0100 0111	27.73	72.27	0.38
72	0x48h	0100 1000	28.13	71.88	0.39
73	0x49h	0100 1001	28.52	71.48	0.40
74	0x4Ah	0100 1010	28.91	71.09	0.41
75	0x4Bh	0100 1011	29.30	70.70	0.41
76	0x4Ch	0100 1100	29.69	70.31	0.42
77	0x4Dh	0100 1101	30.08	69.92	0.43
78	0x4Eh	0100 1110	30.47	69.53	0.44
79	0x4Fh	0100 1111	30.86	69.14	0.45
80	0x50h	0101 0000	31.25	68.75	0.45
81	0x51h	0101 0001	31.64	68.36	0.46
82	0x52h	0101 0010	32.03	67.97	0.47
83	0x53h	0101 0011	32.42	67.58	0.48
84	0x54h	0101 0100	32.81	67.19	0.49
85	0x55h	0101 0101	33.20	66.80	0.50
86	0x56h	0101 0110	33.59	66.41	0.51
87	0x57h	0101 0111	33.98	66.02	0.51
88	0x58h	0101 1000	34.38	65.63	0.52
89	0x59h	0101 1001	34.77	65.23	0.53
90	0x5Ah	0101 1010	35.16	64.84	0.54

Copyright © 2011–2015, Texas Instruments Incorporated

Step	Hex	Binary	R_{WL} (kΩ)	R_{HW} (kΩ)	R_{WL}/R_{HW}
91	0x5Bh	0101 1011	35.55	64.45	0.55
92	0x5Ch	0101 1100	35.94	64.06	0.56
93	0x5Dh	0101 1101	36.33	63.67	0.57
94	0x5Eh	0101 1110	36.72	63.28	0.58
95	0x5Fh	0101 1111	37.11	62.89	0.59
96	0x60h	0110 0000	37.50	62.50	0.60
97	0x61h	0110 0001	37.89	62.11	0.61
98	0x62h	0110 0010	38.28	61.72	0.62
99	0x63h	0110 0011	38.67	61.33	0.63
100	0x64h	0110 0100	39.06	60.94	0.64
101	0x65h	0110 0101	39.45	60.55	0.65
102	0x66h	0110 0110	39.84	60.16	0.66
103	0x67h	0110 0111	40.23	59.77	0.67
104	0x68h	0110 1000	40.63	59.38	0.68
105	0x69h	0110 1001	41.02	58.98	0.70
106	0x6Ah	0110 1010	41.41	58.59	0.71
107	0x6Bh	0110 1011	41.80	58.20	0.72
108	0x6Ch	0110 1100	42.19	57.81	0.73
109	0x6Dh	0110 1101	42.58	57.42	0.74
110	0x6Eh	0110 1110	42.97	57.03	0.75
111	0x6Fh	0110 1111	43.36	56.64	0.77
112	0x70h	0111 0000	43.75	56.25	0.78
113	0x71h	0111 0001	44.14	55.86	0.79
114	0x72h	0111 0010	44.53	55.47	0.80
115	0x73h	0111 0011	44.92	55.08	0.82
116	0x74h	0111 0100	45.31	54.69	0.83
117	0x75h	0111 0101	45.70	54.30	0.84
118	0x76h	0111 0110	46.09	53.91	0.86
119	0x77h	0111 0111	46.48	53.52	0.87
120	0x78h	0111 1000	46.88	53.13	0.88
121	0x79h	0111 1001	47.27	52.73	0.90
122	0x7Ah	0111 1010	47.66	52.34	0.91
123	0x7Bh	0111 1011	48.05	51.95	0.92
124	0x7Ch	0111 1100	48.44	51.56	0.94
125	0x7Dh	0111 1101	48.83	51.17	0.95
126	0x7Eh	0111 1110	49.22	50.78	0.97
127	0x7Fh	0111 1111	49.61	50.39	0.98
128	0x80h	1000 0000	50.00	50.00	1.00
129	0x81h	1000 0001	50.39	49.61	1.02
130	0x82h	1000 0010	50.78	49.22	1.03
131	0x83h	1000 0011	51.17	48.83	1.05
132	0x84h	1000 0100	51.56	48.44	1.06
133	0x85h	1000 0101	51.95	48.05	1.08
134	0x86h	1000 0110	52.34	47.66	1.10
135	0x87h	1000 0111	52.73	47.27	1.12
136	0x88h	1000 1000	53.13	46.88	1.13
137	0x89h	1000 1001	53.52	46.48	1.15
138	0x8Ah	1000 1010	53.91	46.09	1.17
139	0x8Bh	1000 1011	54.30	45.70	1.19

Copyright © 2011–2015, Texas Instruments Incorporated

Step	Hex	Binary	R_{WL} (kΩ)	R_{HW} (kΩ)	R_{WL}/R_{HW}
140	0x8Ch	1000 1100	54.69	45.31	1.21
141	0x8Dh	1000 1101	55.08	44.92	1.23
142	0x8Eh	1000 1110	55.47	44.53	1.25
143	0x8Fh	1000 1111	55.86	44.14	1.27
144	0x90h	1001 0000	56.25	43.75	1.29
145	0x91h	1001 0001	56.64	43.36	1.31
146	0x92h	1001 0010	57.03	42.97	1.33
147	0x93h	1001 0011	57.42	42.58	1.35
148	0x94h	1001 0100	57.81	42.19	1.37
149	0x95h	1001 0101	58.20	41.80	1.39
150	0x96h	1001 0110	58.59	41.41	1.42
151	0x97h	1001 0111	58.98	41.02	1.44
152	0x98h	1001 1000	59.38	40.63	1.46
153	0x99h	1001 1001	59.77	40.23	1.49
154	0x9Ah	1001 1010	60.16	39.84	1.51
155	0x9Bh	1001 1011	60.55	39.45	1.53
156	0x9Ch	1001 1100	60.94	39.06	1.56
157	0x9Dh	1001 1101	61.33	38.67	1.59
158	0x9Eh	1001 1110	61.72	38.28	1.61
159	0x9Fh	1001 1111	62.11	37.89	1.64
160	0xA0h	1010 0000	62.50	37.50	1.67
161	0xA1h	1010 0001	62.89	37.11	1.69
162	0xA2h	1010 0010	63.28	36.72	1.72
163	0xA3h	1010 0011	63.67	36.33	1.75
164	0xA4h	1010 0100	64.06	35.94	1.78
165	0xA5h	1010 0101	64.45	35.55	1.81
166	0xA6h	1010 0110	64.84	35.16	1.84
167	0xA7h	1010 0111	65.23	34.77	1.88
168	0xA8h	1010 1000	65.63	34.38	1.91
169	0xA9h	1010 1001	66.02	33.98	1.94
170	0xAAh	1010 1010	66.41	33.59	1.98
171	0xABh	1010 1011	66.80	33.20	2.01
172	0xACh	1010 1100	67.19	32.81	2.05
173	0xADh	1010 1101	67.58	32.42	2.08
174	0xAEh	1010 1110	67.97	32.03	2.12
175	0xAFh	1010 1111	68.36	31.64	2.16
176	0xB0h	1011 0000	68.75	31.25	2.20
177	0xB1h	1011 0001	69.14	30.86	2.24
178	0xB2h	1011 0010	69.53	30.47	2.28
179	0xB3h	1011 0011	69.92	30.08	2.32
180	0xB4h	1011 0100	70.31	29.69	2.37
181	0xB5h	1011 0101	70.70	29.30	2.41
182	0xB6h	1011 0110	71.09	28.91	2.46
183	0xB7h	1011 0111	71.48	28.52	2.51
184	0xB8h	1011 1000	71.88	28.13	2.56
185	0xB9h	1011 1001	72.27	27.73	2.61
186	0xBAh	1011 1010	72.66	27.34	2.66
187	0xBBh	1011 1011	73.05	26.95	2.71
188	0xBCh	1011 1100	73.44	26.56	2.76

Copyright © 2011–2015, Texas Instruments Incorporated

Step	Hex	Binary	R_{WL} (kΩ)	R_{HW} (kΩ)	R_{WL}/R_{HW}
189	0xBDh	1011 1101	73.83	26.17	2.82
190	0xBEh	1011 1110	74.22	25.78	2.88
191	0xBFh	1011 1111	74.61	25.39	2.94
192	0xC0h	1100 0000	75.00	25.00	3.00
193	0xC1h	1100 0001	75.39	24.61	3.06
194	0xC2h	1100 0010	75.78	24.22	3.13
195	0xC3h	1100 0011	76.17	23.83	3.20
196	0xC4h	1100 0100	76.56	23.44	3.27
197	0xC5h	1100 0101	76.95	23.05	3.34
198	0xC6h	1100 0110	77.34	22.66	3.41
199	0xC7h	1100 0111	77.73	22.27	3.49
200	0xC8h	1100 1000	78.13	21.88	3.57
201	0xC9h	1100 1001	78.52	21.48	3.65
202	0xCAh	1100 1010	78.91	21.09	3.74
203	0xCBh	1100 1011	79.30	20.70	3.83
204	0xCCh	1100 1100	79.69	20.31	3.92
205	0xCDh	1100 1101	80.08	19.92	4.02
206	0xCEh	1100 1110	80.47	19.53	4.12
207	0xCFh	1100 1111	80.86	19.14	4.22
208	0xD0h	1101 0000	81.25	18.75	4.33
209	0xD1h	1101 0001	81.64	18.36	4.45
210	0xD2h	1101 0010	82.03	17.97	4.57
211	0xD3h	1101 0011	82.42	17.58	4.69
212	0xD4h	1101 0100	82.81	17.19	4.82
213	0xD5h	1101 0101	83.20	16.80	4.95
214	0xD6h	1101 0110	83.59	16.41	5.10
215	0xD7h	1101 0111	83.98	16.02	5.24
216	0xD8h	1101 1000	84.38	15.63	5.40
217	0xD9h	1101 1001	84.77	15.23	5.56
218	0xDAh	1101 1010	85.16	14.84	5.74
219	0xDBh	1101 1011	85.55	14.45	5.92
220	0xDCh	1101 1100	85.94	14.06	6.11
221	0xDDh	1101 1101	86.33	13.67	6.31
222	0xDEh	1101 1110	86.72	13.28	6.53
223	0xDFh	1101 1111	87.11	12.89	6.76
224	0xE0h	1110 0000	87.50	12.50	7.00
225	0xE1h	1110 0001	87.89	12.11	7.26
226	0xE2h	1110 0010	88.28	11.72	7.53
227	0xE3h	1110 0011	88.67	11.33	7.83
228	0xE4h	1110 0100	89.06	10.94	8.14
229	0xE5h	1110 0101	89.45	10.55	8.48
230	0xE6h	1110 0110	89.84	10.16	8.85
231	0xE7h	1110 0111	90.23	9.77	9.24
232	0xE8h	1110 1000	90.63	9.38	9.67
233	0xE9h	1110 1001	91.02	8.98	10.13
234	0xEAh	1110 1010	91.41	8.59	10.64
235	0xEBh	1110 1011	91.80	8.20	11.19
236	0xECh	1110 1100	92.19	7.81	11.80
237	0xEDh	1110 1101	92.58	7.42	12.47

Copyright © 2011–2015, Texas Instruments Incorporated

Step	Hex	Binary	R_{WL} (kΩ)	R_{HW} (kΩ)	R_{WL}/R_{HW}
238	0xEEh	1110 1110	92.97	7.03	13.22
239	0xEFh	1110 1111	93.36	6.64	14.06
240	0xF0h	1111 0000	93.75	6.25	15.00
241	0xF1h	1111 0001	94.14	5.86	16.07
242	0xF2h	1111 0010	94.53	5.47	17.29
243	0xF3h	1111 0011	94.92	5.08	18.69
244	0xF4h	1111 0100	95.31	4.69	20.33
245	0xF5h	1111 0101	95.70	4.30	22.27
246	0xF6h	1111 0110	96.09	3.91	24.60
247	0xF7h	1111 0111	96.48	3.52	27.44
248	0xF8h	1111 1000	96.88	3.13	31.00
249	0xF9h	1111 1001	97.27	2.73	35.57
250	0xFAh	1111 1010	97.66	2.34	41.67
251	0xFBh	1111 1011	98.05	1.95	50.20
252	0xFCh	1111 1100	98.44	1.56	63.00
253	0xFDh	1111 1101	98.83	1.17	84.33
254	0xFEh	1111 1110	99.22	0.78	127.00
255 (full-scale)	0xFFh	1111 1111	99.61	0.3	255.00

7.5 Programming with I^2C

7.5.1 I^2C General Operation

7.5.1.1 I^2C Interface

The TPL0102 has a standard bidirectional I^2C interface that is controlled by a microcontroller in order to configure the device and read the status of the device. Each device on the I^2C bus, including this device, has a specific device address to differentiate between other devices that may be on the I^2C bus. Configuration of the device is performed when the microcontroller addresses the device, then accesses the device's internal Register Maps, which have unique register addresses. The TPL0102 has multiple registers where data is stored, written, or read. Please refer to the Register Map for more details.

The physical I^2C interface consists of the serial clock (SCL) and serial data (SDA) lines. Both SDA and SCL lines must be connected to VDD through a pull-up resistor. The size of the pull-up resistor is determined by the amount of capacitance on the I^2C lines (for further details, please refer to the *I^2C Bus Pullup Resistor Calculation* Application Report). Data transfer may be initiated only when the bus is not busy. For more detailed information on I^2C, please refer to the *Understanding the I^2C Bus* Application Report.

1. Suppose a master wants to send information to the TPL0102:
- Master addresses TPL0102 (slave)
- Master-transmitter sends data to TPL0102 (slave-receiver)
- Master terminates the transfer.

2. If a master wants to receive information from TPL0102:
- Master addresses TPL0102 (slave)
- Master-receiver receives data from TPL0102 (slave-transmitter)
- Master terminates the transfer.

The master generates the timing for the SCL.

7.5.1.2 START and STOP Conditions

I^2C communication with this device is initiated by the master sending a START condition and terminated by the master sending a STOP condition. A high-to-low transition on the SDA line while the SCL is high defines a START condition. A low-to-high transition on the SDA line while the SCL is high defines a STOP condition.

Copyright © 2011–2015, Texas Instruments Incorporated

Programming with I²C (continued)

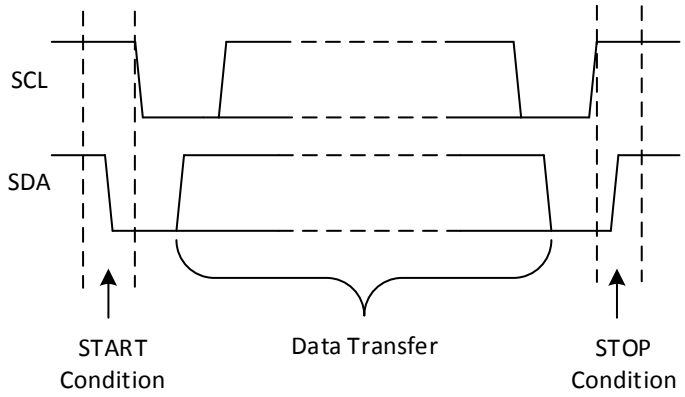

Figure 22. Definition of START and STOP Conditions

7.5.1.3 Data Validity and Byte Formation

One data bit is transferred during each clock pulse of the SCL. One byte is comprised of eight bits on the SDA line. A byte may either be a device address, register address, or data written to or read from a slave.

Data is transferred Most Significant Bit (MSB) first. Any number of data bytes can be transferred from the master to slave between the START and STOP conditions. Data on the SDA line must remain stable during the high phase of the clock period, as changes in the data line when the SCL is high are interpreted as control commands (START or STOP).

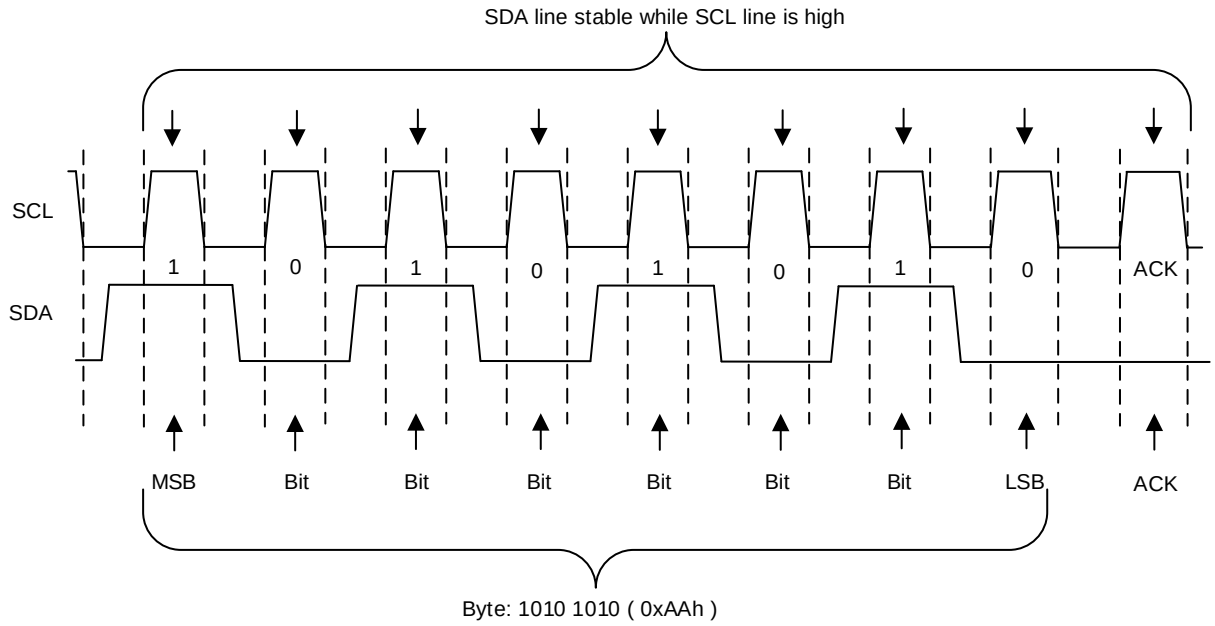

Figure 23. Definition of Byte Formation

7.5.1.4 Acknowledge (ACK) and Not Acknowledge (NACK)

Each byte is followed by one ACK bit from the receiver. The ACK bit allows the receiver to communicate to the transmitter that the byte was successfully received and another byte may be sent.

The transmitter must release the SDA line before the receiver can send the ACK bit. To send an ACK bit, the receiver shall pull down the SDA line during the low phase of the ACK/NACK-related clock period (period 9), so that the SDA line is stable low during the high phase of the ACK/NACK-related clock period. Setup and hold times must be taken into account.

Copyright © 2011–2015, Texas Instruments Incorporated

Programming with I²C (continued)

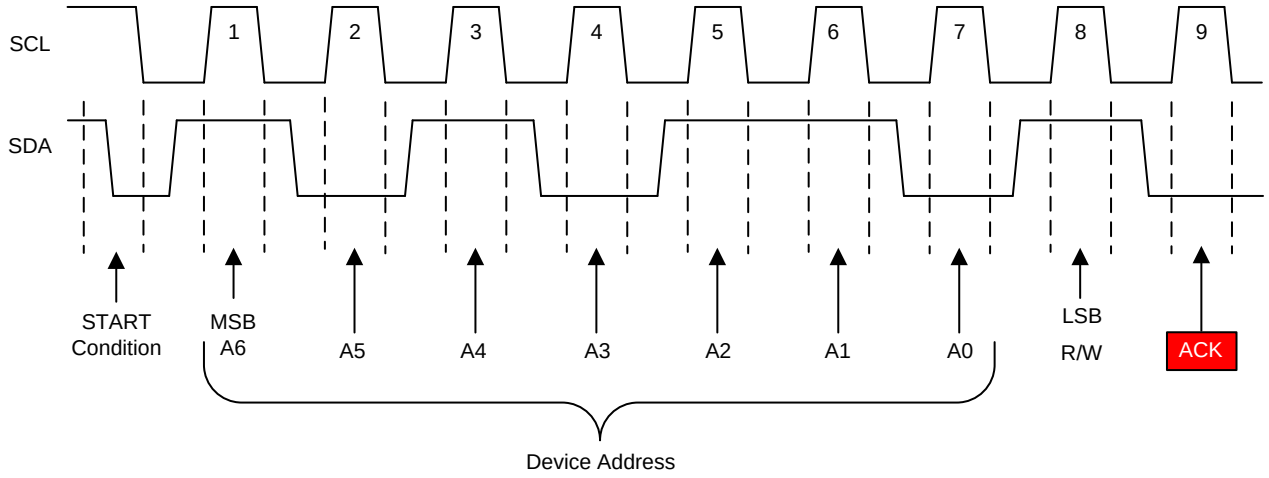

Figure 24. Example use of ACK

When the SDA line remains high during the ACK/NACK-related clock period, this is a NACK signal. There are several conditions that lead to the generation of a NACK:

- The receiver is unable to receive or transmit because it is performing some real-time function and is not ready to start communication with the master.
- During the transfer, the receiver gets data or commands that it does not understand.
- During the transfer, the receiver cannot receive any more data bytes.
- A master-receiver is done reading data and indicates this to the slave through a NACK.

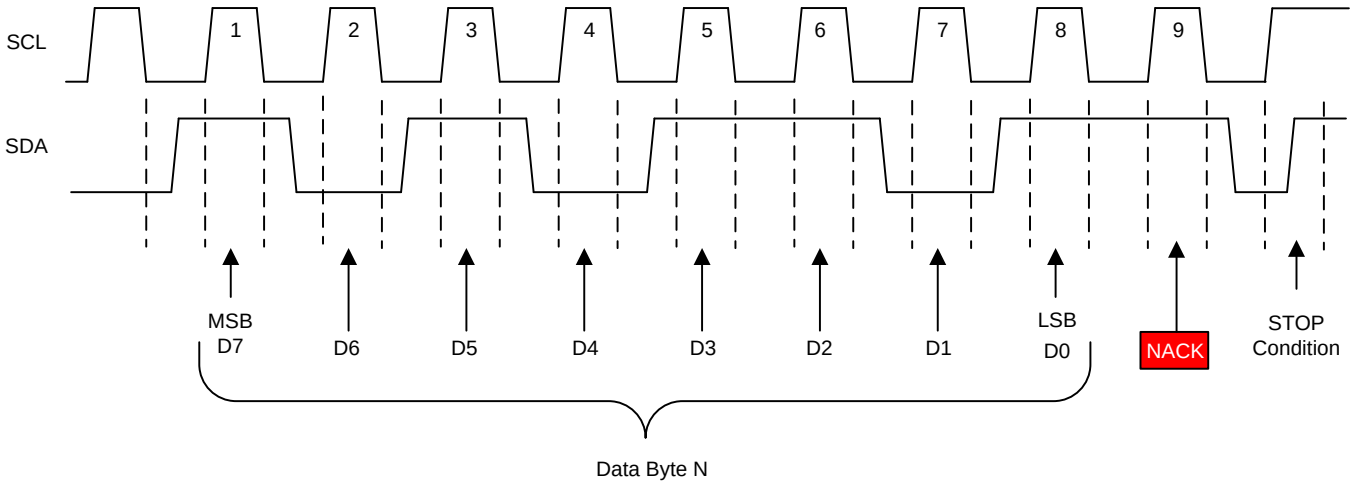

Figure 25. Example use of NACK

7.5.2 I²C Write and Read Operation

7.5.2.1 Auto Increment Function

Auto increment allows multiple bytes to be written to or read from consecutive registers without requiring the master to repeatedly send the device address and register address for each data byte. This is beneficial because auto increment substantially reduces the number of bytes transferred between the master and slave.

For the TPL0102, the registers will auto increment as long as the user continues to enter data. Auto increment will stop once the user is finished entering data bytes.

Copyright © 2011–2015, Texas Instruments Incorporated

Programming with I²C (continued)

If there are more bytes to write or read after the last register address is written to or read from in the register map, auto increment will loop around to the register address at the beginning of the register map. For example, after the ACR (register address 0x10h) has been written to, if there are more bytes to be written, the register address will loop to the IVRA (register address 0x00h) at the beginning of the register map.

7.5.2.2 Write Operation

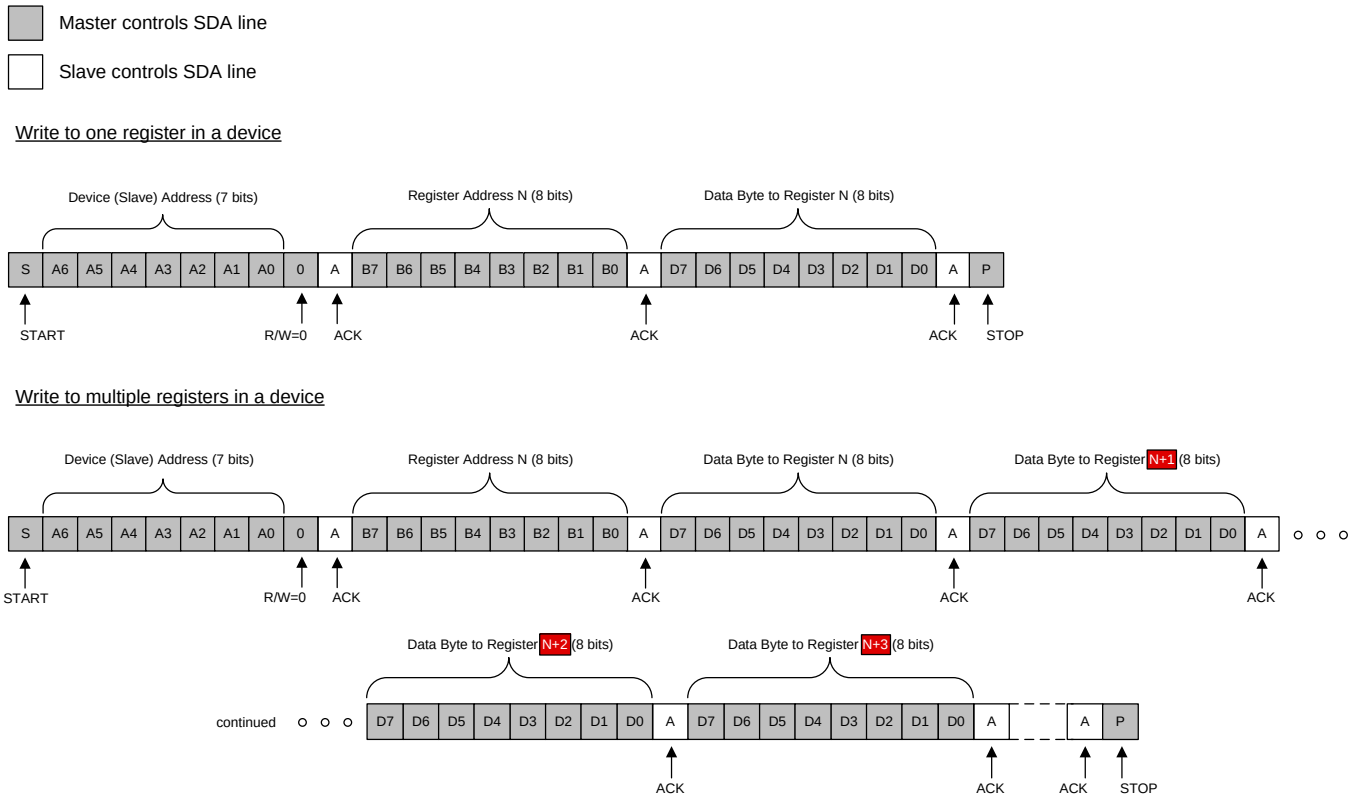

Figure 26. Write Operation to One or Multiple Registers

7.5.2.3 Repeated Start

A repeated START condition may be used in place of a complete STOP condition follow by another START condition when performing a read function. The advantage of this is that the I²C bus does not become available after the stop and therefore prevents other devices from grabbing the bus between transfers.

Programming with I²C (continued)

7.5.2.4 Read Operation

Master controls SDA line

Slave controls SDA line

Read from one register in a device

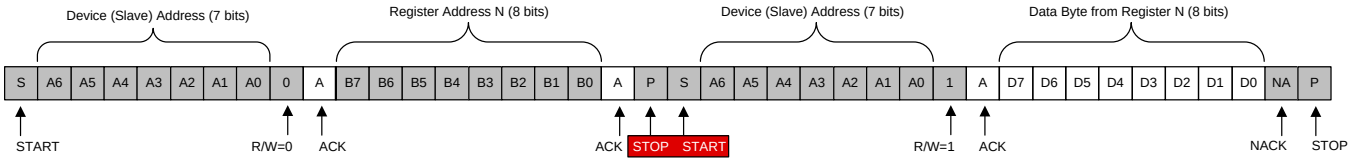

Read from one register in a device (Repeated Start)

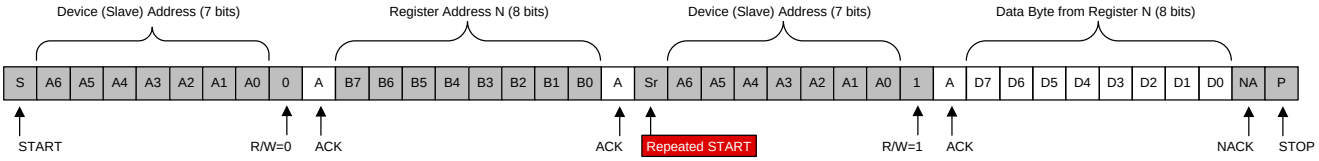

Figure 27. Read Operation from One Register

Read from multiple registers in a device

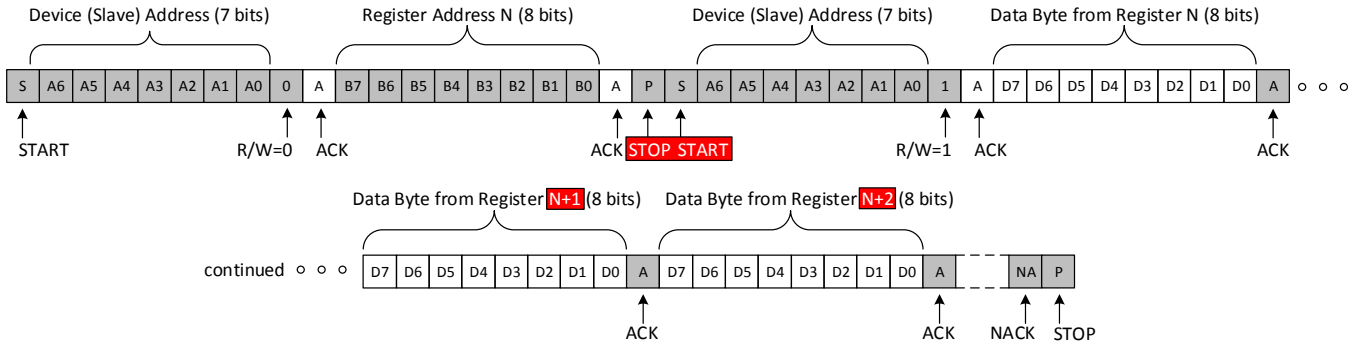

Read from multiple registers in a device (Repeated Start)

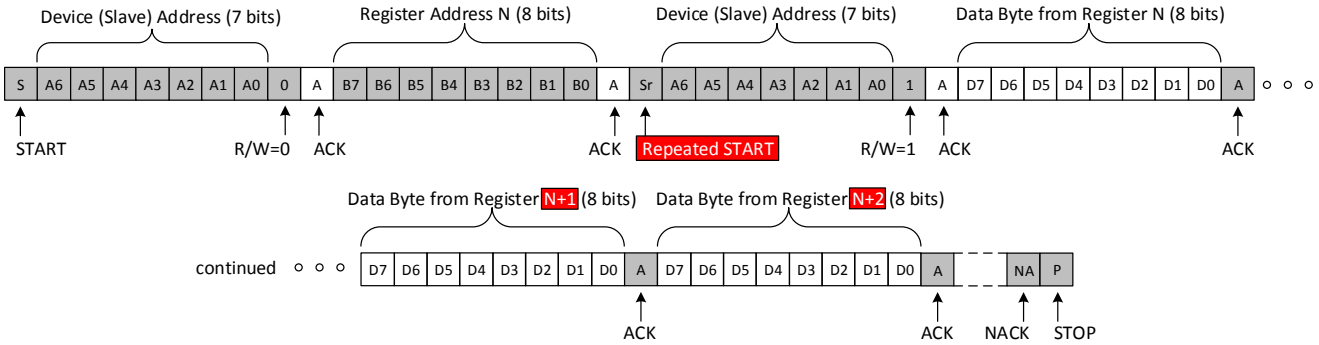

Figure 28. Read Operation from Multiple Registers

Copyright © 2011–2015, Texas Instruments Incorporated

7.6 Register Maps

7.6.1 Slave Address

The device (slave) address can be configured by the user with 3 bits (A2, A1, and A0), allowing for 8 different possibilities for the device address. Please see the Figure 30 for an example.

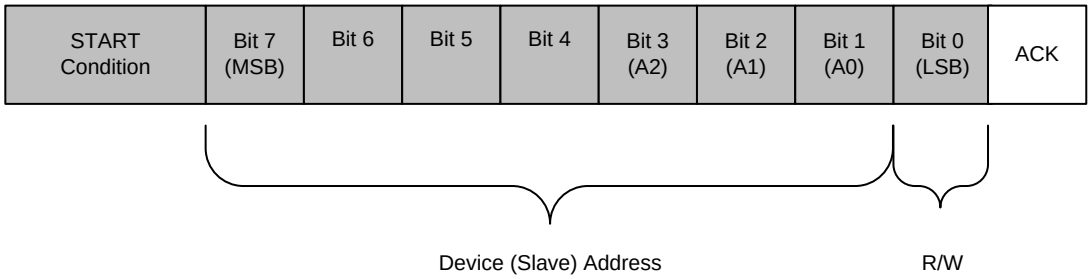

Figure 29. Device Address in Context with START and ACK

Bit 7 (MSB)	Bit 6	Bit 5	Bit 4	Bit 3	Bit 2	Bit 1	Bit 0 (LSB)
1	0	1	0	A2	A1	A0	R/W

Figure 30 shows an example of how to configure A2, A1 and A0 to give unique device addresses on the same I^2C bus. When a bit is wired to Vcc, this gives that bit a value of 1. When a bit is wired to GND, this gives that bit a value of 0.

For example, Device 1 could be the TPL0102 on the I^2C bus, which would have a 7 bit device address of 1010 110. There are some interfaces that will require the device address to be inputted in hex. In order to make the device address 8 bits for hex notation, a leading 0 is added to the left of the 7 bit device address. For Device 1, the 8 bit device address is 0101 0110 (0x56h). Device 2 would have a 7 bit device address of 1010 100, which with a leading 0 results in an 8 bit device address of 0101 0100 (0x54h). Device 3 would have a 7 bit device address of 1010 011, and with a leading 0 results in an 8 bit device address of 0101 0011 (0x53h).

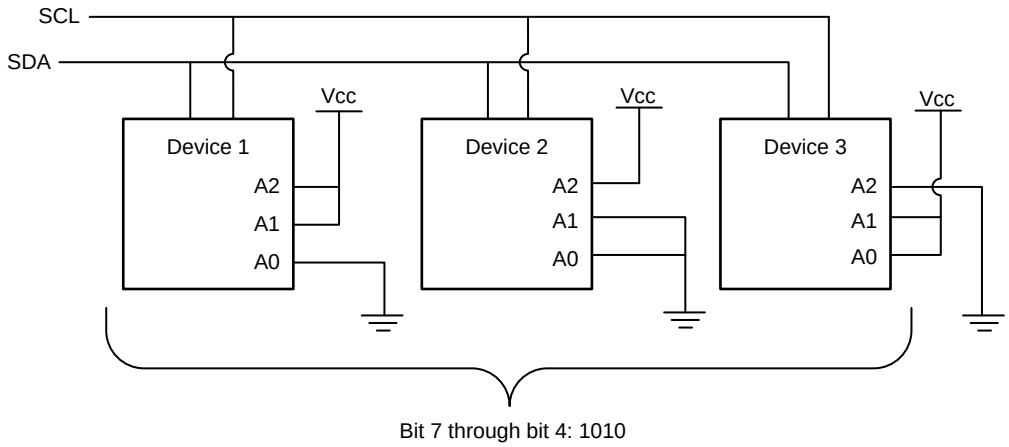

Figure 30. Examples of Device Address Configuration on I^2C Bus

7.6.2 TPL0102 Register Map

- When writing the entire register map using auto increment, general purpose registers in the register address map need to be written with dummy bytes. The general purpose registers do not effect the outputs of the potentiometers.
- As stated in the *Overview*, the VOL bit from the *ACR (Access Control Register)* provides two options for register accessibility. Either only volatile registers (WR) are accessible to change the wiper setting without storing the value in non-volatile memory or volatile registers (WR) and non-volatile registers (IVR) are accessible to change the wiper setting, which allows the value to be stored in non-volatile memory.
- The respective non-volatile and volatile registers have the same register address, thus to write to both the volatile and non-volatile locations, only one register address needs to be entered and the VOL bit needs to be configured properly.

REGISTER ADDRESS (HEX)	REGISTER ADDRESS (BINARY)	NON-VOLATILE	VOLATILE
0x00h	0000 0000	IVRA	WRA
0x01h	0000 0001	IVRB	WRB
0x02h	0000 0010	General purpose	N/A
0x03h	0000 0011	General purpose	N/A
0x04h	0000 0100	General purpose	N/A
0x05h	0000 0101	General purpose	N/A
0x06h	0000 0110	General purpose	N/A
0x07h	0000 0111	General purpose	N/A
0x08h	0000 1000	General purpose	N/A
0x09h	0000 1001	General purpose	N/A
0x0Ah	0000 1010	General purpose	N/A
0x0Bh	0000 1011	General purpose	N/A
0x0Ch	0000 1100	General purpose	N/A
0x0Dh	0000 1101	General purpose	N/A
0x0Eh	0000 1110	General purpose	N/A
0x0Fh	0000 1111		Reserved
0x10h	0001 0000	N/A	ACR

7.6.3 IVRA (Initial Value Register for Potentiometer A)

- Non-volatile register to store wiper position for potentiometer A
- Register will hold value even when device is powered down

NAME	TYPE	SIZE (BITS)	REGISTER ADDRESS	FACTORY PROGRAMMED VALUE
IVRA	Non-volatile Write/Read	8	0x00h	0x80h

7.6.4 WRA (Wiper Resistance Register for Potentiometer A)

- Volatile register to change wiper position for potentiometer A
- IVRA loads value to WRA to determine wiper position

NAME	TYPE	SIZE (BITS)	REGISTER ADDRESS	VALUE UPON RESET
WRA	Volatile Write/Read	8	0x00h	IVRA value

Copyright © 2011–2015, Texas Instruments Incorporated

7.6.5 IVRB (Initial Value Register for Potentiometer B)

- Non-volatile register to store wiper position for potentiometer B
- Register will hold value even when device is powered down

NAME	TYPE	SIZE (BITS)	REGISTER ADDRESS	FACTORY PROGRAMMED VALUE
IVRB	Non-volatile Write/Read	8	0x01h	0x80h

7.6.6 WRB (Wiper Resistance Register for Potentiometer B)

- Volatile register to change wiper position for potentiometer B
- IVRB loads value to WRB to determine wiper position

NAME	TYPE	SIZE (BITS)	REGISTER ADDRESS	VALUE UPON RESET
WRB	Volatile Write/Read	8	0x01h	IVRB value

7.6.7 ACR (Access Control Register)

- Volatile register to control register access, determine shut-down mode, and read non-volatile write operations

NAME	TYPE	SIZE (BITS)	REGISTER ADDRESS	VALUE UPON RESET
ACR	Volatile Write/Read	8	0x10h	0x40h

NAME	BIT ASSIGNMENT							
ACR	Bit 7	Bit 6	Bit 5	Bit 4	Bit 3	Bit 2	Bit 1	Bit 0
	VOL	$\overline{\text{SHDN}}$	WIP	0	0	0	0	0
Reset (Default) Value	0	1	0	0	0	0	0	0

NAME	TYPE	SIZE (BITS)	BIT VALUE	DESCRIPTION
VOL	Volatile Write/Read	1	0	Non-volatile registers (IVRA, IVRB) are accessible. Value written to IVR register is also written to the corresponding WR. If read operation is performed, only non-volatile register (IVRA, IVRB) values will be reported.
			1	Only Volatile Registers (WR) are accessible. If read operation is performed, only volatile (WRA, WRB) values will be reported.
$\overline{\text{SHDN}}$	Volatile Write/Read	1	0	Shutdown mode is enabled. Both potentiometers are in shutdown mode. (see Shutdown Mode)
			1	Shutdown mode is disabled
WIP	Volatile Read	1	0	Non-volatile write operation is not in progress
			1	Non-volatile write operation is in progress (it is not possible to write to the WR or ACR while WIP = 1)

Copyright © 2011–2015, Texas Instruments Incorporated

8 Application and Implementation

NOTE

Information in the following applications sections is not part of the TI component specification, and TI does not warrant its accuracy or completeness. TI's customers are responsible for determining suitability of components for their purposes. Customers should validate and test their design implementation to confirm system functionality.

8.1 Application Information

There are many applications in which variable resistance or voltage division is needed through the use of a digital potentiometer such as the TPL0102; these are just a few examples. In conjunction with various amplifiers, the TPL0102 can effectively be used in rheostat mode to modify the gain of an amplifier, in voltage divider mode to create a Digital to Analog Converter, or one of the potentiometers can be used in voltage divider mode while the other is in rheostat mode to create a variable current sink.

8.2 Typical Applications

8.2.1 Adjustable Gain Non-Inverting Amplifier

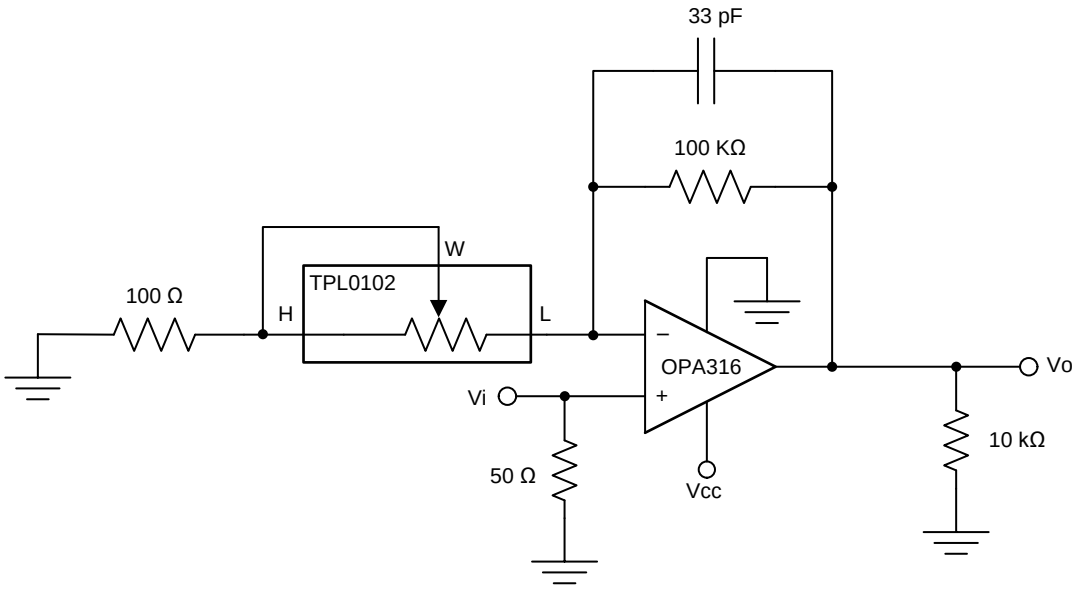

Figure 31. Gain Control Compensation Schematic

8.2.1.1 Design Requirements

DESIGN PARAMETER	EXAMPLE VALUE
Gain range	6 to 60 dB

8.2.1.2 Detailed Design Procedure

The TPL0102 can be used in rheostat mode with an OPA316 to create an adjustable gain non-inverting amplifier. The capacitor and resistor values were chosen based upon the Non-Inverting Amplifier Gain equation:

$$\text{Gain} = 1 + \frac{Z_f}{Z_{in}} \quad (5)$$

Where Z_{in} is the impedance between the inverting input and GND and Z_f is the impedance of the feedback network.

Copyright © 2011–2015, Texas Instruments Incorporated

In this application, the following equations are used:

$$Z_{in} = \text{TPL0102 resistance} + 100\ \Omega \tag{6}$$

and

$$Z_f = R_f \,||\, C_f \tag{7}$$

Where R_f and C_f are the feedback resistor and capacitor, respectively.

A 100 Ω resistor is added in series with the TPL0102 resistance in order to stop the op amp from producing infinite gain. When the TPL0102 is at zero-scale, the resistance between terminal L and terminal W is ~0 Ω. This would normally cause infinite gain, but with the 100 Ω resistor is series, the lowest Z_{in} can be is 100 Ω, which at DC will create a gain of roughly 60 dB.

$$\text{Gain} = 1 + \frac{100\ \text{k}\Omega}{\sim 0\ \Omega + 100\ \Omega} = 1 + \frac{100\ \text{k}\Omega}{100\ \Omega} = 1 + 1000 = 1001\ \frac{\text{V}}{\text{V}} \cong 60\ \text{dB} \tag{8}$$

R_f and C_f were chosen based upon characteristics of the potentiometer and op amp, respectively. The value of R_f affects the level of gain, primarily at low frequencies. Since the TPL0102 has a full-scale resistance of 100 kΩ between terminal W and terminal L, the Rf was chosen to match this full-scale resistance, which produces the minimum gain of 6 dB:

$$\text{Gain} = 1 + \frac{100\ \text{k}\Omega}{100\ \text{k}\Omega + 100\ \Omega} \cong 1 + \frac{100\ \text{k}\Omega}{100\ \text{k}\Omega} = 1 + 1 = 2\ \frac{\text{V}}{\text{V}} \cong 6\ \text{dB} \tag{9}$$

As frequency increases, C_f begins to have an impact on gain. A frequency roll-off will occur due to the open-loop gain of the op amp, but in this application, the desired effect is to have C_f impact the roll off before the open loop gain of the op amp. At a gain of 40 dB, the op amp open loop gain will force the roll off to occur at 100 kHz. Therefore, in order for C_f to impact the roll off before the open loop gain, roll off due to the capacitor must occur at less than 100 kHz. In this application, 50 kHz is the desired roll off frequency, resulting in a C_f value of 33 pF.

$$C_f = \frac{1}{2 \times \pi \times R_f \times f(-3\ \text{dB})} = \frac{1}{2 \times \pi \times 100\ \text{k}\Omega \times 50\ \text{kHz}} = 33\ \text{pF} \tag{10}$$

Measurements were taken with a 10 kΩ load. A 50 Ω resistor is included at the input for termination of measurement equipment.

8.2.1.3 Application Curves

As the TPL0102 moves from full-scale to zero-scale, Z_{in} decreases, which causes the gain of the op amp to increase from 6 dB to 56 dB. The amplifier does not reach the full 60 dB of calculated gain because the resistance in the TPL0102 did not reach 0 Ω. At zero-scale, the TPL0102 had a remaining resistance of approximately 58 Ω.

$$\text{Gain} = 1 + \frac{100\ \text{k}\Omega}{58\ \Omega + 100\ \Omega} = 1 + \frac{100\ \text{k}\Omega}{158\ \Omega} = 1 + 633 = 634\ \frac{\text{V}}{\text{V}} \cong 56\ \text{dB} \tag{11}$$

The application curve clearly shows the effect of the low pass filter created by the R_f and C_f combination. Roll off begins as frequencies approach 50 kHz because of the pole created by the 33 pF capacitor. As the frequency increases beyond 50 kHz, the gain decreases by -20 dB/dec until the gain levels off at 1V/V or 0dB. The gain levels off due to the nature of non-inverting op amp transfer functions. The feedback impedance, Z_f, is approximately zero at high frequency because C_f acts as a short. As shown below, this results in a gain of 0 dB:

$$\text{Gain} = 1 + \frac{Z_f}{Z_{in}} = 1 + \frac{\sim 0}{Z_{in}} = 1\ \frac{\text{V}}{\text{V}} = 0\ \text{dB} \tag{12}$$

At approximately 3 MHz, the gain is again reduced by –20 dB/dec due to the pole created by open-loop gain of the OPA316.

Copyright © 2011–2015, Texas Instruments Incorporated

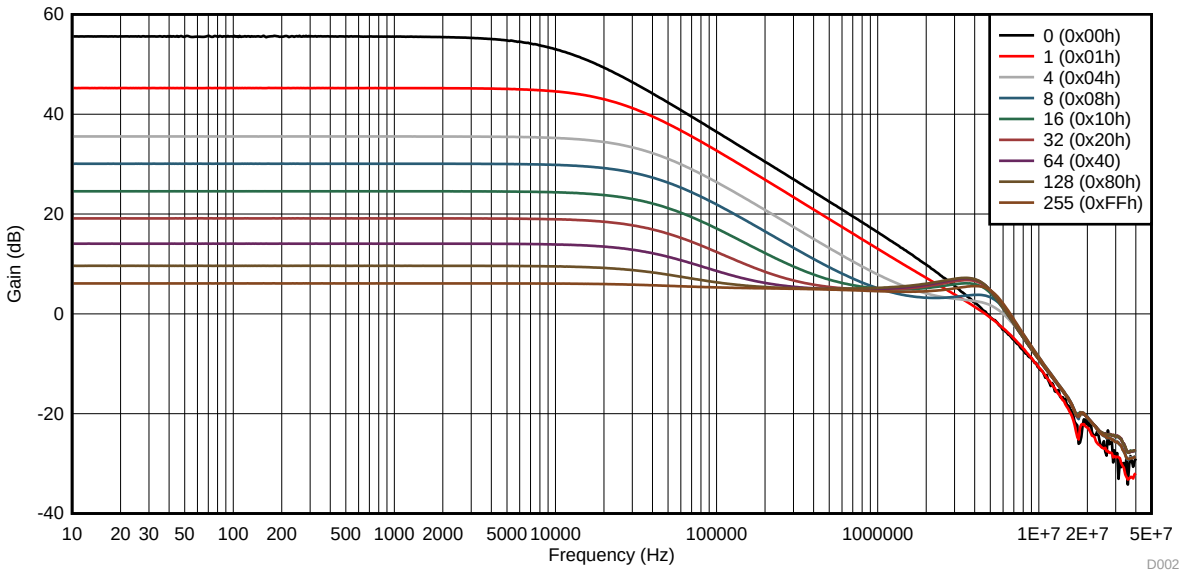

Figure 32. Gain vs Frequency

8.2.2 Digital to Analog Converter (DAC)

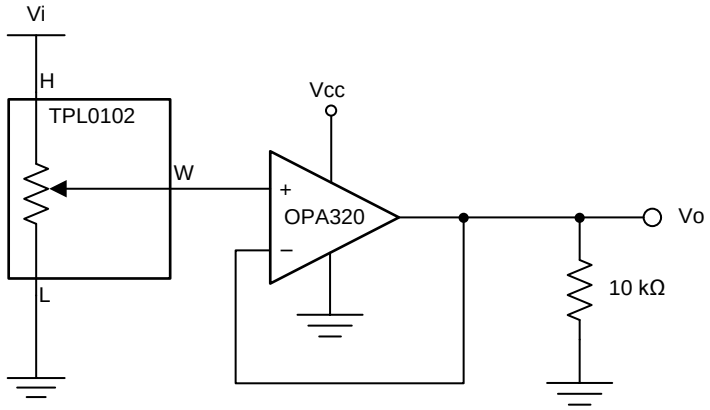

Figure 33. Digital to Analog Converter Schematic

8.2.2.1 Design Requirements

DESIGN PARAMETER	EXAMPLE VALUE
Input Voltage Range	0 to 5 V
Output Voltage Range	0 to 5 V

8.2.2.2 Detailed Design Procedure

The TPL0102 can be used in voltage divider mode with a unity-gain op amp buffer to create an 8-bit Digital to Analog Converter (DAC). The analog output voltage of the circuit is determined by the wiper setting programmed through the I^2C bus.

The op amp is required to buffer the high-impedance output of the TPL0102 or else loading placed on the output of the voltage divider will affect the output voltage.

Copyright © 2011–2015, Texas Instruments Incorporated

8.2.2.3 Application Curves

The voltage at terminal H determines the maximum analog voltage at the output. As the TPL0102 moves from zero-scale to full-scale, the voltage divider adjusts with relation to the voltage divider formula (Equation 1), resulting in the desired voltage at terminal W. The voltage at terminal W will range linearly from 0 V to the terminal H voltage. In this example, Vin at terminal H is 5 V and 2.7 V.

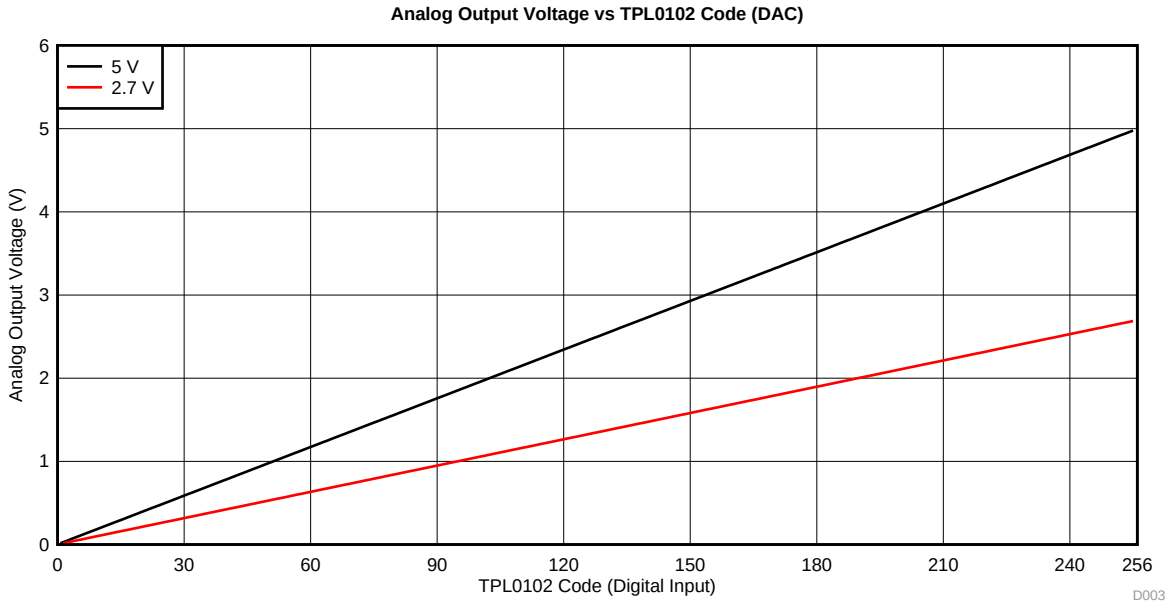

Figure 34. TPL0102 Digital Input vs OPA320 Analog Output (DAC)

8.2.3 Variable Current Sink

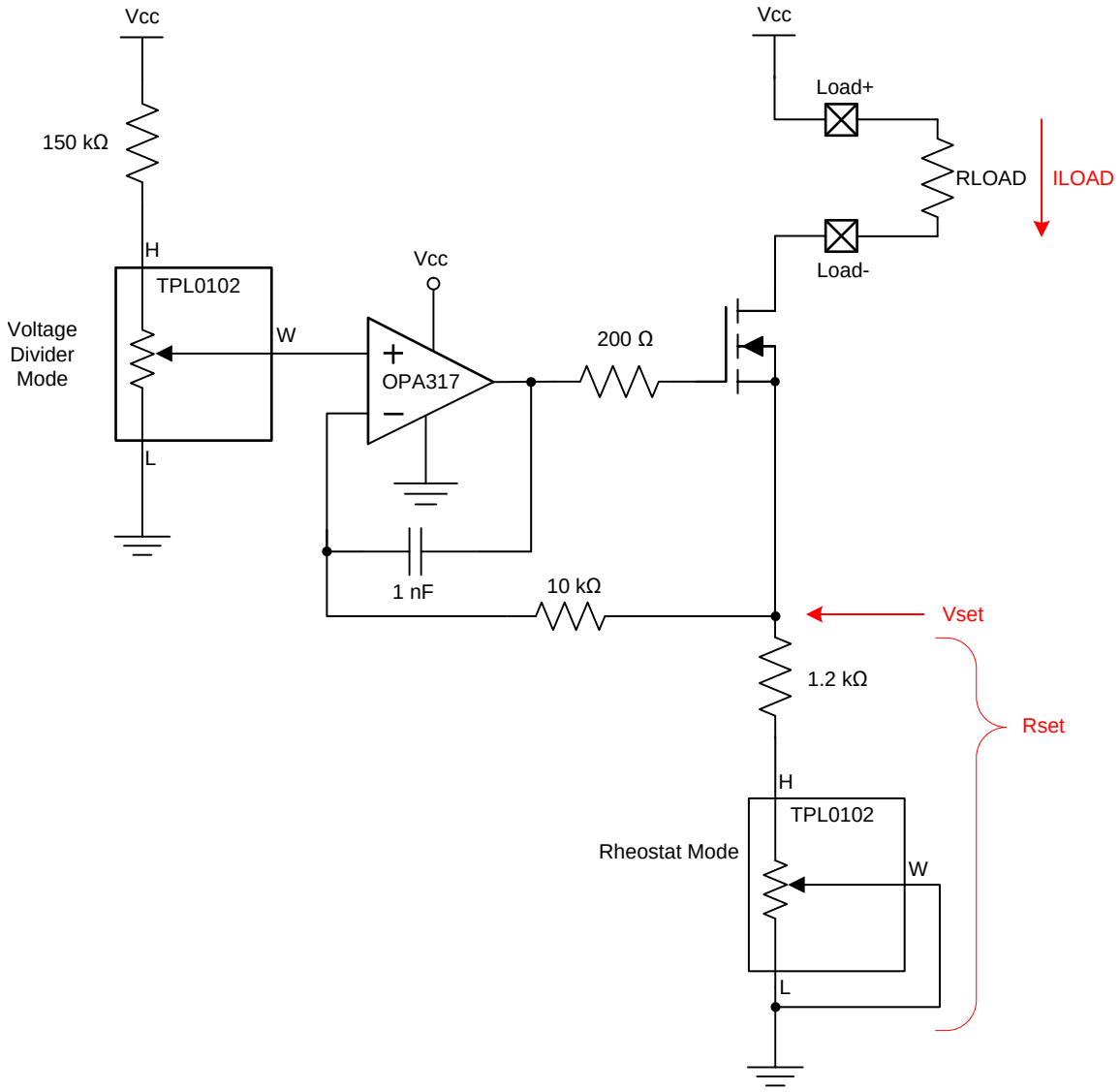

Figure 35. Variable Current Sink Schematic

8.2.3.1 Design Requirements

DESIGN PARAMETER	EXAMPLE VALUE
Load Current Range	0 µA to 1.33 mA

8.2.3.2 Detailed Design Procedure

Both potentiometers within the TPL0102 can be used with an OPA317 op amp and N-Channel MOSFET to produce a variable current sink. The first potentiometer, configured in voltage divider mode, is used to set the input voltage to the OPA317. The second potentiometer, configured in rheostat mode, is used to set the span of the current (I_{LOAD}) running through R_{LOAD}. The load current for the circuit is shown below:

$$I_{LOAD} = \frac{V_{set}}{R_{set}} \quad (13)$$

Copyright © 2011–2015, Texas Instruments Incorporated

Based upon the voltage divider formula between the setting of the TPL0102 and the 150 kΩ resistor, the voltage at the positive input of the OPA317, V_{set}, can range from 0 to 2 V. This leaves a maximum of 3 V of voltage drop from the positive side to the negative side of the external load with a 5 V supply. A 1.2 kΩ resistor is placed in series with the TPL0102 span setting potentiometer (R_{set}). At full scale of the span setting potentiometer and the maximum voltage at V_{set} (2 V), the maximum value for I_{LOAD} is:

$$I_{LOAD_MAX} = \frac{V_{set}}{R_{set}} = \frac{V_{set}}{TPL0102_{HW(Resistance)} + 1.2\ k\Omega} = \frac{2\ V}{300\ \Omega + 1.2\ k\Omega} = 1.33\ mA \quad (14)$$

When the span setting potentiometer is at zero scale with the maximum voltage at V_{set}, the maximum value for I_{LOAD} is:

$$I_{LOAD} = \frac{V_{set}}{R_{set}} = \frac{V_{set}}{TPL0102_{HW(Resistance)} + 1.2\ k\Omega} = \frac{2\ V}{100\ k\Omega + 1.2\ k\Omega} = 19.76\ \mu A \quad (15)$$

The same calculations can be made when the potentiometer in voltage divider mode is a zero scale. At zero scale, V_{set} will be almost negligible, resulting in 0 A of current no matter the value of the span setting potentiometer.

8.2.3.2.1 Compensation Components

This design requires a few compensation components to stabilize the feedback network. These include the 1 nF capacitor and the 200 Ω and 10 kΩ resistors, which were selected based upon the *TIPD102 reference design*.

8.2.3.3 Application Curves

As the TPL0102 in rheostat mode (span setting potentiometer) moves from zero-scale to full-scale, a new step (line) is created with a larger achievable maximum current. The rheostat mode potentiometer directly corresponds to R_{set} in Equation 13. The TPL0102 in voltage divider mode produces the granular current values between the minimum and maximum range. The voltage divider potentiometer directly corresponds to V_{set} in Equation 13. For example, when the potentiometer in rheostat mode is at code 256, the potentiometer in voltage divider mode produces a theoretical maximum current of 1.33 mA at code 256 and a minimum current of 0 µA at code 0.

The current sink does not reach the full 1.33 mA because of the error in resistance of the span setting potentiometer. At full-scale, the resistor had an actual resistance of 480 Ω.

$$I_{LOAD_MAX} = \frac{V_{set}}{R_{set}} = \frac{V_{set}}{TPL0102_{HW(Resistance)} + 1.2\ k\Omega} = \frac{2\ V}{480\ \Omega + 1.2\ k\Omega} = 1.19\ mA \quad (16)$$

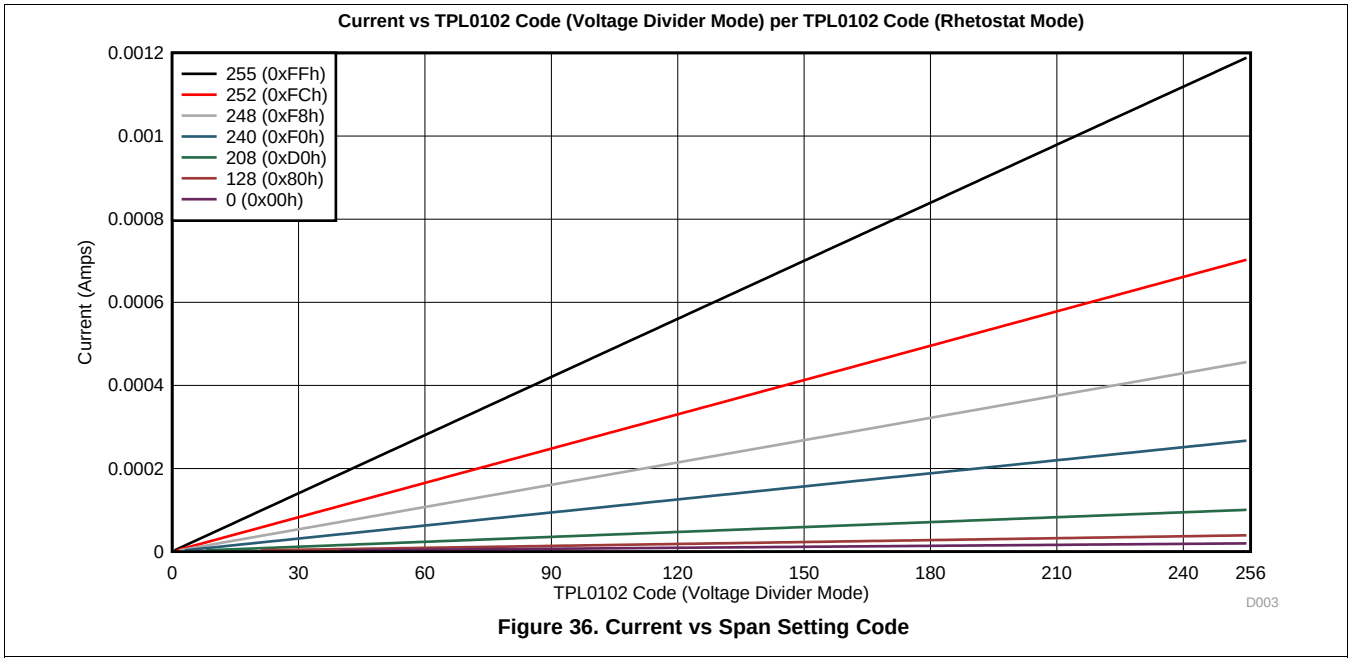

Figure 36. Current vs Span Setting Code

9 Power Supply Recommendations

9.1 Power Sequence

Protection diodes limit the voltage compliance at terminal H, terminal L, and terminal W, making it important to power up V_{DD} first before applying any voltage to terminal H, terminal L, and terminal W. The diodes are forward-biasing, meaning V_{DD} can be powered unintentionally if V_{DD} is not powered first. The ideal power-up sequence is V_{SS}, V_{DD}, V_{LOGIC}, digital inputs, and V_H, V_L, and V_W. The order of powering digital inputs, V_H, V_L, and V_W does not matter as long as they are powered after V_{SS}, V_{DD}, and V_{LOGIC}.

9.2 Wiper Position Upon Power Up

It is prudent to know that when the DPOT is powered off, the impedance of the device is not known. Upon power up, the device will go to 0x80h code for a very short period of time while it loads the stored wiper position in the EEPROM and then will go to the stored position. This happens in less than 100 uS.

9.3 Dual-Supply vs Single-Supply

Dual-supply operation allows the TPL0102 to handle voltage that may swing negative. This is especially useful for any application that involves negative voltages, such as the input to an Op Amp or audio signals. It is recommended that V_{SS} (negative supply) is mirrored with V_{DD} (positive supply) and both are centered around GND. For example, if dual-supply is desired and V_{DD} = 2.50 V, then V_{SS} should be equal to -2.50 V, which will result in GND centered between V_{DD} and V_{SS}.

Single-supply operation allows the TPL0102 to handle positive voltages only. In single-supply, it is recommended that V_{SS} is tied to GND.

Copyright © 2011–2015, Texas Instruments Incorporated

10 Layout

10.1 Layout Guidelines

To ensure reliability of the device, please follow common printed-circuit board layout guidelines.

- Leads to the input should be as direct as possible with a minimum conductor length.
- The ground path should have low resistance and low inductance.
- Short trace-lengths should be used to avoid excessive loading.
- It is common to have a dedicated ground plane on an inner layer of the board.
- Terminals that are connected to ground should have a low-impedance path to the ground plane in the form of wide polygon pours and multiple vias.
- Bypass capacitors should be used on power supplies and should be placed as close as possible to the VDD and VSS pins.
- Apply low equivalent series resistance 0.1 µF to 10 µF tantalum or electrolytic capacitors at the supplies to minimize transient disturbances and to filter low frequency ripple.
- To reduce the total I^2C bus capacitance added by PCB parasitics, data lines (SCL and SDA) should be a short as possible and the widths of the traces should also be minimized (e.g. 5-10 mils depending on copper weight).

10.2 Layout Example

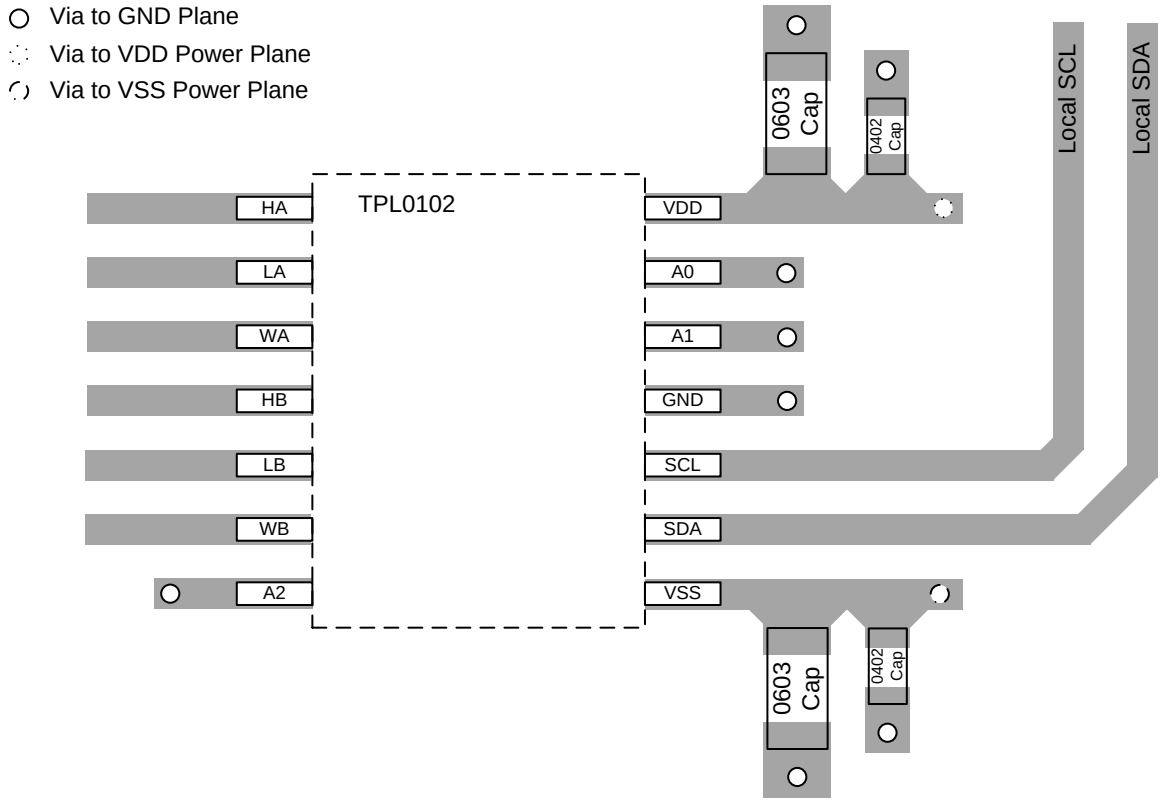

Figure 37. TPL0102 Layout Example

11 Device and Documentation Support

11.1 Community Resources

The following links connect to TI community resources. Linked contents are provided "AS IS" by the respective contributors. They do not constitute TI specifications and do not necessarily reflect TI's views; see TI's Terms of Use.

TI E2E™ Online Community ***TI's Engineer-to-Engineer (E2E) Community.*** Created to foster collaboration among engineers. At e2e.ti.com, you can ask questions, share knowledge, explore ideas and help solve problems with fellow engineers.

Design Support ***TI's Design Support*** Quickly find helpful E2E forums along with design support tools and contact information for technical support.

11.2 Trademarks

E2E is a trademark of Texas Instruments.
All other trademarks are the property of their respective owners.

11.3 Electrostatic Discharge Caution



These devices have limited built-in ESD protection. The leads should be shorted together or the device placed in conductive foam during storage or handling to prevent electrostatic damage to the MOS gates.

11.4 Glossary

SLYZ022 — *TI Glossary*.

This glossary lists and explains terms, acronyms, and definitions.

12 Mechanical, Packaging, and Orderable Information

The following pages include mechanical, packaging, and orderable information. This information is the most current data available for the designated devices. This data is subject to change without notice and revision of this document. For browser-based versions of this data sheet, refer to the left-hand navigation.

Copyright © 2011–2015, Texas Instruments Incorporated

PACKAGING INFORMATION

Orderable part number	Status (1)	Material type (2)	Package | Pins	Package qty | Carrier	RoHS (3)	Lead finish/ Ball material (4)	MSL rating/ Peak reflow (5)	Op temp (°C)	Part marking (6)
TPL0102-100PWR	Active	Production	TSSOP (PW) | 14	2000 | LARGE T&R	Yes	NIPDAU	Level-1-260C-UNLIM	-40 to 85	EL-100
TPL0102-100PWR.B	Active	Production	TSSOP (PW) | 14	2000 | LARGE T&R	Yes	NIPDAU	Level-1-260C-UNLIM	-40 to 85	EL-100
TPL0102-100PWRG4	Active	Production	TSSOP (PW) | 14	2000 | LARGE T&R	Yes	NIPDAU	Level-1-260C-UNLIM	-40 to 85	EL-100
TPL0102-100PWRG4.B	Active	Production	TSSOP (PW) | 14	2000 | LARGE T&R	Yes	NIPDAU	Level-1-260C-UNLIM	-40 to 85	EL-100
TPL0102-100RUCR	Active	Production	QFN (RUC) | 14	3000 | LARGE T&R	Yes	NIPDAUAG	Level-1-260C-UNLIM	-40 to 85	6NH
TPL0102-100RUCR.B	Active	Production	QFN (RUC) | 14	3000 | LARGE T&R	Yes	NIPDAUAG	Level-1-260C-UNLIM	-40 to 85	6NH

(1) **Status:** For more details on status, see our product life cycle.

(2) **Material type:** When designated, preproduction parts are prototypes/experimental devices, and are not yet approved or released for full production. Testing and final process, including without limitation quality assurance, reliability performance testing, and/or process qualification, may not yet be complete, and this item is subject to further changes or possible discontinuation. If available for ordering, purchases will be subject to an additional waiver at checkout, and are intended for early internal evaluation purposes only. These items are sold without warranties of any kind.

(3) **RoHS values:** Yes, No, RoHS Exempt. See the TI RoHS Statement for additional information and value definition.

(4) **Lead finish/Ball material:** Parts may have multiple material finish options. Finish options are separated by a vertical ruled line. Lead finish/Ball material values may wrap to two lines if the finish value exceeds the maximum column width.

(5) **MSL rating/Peak reflow:** The moisture sensitivity level ratings and peak solder (reflow) temperatures. In the event that a part has multiple moisture sensitivity ratings, only the lowest level per JEDEC standards is shown. Refer to the shipping label for the actual reflow temperature that will be used to mount the part to the printed circuit board.

(6) **Part marking:** There may be an additional marking, which relates to the logo, the lot trace code information, or the environmental category of the part.

Multiple part markings will be inside parentheses. Only one part marking contained in parentheses and separated by a "~" will appear on a part. If a line is indented then it is a continuation of the previous line and the two combined represent the entire part marking for that device.

Important Information and Disclaimer: The information provided on this page represents TI's knowledge and belief as of the date that it is provided. TI bases its knowledge and belief on information provided by third parties, and makes no representation or warranty as to the accuracy of such information. Efforts are underway to better integrate information from third parties. TI has taken and continues to take reasonable steps to provide representative and accurate information but may not have conducted destructive testing or chemical analysis on incoming materials and chemicals. TI and TI suppliers consider certain information to be proprietary, and thus CAS numbers and other limited information may not be available for release.

In no event shall TI's liability arising out of such information exceed the total purchase price of the TI part(s) at issue in this document sold by TI to Customer on an annual basis.

OTHER QUALIFIED VERSIONS OF TPL0102-100 :

- Enhanced Product : TPL0102-EP

NOTE: Qualified Version Definitions:

- Enhanced Product - Supports Defense, Aerospace and Medical Applications

TAPE AND REEL INFORMATION

REEL DIMENSIONS

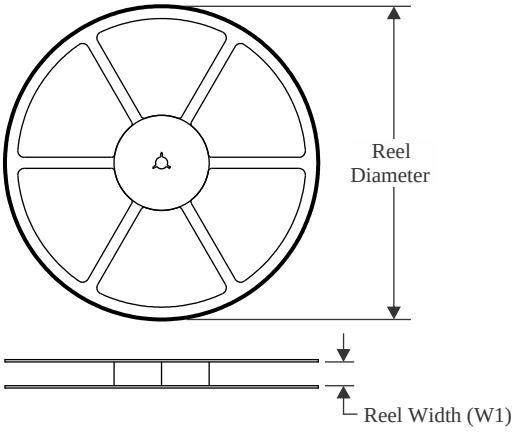

TAPE DIMENSIONS

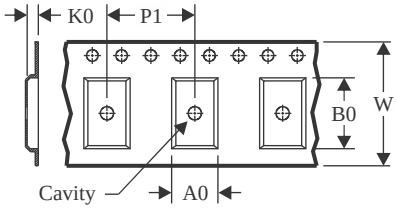

A0	Dimension designed to accommodate the component width
B0	Dimension designed to accommodate the component length
K0	Dimension designed to accommodate the component thickness
W	Overall width of the carrier tape
P1	Pitch between successive cavity centers

QUADRANT ASSIGNMENTS FOR PIN 1 ORIENTATION IN TAPE

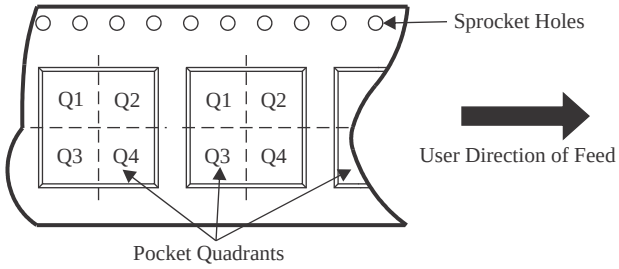

*All dimensions are nominal

Device	Package Type	Package Drawing	Pins	SPQ	Reel Diameter (mm)	Reel Width W1 (mm)	A0 (mm)	B0 (mm)	K0 (mm)	P1 (mm)	W (mm)	Pin1 Quadrant
TPL0102-100PWR	TSSOP	PW	14	2000	330.0	12.4	6.9	5.6	1.6	8.0	12.0	Q1
TPL0102-100PWRG4	TSSOP	PW	14	2000	330.0	12.4	6.9	5.6	1.6	8.0	12.0	Q1
TPL0102-100RUCR	QFN	RUC	14	3000	180.0	8.4	2.3	2.3	0.55	4.0	8.0	Q2

TAPE AND REEL BOX DIMENSIONS

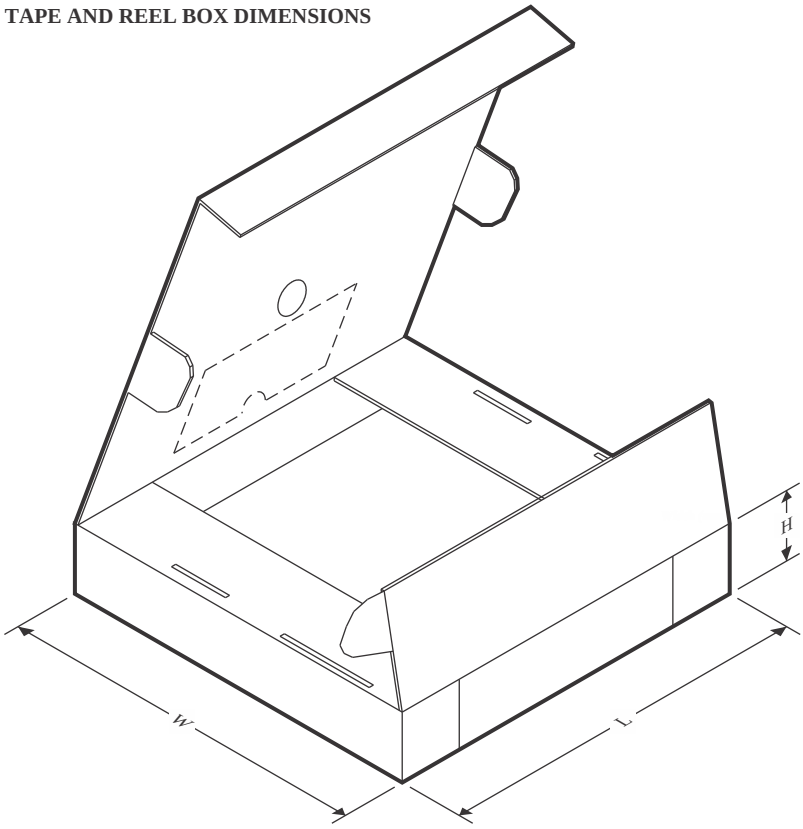

*All dimensions are nominal

Device	Package Type	Package Drawing	Pins	SPQ	Length (mm)	Width (mm)	Height (mm)
TPL0102-100PWR	TSSOP	PW	14	2000	353.0	353.0	32.0
TPL0102-100PWRG4	TSSOP	PW	14	2000	353.0	353.0	32.0
TPL0102-100RUCR	QFN	RUC	14	3000	202.0	201.0	28.0

PACKAGE OUTLINE

PW0014A

TSSOP - 1.2 mm max height

SMALL OUTLINE PACKAGE

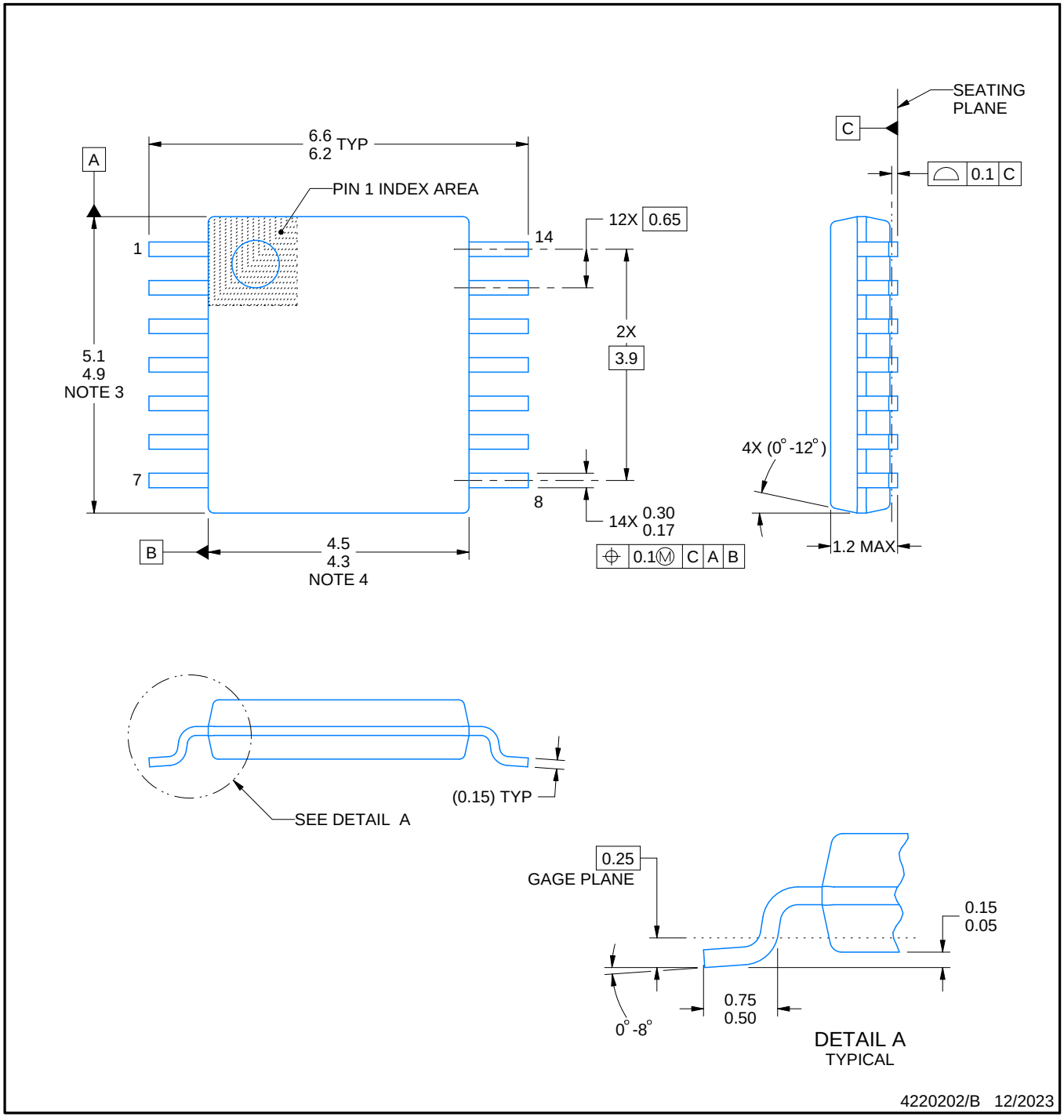

NOTES:

1. All linear dimensions are in millimeters. Any dimensions in parenthesis are for reference only. Dimensioning and tolerancing per ASME Y14.5M.
2. This drawing is subject to change without notice.
3. This dimension does not include mold flash, protrusions, or gate burrs. Mold flash, protrusions, or gate burrs shall not exceed 0.15 mm per side.
4. This dimension does not include interlead flash. Interlead flash shall not exceed 0.25 mm per side.
5. Reference JEDEC registration MO-153.

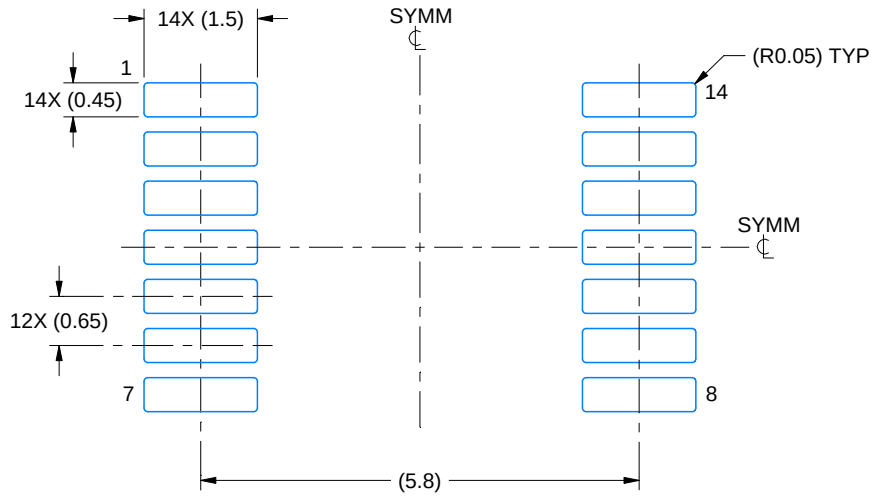

LAND PATTERN EXAMPLE
EXPOSED METAL SHOWN
SCALE: 10X

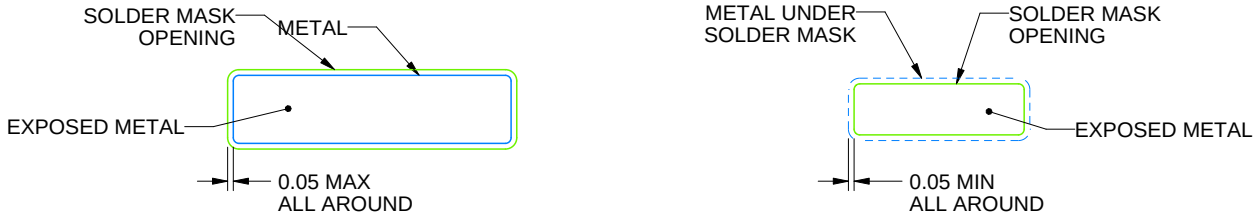

SOLDER MASK DETAILS

4220202/B 12/2023

NOTES: (continued)

6. Publication IPC-7351 may have alternate designs.
7. Solder mask tolerances between and around signal pads can vary based on board fabrication site.

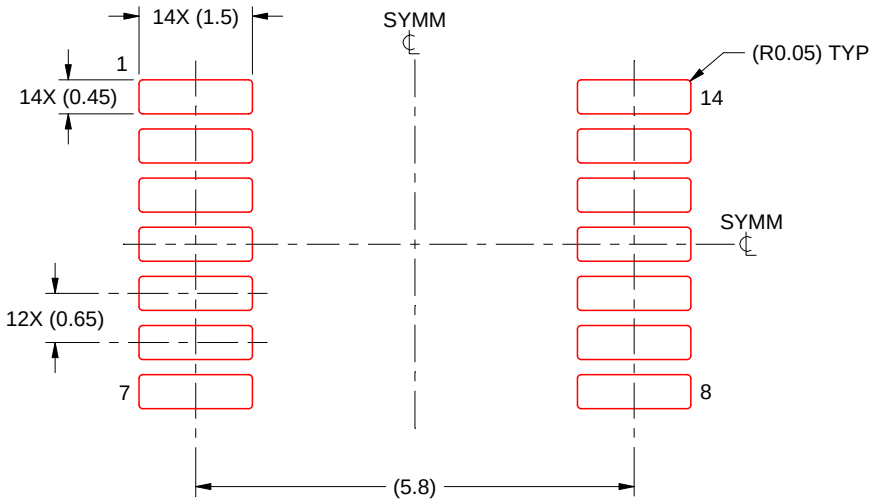

SOLDER PASTE EXAMPLE
BASED ON 0.125 mm THICK STENCIL
SCALE: 10X

4220202/B 12/2023

NOTES: (continued)

8. Laser cutting apertures with trapezoidal walls and rounded corners may offer better paste release. IPC-7525 may have alternate design recommendations.
9. Board assembly site may have different recommendations for stencil design.

GENERIC PACKAGE VIEW

RUC 14

X2QFN - 0.4 mm max height

2 x 2, 0.4 mm pitch

PLASTIC QUAD FLATPACK - NO LEAD

This image is a representation of the package family, actual package may vary.
Refer to the product data sheet for package details.

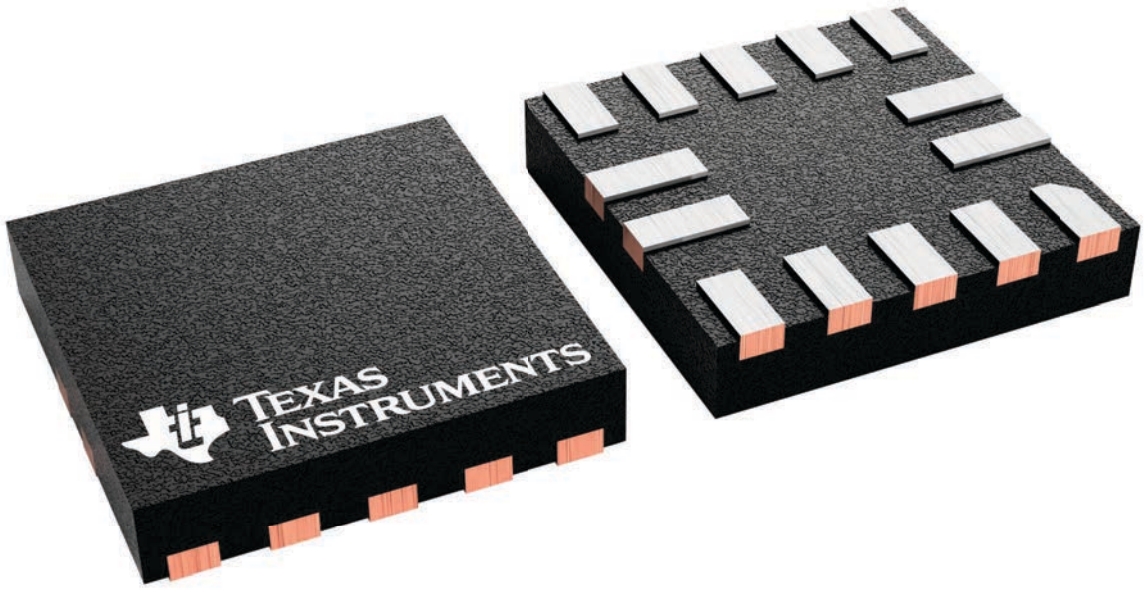

PACKAGE OUTLINE

RUC0014A

X2QFN - 0.4 mm max height

PLASTIC QUAD FLAT PACK- NO LEAD

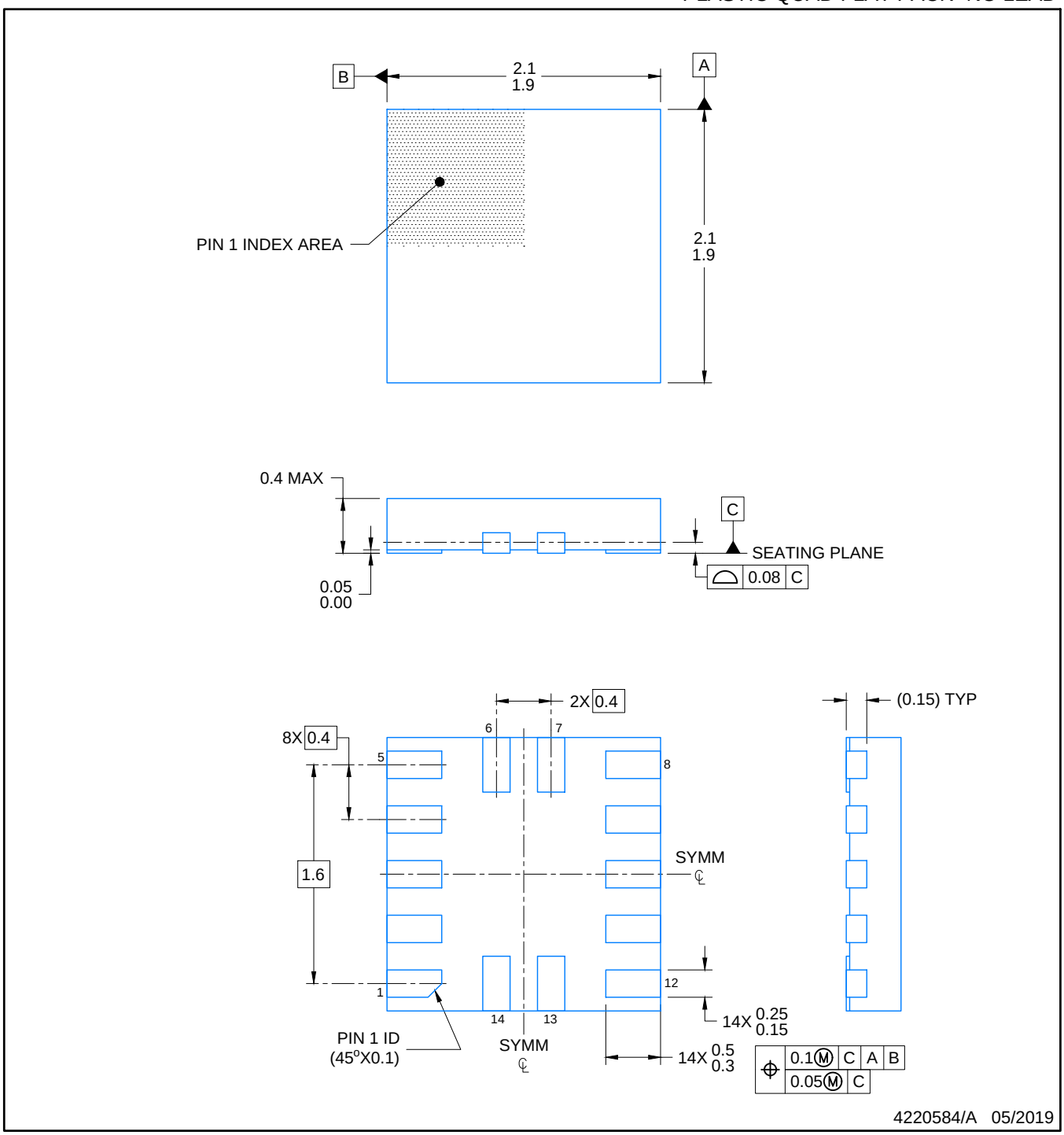

NOTES:

1. All linear dimensions are in millimeters. Any dimensions in parenthesis are for reference only. Dimensioning and tolerancing per ASME Y14.5M.
2. This drawing is subject to change without notice.

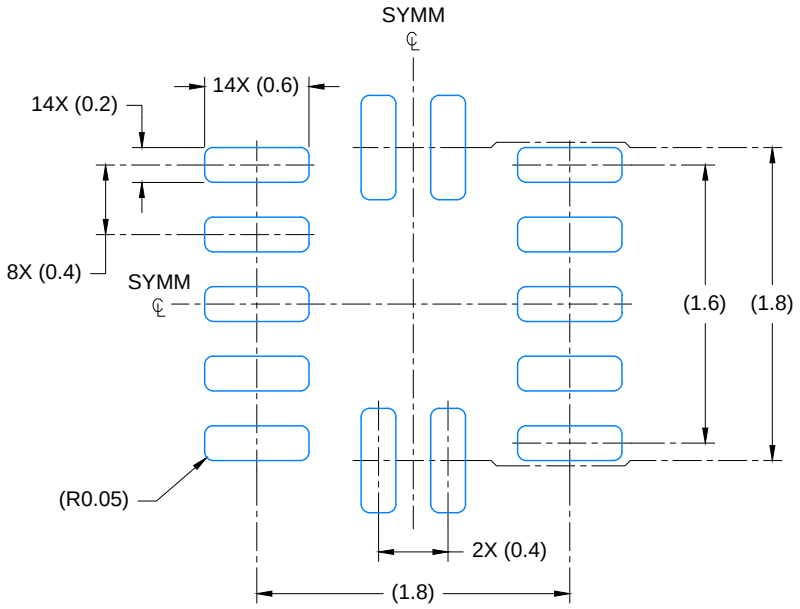

LAND PATTERN EXAMPLE
EXPOSED METAL SHOWN
SCALE: 23X

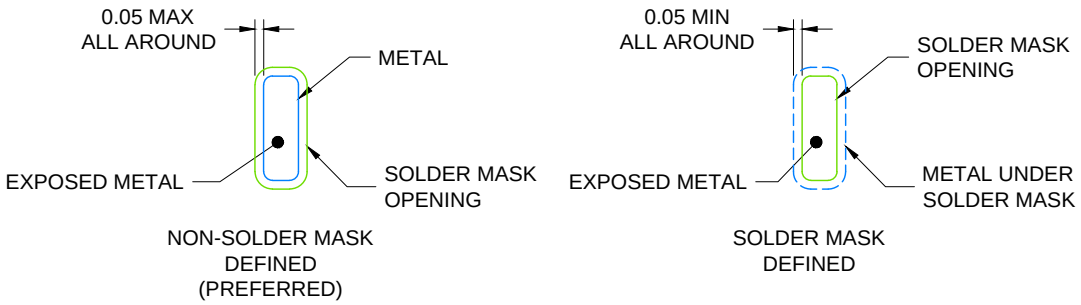

SOLDER MASK DETAILS

4220584/A 05/2019

NOTES: (continued)

3. For more information, see Texas Instruments literature number SLUA271 (www.ti.com/lit/slua271).

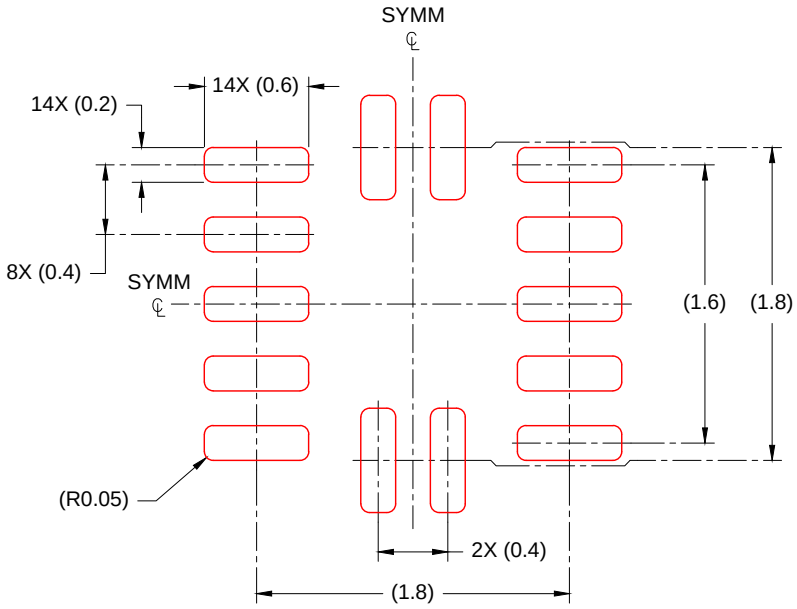

SOLDER PASTE EXAMPLE
BASED ON 0.100mm THICK STENCIL
SCALE: 23X

4220584/A 05/2019

NOTES: (continued)

4. Laser cutting apertures with trapezoidal walls and rounded corners may offer better paste release. IPC-7525 may have alternate design recommendations.

IMPORTANT NOTICE AND DISCLAIMER

TI PROVIDES TECHNICAL AND RELIABILITY DATA (INCLUDING DATASHEETS), DESIGN RESOURCES (INCLUDING REFERENCE DESIGNS), APPLICATION OR OTHER DESIGN ADVICE, WEB TOOLS, SAFETY INFORMATION, AND OTHER RESOURCES “AS IS” AND WITH ALL FAULTS, AND DISCLAIMS ALL WARRANTIES, EXPRESS AND IMPLIED, INCLUDING WITHOUT LIMITATION ANY IMPLIED WARRANTIES OF MERCHANTABILITY, FITNESS FOR A PARTICULAR PURPOSE OR NON-INFRINGEMENT OF THIRD PARTY INTELLECTUAL PROPERTY RIGHTS.

These resources are intended for skilled developers designing with TI products. You are solely responsible for (1) selecting the appropriate TI products for your application, (2) designing, validating and testing your application, and (3) ensuring your application meets applicable standards, and any other safety, security, regulatory or other requirements.

These resources are subject to change without notice. TI grants you permission to use these resources only for development of an application that uses the TI products described in the resource. Other reproduction and display of these resources is prohibited. No license is granted to any other TI intellectual property right or to any third party intellectual property right. TI disclaims responsibility for, and you fully indemnify TI and its representatives against any claims, damages, costs, losses, and liabilities arising out of your use of these resources.

TI’s products are provided subject to TI’s Terms of Sale, TI’s General Quality Guidelines, or other applicable terms available either on ti.com or provided in conjunction with such TI products. TI’s provision of these resources does not expand or otherwise alter TI’s applicable warranties or warranty disclaimers for TI products. Unless TI explicitly designates a product as custom or customer-specified, TI products are standard, catalog, general purpose devices.

TI objects to and rejects any additional or different terms you may propose.

Copyright © 2025, Texas Instruments Incorporated

Last updated 10/2025