TRACO POWER

AC/DC Medical Power Supply

TPP 40 Series, 40 Watt

- **Enclosed power supply with screw terminal connection**
- **Certification according to IEC/EN/ES 60601-1 edition 3.2 for 2 x MOPP**
- **Low leakage current <75 µA rated for BF applications**
- **Risk management process according to ISO 14971 incl. risk management file**
- **Acceptance criteria for electronic assemblies acc. to IPC-A-610 Level 3**
- **EMC compliance to IEC 60601-1-2 ed. 4**
- **Protection class I and II prepared**
- **Operating up to 5000 m altitude**
- **Ready to meet ErP directive, <0.15 W no load power consumption**
- **5-year product warranty**



ES 60601-1 IEC 60601-1
UL 62368-1 IEC 62368-1

The TPP 40 Series of 40 Watt AC/DC power supplies feature a reinforced double I/O isolation system according to latest medical safety standards IEC/EN/ES 60601-1 edition 3.2 for 2 x MOPP up to 5000 m altitude. The leakage current is below 75 µA what makes the units suitable for BF (body floating) applications.
The excellent efficiency of up to 92% allows a high power density for the standard 2.38" x 3.53" packaging format. The full load operating temperature range is –40°C to +70°C while it goes up to 85°C with 50% load derating. The EMC characteristic complies to IEC 60601-1-2 ed.4 and is dedicated for applications in industrial and domestic fields. High reliability is provided by use of industrial quality grade components and an excellent thermal management. It makes the products an ideal solution for medical devices and for demanding safety and space critical applications.

Models

Order Code	Output Power	Output 1		Output 2		Output 3		Efficiency
		Vnom	Imax	Vnom	Imax	Vnom	Imax	typ.
TPP 40-105	40 W	5 VDC	8'000 mA					90 %
TPP 40-112		12 VDC	3'340 mA					92 %
TPP 40-115		15 VDC	2'670 mA					92 %
TPP 40-124		24 VDC	1'670 mA					92 %
TPP 40-221		+12 VDC	3'340 mA	+5 VDC	6'000 mA			89 %
TPP 40-231		+15 VDC	2'670 mA	+5 VDC	6'000 mA			89 %
TPP 40-251		+24 VDC	1'670 mA	+5 VDC	6'000 mA			86 %
TPP 40-321M2		+12 VDC	3'340 mA	+5 VDC	6'000 mA	–12 VDC	500 mA	88 %
TPP 40-331M3		+15 VDC	2'670 mA	+5 VDC	6'000 mA	–15 VDC	500 mA	88 %
TPP 40-3512		+24 VDC	1'670 mA	+5 VDC	6'000 mA	+12 VDC	500 mA	86 %

Note - Total output power must not exceed 40 W.
- Other output models are available on request.

Input Specifications

Input Voltage	- AC Range	Operational Range:	**85 - 264 VAC** (Full Range)
		Rated Range:	**100 - 240 VAC** (Full Range)
	- DC Range	Operational Range:	**120 - 370 VDC** (Designed for, no certification)
		Polarity:	**+DC: L / –DC: N**
Input Frequency		Operational Range:	**47 - 440 Hz**
		Certified:	**50/60 Hz**
Power Consumption	- No load & Vin = 230 VAC		**150 mW max.** (Ready to meet ErP directive)
	- No load & Vin = 115 VAC		**150 mW max.**
Input Current	- Full load & Vin = 230 VAC	single output models:	**500 mA max.**
		dual output models:	**550 mA max.**
		tripleoutput models:	**550 mA max.**
	- Full load & Vin = 115 VAC	single output models:	**1'000 mA max.**
		dual output models:	**1'050 mA max.**
		triple output models:	**1'050 mA max.**
Input Inrush Current	- At 230 VAC		**60 A max.**
	- At 115 VAC		**35 A max.**
Input Protection			**T 3.15 A / 250 VAC** (Internal Fuse in L & N)
Recommended Input Fuse			(The need of an external fuse has to be assessed in the final application.)

Output Specifications

Output Voltage Adjustment			**±10%** (Vout 1 only) (By trim potentiometer) Output power must not exceed rated power!
Voltage Set Accuracy			**±1% max.** (Output 1) **±2% max.** (Output 2 and 3)
Regulation	- Input Variation (Vmin - Vmax)	single output models:	**0.2% max.**
		dual output models:	**0.2% max.**
		triple output models:	**0.2% max.**
	- Load Variation (0 - 100%)	single output models:	**0.7% max.** (5 VDC model) **0.5% max.** (other output models)
		dual output models:	**0.5% max.** (Output 1) **1.5% max.** (Output 2)
		triple output models:	**0.5% max.** (Output 1) **1.5% max.** (Output 2) **0.7% max.** (Output 3)
	- Cross Regulation (25% / 100% asym. load)	dual output models:	**1.5% max.**
		triple output models:	**1.5% max.**
Ripple and Noise (20 MHz Bandwidth)	- single output	5 VDC model:	**75 mVp-p typ.** (w/ 10 µF X7R)
		12 VDC model:	**75 mVp-p typ.** (w/ 10 µF X7R)
		15 VDC model:	**75 mVp-p typ.** (w/ 10 µF X7R)
		24 VDC model:	**75 mVp-p typ.** (w/ 1 µF X7R)
	- dual output	12 / 5 VDC model:	**120 / 100 mVp-p typ.** (w/ 10 µF X7R)
		15 / 5 VDC model:	**150 / 100 mVp-p typ.** (w/ 10 µF X7R)
		24 / 5 VDC model:	**240 / 100 mVp-p typ.** (w/ 10 µF X7R)
	- triple output	12 / 5 / -12 VDC model:	**120 / 100 / 120 mVp-p typ.** (w/ 10 µF X7R)
		15 / 5 / -15 VDC model:	**150 / 100 / 150 mVp-p typ.** (w/ 10 µF X7R)
		24 / 5 / 12 VDC model:	**240 / 100 / 120 mVp-p typ.** (w/ 10 µF X7R)

All specifications valid at 230 VAC, resistive full load and +25°C after warm-up time, unless otherwise stated.

Capacitive Load	- single output	5 VDC model:	16'000 µF max.
		12 VDC model:	2'785 µF max.
		15 VDC model:	1'780 µF max.
		24 VDC model:	700 µF max.
	- dual output	12 / 5 VDC model:	1'750 / 2'000 µF max.
		15 / 5 VDC model:	1'670 / 2'000 µF max.
		24 / 5 VDC model:	440 / 2'000 µF max.
	- triple output	12 / 5 / -12 VDC model:	1'750 / 2'000 / 420 µF max.
		15 / 5 / -15 VDC model:	1'670 / 2'000 / 420 µF max.
		24 / 5 / 12 VDC model:	440 / 2'000 / 420 µF max.
Minimum Load			Not required (0.5 W for Vout1 and Vout2 if Vout3 = Full Load)
Temperature Coefficient			±0.02 %/K max.
Hold-up Time	- At 115 VAC		25 ms min.
Start-up Time	- At 230 VAC		1'000 ms max.
Short Circuit Protection			Continuous, Automatic recovery
Output Current Limitation			115 - 180% of Iout max. (Pout 1 + Pout 2) 145% typ. of Iout max. (Pout 1 + Pout 2)
Overvoltage Protection			125 - 140% of Vout nom. (only Output 1)
Transient Response	- Response Deviation		3% max. (50% to 75% Load Step)
	- Response Time		600 µs typ. (50% to 75% Load Step) (Only Output 1)

Safety Specifications

Standards	- IT / Multimedia Equipment		EN 62368-1 IEC 62368-1 UL 62368-1
	- Medical Equipment		EN 60601-1 IEC 60601-1 ANSI/AAMI ES 60601-1 2 x MOPP (Means Of Patient Protection)
	- Certification Documents		www.tracopower.com/tpp40-safety-cert
Protection Class			Class I & II (Prepared): Reinforced Insulation
		See application note:	www.tracopower.com/info/protection-class.pdf
Energy Source	- Output, acc. to 62368-1		ES1
Power Source	- Output, acc. to 62368-1		PS3
Pollution Degree			PD 2
Over Voltage Category			OVC II

EMC Specifications

EMI (Emissions)		EN 60601-1-2 edition 4 (Medical Devices)
	- Conducted Emissions	EN 55011 class A (internal filter) EN 55011 class B (internal filter) EN 55032 class A (internal filter) EN 55032 class B (internal filter) FCC 47 Part 18 class A (internal filter) FCC 47 Part 18 class B (internal filter)
	- Radiated Emissions	EN 55011 class A (internal filter) EN 55011 class B (internal filter) EN 55032 class A (internal filter) EN 55032 class B (internal filter) FCC 47 Part 18 class A (internal filter) FCC 47 Part 18 class B (internal filter)
	- Harmonic Current Emissions	EN 61000-3-2, class A
	- Voltage Fluctuations & Flicker	EN 61000-3-3

All specifications valid at 230 VAC, resistive full load and +25°C after warm-up time, unless otherwise stated.

EMS (Immunity)			EN 60601-1-2 edition 4 (Medical Devices)
	- Electrostatic Discharge	Air:	EN 61000-4-2, ±15 kV, perf. criteria A
		Contact:	EN 61000-4-2, ±8 kV, perf. criteria A
	- RF Electromagnetic Field		EN 61000-4-3, 20 V/m, perf. criteria A
	- EFT (Burst) / Surge		EN 61000-4-4, ±2 kV, perf. criteria A
		L to L:	EN 61000-4-5, ±1 kV, perf. criteria A
	- Conducted RF Disturbances		EN 61000-4-6, 20 Vrms, perf. criteria A
	- PF Magnetic Field	Continuous:	EN 61000-4-8, 30 A/m, perf. criteria A
	- Voltage Dips & Interruptions	230 VAC / 50 Hz:	EN 61000-4-11 30%, 25 periods, perf. criteria A >95%, 0.5 periods, perf. criteria A >95%, 1 period, perf. criteria A >95%, 250 periods, perf. criteria B
		115 VAC / 60 Hz:	EN 61000-4-11 30%, 25 periods, perf. criteria A >95%, 0.5 periods, perf. criteria A >95%, 1 period, perf. criteria A >95%, 250 periods, perf. criteria B
EMC / Environmental	- Certification Documents		www.tracopower.com/tpp40-emc-cert

General Specifications

Relative Humidity			95% max. (non condensing)
Temperature Ranges	- Operating Temperature		–40°C to +85°C
	- Storage Temperature		–40°C to +85°C
Power Derating	- High Temperature		Depending on model
	- Low Input Voltage		Depending on model
		See application note:	www.tracopower.com/tpp40-cc
Cooling System			Natural convection (20 LFM)
Altitude During Operation			5'000 m max.
Regulator Topology			Flyback Converter
Switching Frequency			50 - 140 kHz (PWM) (Output 1) 750 kHz typ. (PWM) (Output 2) 510 kHz typ. (PWM) (Output 3)
Insulation System			Reinforced Insulation
Working Voltage (rated)			258 VAC
Isolation Test Voltage	- Input to Output, 60 s		4'000 VAC
	- Input to Case or PE, 60 s		2'500 VAC
	- Output to Case or PE, 60 s		2'500 VAC
Creepage	- Input to Output		8 mm min.
Clearance	- Input to Output		8 mm min.
Isolation Resistance	- Input to Output, 500 VDC		100 MΩ min.
Leakage Current (at 264 VAC)	- Touch Current		75 µA max.
Reliability	- Calculated MTBF		3'000'000 h (for single output models) 1'700'000 h (for multi output models) (MIL-HDBK-217F, ground benign)
Environment	- Vibration		IEC 60068-2-6 5 g, 3 axis, sine sweep, 5-500 Hz, 1 oct/min
	- Mechanical Shock		IEC 60068-2-27 50 g, 3 axis, half sine, 11 ms
Housing Material			Aluminum
Housing Type			Metal Case
Mounting Type			Chassis Mount
Connection Type			Screw Terminal
Weight	- single output		169 g
	- dual output		216 g
	- triple output		216 g

All specifications valid at 230 VAC, resistive full load and +25°C after warm-up time, unless otherwise stated.

Environmental Compliance	- REACH Declaration	www.tracopower.com/info/reach-declaration.pdf REACH SVHC list compliant REACH Annex XVII compliant
	- RoHS Declaration	www.tracopower.com/info/rohs-declaration.pdf Exemptions: 7(a), 7(c)-I (RoHS exemptions refer to the component concentration only, not to the overall concentration in the product (O5A rule).)
	- SCIP Reference Number	45cf137d-b509-486d-aa9d-97603cac3267

Additional Information

Supporting Documents	www.tracopower.com/overview/tpp40
Frequently Asked Questions	www.tracopower.com/glossary-faq
Glossary	www.tracopower.com/info/glossary.pdf
Service Portal	www.tracoserviceportal.com

All specifications valid at 230 VAC, resistive full load and +25°C after warm-up time, unless otherwise stated.

Outline Dimensions

Single Output Models

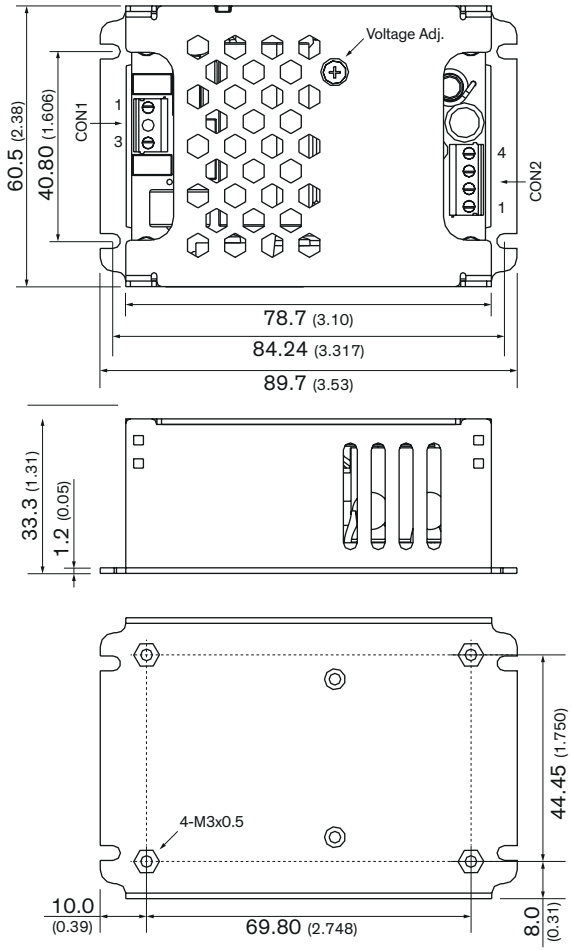

Max. corner screw penetration: 2.3 (0.09)
Max. center screw penetration: 2.0 (0.08)

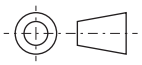

All dimensions in mm (inch)
Tolerance: X.X ±0.5 (X.XX ±0.02)
X.XX ±0.25 (X.XXX ±0.010)

Mounting screw locked torque:
max. 4.2 kgfcm / 0.41 Nm

Screw Terminal			
Input (CON1)		**Output** (CON2)	
Pin	**Function**	**Pin***	**Function**
1	Line	**1,2**	–Vout
3	Neutral	**3,4**	+Vout

* Terminal rated for 10 A max.
(at higher current connection has to be split)

CON1: Terminal Block
Max. screw locked torque 2 kgfcm / 0.2 Nm
Wire dimensio: AWG 16 max.

CON2: Terminal Block
Max. screw locked torque 2 kgfcm / 0.2 Nm
Wire dimension: 16 AWG max.

Note: The size of the wires has to be assessed in the final application.

All specifications valid at 230 VAC, resistive full load and +25°C after warm-up time, unless otherwise stated.

Multi Output Models

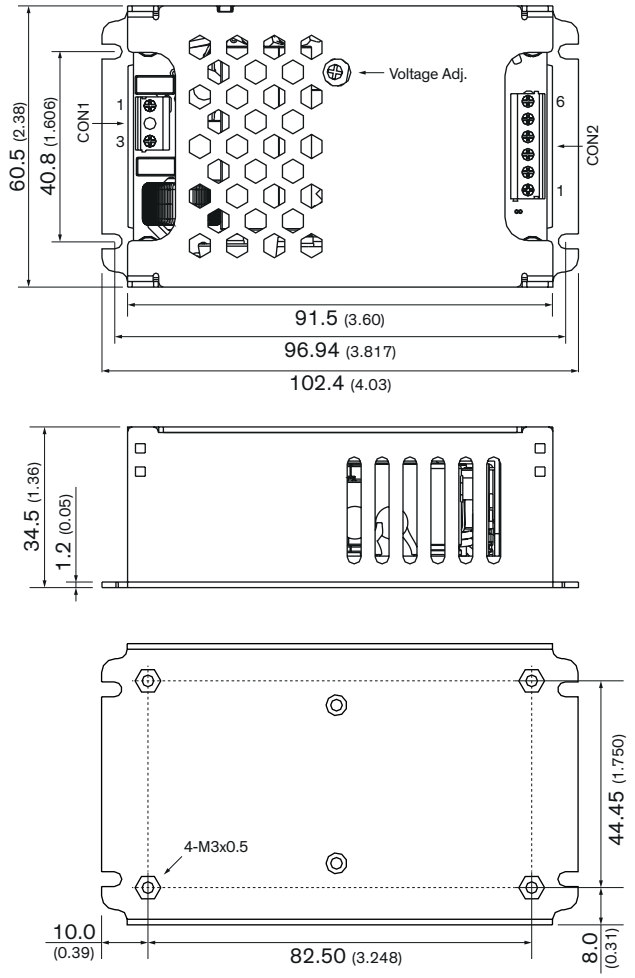

Max. corner screw penetration: 2.3 (0.09)
Max. center screw penetration: 2.0 (0.08)

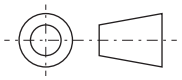

All dimensions in mm (inch)
Tolerance: X.X ±0.5 (X.XX ±0.02)
X.XX ±0.25 (X.XXX ±0.010)

Mounting screw locked torque:
max. 4.2 kgfcm / 0.41 Nm

Screw Terminal			
Input (CON1)		**Output** (CON2)	
Pin	**Function**	**Pin***	**Function**
1	Line	**1**	Vout 3**
3	Neutral	**2,3**	COM
		4,5	Vout 2
		6	Vout 1

* Terminal rated for 10 A max.
(at higher current connection has to be split)

** Not connected on dual ouput models

CON1: Terminal Block
Max. screw locked torque 2 kgfcm / 0.2 Nm
Wire dimension: AWG 16 max.

CON2: Terminal Block
Max. screw locked torque 2 kgfcm / 0.2 Nm
Wire dimension: AWG 16 max.

Note: The size of the wires has to be assessed in the final application.

© Copyright 2026 Traco Electronic AG